comer industries

GEARBOXES



The easiest way to go far in agriculture

		Applicazioni *Applications*	p.
Profilo aziendale	*Company Profile*		4
APPLICAZIONI STANDARD ***STANDARD APPLICATIONS***		(0.00)	
Gamma angolari applicazioni generiche	*Generic Application Angular Gearboxes*	 (0.01)	6
Gamma assi paralleli applicazioni generiche	*Generic Application Parallel Gearboxes*	 (0.02)	48
MACCHINE PER LA PREPARAZIONE DEL TERRENO ***MACHINERY FOR LAND PREPARATION***		(1.00)	
Trinciastocchi	*Flail Mowers*	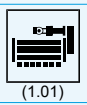 (1.01)	64
Falciadistruggierba	*Rotary Mowers*	 (1.02)	84
Decespugliatrici	*Rotary Cutters*	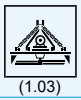 (1.03)	
Spandiletame	*Manure Spreaders*	 (1.04)	100
Decespugliatori idraulici	*Hydraulic Cutters*	 (1.05)	106
MACCHINE PER LA LAVORAZIONE DEL TERRENO **MACHINERY FOR *SOIL TILLAGE***		(2.00)	
Zappatrici - Fresatrici	*Rotary Tillers*	 (2.01)	110
Zappatrici multiple	*Multiple Rotary Tillers*	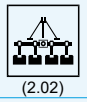 (2.02)	
Erpici rotanti	*Rotary Harrows*	 (2.03)	
Trivelle	*Post Hole Diggers*	 (2.04)	144
MACCHINE PER IL TRATTAMENDO DELLE COLTURE **MACHINERY FOR *PLANT AND CROP TREATMENT***		(3.00)	
Atomizzatori	*Sprayers*	 (3.01)	150

		Applicazioni *Applications*	p.
MACCHINE PER IL TRATTAMENDO DELLE COLTURE **MACHINERY FOR *PLANT AND CROP TREATMENT***		(3.00)	
Spandiconcime	*Fertlizer Spreaders*	 (3.02)	160
Pompe centrifughe per irrigazione	*Centrifugal Pumps for Irrigation*	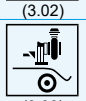 (3.03)	166
Irrigatori a bobina	*Irrigation Reels*	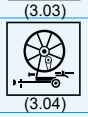 (3.04)	
MACCHINE PER FIENAGIONE ***MACHINERY FOR FORAGE AND HAY***		(4.00)	
Falciatrici rotative	*Cutter Bars*	 (4.01)	178
Giroandanatori	*Rotary Rakes*	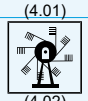 (4.02)	190
Spandifieno rotativi	*Rotary Tedders*	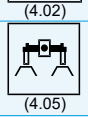 (4.05)	
Presse raccoglitrici	*Round Balers*	 (4.04)	204
MACCHINE PER LA MISCELAZIONE E DISTRIBUZIONE FORAGGIO ***MACHINERY FOR MIXING AND DISTRIBUTION OF FORAGE***		(4.00)	
Carri miscelatori	*Feed Mixer Machines*	 (4.06)	210
Lancia paglia	*Straw Blower*	 (4.09)	
MACCHINE PER TESTATE DA MAIS E CEREALI ***MACHINERY FOR CORN HEADER AND GRAIN HEADER***		(4.00)	
Punte da mais	*Corn Headers*	 (4.06)	232
Gruppi per testate da grano e girasoli	*Grain Header and Sunflower Headers*	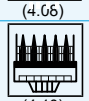 (4.10)	238
APPLICAZIONI VARIE ***MISCELLANEOS APPLICATIONS***		(5.00)	
Gruppi elettrogeni	*P.T.O. Generators*	 (5.01)	244
Seghe circolari - a nastro	*Circular Saws - Belt Saws*	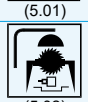 (5.02)	

IT INDICE — EN *INDEX*

		Applicazioni *Applications*	p.
MIETITREBBIA E TRINCIA SEMOVENTE ***COMBINE AND FORAGE HARVESTER***		(6.00)	
Cinematismi per mietitrebbie	*Combine Harvester Solution*	 (6.01)	256
Cinematismi per trincia semoventi	*Forage Harvester Driveline Solution*	 (6.02)	258
Cinematismi per macchine semoventi	*Self-propelled Windrower Solution*	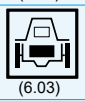 (6.03)	260
INDICE ANALITICO ***ANALYTICAL INDEX***			262

IT SIMBOLOGIA — EN *SYMBOLS*

i	Rapporto di riduzione *Reduction ratio*
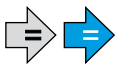	Rinvio *Gear unit 1:1 ratio*
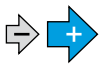	Moltiplicatore *Speed increasing unit*
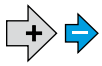	Riduttore *Speed reduction unit*
 [l]	Quantità lubrificante *Oil (or grease) quantity*
 [kg]	
	Peso *Weight*

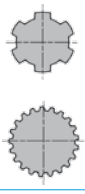	Alberi scanalati maschio *Splined male shafts*
	Albero cilindrico maschio con linguetta *Cylindrical male shaft with key*
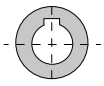	Albero cilindrico femmina con linguetta *Cylindrical female shaft with key*
	Albero cilindrico maschio con fori ortogonali *Cylindrical male shaft with cross holes*
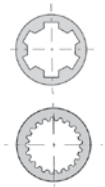	Albero scanalato femmina *Splined female shafts*
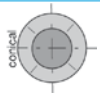	Albero conico maschio *Conical male shaft*
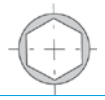	Albero esagonale femmina *Hexagonal female shaft*

Comer Industries è leader globale nelle **soluzioni di meccatronica** e nei **sistemi integrati** per la trasmissione di potenza, destinati ai **principali costruttori mondiali** di **macchine** per l'**agricoltura** e l'**industria**.

L'attività produttiva è strutturata su **cinque stabilimenti in Italia**, nelle province di Reggio Emilia, Mantova e a Matera - specializzate per linee di prodotto - e due in **Cina** (Shaoxing) e **India** (Bangalore).

Per sviluppare e testare soluzioni all'avanguardia, Comer Industries si avvale del proprio **Centro Ricerche di Meccatronica**, nato nel 1996 e dotato delle ultime tecnologie e strumenti di sperimentazione.

Gli **stabilimenti** Comer Industries nel mondo sono stati progettati secondo i principi del **World Class Manufacturing (WCM)**, una metodologia produttiva integrata di ispirazione giapponese ma sviluppata negli USA negli anni '90 che coinvolge l'intera organizzazione, dalla sicurezza all'ambiente, dalla manutenzione alla logistica e alla qualità, con l'obiettivo della sistematica riduzione degli sprechi per ottenere zero difetti, zero guasti, zero incidenti e zero scorte.

Comer Industries progetta, realizza e si propone al mercato con un'ampia gamma di **trasmissioni standard e soluzioni per la trasmissione di potenza personalizzate**, come gearboxes, driveshafts, planetary gearboxes e powertrain per applicazioni industriali e agricole.

Una completa **gamma standard di riduttori angolari e ad assi paralleli multifunzione**, adatti a varie tipologie di macchine agricole, sono soluzioni in grado di rispondere alle domande del mercato. Possono essere integrati con gli altri prodotti Comer Industries di gamma quali Powertrain, Driveshafts e Planetary Drives per formare una soluzione completa della trasmissione di potenza richiesta dall'applicazione.

Comer Industries può offrire inoltre **prodotti standard per applicazioni specifiche**, come, ad esempio, gearboxes per macchine dedicate alla preparazione e lavorazione del terreno, per la miscelazione e la distribuzione del foraggio.
Trasmissioni di potenza personalizzate possono essere prodotte per una grande varietà di applicazioni, in grado di soddisfare le necessità dei costruttori.

Comer Industries presidia i principali mercati esteri con le proprie **filiali commerciali** in Francia, Germania, Regno Unito, Stati Uniti, Brasile, Cina e India.

Comer Academy, la scuola aziendale, promuove la crescita delle **persone** attraverso programmi di formazione e attrae talenti giovani e creativi.



*Comer Industries is a global leader in **mechatronic solutions** and **integrated systems for power transmission**, supplied to **major manufacturers** of **agricultural** and **industrial machinery** worldwide.*

***Industrial operations** are structured in five plants in **Italy**, specialized by product line, plus two facilities in **China** (Shaoxing, Zhejiang) and **India** (Bangalore, Karnataka).*

*To develop and test advanced product solutions, Comer Industries relies on its **Mechatronics Research Center**, established in 1996 and equipped with the latest technologies and experimental tools.*

*Comer Industries plants worldwide have been designed following the principles of **World Class Manufacturing (WCM)**, a Japanese work-based integrated production methodology developed in the USA in the 1990s which involves the entire organization, from safety to environment, maintenance, logistics and quality. It targets the elimination of all wastes with the ultimate objective of achieving zero defects, zero accidents, zero breakdowns and zero inventory.*

*Comer Industries designs, manufactures and offers a wide product range of **standard and highly customized advanced power transmissions** such as gearboxes, driveshafts, planetary gearboxes and powertrain for agricultural and industrial applications.*

*A complete **standard product range of bevel and parallel axis gearboxes**, suitable for several agricultural equipment are solutions that meet main market demands. They can be integrated with other Comer Industries standard products from the ranges Powertrain, Driveshafts and Planetary Drives to form a complete power transmission solution as required by the specific application.*

*Comer Industries can also offer **standard products for specific applications**, such as gearboxes for land preparation, soil tillage, mixing and forage distribution machines.*
***Customized transmissions** can be produced for a wide variety of applications, in order to respond to OEM's needs.*

*The company operates in the major world markets through its own **sales subsidiaries** in France, Germany, United Kingdom, United States, Brazil, China and India.*

***Comer Academy**, the in-house management school, promotes **human resources** growth through training programs and attracts young, creative talents.*

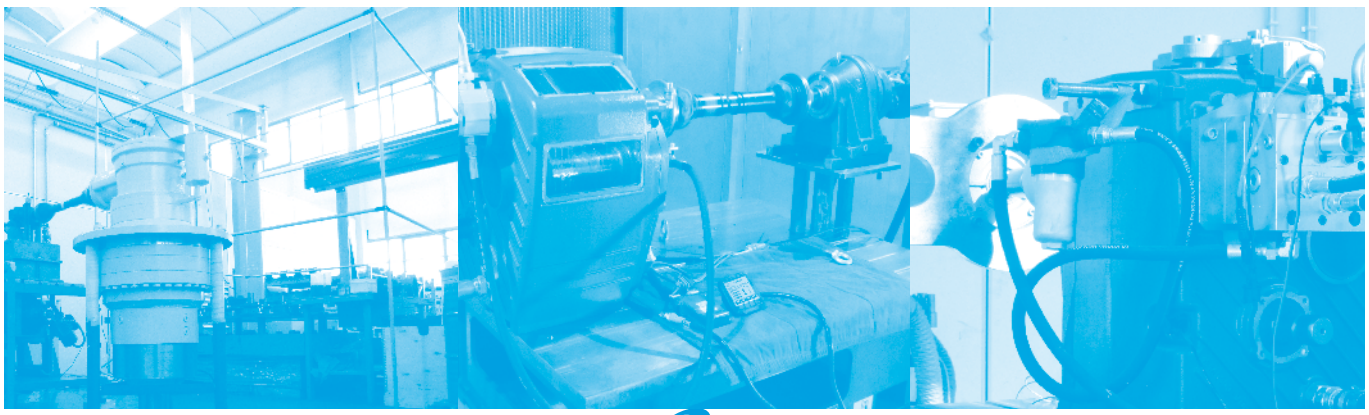

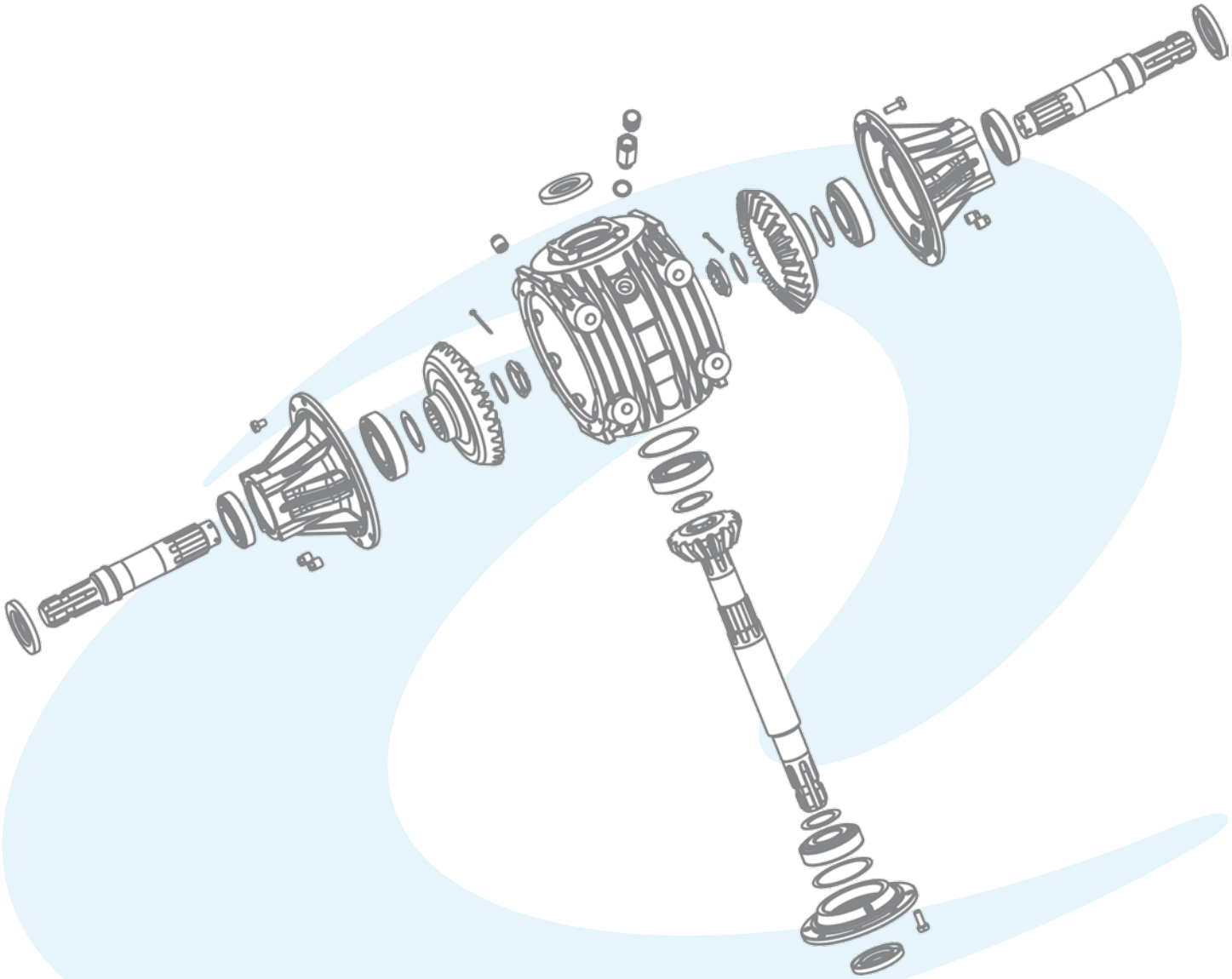

Per configurazioni non a catalogo contattare Servizio Tecnico-Commerciale
For non-catalog configurations contact Technical-Commercial Service

(0.01) Gamma angolari multifunzione
Multifunction Angular Gearboxes

RINVII ANGOLARI
ANGULAR GEARBOXES

(0.01)

	i	$P_{1\text{ - max}}$ [kW]	$M_{2\text{ - max}}$ [Nm]	Tipologia alberi disponibili *Available type of shafts*	p.
L-150J	M + - = R +	- 1.00 -	8.0	137	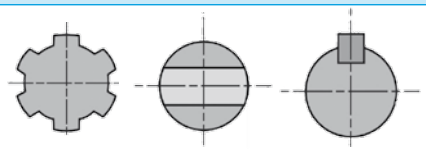	10
L-5A	M + - = R +	1.90÷3.00 1.00 1.90÷2.78	11.0	228		11
L-25A **L-25J**	M + - = R +	1.25÷3.00 1.00 1.90÷3.30	11.0	228		12
T-281A **T-281J**	M + - = R +	1.35÷2.91 1.00 1.46÷2.91	17.0	292		14
T-19	M + - = R +	1.20÷2.91 1.00 1.46÷2.91	40.4	693		16
T-27A	M + - = R +	1.35÷1.92 1.00 1.35÷1.92	40.5	850	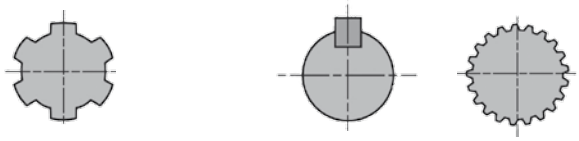	18
T-310A **T-310J**	M + - = R +	1.60÷3.00 - -	31.5	337		20
T-304A	M + - = R +	1.93÷4.50 - 1.93÷4.50	40.4	947	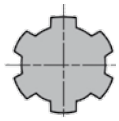	22
T-278A	M + - = R +	1.92÷2.91 1.00 1.35÷2.91	54.0	1212	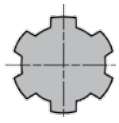	24
T-311A **T-311J**	M + - = R +	1.60÷3.00 - -	44.4	449		26

RINVII ANGOLARI
ANGULAR GEARBOXES

(0.01)

	i	$P_{1 - max}$ [kW]	$M_{2 - max}$ [Nm]	Tipologia alberi disponibili *Available type of shafts*	p.
T-312A/J	M 1.60÷3.00 - - R -	76.5	709	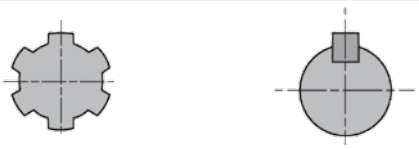	28
T-312HD	M 3.17÷3.91 - - R -	50	146	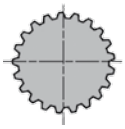	30
T-290A	M 1.46÷3.00 - 1.00 R 1.47÷3.00	69.8	1828	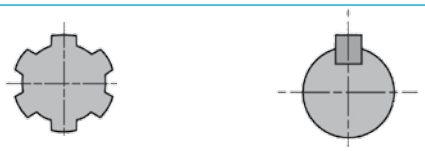	32
T-290HD	M 3.00 - - R 3.00	96	1694		34
T-292B	M 1.46÷1.86 - 1.00 R 1.47÷1.86	62.5	1576	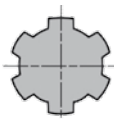	35
T-279A/J	M 1.35÷1.50 - 1.00 R 1.35	73.5	1533	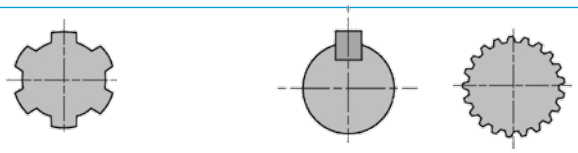	36
T-22A	M 1.60÷6.14 - - R 1.60÷6.14	72.1	2007	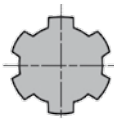	38
T-269A	M 1.35÷1.63 - 1.00 R 1.35÷1.63	77.3	1747	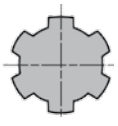	40
T-269B	M 1.42÷3.00 - 1.00 R 1.42÷3.00	77.3	2007	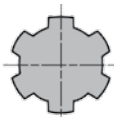	41
T-301B	M 1.35÷1.93 - 1.00 R 1.35÷3.00	152.2	7831		42

Per configurazioni non a catalogo contattare Servizio Tecnico-Commerciale
For non-catalog configurations contact Technical-Commercial Service

	i	$P_{1\text{ - max}}$ [kW]	$M_{2\text{ - max}}$ [Nm]	Tipologia alberi disponibili *Available type of shafts*	p.
T-331A	M 1.35÷3.27 - 1.00 R 1.35÷3.27	331.0	4891		44
T-332A	M 1.94 - - R 1.90÷4.25	257.8	6432	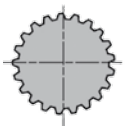	46

L-150J

Code **150.8**

(0.01)



[kg] 3.5 | [kg] 0.2

Per configurazioni non a catalogo contattare Servizio Tecnico-Commerciale
For non-catalog configurations contact Technical-Commercial Service

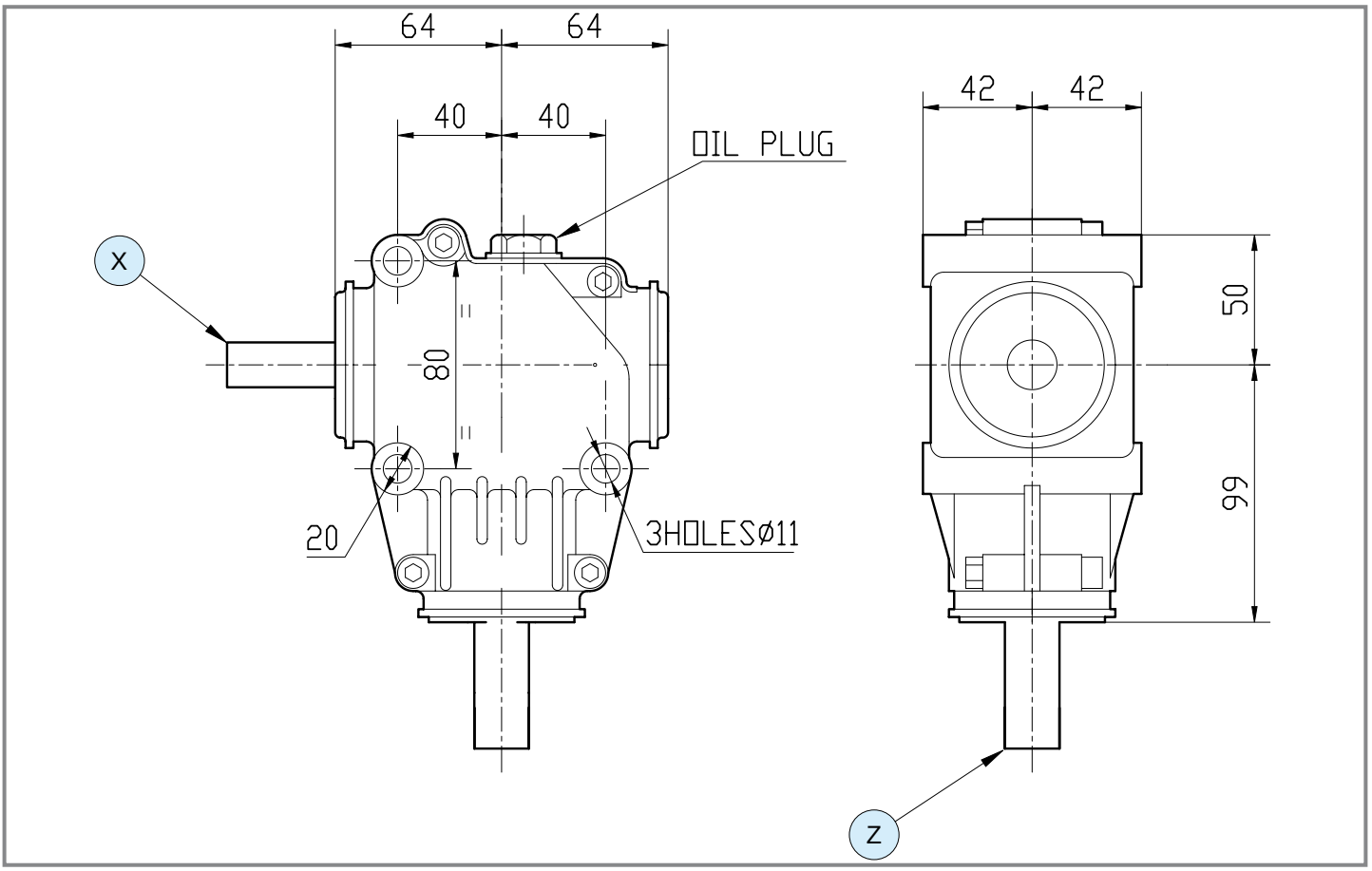

	i	N_1 [rpm]	P_1 [kW]	M_2 [Nm]	Shaft type X	Shaft type Y	Shaft type Z	Input	Option	Code	Mounting	
-	**1.00**	540	8.0	137	13 L 80 ø 25 n.2 ø8	-	1 1" 3/8 Z6	Z	-	9.150.800	1 2	std
-	**1.00**	540	8.0	137	12 L 74 ø 25	-	12 L 54 ø 25	Z	-	9.150.810	1 2	std
	1.00	540	8.0	137	19 L 38 ø 3/4"	-	19 L 38 ø 3/4"	Z	-	9.150.885	1 2	special

comer industries

L-5A

Code **104**

(0.01)



[kg] 8 | [l] 0.4

Per configurazioni non a catalogo contattare Servizio Tecnico-Commerciale
For non-catalog configurations contact Technical-Commercial Service

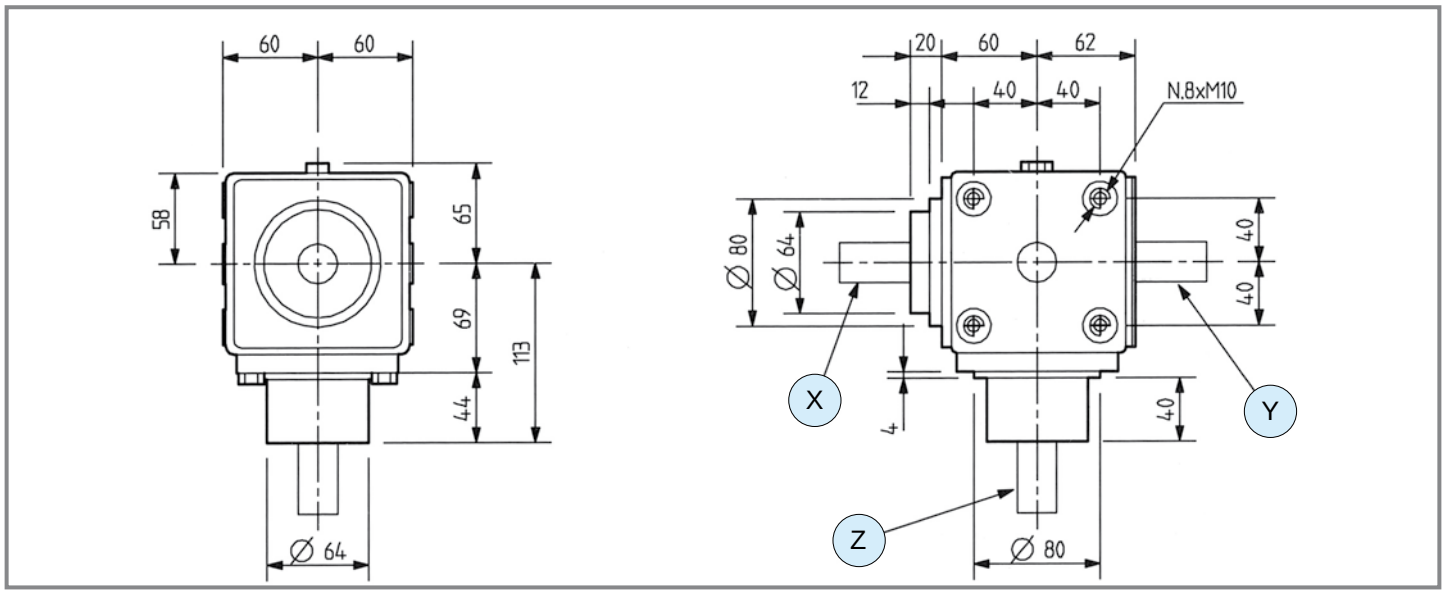

1 - Ruota libera / *Free wheel*

	i	N_1 [rpm]	P_1 [kW]	M_2 [Nm]	Shaft type X	Shaft type Y	Shaft type Z	Input	Option	Code	Mounting	
M	**3.00**	540	5.1	29	16 L 50 ø 22	-	16 L 70 ø 22	X	1	9.104.628	21 22	special
	3.00	540	5.1	29	16 L 50 ø 22	-	16 L 70 ø 22	X	1	9.104.630	23 24	special
	3.00	540	5.1	29	12 L 52 ø 25	-	12 L 57 ø 25	X	1	9.104.648	23 24	std
	2.78	540	5.1	31	1 1" 3/8 Z6	-	12 L 48 ø 25	X	-	9.104.381	21 22	std
	1.90	540	11.0	99	12 L 60 ø 25	12 L 60 ø 25	1 1" 3/8 Z6	Z	-	9.104.322	33 34	std
-	**1.00**	540	11.0	189	1 1" 3/8 Z6	-	12 L 50 ø 25	Z	-	9.104.000	1 2	std
	1.00	540	11.0	189	12 L 60 ø 25	12 L 60 ø 25	12 L 62 ø 25	Z	-	9.104.010	5 6	std
R	**1.90**	540	7.0	228	12 L 60 ø 25	12 L 60 ø 25	12 L 72 ø 25	Z	-	9.104.013	5 6	std
	1.90	540	7.0	228	1 1" 3/8 Z6	-	12 L 72 ø 25	Z	-	9.104.014	1 2	std
	1.90	540	7.0	228	16 L 50 ø 22	-	12 L 72 ø 25	Z	-	9.104.008	1 2	special
	2.78	540	2.9	138	16 L 60 ø 22	12 L 58 ø 25	1 1" 3/8 Z6	Z	-	9.104.037	5 6	special
	2.78	540	2.9	138	12 L 46.5 ø 25	-	12 L 47 ø 25	Z	-	9.104.142	3 4	std

L-25J

Code **124.8**

L-25A

Code **124**

(0.01)



[kg] 4.1 | GREASE [kg] 0.35

Per configurazioni non a catalogo contattare Servizio Tecnico-Commerciale
For non-catalog configurations contact Technical-Commercial Service

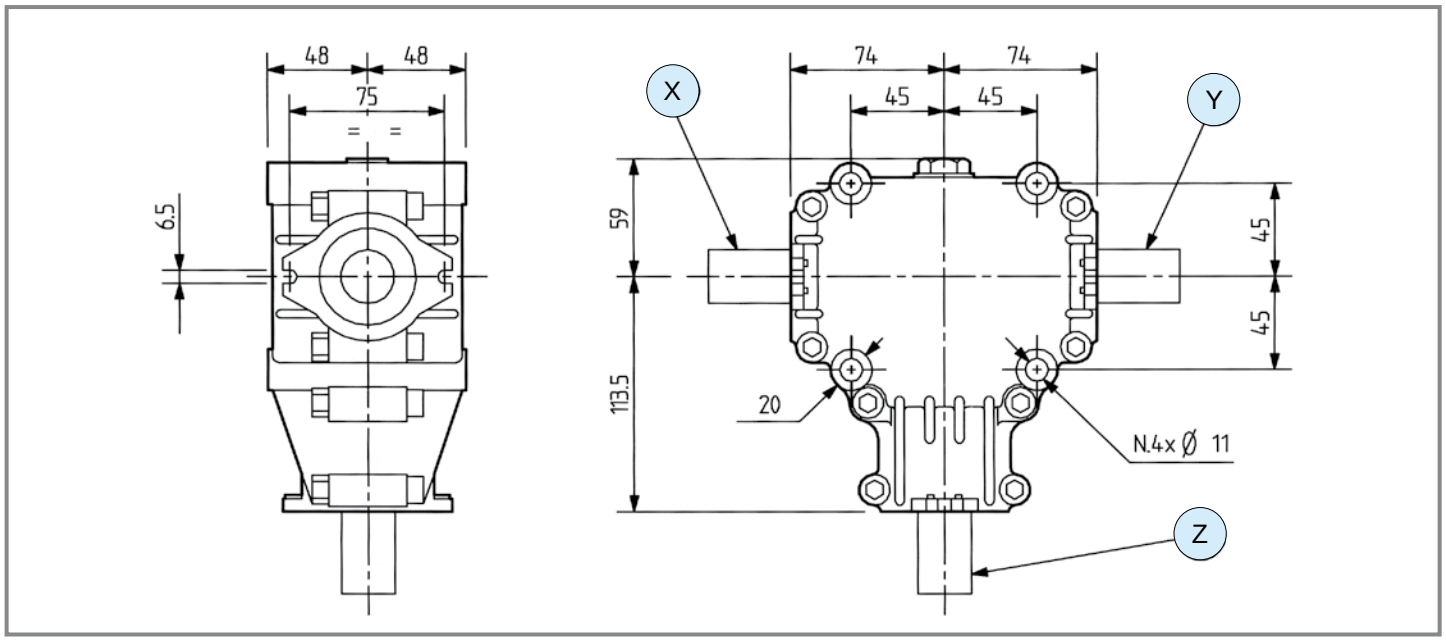

1 - Ruota libera / *Free wheel*

	i	N_1 [rpm]	P_1 [kW]	M_2 [Nm]	Shaft type X	Shaft type Y	Shaft type Z	Input	Option	Code	Mounting	
	3.00	540	5.1	29	1 — 1" 3/8 Z6	-	12 — L 69.5 — ø 25	X	1	9.124.895	21 22	std
	3.00	540	5.1	29	1 — 1" 3/8 Z6	-	16 — L 69.5 — ø 22	X	1	9.124.878	21 22	std
	3.00	540	5.1	29	1 — 1" 3/8 Z6	-	16 — L 69.5 — ø 22	X	1	9.124.879	23 24	std
	2.78	540	5.1	31	1 — 1" 3/8 Z6	-	16 — L 45 — ø 22	Z	-	9.124.034	21 22	special
	2.78	540	5.1	31	1 — 1" 3/8 Z6	-	12 — L 47 — ø 25	Z	-	9.124.029	21 22	special
M	**1.90**	540	11.0	99	12 — L 54 — ø 25	12 — L 54 — ø 25	1 — 1" 3/8 Z6	Z	-	9.124.912	33 34	special
	1.90	540	11.0	99	12 — L 54 — ø 25	12 — L 54 — ø 25	12 — L 61.5 — ø 25	Z	-	9.124.032	33 34	special
	1.90	540	11.0	99	12 — L 54 — ø 25	-	12 — L 72 — ø 25	X	-	9.124.019	23 24	special
	1.90	540	7.0	63	12 — L 54 — ø 25	12 — L 54 — ø 25	12 — L 72 — ø 25	X	-	9.124.020	25 26	special
	1.90	540	11.0	99	1 — 1" 3/8 Z6	-	16 — L 60 — ø 22	X	-	9.124.873	23 24	std
	1.90	540	11.0	99	1 — 1" 3/8 Z6	-	16 — L 60 — ø 22	X	-	9.124.874	21 22	std

comer industries

L-25J
Code **124.8**

L-25A
Code **124**

(0.01)



2 - Bulloneria in acciaio inossidabile / *Stainless steel bolts*

	i	N_1 [rpm]	P_1 [kW]	M_2 [Nm]	Shaft type X	Shaft type Y	Shaft type Z	Input	Option	Code	Mounting	
M	**1.35**	540	9.9	126	17 L 70 ø 25 n.2 ø8	-	1 1" 3/8 Z6	Z	-	9.124.880	29 30	std
M	**1.25**	540	10.0	137	13 L 43.5 ø 25 n.1 ø8	-	12 L 61.5 ø 25	Z	-	9.124.897	29 30	std
-	**1.00**	540	11.0	189	17 L 70 ø 25 n.2 ø8	-	1 1" 3/8 Z6	Z	-	9.124.800	1 2	std
-	**1.00**	540	11.0	189	12 L 61.5 ø 25	12 L 54 ø 25	12 L 61.5 ø 25		-	9.124.813	5 6	std
-	**1.00**	540	11.0	189	17 L 165 ø 25 n.2 ø8	-	1 1" 3/8 Z6	Z	-	9.124.870	1 2	std
-	**1.00**	540	11.0	189	17 L 70 ø 25 n.2 ø8	-	1 1" 3/8 Z6	Z	-	9.124.881	1 2	std
-	**1.00**	540	11.0	189	12 L 54 ø 25	12 L 54 ø 25	12 L 61.5 ø 25	Z	-	9.124.006	5 6	special
R	**1.90**	540	2.9	95	12 L 54 ø 25	-	12 L 72 ø 25	Z	-	9.124.019	3 4	special
R	**2.78**	540	8.1	386	12 L 54 ø 25	-	1 1" 3/8 Z6	Z	-	9.124.011	1 2	special
R	**2.78**	540	2.9	138	12 L54 ø 25	-	12 L 47 ø 25	Z	-	9.124.021	1 2	special
R	**2.78**	540	2.9	138	12 L 54 ø 25	12 L 54 ø 25	12 L 47 ø 25	Y	-	9.124.022	5 6	special
R	**2.78**	540	2.9	138	12 L 54 ø 25	-	12 L 47 ø 25	Z	2	9.124.671	1 2	special
R	**3.30**	540	2.2	125	12 L 54 ø 25	12 L 54 ø 25	12 L 59.5 ø 25	Z	-	9.124.111	5 6	special
R	**3.30**	540	2.2	125	12 L 54 ø 25	12 L 35 ø 25	12 L 59.5 ø 25	Z	-	9.124.894	5 6	std

T-281J

Code **281.8**

T-281A

Code **281**

(0.01)



[kg] 7 | [l] 0.5

Per configurazioni non a catalogo contattare Servizio Tecnico-Commerciale
For non-catalog configurations contact Technical-Commercial Service

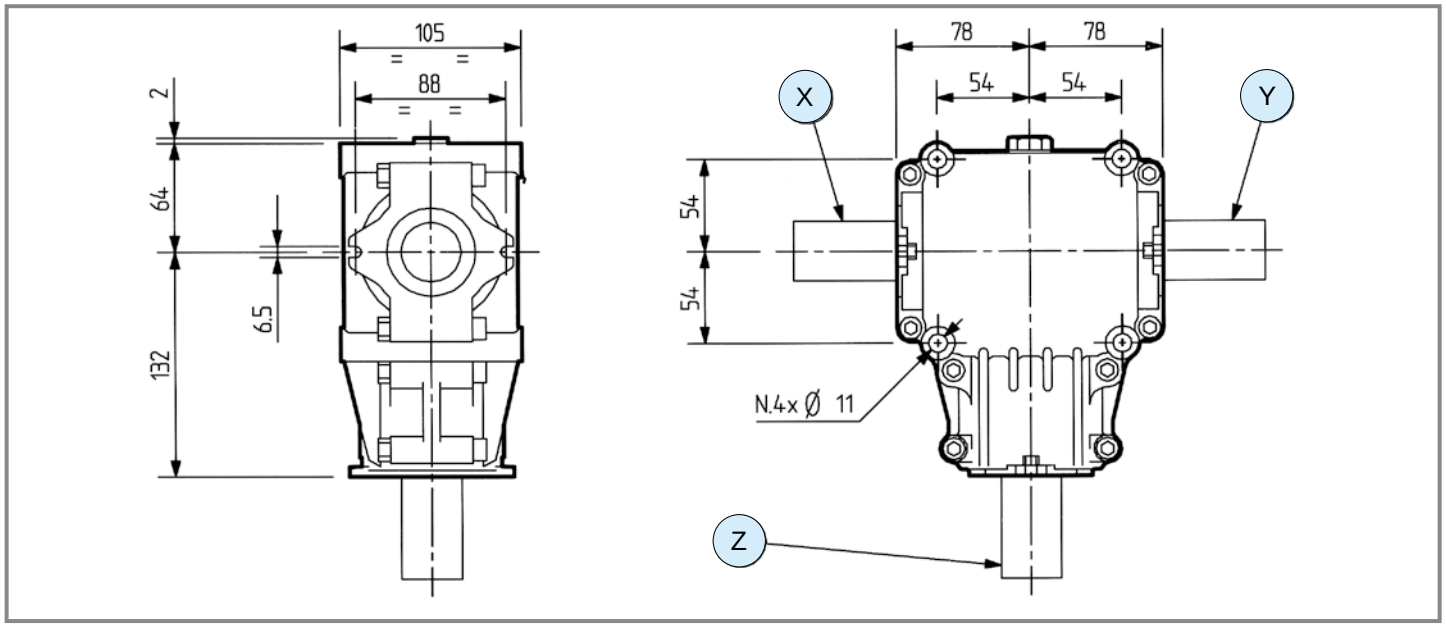

	i	N_1 [rpm]	P_1 [kW]	M_2 [Nm]	1 - Ruota libera / *Free wheel* Shaft type X	Shaft type Y	Shaft type Z	Input	Option	Code	Mounting	
M	**2.91**	540	8.1	48	1 — 1" 3/8 Z6	1 — 1" 3/8 Z6	1 — 1" 3/8 Z6	Z	-	9.281.024	25 26	std
	2.91	540	8.1	48	1 — 1" 3/8 Z6	-	18 — L 60 — ø 30	X	1	9.281.874	21 22	std
	2.91	540	8.1	48	1 — 1" 3/8 Z6	-	18 — L 60 — ø 30	X	1	9.281.878	23 24	std
	2.16	540	10.3	82	1 — 1" 3/8 Z6	1 — 1" 3/8 Z6	1 — 1" 3/8 Z6	X	-	9.281.022	25 26	special
	1.84	540	12.5	117	18 — L 60 — ø 30	18 — L 60 — ø 30	1 — 1" 3/8 Z6	Z	-	9.281.009	33 34	std
	1.84	540	12.5	117	1 — 1" 3/8 Z6	-	1 — 1" 3/8 Z6	Z	-	9.281.020	23 24	std
	1.35	540	14.7	187	18 — L 61.7 — ø 30	-	18 — L 58 — ø 30	Z	-	9.281.880	29 30	std
-	**1.00**	540	17.0	292	1 — 1" 3/8 Z6	1 — 1" 3/8 Z6	1 — 1" 3/8 Z6	Z	-	9.281.012	5 6	std
	1.00	540	17.0	292	18 — L 60 — ø 30	18 — L60 — ø 30	1 — 1" 3/8 Z6	Z	-	9.281.879	5 6	std
	1.00	540	17.0	292	1 — 1" 3/8 Z6	-	1 — 1" 3/8 Z6	X	-	9.281.014	1 2	std

comer industries

T-281J
Code **281.8**

T-281A
Code **281**

(0.01)

	i	N_1 [rpm]	P_1 [kW]	M_2 [Nm]	Shaft type X	Shaft type Y	Shaft type Z	Input	Option	Code	Mounting	
-	**1.00**	540	17.0	292	18 L 62 ø 30	-	1 1" 3/8 Z6	Z	-	9.281.026	1 2	std
-	**1.00**	540	17.0	292	18 L 60 ø 30	18 L 60 ø 30	18 L 60 ø 30	Z	-	9.281.040	5 6	std
R	**1.46**	540	13.0	326	1 1" 3/8 Z6	-	1 1" 3/8 Z6	Z	-	9.281.877	3 4	std
R	**1.84**	540	8.8	278	1 1" 3/8 Z6	-	1 1" 3/8 Z6	Z	-	9.281.020	3 4	std
R	**2.16**	540	6.6	245	1 1" 3/8 Z6	1 1" 3/8 Z6	1 1" 3/8 Z6	Z	-	9.281.022	5 6	special
R	**2.91**	540	4.0	200	1 1" 3/8 Z6	1 1" 3/8 Z6	1 1" 3/8 Z6	Z	-	9.281.024	5 6	std
R	**2.91**	540	4.0	200	18 L 60 ø 30	-	18 L 60 ø 30	Z	-	9.281.016	3 4	std

T-19

Code **259**

(0.01)



[kg] 14 | [l] 0.9

Per configurazioni non a catalogo contattare Servizio Tecnico-Commerciale
For non-catalog configurations contact Technical-Commercial Service

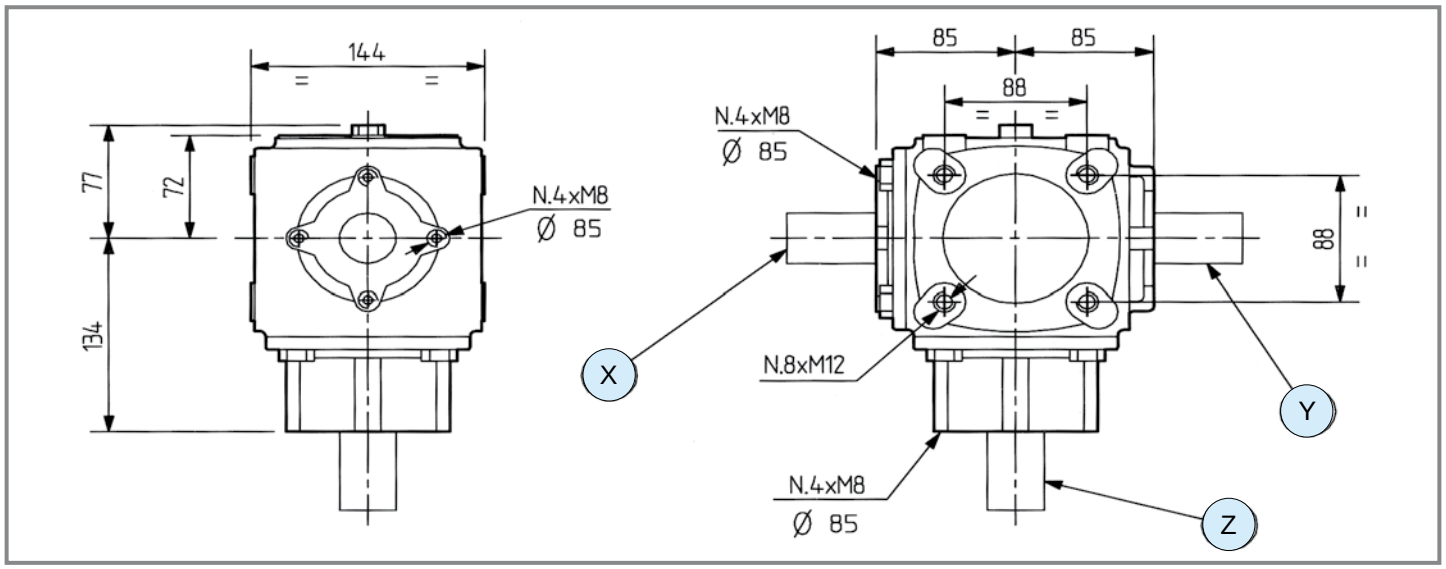

	i	N_1 [rpm]	P_1 [kW]	M_2 [Nm]	Shaft type X	Shaft type Y	Shaft type Z	Input	Option	Code	Mounting	
M	**2.91**	540	7.7	45	1 – 1" 3/8 Z6	1 – 1" 3/8 Z6	1 – 1" 3/8 Z6	X	-	9.259.070	33 34	special
	2.91	540	7.7	45	1 – 1" 3/8 Z6	-	1 – 1" 3/8 Z6	X	-	9.259.079	27 28	special
	2.91	540	7.7	45	1 – 1" 3/8 Z6	-	1 – 1" 3/8 Z6	X	-	9.259.080	25 26	special
	1.84	540	14.7	137	18 – L 60 – ø 30	18 – L 60 – ø 30	1 – 1" 3/8 Z6	Z	-	9.259.918	33 34	std
	1.84	540	14.7	137	1 – 1" 3/8 Z6	1 – 1" 3/8 Z6	1 – 1" 3/8 Z6	X	-	9.259.013	27 28	std
	1.84	540	14.7	137	18 – L 60 – ø 30	18 – L 60 – ø 30	18 – L 60 – ø 30	X	-	9.259.021	25 26	std
	1.84	540	14.7	137	1 – 1" 3/8 Z6	-	1 – 1" 3/8 Z6	X	-	9.259.012	23 24	std
	1.46	540	20.6	241	1 – 1" 3/8 Z6	1 – 1" 3/8 Z6	1 – 1" 3/8 Z6	X	-	9.259.000	27 28	std
	1.20	540	21.6	308	1 – 1" 3/8 Z6	1 – 1" 3/8 Z6	1 – 1" 3/8 Z6	Y	-	9.259.265	25 26	special
-	**1.00**	540	40.4	693	4 shaft 1 3/8" Z6			-	-	9.259.243	-	special
	1.00	540	24.3	417	1 – 1" 3/8 Z6	-	1 – 1" 3/8 Z6	Z	-	9.259.005	1 2	std
	1.00	540	24.3	417	1 – 1" 3/8 Z6	-	1 – 1" 3/8 Z6	Z	-	9.259.006	3 4	std

comer industries

T-19

Code **259**

(0.01)



	i	N_1 [rpm]	P_1 [kW]	M_2 [Nm]	Shaft type X	Shaft type Y	Shaft type Z	Input	Option	Code	Mounting	
-	**1.00**	540	24.3	417	1 — 1" 3/8 Z6	1 — 1" 3/8 Z6	1 — 1" 3/8 Z6	Z	-	9.259.007	5 6	std
-	**1.00**	540	16.9	290	18 — L 60 — ø 30	18 — L 60 — ø 30	18 — L 60 — ø 30	Z	-	9.259.016	5 6	std
-	**1.00**	540	16.9	290	18 — L 60 — ø 30	18 — L 60 — ø 30	18 — L 60 — ø 30	Z	-	9.259.032	5 6	**std**
R	**1.46**	540	16.9	423	1 — 1" 3/8 Z6	1 — 1" 3/8 Z6	1 — 1" 3/8 Z6	Z	-	9.259.000	5 6	std
R	**1.46**	540	16.9	423	18 — L 60 — ø 30	18 — L 60 — ø 30	1 — 1" 3/8 Z6	Z	-	9.259.010	5 6	std
R	**1.84**	540	11.0	351	1 — 1" 3/8 Z6	-	1 — 1" 3/8 Z6	Z	-	9.259.012	3 4	std
R	**1.84**	540	11.0	351	1 — 1" 3/8 Z6	-	1 — 1" 3/8 Z6	Z	-	9.259.239	7 8	std
R	**2.16**	540	6.6	245	1 — 1" 3/8 Z6	-	1 — 1" 3/8 Z6	Z	-	9.259.263	1 2	special
R	**2.91**	540	3.7	185	1 — 1" 3/8 Z6	1 — 1" 3/8 Z6	1 — 1" 3/8 Z6	Z	-	9.259.070	5 6	special
R	**2.91**	540	3.7	185	1 — 1" 3/8 Z6	-	1 — 1" 3/8 Z6	Z	-	9.259.079	1 2	special
R	**2.91**	540	3.7	185	1 — 1" 3/8 Z6	-	1 — 1" 3/8 Z6	Z	-	9.259.080	3 4	special

T-27A

Code **267**

(0.01)



[kg] 21 | [l] 1.2

Per configurazioni non a catalogo contattare Servizio Tecnico-Commerciale
For non-catalog configurations contact Technical-Commercial Service

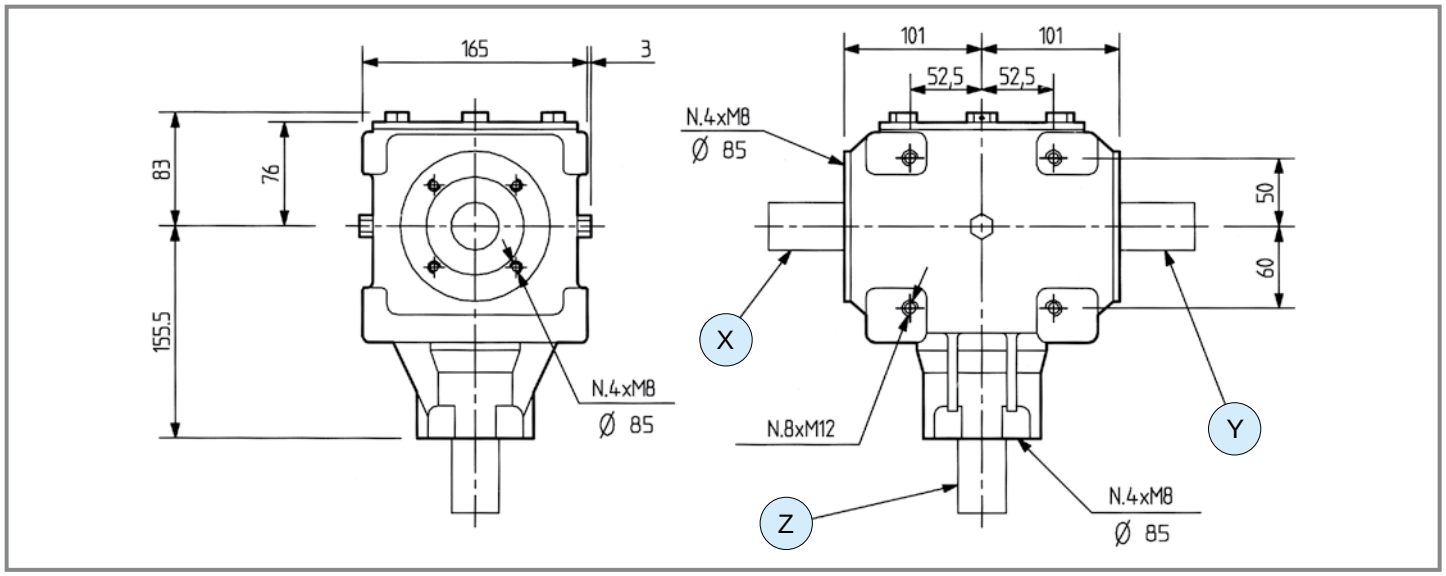

	i	N_1 [rpm]	P_1 [kW]	M_2 [Nm]	Shaft type X	Shaft type Y	Shaft type Z	Input	Option	Code	Mounting	
	1.92	540	27.9	249	[1] 1" 3/8 Z6	[1] 1" 3/8 Z6	[1] 1" 3/8 Z6	Z	-	9.267.245	33 34	std
	1.92	540	22.1	197	[1] 1" 3/8 Z6	[1] 1" 3/8 Z6	[1] 1" 3/8 Z6	Z	-	9.267.007	25 26	std
	1.92	540	22.1	197	-	[1] 1" 3/8 Z6	[1] 1" 3/8 Z6	Y	-	9.267.021	21 22	std
	1.92	540	22.1	728	-	[1] 1" 3/8 Z6	[1] 1" 3/8 Z6	Z	-	9.267.022	23 24	std
	1.92	540	22.1	197	[3] L 68 ø 35	[3] L 68 ø 35	[1] 1" 3/8 Z6	Z	-	9.267.034	33 34	std
M	**1.92**	540	22.1	197	[1] 1" 3/8 Z6	[1] 1" 3/8 Z6	[1] 1" 3/8 Z6	Z	-	9.267.023	33 34	std
	1.92	540	22.1	197	[1] 1" 3/8 Z6	-	[1] 1" 3/8 Z6	Z	-	9.267.235	31 32	std
	1.46	540	38.3	450	[1] 1" 3/8 Z6	[1] 1" 3/8 Z6	[1] 1" 3/8 Z6	Z	-	9.267.042	33 34	std
	1.46	540	38.3	450	[1] 1" 3/8 Z6	-	[1] 1" 3/8 Z6	Z	-	9.267.059	29 30	std
	1.35	540	36.7	466	[1] 1" 3/8 Z6	[1] 1" 3/8 Z6	[1] 1" 3/8 Z6	Z	-	9.267.234	33 34	std
	1.35	540	36.7	466	[1] 1" 3/8 Z6	-	[1] 1" 3/8 Z6	Z	-	9.267.048	31 32	**std**

comer industries

T-27A

Code **267**

(0.01)



	1 - Ruota libera / *Free wheel*											
	i	**N_1 [rpm]**	**P_1 [kW]**	**M_2 [Nm]**	**Shaft type** X	**Shaft type** Y	**Shaft type** Z	**Input**	**Option**	**Code**	**Mounting**	
M	**1.35**	540	36.7	466	[1] 1" 3/8 Z6	-	[1] 1" 3/8 Z6	Z	-	9.267.845	29 30	std
-	**1.00**	540	40.5	695	-	[1] 1" 3/8 Z6	[1] 1" 3/8 Z6	Z	-	9.267.043	3 4	std
	1.00	540	40.5	695	-	[1] 1" 3/8 Z6	[1] 1" 3/8 Z6	Z	-	9.267.041	5 6	std
	1.00	540	40.5	693	[4] L 117 ø 40	[50] ASA 16/32 Z19	[1] 1" 3/8 Z6	Y	-	9.267.801	11 12	special
	1.00	540	40.5	695	[7] 36x40 DIN5482	-	[1] 1" 3/8 Z6	Z	1	9.267.601	1 2	special
	1.00	540	40.5	693	[1] 1" 3/8 Z6	[1] 1" 3/8 Z6	[1] 1" 3/8 Z6	Z	-	9.267.806	5 6	std
	1.00	540	40.5	693	[3] L 68 ø 35	-	[3] L 50 ø 35	Z	-	9.267.105	1 2	std
R	**1.35**	540	36.7	850	[1] 1" 3/8 Z6	-	[1] 1" 3/8 Z6	Z	-	9.267.856	1 2	std
	1.46	540	24.3	608	[1] 1" 3/8 Z6	-	[1] 1" 3/8 Z6	Z	-	9.267.224	1 2	std
	1.92	540	15.1	497	[1] 1" 3/8 Z6	[1] 1" 3/8 Z6	[1] 1" 3/8 Z6	X	-	9.267.023	11 12	std
	1.92	540	15.1	497	-	[1] 1" 3/8 Z6	[1] 1" 3/8 Z6	Z	-	9.267.022	3 4	std
	1.92	540	15.1	135	[1] 1" 3/8 Z6	[1] 1" 3/8 Z6	[1] 1" 3/8 Z6	Z	-	9.267.007	5 6	std
	1.92	540	15.1	135	-	[1] 1" 3/8 Z6	[1] 1" 3/8 Z6	Z	-	9.267.021	1 2	std

L-310J
Code **310.8**

L-310A
Code **310**

(0.01)



[kg] 18 | [l] 0.8

Per configurazioni non a catalogo contattare Servizio Tecnico-Commerciale
For non-catalog configurations contact Technical-Commercial Service

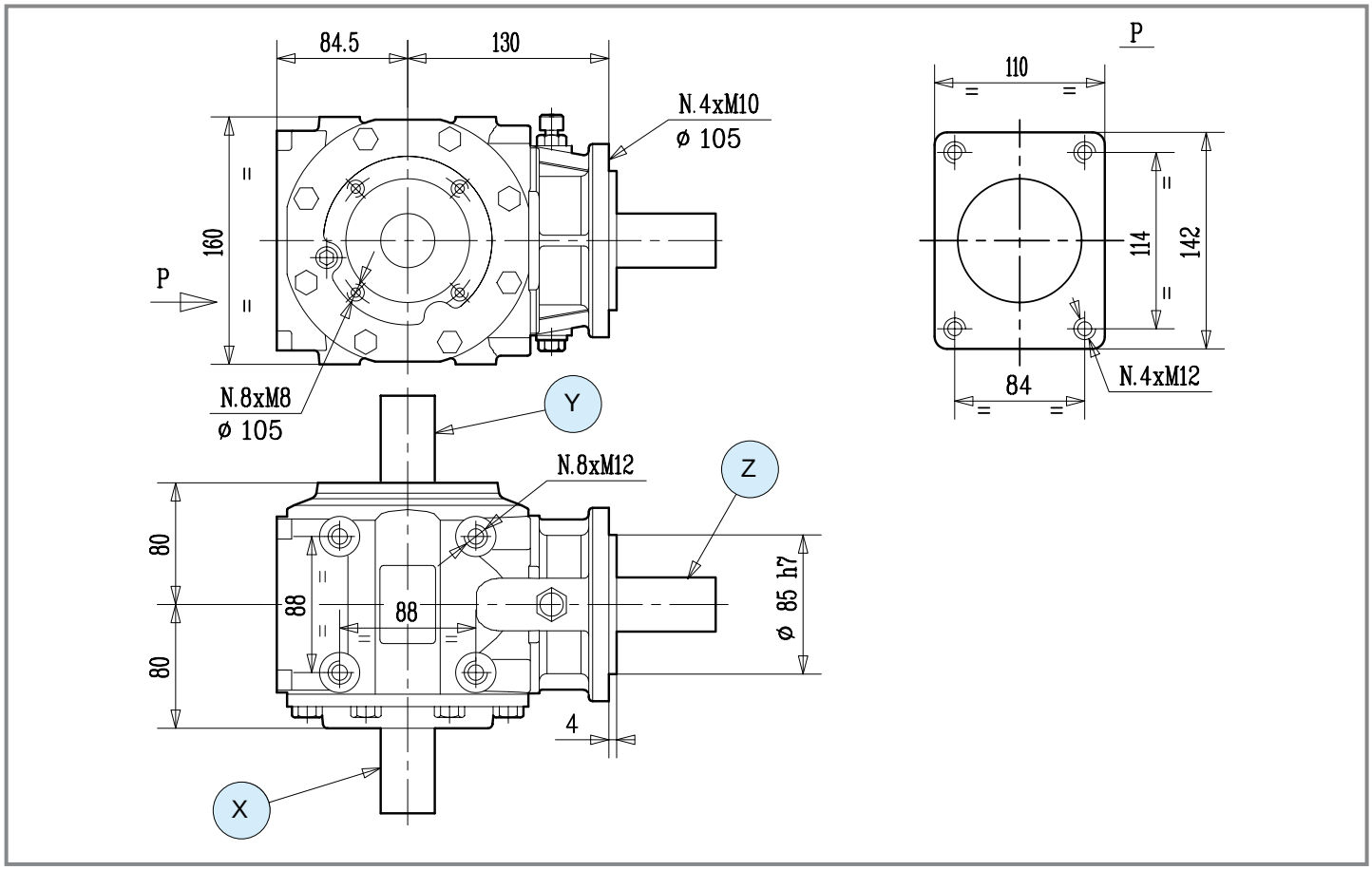

	i	N_1 [rpm]	P_1 [kW]	M_2 [Nm]	1 - Ruota libera / *Free wheel* Shaft type X	Shaft type Y	Shaft type Z	Input	Option	Code	Mounting	
M ⇨ +	**3.00**	540	22.1	126	1 — 1" 3/8 Z6	1 — 1" 3/8 Z6	14 — L 60 — ø 33	X	1	9.310.870	25 26	**std**
	3.00	540	22.1	126	1 — 1" 3/8 Z6	-	14 — L 60 — ø 33	X	1	9.310.875	21 22	**std**
	3.00	540	22.1	126	1 — 1" 3/8 Z6	-	14 — L 60 — ø 33	X	1	9.310.876	23 24	**std**
	3.00	540	22.1	126	1 — 1" 3/8 Z6	-	14 — L 60 — ø 33	X	-	9.310.702	21 22	**std**
	3.00	540	22.1	126	1 — 1" 3/8 Z6	1 — 1" 3/8 Z6	14 — L 60 — ø 33	X	-	9.310.703	27 28	**std**
	3.00	540	22.1	126	-	1 — 1" 3/8 Z6	14 — L 60 — ø 33	Y	-	9.310.707	23 24	**std**
	2.50	540	25.7	176	1 — 1" 3/8 Z6	-	14 — L 60 — ø 33	X	-	9.310.700	21 22	**std**
	2.50	540	25.7	176	1 — 1" 3/8 Z6	1 — 1" 3/8 Z6	14 — L 60 — ø 33	X	-	9.310.738	27 28	**std**

comer industries

L-310J
Code **310.8**

L-310A
Code **310**

(0.01)



	i	N_1 [rpm]	P_1 [kW]	M_2 [Nm]	Shaft type X	Shaft type Y	Shaft type Z	Input	Option	Code	Mounting	
M	**1.93**	540	29.4	261	1 — 1" 3/8 Z6	-	14 — L 60 — ø 33	X	-	9.310.701	21 22	**std**
M	**1.93**	540	29.4	261	1 — 1" 3/8 Z6	-	14 — L 60 — ø 33	X	-	9.310.735	23 24	**std**
M	**1.60**	540	31.5	337	1 — 1" 3/8 Z6	1 — 1" 3/8 Z6	14 — L 60 — ø 33	Y	-	9.310.740	25 26	**std**

T-304A

Code **304**

(0.01)

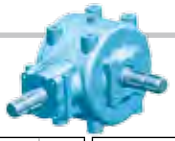

[kg] 19 | [l] 1.1

Per configurazioni non a catalogo contattare Servizio Tecnico-Commerciale
For non-catalog configurations contact Technical-Commercial Service

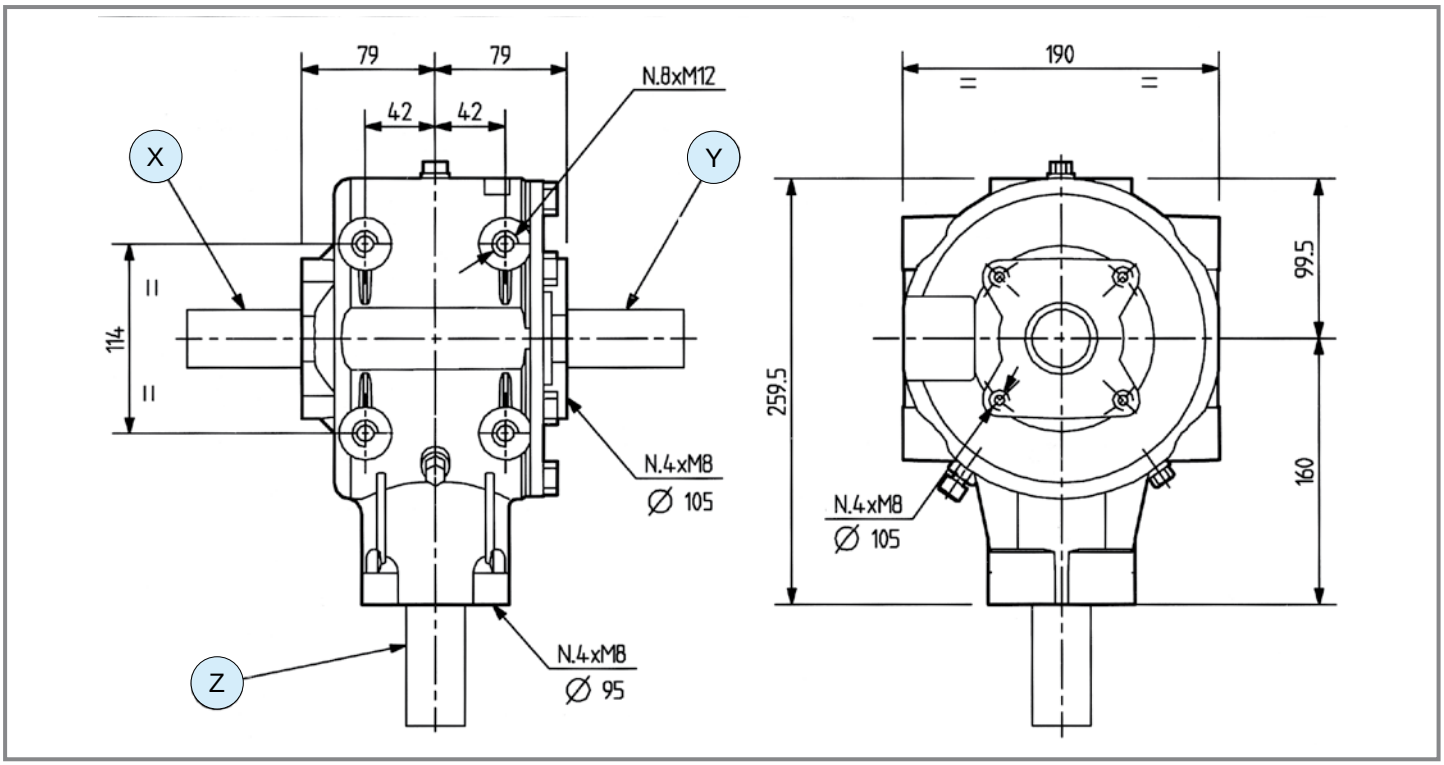

3 - Dentatura elicoidale / *Helical Teeth*

	i	N_1 [rpm]	P_1 [kW]	M_2 [Nm]	Shaft type X	Shaft type Y	Shaft type Z	Input	Option	Code	Mounting	
M	**4.50**	540	28.0	107	1 1" 3/8 Z6	1 1" 3/8 Z6	1 1" 3/8 Z6	Y	3	9.304.019	27 28	special
M	**3.00**	540	36.9	211	1 1" 3/8 Z6	1 1" 3/8 Z6	1 1" 3/8 Z6	X	-	9.304.000	25 26	std
M	**3.00**	540	36.9	211	1 1" 3/8 Z6	-	1 1" 3/8 Z6	X	-	9.304.010	21 22	std
M	**3.00**	540	36.9	211	1 1" 3/8 Z6	-	1 1" 3/8 Z6	X	-	9.304.013	23 24	std
M	**1.93**	540	40.4	359	1 1" 3/8 Z6	1 1" 3/8 Z6	1 1" 3/8 Z6	X	-	9.304.006	25 26	std
M	**1.93**	540	40.4	359	1 1" 3/8 Z6	-	1 1" 3/8 Z6	X	-	9.304.015	23 24	std
M	**1.93**	540	40.4	359	1 1" 3/8 Z6	-	1 1" 3/8 Z6	Y	-	9.304.014	21 22	std
R	**1.93**	540	27.9	924	1 1" 3/8 Z6	1 1" 3/8 Z6	1 1" 3/8 Z6	Z	-	9.304.006	5 6	std
R	**1.93**	540	27.9	924	1 1" 3/8 Z6	-	1 1" 3/8 Z6	Z	-	9.304.015	3 4	std
R	**1.93**	540	27.9	924	1 1" 3/8 Z6	-	1 1" 3/8 Z6	Z	-	9.304.014	1 2	std

T-304A

Code **304**

(0.01)



	3 - Dentatura elicoidale / *Helical Teeth*											
	i	N_1 [rpm]	P_1 [kW]	M_2 [Nm]	Shaft type X	Shaft type Y	Shaft type Z	Input	Option	Code	Mounting	
R	**3.00**	540	18.4	947	1 1" 3/8 Z6	1 1" 3/8 Z6	1 1" 3/8 Z6	Z	-	9.304.000	5 6	std
	3.00	540	18.4	947	1 1" 3/8 Z6	-	1 1" 3/8 Z6	Z	-	9.304.010	1 2	std
	3.00	540	18.4	947	1 1" 3/8 Z6	-	1 1" 3/8 Z6	Z	-	9.304.013	3 4	std
	4.50	540	11.0	849	1 1" 3/8 Z6	-	1 1" 3/8 Z6	Z	3	9.304.018	3 4	special
	4.50	540	11.0	849	1 1" 3/8 Z6	1 1" 3/8 Z6	1 1" 3/8 Z6	Z	3	9.304.019	5 6	special
	5.33	540	9.9	906	1 1" 3/8 Z6	1 1" 3/8 Z6	1 1" 3/8 Z6	Z	3	9.304.025	5 6	special

T-278A

Code **278**

(0.01)

[kg] 37 | [l] 2.5

Per configurazioni non a catalogo contattare Servizio Tecnico-Commerciale
For non-catalog configurations contact Technical-Commercial Service

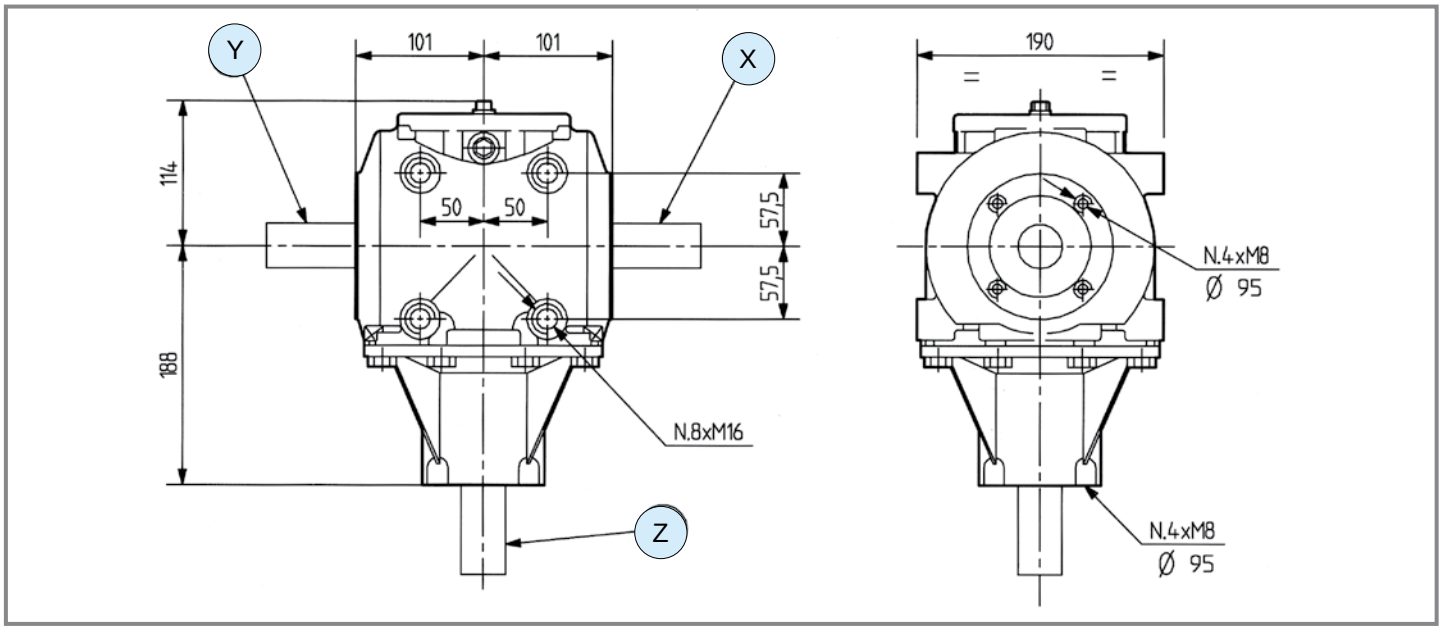

5 - Rinforzato / *Reinforzed*

	i	N_1 [rpm]	P_1 [kW]	M_2 [Nm]	Shaft type X	Shaft type Y	Shaft type Z	Input	Option	Code	Mounting	
M	**2.91**	540	33.1	195	1 1" 3/8 Z6	-	1 1" 3/8 Z6	X	-	9.278.013	23 24	std
M	**2.91**	540	33.1	195	1 1" 3/8 Z6	1 1" 3/8 Z6	1 1" 3/8 Z6	Y	-	9.278.014	25 26	std
M	**2.33**	540	38.3	282	1 1" 3/8 Z6	1 1" 3/8 Z6	1 1" 3/8 Z6	X	-	9.278.011	25 26	std
M	**1.92**	540	40.5	362	1 1" 3/8 Z6	-	1 1" 3/8 Z6	X	-	9.278.006	21 22	std
M	**1.92**	540	40.5	362	1 1" 3/8 Z6	1 1" 3/8 Z6	1 1" 3/8 Z6	X	-	9.278.008	25 26	std
M	**1.92**	540	40.5	362	1 1" 3/8 Z6	-	1 1" 3/8 Z6	Z	-	9.278.007	23 24	std
-	**1.00**	540	40.5	695	1 1" 3/8 Z6	-	1 1" 3/8 Z6	Z	-	9.278.000	1 2	std
-	**1.00**	540	40.5	695	1 1" 3/8 Z6	-	1 1" 3/8 Z6	Z	-	9.278.001	3 4	std
-	**1.00**	540	40.5	695	1 1" 3/8 Z6	1 1" 3/8 Z6	1 1" 3/8 Z6	Z	-	9.278.002	5 6	std
-	**1.00**	540	54.0	926	1 1" 3/8 Z6	1 1" 3/8 Z6	1 1" 3/8 Z6	Z	5	9.278.095	5 6	std

comer industries

T-278A

Code 278

(0.01)



	i	N_1 [rpm]	P_1 [kW]	M_2 [Nm]	Shaft type X	Shaft type Y	Shaft type Z	Input	Option	Code	Mounting	
	1.35	540	41	949	1 1" 3/8 Z6	1 1" 3/8 Z6	1 1" 3/8 Z6	Z	-	9.278.097	5 6	std
	1.46	540	40.5	1014	1 1" 3/8 Z6	1 1" 3/8 Z6	1 1" 3/8 Z6	Z	-	9.278.262	5 6	special
	1.60	540	36.8	1010	1 1" 3/8 Z6	1 1" 3/8 Z6	1 1" 3/8 Z6	Z	-	9.278.005	5 6	std
	1.92	540	33.1	1090	1 1" 3/8 Z6	-	1 1" 3/8 Z6	Z	-	9.278.006	1 2	std
R	**1.92**	540	33.1	1090	1 1" 3/8 Z6	1 1" 3/8 Z6	1 1" 3/8 Z6	Z	-	9.278.008	5 6	std
	1.92	540	33.1	1090	1 1" 3/8 Z6	-	1 1" 3/8 Z6	Z	-	9.278.007	3 4	std
	2.33	540	25.0	999	1 1" 3/8 Z6	-	1 1" 3/8 Z6	Z	-	9.278.224	3 4	std
	2.33	540	25.0	999	-	1 1" 3/8 Z6	1 1" 3/8 Z6	Z	-	9.278.010	3 4	std
	2.91	540	21.3	1063	1 1" 3/8 Z6	-	1 1" 3/8 Z6	Z	-	9.278.012	1 2	std

T-311A | T-311J

Code 311 | Code 311.8

(0.01)



[kg] 23.5 | [l] 1.2

Per configurazioni non a catalogo contattare Servizio Tecnico-Commerciale
For non-catalog configurations contact Technical-Commercial Service

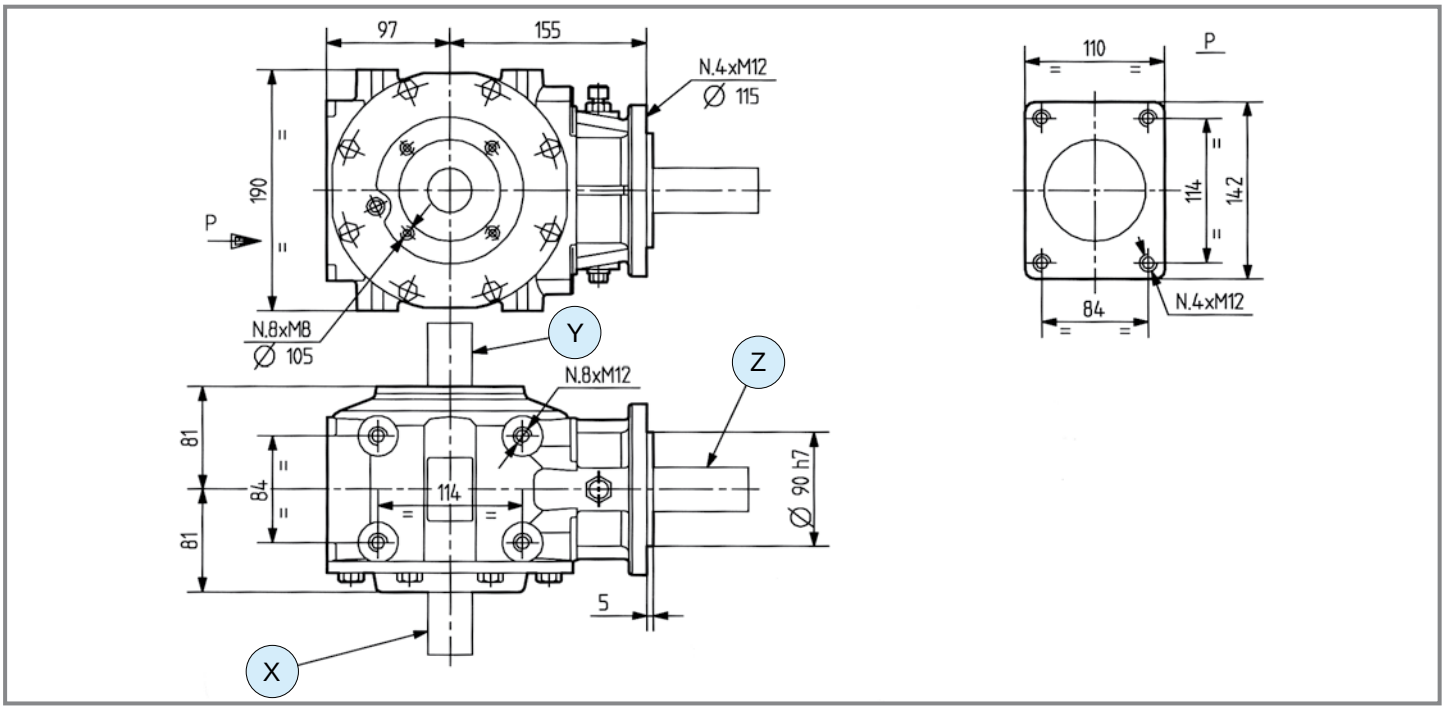

1 - Ruota libera / *Free wheel*

	i	N_1 [rpm]	P_1 [kW]	M_2 [Nm]	Shaft type X	Shaft type Y	Shaft type Z	Input	Option	Code	Mounting	
M	**3.00**	540	36.8	210	1 — 1" 3/8 Z6	-	14 — L 77 — ø 33	X	-	9.311.734	23 / 24	std
	3.00	540	36.8	210	1 — 1" 3/8 Z6	1 — 1" 3/8 Z6	14 — L 77 — ø 33	X	-	9.311.704	27 / 28	std
	3.00	540	36.8	210	1 — 1" 3/8 Z6	-	1 — 1" 3/8 Z6	X	1	9.311.670	21 / 22	std
	3.00	540	36.8	210	1 — 1" 3/8 Z6	-	14 — L 77 — ø 33	X	-	9.311.724	21 / 22	std
	3.00	540	36.8	210	1 — 1" 3/8 Z6	-	1 — 1" 3/8 Z6	X	-	9.311.731	21 / 22	std
	3.00	540	36.8	210	1 — 1" 3/8 Z6	1 — 1" 3/8 Z6	1 — 1" 3/8 Z6	X	-	9.311.747	27 / 28	std
	3.00	540	36.8	210	1 — 1" 3/8 Z6	-	14 — L 77 — ø 33	X	1	9.311.874	21 / 22	std
	3.00	540	36.8	210	1 — 1" 3/8 Z6	1 — 1" 3/8 Z6	14 — L 77 — ø 33	X	1	9.311.875	27 / 28	std
	3.00	540	36.8	210	1 — 1" 3/8 Z6	-	14 — L 77 — ø 33	X	1	9.311.885	23 / 24	std
	3.00	540	36.8	210	1 — 1" 3/8 Z6	-	14 — L 77 — ø 33	X	1	9.311.614	21 / 22	std

comer industries

T-311A
Code **311**

T-311J
Code **311.8**

(0.01)



1 - Ruota libera / *Free wheel*

	i	N_1 [rpm]	P_1 [kW]	M_2 [Nm]	Shaft type X	Shaft type Y	Shaft type Z	Input	Option	Code	Mounting	
M	**3.00**	540	36.8	210	1 — 1" 3/8 Z6	1 — 1" 3/8 Z6	14 — L 77 — ø 33	X	1	9.311.615	21 22	special
	3.00	540	36.8	210	1 — 1" 3/8 Z6	-	14 — L 77 — ø 33	X	1	9.311.622	23 24	special
	2.50	540	38.2	262	1 — 1" 3/8 Z6	-	14 — L 77 — ø 33	X	-	9.311.702	21 22	std
	1.93	540	44.4	395	1 — 1" 3/8 Z6	-	1 — 1" 3/8 Z6	X	1	9.311.632	21 22	std
	1.93	540	44.4	395	1 — 1" 3/8 Z6	-	14 — L 77 — ø 33	X	-	9.311.730	21 22	std
	1.93	540	44.4	395	1 — 1" 3/8 Z6	-	14 — L 77 — ø 33	X	-	9.311.729	23 24	std
	1.93	540	44.4	395	1 — 1" 3/8 Z6	1 — 1" 3/8 Z6	14 — L 77 — ø 33	X	-	9.311.703	27 28	std
	1.60	540	41.9	449	1 — 1" 3/8 Z6	1 — 1" 3/8 Z6	14 — L 77 — ø 33	X	-	9.311.741	27 28	std
	1.60	540	41.9	449	1 — 1" 3/8 Z6	1 — 1" 3/8 Z6	1 — 1" 3/8 Z6	X	1	9.311.623	27 28	std

T-312A | T-313J | T-312ALL

Code 312 | Code 313.8 | Code 312.6

(0.01)

[kg] 27 | [l] 1.5

Per configurazioni non a catalogo contattare Servizio Tecnico-Commerciale
For non-catalog configurations contact Technical-Commercial Service

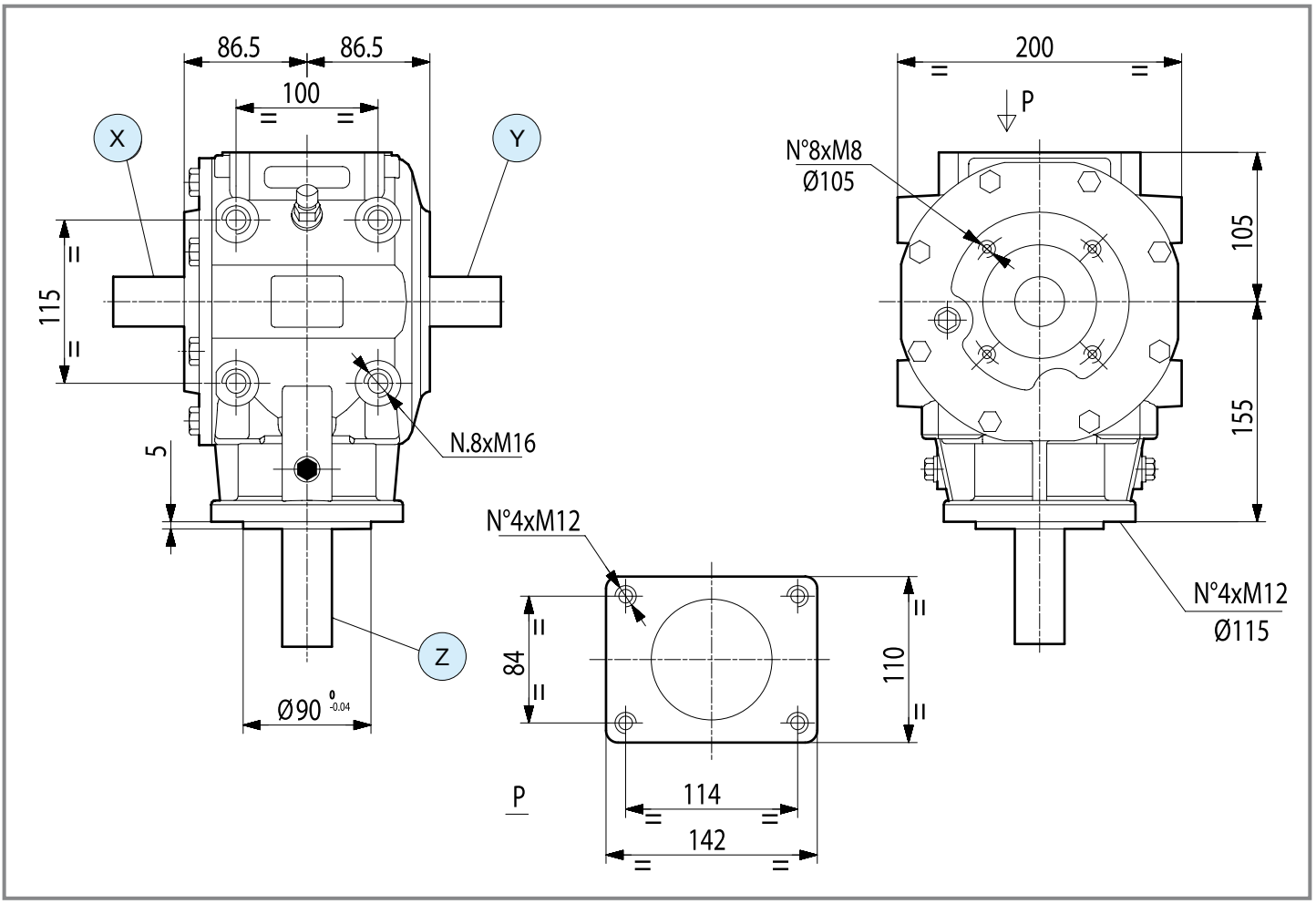

T312A/ALL disponibili su richiesta versioni in alluminio
T312A/ALL aluminium versions available on demand

1 - Ruota libera / *Free wheel*

	i	N_1 [rpm]	P_1 [kW]	M_2 [Nm]	Shaft type X	Shaft type Y	Shaft type Z	Input	Option	Code	Mounting	
M	**3.00**	540	45.6	261	1 – 1" 3/8 Z6	1 – 1" 3/8 Z6	14 – L 77 – ø 33	Y	1	9.313.870	27 28	std
	3.00	540	45.6	261	1 – 1" 3/8 Z6	-	14 – L 77 – ø 33	X	1	9.313.875	21 22	std
	3.00	540	45.6	261	1 – 1" 3/8 Z6	-	1 – 1" 3/8 Z6	X	1	9.313.876	27 28	std
	3.00	540	45.6	261	1 – 1" 3/8 Z6	-	14 – L 77 – ø 33	X	-	9.312.702	21 22	std
	3.00	540	45.6	261	1 – 1" 3/8 Z6	1 – 1" 3/8 Z6	14 – L 77 – ø 33	Y	-	9.312.730	27 28	std
	3.00	540	45.6	261	1 – 1" 3/8 Z6	-	14 – L 77 – ø 33	X	-	9.312.726	27 28	std
	3.00	540	45.6	261	1 – 1" 3/8 Z6	-	1 – 1" 3/8 Z6	X	1	9.312.737	21 22	special

comer industries

T-312A
Code **312**

T-313J
Code **313.8**

T-312ALL
Code **312.6**

(0.01)



1 - Ruota libera / *Free wheel*

	i	N_1 [rpm]	P_1 [kW]	M_2 [Nm]	Shaft type X	Shaft type Y	Shaft type Z	Input	Option	Code	Mounting	
	3.00	540	45.6	261	1 — 1" 3/8 Z6	-	4 — L 85.5 — ø 40	X	1	9.312.763	23 24	special
	3.00	540	45.6	261	1 — 1" 3/8 Z6	-	4 — L 85.5 — ø 40	X	1	9.312.762	21 22	special
	3.00	540	45.6	261	1 — 1" 3/8 Z6	-	14 — L 77 — ø 33	X	1	9.312.756	21 22	special
	3.00	540	45.6	261	1 — 1" 3/8 Z6	-	14 — L 77 — ø 33	X	1	9.312.661	23 24	std
	2.50	540	50	343	1 — 1" 3/8 Z6	-	14 — L 77 — ø 33	X	-	9.312.701	21 22	std
	2.50	540	50	343	1 — 1" 3/8 Z6	1 — 1" 3/8 Z6	14 — L 77 — ø 33	X	-	9.312.717	27 28	std
M	**1.93**	540	53.7	477	1 — 1" 3/8 Z6	-	1 — 1" 3/8 Z6	X	-	9.312.700	21 22	std
	1.93	540	53.7	477	1 — 1" 3/8 Z6	1 — 1" 3/8 Z6	14 — L 77 — ø 33	X	-	9.312.703	27 28	std
	1.93	540	53.7	477	1 — 1" 3/8 Z6	1 — 1" 3/8 Z6	1 — 1" 3/8 Z6	X	-	9.312.615	27 28	std
	1.60	1000	76.5	709	1 — 1" 3/8 Z6	1 — 1" 3/8 Z6	1 — 1" 3/8 Z6	X	-	9.313.880	27 28	std
	1.60	1000	76.5	443	1 — 1" 3/8 Z6	-	14 — L 77 — ø 33	X	-	9.312.712	21 22	std
	1.60	1000	76.5	443	1 — 1" 3/8 Z6	1 — 1" 3/8 Z6	14 — L 77 — ø 33	X	-	9.312.720	27 28	std
	1.60	1000	76.5	443	1 — 1" 3/8 Z6	1 — 1" 3/8 Z6	14 — L 77 — ø 33	X	1	9.312.755	27 28	std

T-312HD

Code **312**

(0.01)



[kg] 27 | [l] 1.5

Per configurazioni non a catalogo contattare Servizio Tecnico-Commerciale
For non-catalog configurations contact Technical-Commercial Service

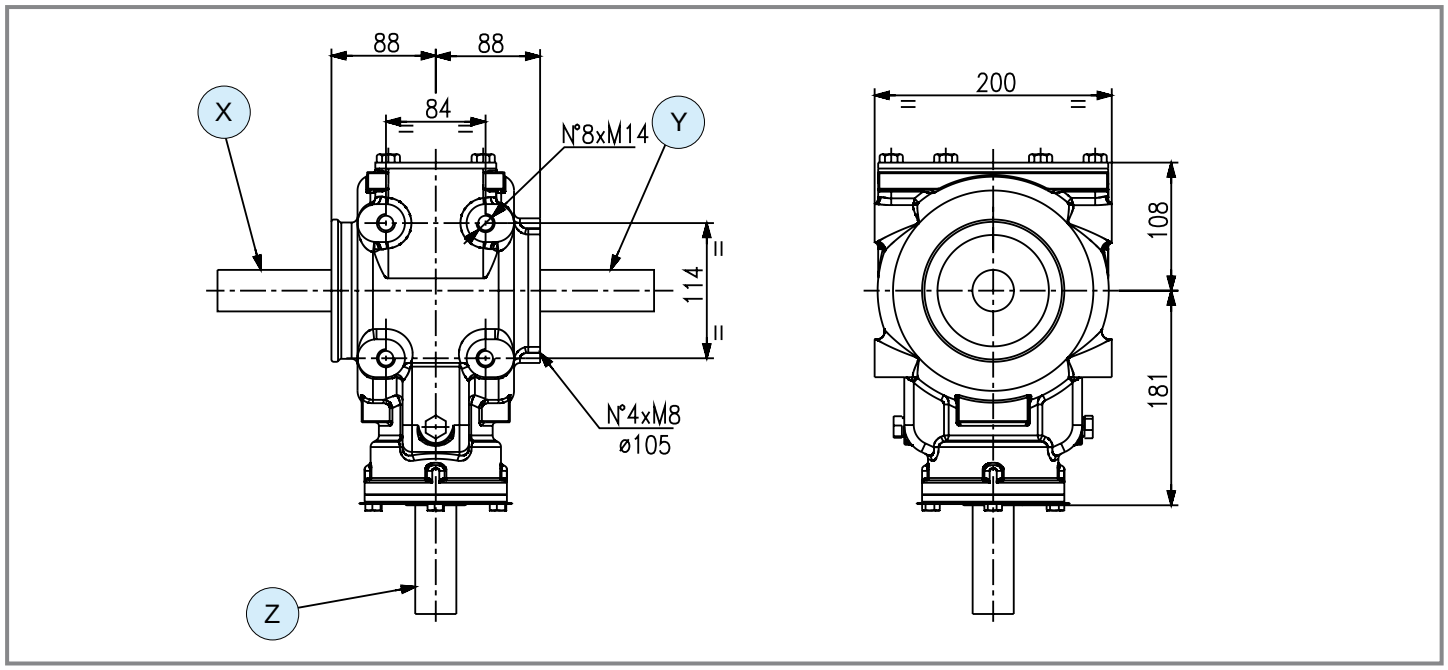

	5 - Rinforzato / Renforced												
	i	N_1 [rpm]	P_1 [kW]	M_2 [Nm]	Shaft type X	Shaft type Y	Shaft type Z	Input	Option	Code	Mounting		
M	**3.91**	1000	50	118	2 1"3/8 Z21	-	2 1"3/8 Z21	X	5	-	21 22	**std**	
	3.17	1000	50	146	2 1"3/8 Z21	-	2 1"3/8 Z21	X	5	-	21 22	**std**	

comer industries

Questa pagina è lasciata intenzionalmente bianca
This page is intentionally left blank

T-290A

Code **290**

(0.01)



[kg] 31 | [l] 2.3

Per configurazioni non a catalogo contattare Servizio Tecnico-Commerciale
For non-catalog configurations contact Technical-Commercial Service

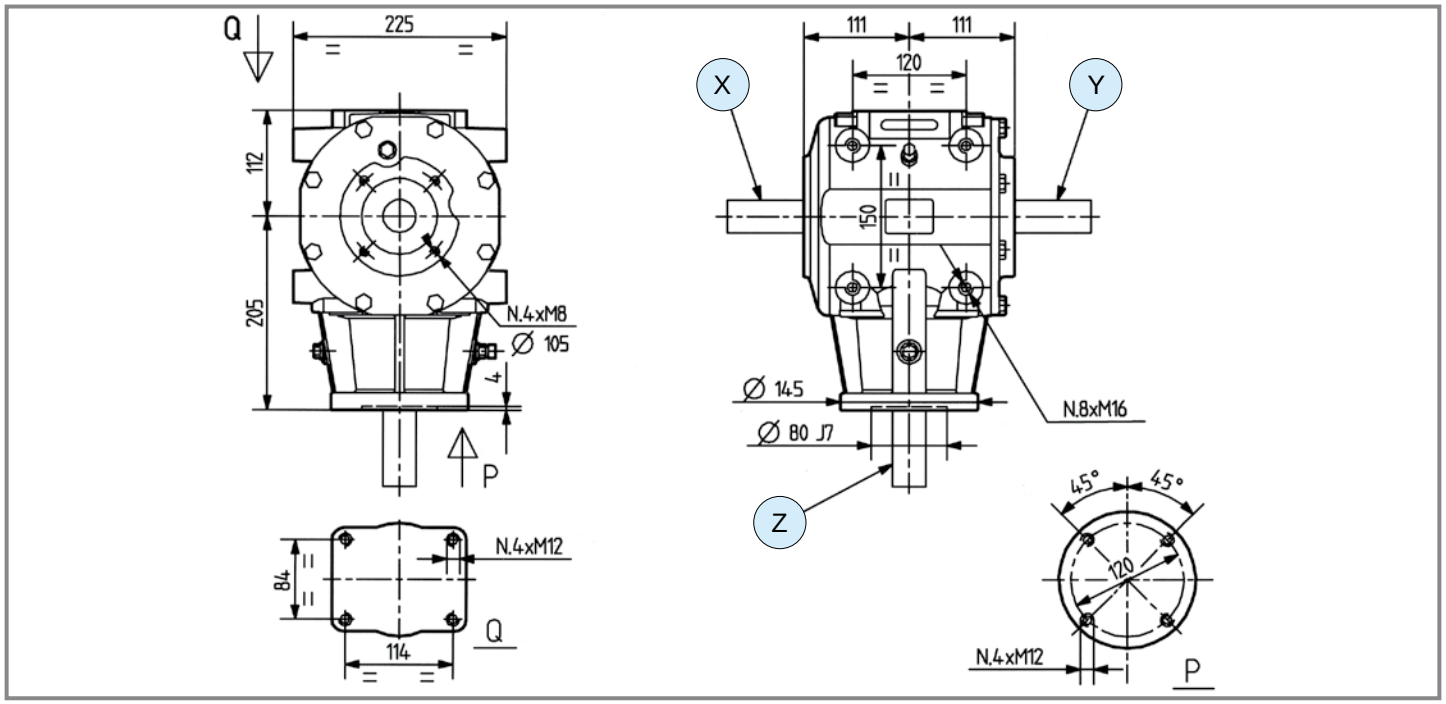

1 - Ruota libera / *Free wheel*

	i	N_1 [rpm]	P_1 [kW]	M_2 [Nm]	Shaft type X	Shaft type Y	Shaft type Z	Input	Option	Code	Mounting	
M	**3.00**	540	57.3	328	1 – 1" 3/8 Z6	1 – 1" 3/8 Z6	1 – 1" 3/8 Z6	Y	-	9.290.023	25 26	std
M	**3.00**	540	57.3	983	1 – 1" 3/8 Z6	-	4 – L 82 – ø 40	X	1	9.290.704	21 22	std
M	**3.00**	540	57.3	983	1 – 1" 3/8 Z6	1 – 1" 3/8 Z6	4 – L 82 – ø 40	X	-	9.290.709	27 28	std
M	**2.42**	540	58.8	417	1 – 1" 3/8 Z6	1 – 1" 3/8 Z6	1 – 1" 3/8 Z6	Y	-	9.290.021	25 26	std
M	**1.86**	540	62.5	576	1 – 1" 3/8 Z6	1 – 1" 3/8 Z6	1 – 1" 3/8 Z6	Y	-	9.290.007	25 26	std
M	**1.86**	540	62.5	576	1 – 1" 3/8 Z6	-	1 – 1" 3/8 Z6	X	-	9.290.008	23 24	std
M	**1.62**	540	65	688	1 – 1" 3/8 Z6	4 – L 82 – ø 40	1 – 1" 3/8 Z6	X	-	9.290.706	27 28	std
M	**1.47**	540	69.8	815	1 – 1" 3/8 Z6	1 – 1" 3/8 Z6	1 – 1" 3/8 Z6	Y	-	9.290.017	25 26	special
-	**1.00**	540	66.2	1135	1 – 1" 3/8 Z6	-	1 – 1" 3/8 Z6	Z	-	9.290.024	1 2	std
-	**1.00**	540	66.2	1135	1 – 1" 3/8 Z6	-	1 – 1" 3/8 Z6	Z	-	9.290.025	3 4	std

T-290A

Code **290**

(0.01)



	i	N_1 [rpm]	P_1 [kW]	M_2 [Nm]	Shaft type X	Shaft type Y	Shaft type Z	Input	Option	Code	Mounting	
-	**1.00**	540	66.2	1135	1 1" 3/8 Z6	1 1" 3/8 Z6	1 1" 3/8 Z6	Z	-	9.290.026	5 6	std
	1.47	540	62.5	1576	1 1" 3/8 Z6	1 1" 3/8 Z6	1 1" 3/8 Z6	Z	-	9.290.017	5 6	special
	1.62	540	60.0	1667	1 1" 3/8 Z6	4 L 82 ø 40	1 1" 3/8 Z6	Z	-	9.290.706	5 6	std
	1.86	540	55.1	1758	1 1" 3/8 Z6	1 1" 3/8 Z6	1 1" 3/8 Z6	Z	-	9.290.007	5 6	std
R	**1.86**	540	55.1	1758	1 1" 3/8 Z6	-	1 1" 3/8 Z6	Z	-	9.290.008	3 4	std
	2.07	540	51.5	1828	1 1" 3/8 Z6	1 1" 3/8 Z6	1 1" 3/8 Z6	Z	-	9.290.009	5 6	special
	2.42	540	41.9	1739	1 1" 3/8 Z6	1 1" 3/8 Z6	1 1" 3/8 Z6	Z	-	9.290.021	5 6	std
	3.00	540	33	1698	1 1" 3/8 Z6	1 1" 3/8 Z6	1 1" 3/8 Z6	Z	-	9.290.023	5 6	std

T-290HD

Code **290**

(0.01)

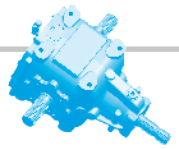

[kg] 41 | [l] 2.3

Per configurazioni non a catalogo contattare Servizio Tecnico-Commerciale
For non-catalog configurations contact Technical-Commercial Service

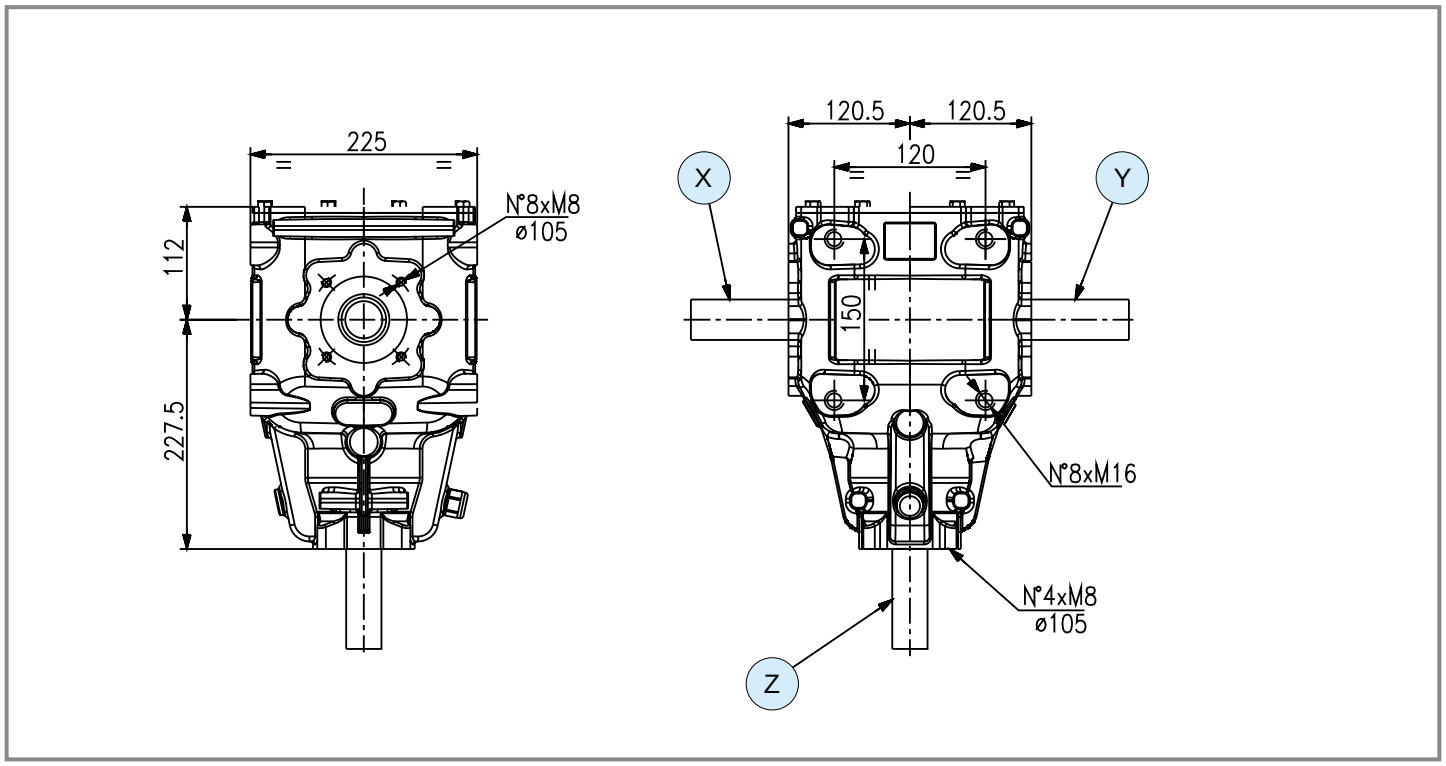

	1 - Ruota libera / *Free wheel* 5 - Rinforzato / *Reinforced*											
	i	N_1 [rpm]	P_1 [kW]	M_2 [Nm]	Shaft type X	Shaft type Y	Shaft type Z	Input	Option	Code	Mounting	
M	**3.00**	1000	96	312	1 — 1" 3/8 Z6	1 — 1" 3/8 Z6	1 — 1" 3/8 Z6	X	1 5	9.290.104	27 28	std
R	**3.00**	1000	58	1694	8 — 40x2x18 DIN5480	8 — 40x2x18 DIN5480	1 — 1" 3/8 Z6	Z	5	9.290.102	5 6	std

comer industries

T-292B

Code **292**

(0.01)



[kg] 33 | [l] 2.5

Per configurazioni non a catalogo contattare Servizio Tecnico-Commerciale
For non-catalog configurations contact Technical-Commercial Service

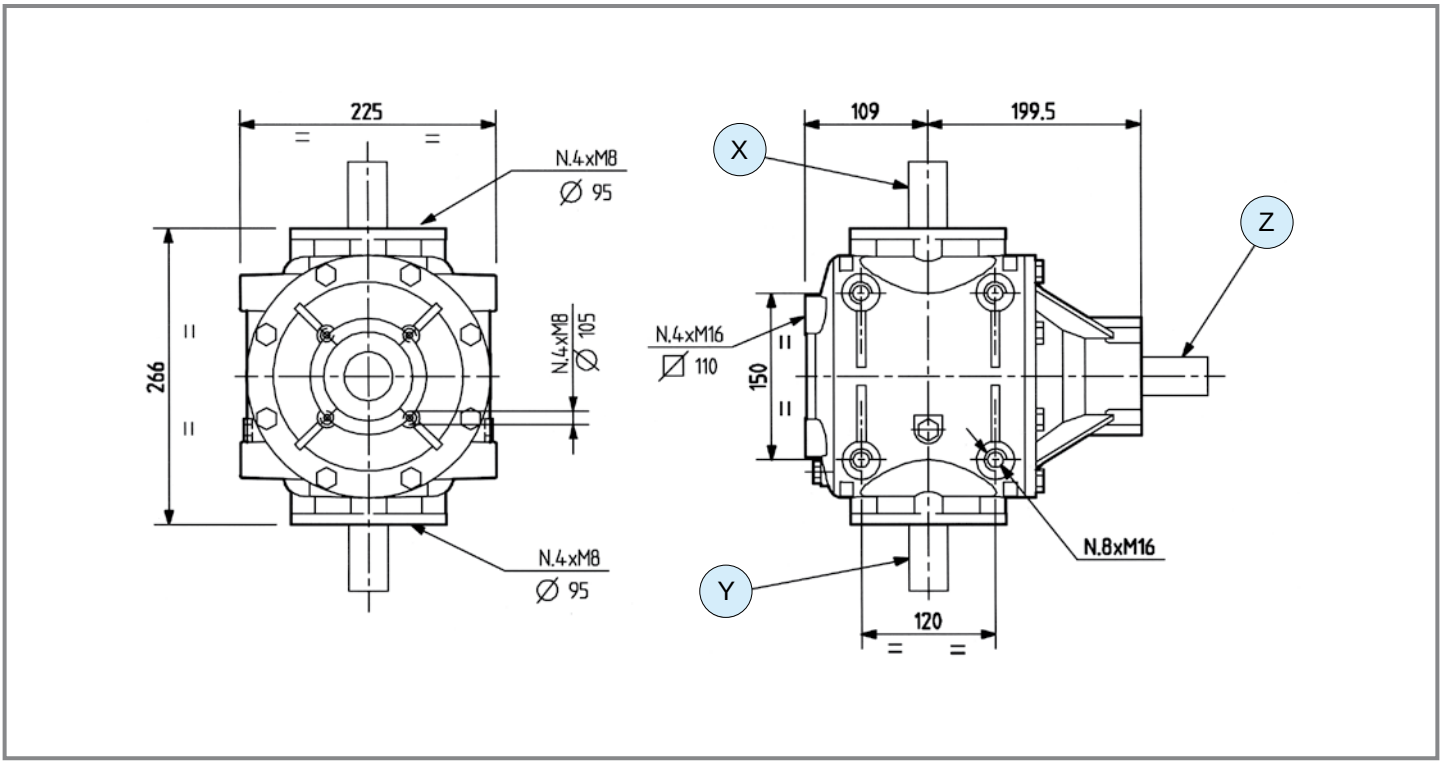

	i	N_1 [rpm]	P_1 [kW]	M_2 [Nm]	Shaft type X	Shaft type Y	Shaft type Z	Input	Option	Code	Mounting	
M	**1.86**	540	58.9	543	1 1" 3/8 Z6	1 1" 3/8 Z6	1 1" 3/8 Z6	Z	-	9.292.006	33 34	std
M	**1.86**	540	58.9	543	4 shaft 1"3/4 Z6			Z	-	9.292.210	-	std
M	**1.47**	540	66.2	772	1 1" 3/8 Z6	1 1" 3/8 Z6	1 1" 3/8 Z6	Z	-	9.292.005	33 34	special
-	**1.00**	540	66.2	1135	1 1" 3/8 Z6	1 1" 3/8 Z6	1 1" 3/8 Z6	Z	-	9.292.004	33 34	std
R	**1.47**	540	62.5	1576	1 1" 3/8 Z6	1 1" 3/8 Z6	1 1" 3/8 Z6	X	-	9.292.005	11 12	special
R	**1.86**	540	47.5	1515	1 1" 3/8 Z6	1 1" 3/8 Z6	1 1" 3/8 Z6	X	-	9.292.024	11 12	std

T-279A | T-279J

Code 279 | Code 279.8

(0.01)



[kg] 37 | [l] 2.5

Per configurazioni non a catalogo contattare Servizio Tecnico-Commerciale
For non-catalog configurations contact Technical-Commercial Service

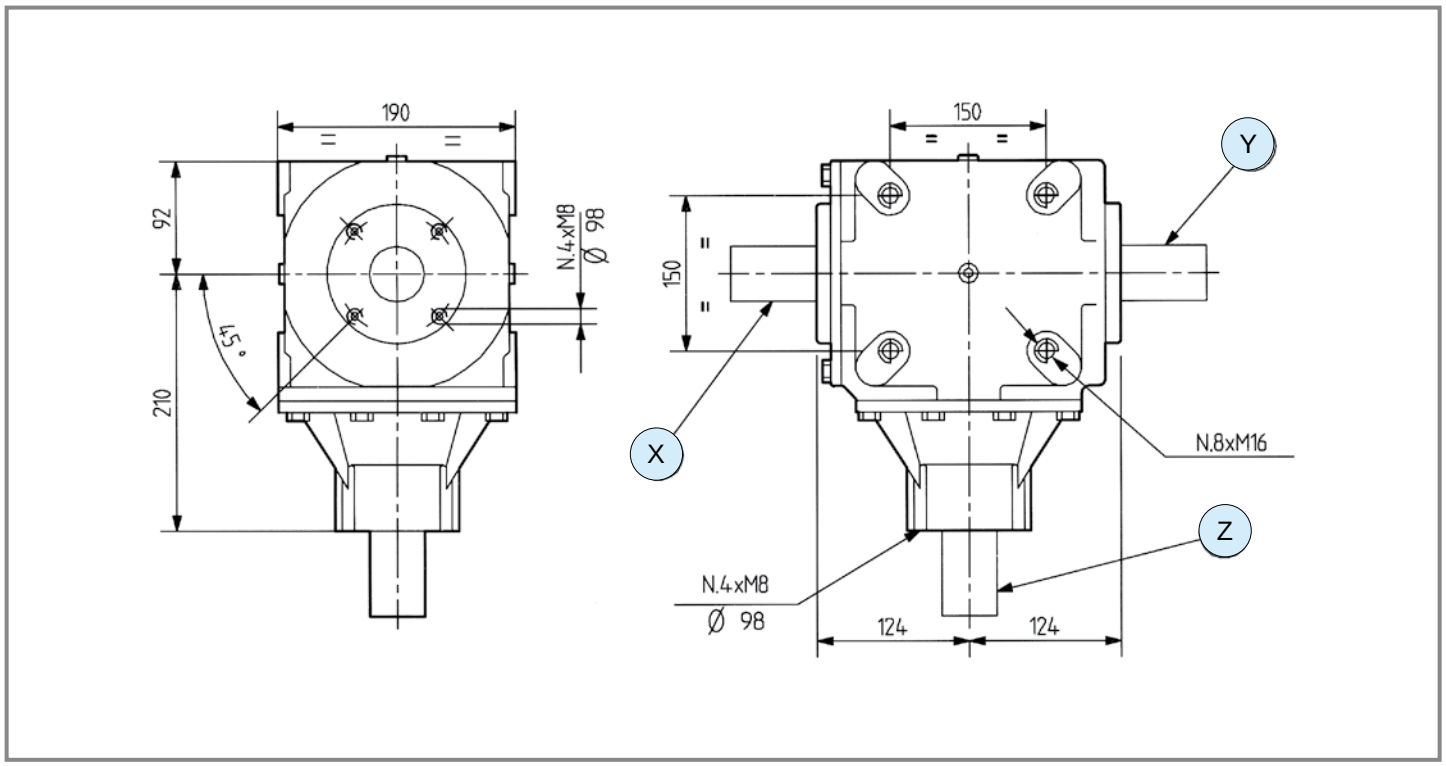

1 - Ruota libera / *Free wheel*

	i	N_1 [rpm]	P_1 [kW]	M_2 [Nm]	Shaft type X	Shaft type Y	Shaft type Z	Input	Option	Code	Mounting	
M ⇨ +	**1.50**	540	66.2	757	1 – 1" 3/8 Z6	1 – 1" 3/8 Z6	1 – 1" 3/8 Z6	Y	-	9.279.857	27 28	std
	1.50	540	66.2	757	1 – 1" 3/8 Z6	1 – 1" 3/8 Z6	1 – 1" 3/8 Z6	Y	1	9.279.875	27 28	std
	1.50	540	66.2	757	2 – 1" 3/8 Z21	2 – 1" 3/8 Z21	6 – 1" 3/4 Z20	Z	-	9.279.878	5 6	std
	1.35	540	73.5	934	1 – 1" 3/8 Z6	1 – 1" 3/8 Z6	1 – 1" 3/8 Z6	Z	-	9.279.016	33 34	std
	1.35	540	73.5	934	1 – 1" 3/8 Z6	-	1 – 1" 3/8 Z6	X	-	9.279.040	23 24	std
	1.35	540	73.5	934	1 – 1" 3/8 Z6	-	3 – L 82, ø 35	X	-	9.279.041	21 22	std
	1.35	540	73.5	934	6 – 1" 3/4 Z20	6 – 1" 3/4 Z20	6 – 1" 3/4 Z20	Z	-	9.279.852	5 6	std

comer industries

T-279A
Code **279**

T-279J
Code **279.8**

(0.01)



	i	N_1 [rpm]	P_1 [kW]	M_2 [Nm]	Shaft type X	Shaft type Y	Shaft type Z	Input	Option	Code	Mounting	
-	**1.00**	540	73.5	1261	1 1" 3/8 Z6	1 1" 3/8 Z6	1 1" 3/8 Z6	Z	-	9.279.013	5 6	std
-	**1.00**	540	73.5	1261	1 1" 3/8 Z6	1 1" 3/8 Z6	1 1" 3/8 Z6	Z	-	9.279.023	5 6	std
-	**1.00**	540	73.5	1261	1 1" 3/8 Z6	1 1" 3/8 Z6	5 1" 3/4 Z6	Z	-	9.279.027	5 6	std
R	**1.35**	540	66.2	1533	1 1" 3/8 Z6	1 1" 3/8 Z6	1 1" 3/8 Z6	Z	-	9.279.012	5 6	std
R	**1.35**	540	66.2	1532	1 1" 3/8 Z6	1 1" 3/8 Z6	6 1" 3/4 Z20	-	-	9.279.045	5 6	std
R	**1.50**	540	58.9	1513	1 1" 3/8 Z6	1 1" 3/8 Z6	1 1" 3/8 Z6	Z	-	9.279.857	5 6	std
R	**1.50**	540	58.9	1513	2 1" 3/8 Z21	2 1" 3/8 Z21	6 1" 3/4 Z20	X	-	9.279.878	13 14	std

T-22A

Code **262**

(0.01)



[kg] 29 | [l] 3.1

Per configurazioni non a catalogo contattare Servizio Tecnico-Commerciale
For non-catalog configurations contact Technical-Commercial Service

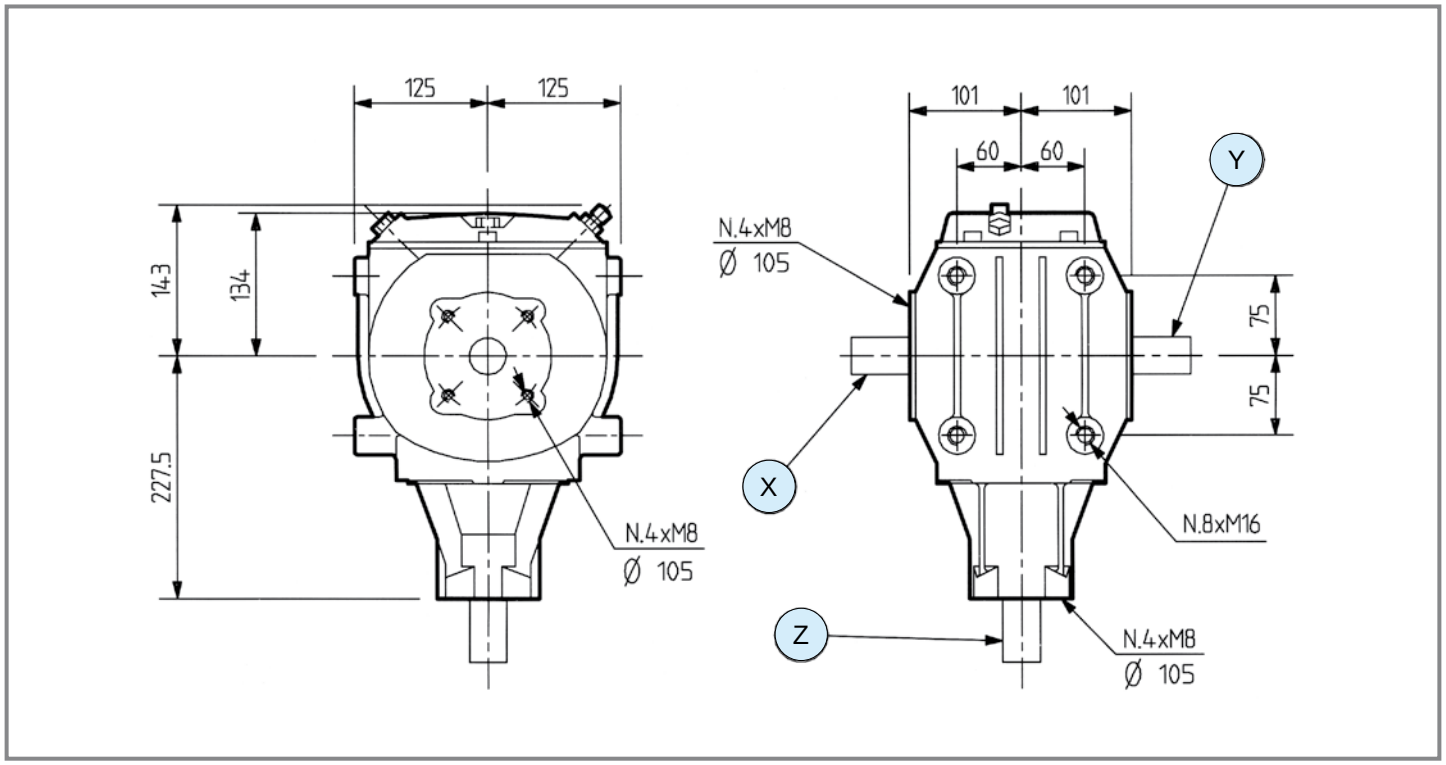

	i	N_1 [rpm]	P_1 [kW]	M_2 [Nm]	Shaft type X	Shaft type Y	Shaft type Z	Input	Option	Code	Mounting	
M	**6.14**	540	36.8	103	1 1" 3/8 Z6	1 1" 3/8 Z6	1 1" 3/8 Z6	Y	-	9.262.000	27 28	special
	4.11	540	44.2	184	5 1" 3/4 Z6	5 1" 3/4 Z6	1 1" 3/8 Z6	X	-	9.262.009	25 26	special
	4.11	540	44.2	184	1 1" 3/8 Z6	1 1" 3/8 Z6	1 1" 3/8 Z6	Y	-	9.262.027	27 28	special
	3.00	540	62.6	358	1 1" 3/8 Z6	1 1" 3/8 Z6	1 1" 3/8 Z6	Y	-	9.262.004	21 22	std
	3.00	540	62.6	358	1 1" 3/8 Z6	1 1" 3/8 Z6	1 1" 3/8 Z6	X	-	9.262.008	25 26	std
	2.42	540	62.6	358	1 1" 3/8 Z6	-	1 1" 3/8 Z6	Y	-	9.262.022	21 22	std
	1.93	540	72.1	641	1 1" 3/8 Z6	1 1" 3/8 Z6	1 1" 3/8 Z6	X	-	9.262.007	25 26	std
	1.60	540	72.1	641	1 1" 3/8 Z6	1 1" 3/8 Z6	1 1" 3/8 Z6	X	-	9.262.051	25 26	std

comer industries

T-22A

Code **262**

(0.01)



	i	N_1 [rpm]	P_1 [kW]	M_2 [Nm]	Shaft type X	Shaft type Y	Shaft type Z	Input	Option	Code	Mounting	
	1.60	540	66.2	1817	1 1" 3/8 Z6	1 1" 3/8 Z6	1 1" 3/8 Z6	Z	-	9.262.051	5 6	std
	1.93	540	60.4	1999	1 1" 3/8 Z6	1 1" 3/8 Z6	1 1" 3/8 Z6	Z	-	9.262.007	5 6	std
	2.42	540	47.8	1984	1 1" 3/8 Z6	-	1 1" 3/8 Z6	Z	-	9.262.022	1 2	std
	3.00	540	39.0	2007	1 1" 3/8 Z6	-	1 1" 3/8 Z6	Z	-	9.262.004	1 2	std
R	**3.00**	540	39.0	2007	1 1" 3/8 Z6	1 1" 3/8 Z6	1 1" 3/8 Z6	Z	-	9.262.008	5 6	std
	4.11	540	27.2	1917	5 1" 3/4 Z6	5 1" 3/4 Z6	1 1" 3/8 Z6	Z	-	9.262.009	5 6	special
	4.11	540	27.2	1917	1 1" 3/8 Z6	1 1" 3/8 Z6	1 1" 3/8 Z6	Z	-	9.262.027	5 6	special
	6.14	540	14.7	1548	1 1" 3/8 Z6	1 1" 3/8 Z6	1 1" 3/8 Z6	Z	-	9.262.000	5 6	special
	6.14	540	14.7	1548	1 1" 3/8 Z6	1 1" 3/8 Z6	1 1" 3/8 Z6	Z	-	9.262.000	5 6	special

T-269A

Code **269**

(0.01)



[kg] 48 | [l] 3.25

Per configurazioni non a catalogo contattare Servizio Tecnico-Commerciale
For non-catalog configurations contact Technical-Commercial Service

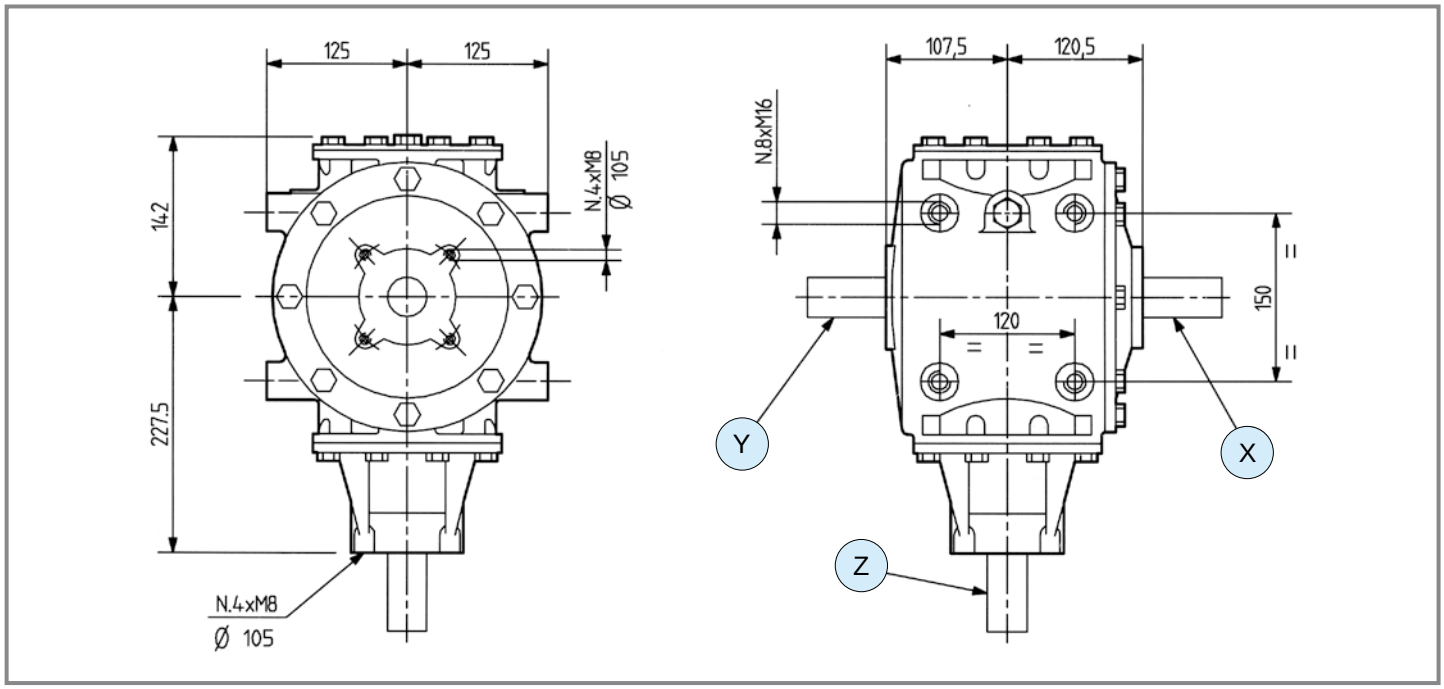

	i	N_1 [rpm]	P_1 [kW]	M_2 [Nm]	Shaft type X	Shaft type Y	Shaft type Z	Input	Option	Code	Mounting	
M	**1.63**	540	77.3	813	5 — 1" 3/4 Z6	1 — 1" 3/8 Z6	1 — 1" 3/8 Z6	Y	-	9.269.025	25 / 26	special
M	1.42	540	77.3	934	1 — 1" 3/8 Z6	1 — 1" 3/8 Z6	1 — 1" 3/8 Z6	Y	-	9.269.006	25 / 26	std
M	1.35	540	73.5	934	1 — 1" 3/8 Z6	1 — 1" 3/8 Z6	1 — 1" 3/8 Z6	Y	-	9.269.263	25 / 26	std
-	1.00	540	73.5	1261	1 — 1" 3/8 Z6	-	1 — 1" 3/8 Z6	Z	-	9.269.002	3 / 4	std
-	1.00	540	73.5	1261	5 — 1" 3/4 Z6	1 — 1" 3/8 Z6	1 — 1" 3/8 Z6	Z	-	9.269.001	5 / 6	st
R	1.35	540	66.2	1533	1 — 1" 3/8 Z6	1 — 1" 3/8 Z6	1 — 1" 3/8 Z6	Z	-	9.269.263	5 / 6	std
R	1.42	540	66.2	1612	1 — 1" 3/8 Z6	1 — 1" 3/8 Z6	1 — 1" 3/8 Z6	Z	-	9.269.006	5 / 6	std
R	1.63	540	62.5	1747	1 — 1" 3/8 Z6	1 — 1" 3/8 Z6	1 — 1" 3/8 Z6	Z	-	9.269.025	5 / 6	special

comer industries

T-269B

Code **269**

(0.01)



[kg] 40 | [l] 3.3

Per configurazioni non a catalogo contattare Servizio Tecnico-Commerciale
For non-catalog configurations contact Technical-Commercial Service

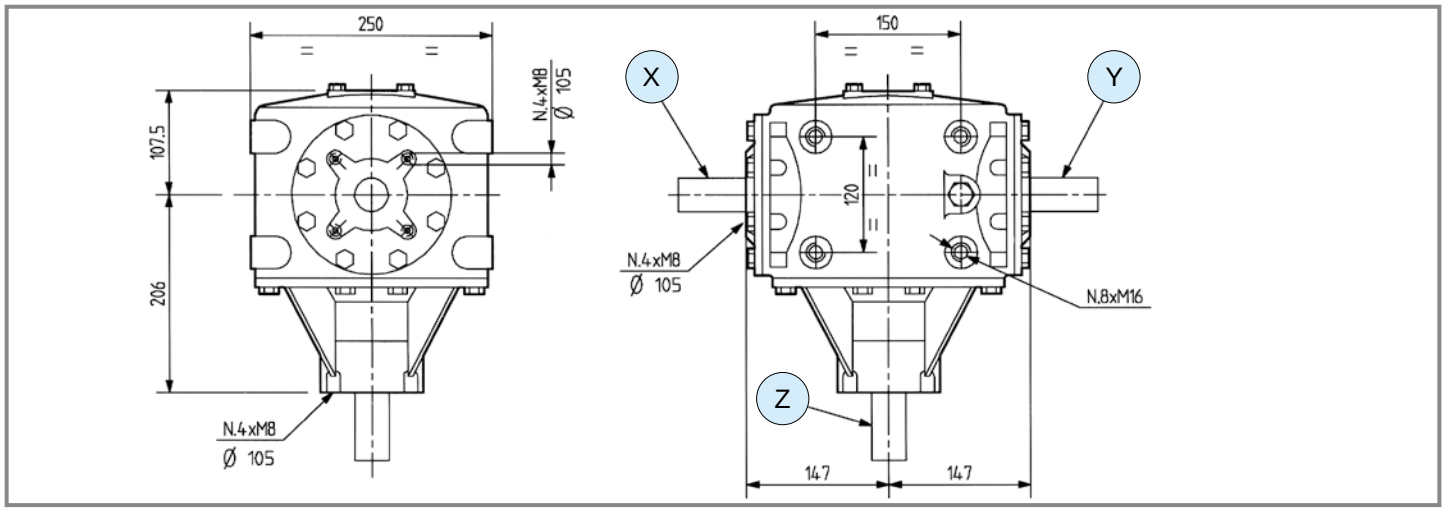

1 - Ruota libera / *Free wheel*

	i	N_1 [rpm]	P_1 [kW]	M_2 [Nm]	Shaft type X	Shaft type Y	Shaft type Z	Input	Option	Code	Mounting	
M	**3.00**	540	62.2	356	5 – 1" 3/4 Z6	1 – 1" 3/8 Z6	1 – 1" 3/8 Z6	Z	-	9.269.010	33 34	std
M	2.42	540	62.2	441	1 – 1" 3/8 Z6	1 – 1" 3/8 Z6	1 – 1" 3/8 Z6	Z	-	9.269.009	33 34	std
M	1.93	540	72.1	641	1 – 1" 3/8 Z6	1 – 1" 3/8 Z6	1 – 1" 3/8 Z6	Z	-	9.269.008	11 12	std
M	1.93	540	72.1	641	1 – 1" 3/8 Z6	1 – 1" 3/8 Z6	1 – 1" 3/8 Z6	Z	-	9.269.223	33 34	special
M	1.63	540	77.3	813	5 – 1" 3/4 Z6	1 – 1" 3/8 Z6	1 – 1" 3/8 Z6	Z	-	9.269.014	33 34	special
M	1.63	540	77.3	813	1 – 1" 3/8 Z6	1 – 1" 3/8 Z6	1 – 1" 3/8 Z6	Z	1	9.269.221	33 34	special
M	1.42	540	77.3	934	1 – 1" 3/8 Z6	1 – 1" 3/8 Z6	1 – 1" 3/8 Z6	Z	-	9.269.007	33 34	std
-	1.00	540	73.5	1261	1 – 1" 3/8 Z6	1 – 1" 3/8 Z6	1 – 1" 3/8 Z6	Z	1	9.269.219	5 6	std
-	1.00	540	73.5	1261	1 – 1" 3/8 Z6	1 – 1" 3/8 Z6	1 – 1" 3/8 Z6	Z	-	9.269.032	5 6	std
R	1.42	540	66.2	1612	1 – 1" 3/8 Z6	1 – 1" 3/8 Z6	1 – 1" 3/8 Z6	Y	-	9.269.007	11 12	std
R	1.63	540	62.6	1750	5 – 1" 3/4 Z6	1 – 1" 3/8 Z6	1 – 1" 3/8 Z6	Y	-	9.269.014	11 12	special
R	1.93	540	60.4	1999	1 – 1" 3/8 Z6	1 – 1" 3/8 Z6	1 – 1" 3/8 Z6	Y	-	9.269.008	11 12	std
R	2.42	540	47.8	1984	1 – 1" 3/8 Z6	1 – 1" 3/8 Z6	1 – 1" 3/8 Z6	Y	-	9.269.009	11 12	std
R	3.00	540	39.0	2007	1 – 1" 3/8 Z6	1 – 1" 3/8 Z6	1 – 1" 3/8 Z6	Y	-	9.269.010	11 12	std

T-301B

Code **301**

(0.01)



[kg] 61.5 | [l] 4.4

Per configurazioni non a catalogo contattare Servizio Tecnico-Commerciale
For non-catalog configurations contact Technical-Commercial Service

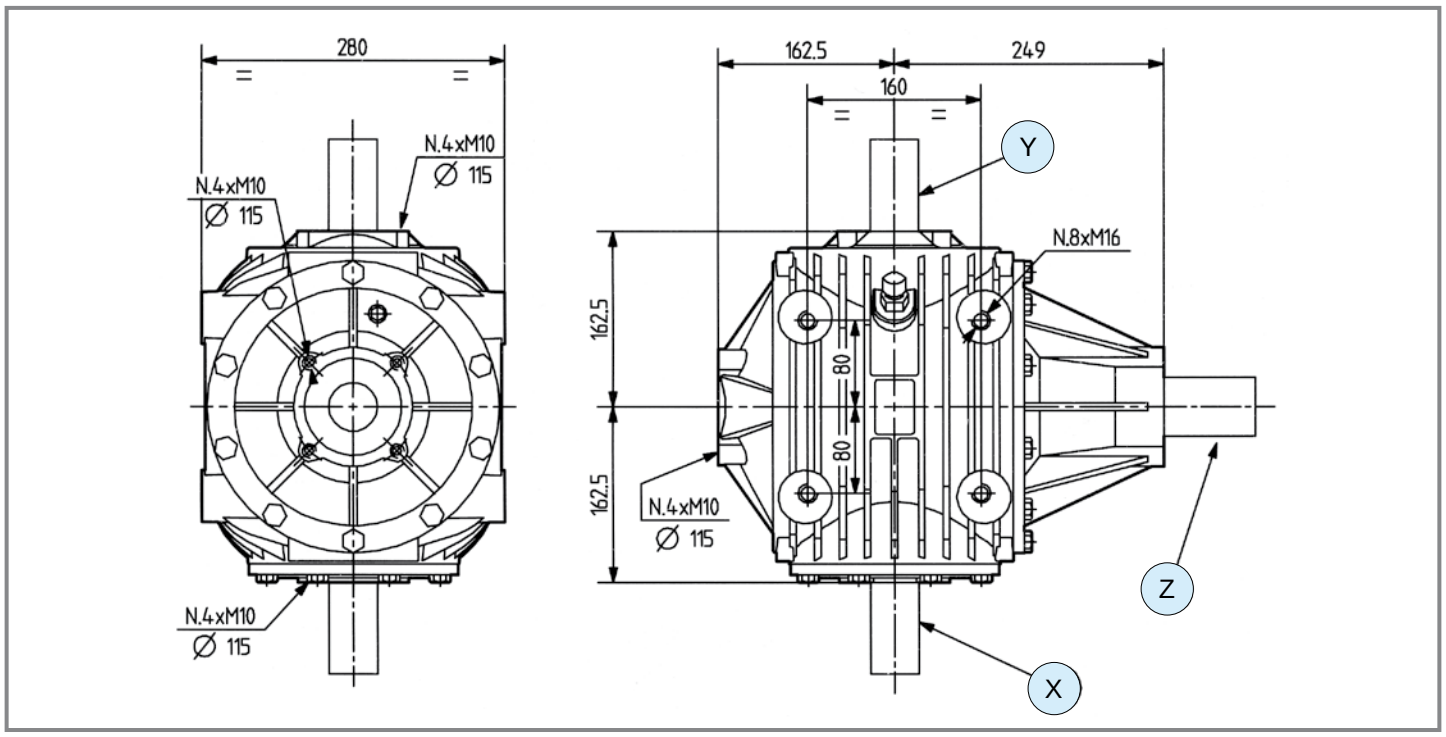

1 - Ruota libera / *Free wheel*

	i	N_1 [rpm]	P_1 [kW]	M_2 [Nm]	Shaft type X	Shaft type Y	Shaft type Z	Input	Option	Code	Mounting	
	3.00	540	53.0	303	5 – 1" 3/4 Z6	5 – 1" 3/4 Z6	5 – 1" 3/4 Z6	Y	-	9.301.001	27 28	special
	2.42	540	65.0	460	5 – 1" 3/4 Z6	5 – 1" 3/4 Z6	5 – 1" 3/4 Z6	Z	-	9.301.267	33 34	special
	1.93	540	80.9	719	5 – 1" 3/4 Z6	5 – 1" 3/4 Z6	5 – 1" 3/4 Z6	Z	1	9.301.045	33 34	std
	1.93	540	80.9	719	5 – 1" 3/4 Z6	5 – 1" 3/4 Z6	5 – 1" 3/4 Z6	Y	-	9.301.011	33 34	std
M ⇨ +	**1.60**	540	95.6	1025	5 – 1" 3/4 Z6	5 – 1" 3/4 Z6	5 – 1" 3/4 Z6	Y	-	9.301.008	25 26	std
	1.60	540	79.9	857	5 – 1" 3/4 Z6	5 – 1" 3/4 Z6	5 – 1" 3/4 Z6	Z	-	9.301.006	33 34	std
	1.35	540	102.9	1307	1 – 1" 3/8 Z6	1 – 1" 3/8 Z6	5 – 1" 3/4 Z6	Z	-	9.301.058	33 34	std
	1.35	540	90.6	1151	4 shaft 1"3/4 Z6			Z	-	9.301.233	-	std
	1.35	540	79.7	1013	5 – 1" 3/4 Z6	5 – 1" 3/4 Z6	5 – 1" 3/4 Z6	X	1	9.301.280	33 34	std

comer industries

T-301B

Code **301**

(0.01)



		1 - Ruota libera / *Free wheel*										
		i	N_1 [rpm]	P_1 [kW]	M_2 [Nm]	Shaft type X	Shaft type Y	Shaft type Z	Input	Option	Code	Mounting
-		**1.00**	540	110.3	1892	5 1" 3/4 Z6	5 1" 3/4 Z6	5 1" 3/4 Z6	Z	-	9.301.016	5 6 std
-		**1.00**	540	110.3	1892	4 shaft 1"3/4 Z6			X	-	9.301.037	- std
-		**1.00**	540	133.3	2287	6 1" 3/4 Z20	6 1" 3/4 Z20	6 1" 3/4 Z20	Z	1	9.301.346	5 6 std
R		**1.35**	540	95.6	2213	5 1" 3/4 Z6	5 1" 3/4 Z6	5 1" 3/4 Z6	Z	-	9.301.276	5 6 std
R		**1.60**	540	88.2	2420	5 1" 3/4 Z6	5 1" 3/4 Z6	5 1" 3/4 Z6	Z	-	9.301.008	5 6 std
R		**1.60**	540	88.2	2420	5 1" 3/4 Z6	-	5 1" 3/4 Z6	Z	-	9.301.031	3 4 std
R		**1.93**	540	77.2	2555	5 1" 3/4 Z6	5 1" 3/4 Z6	5 1" 3/4 Z6	Z	-	9.301.032	5 6 std
R		**1.93**	540	77.2	2555	4 shaft 1"3/4 Z6			X	-	9.301.038	- std
R		**2.42**	540	59.0	2449	5 1" 3/4 Z6	5 1" 3/4 Z6	5 1" 3/4 Z6	Y	-	9.301.267	13 14 special
R		**3.00**	540	45.6	2424	5 1" 3/4 Z6	5 1" 3/4 Z6	5 1" 3/4 Z6	Z	-	9.301.001	5 6 special

T-331A

Code **331**

(0.01)

[kg] 112 | [l]

Per configurazioni non a catalogo contattare Servizio Tecnico-Commerciale
For non-catalog configurations contact Technical-Commercial Service

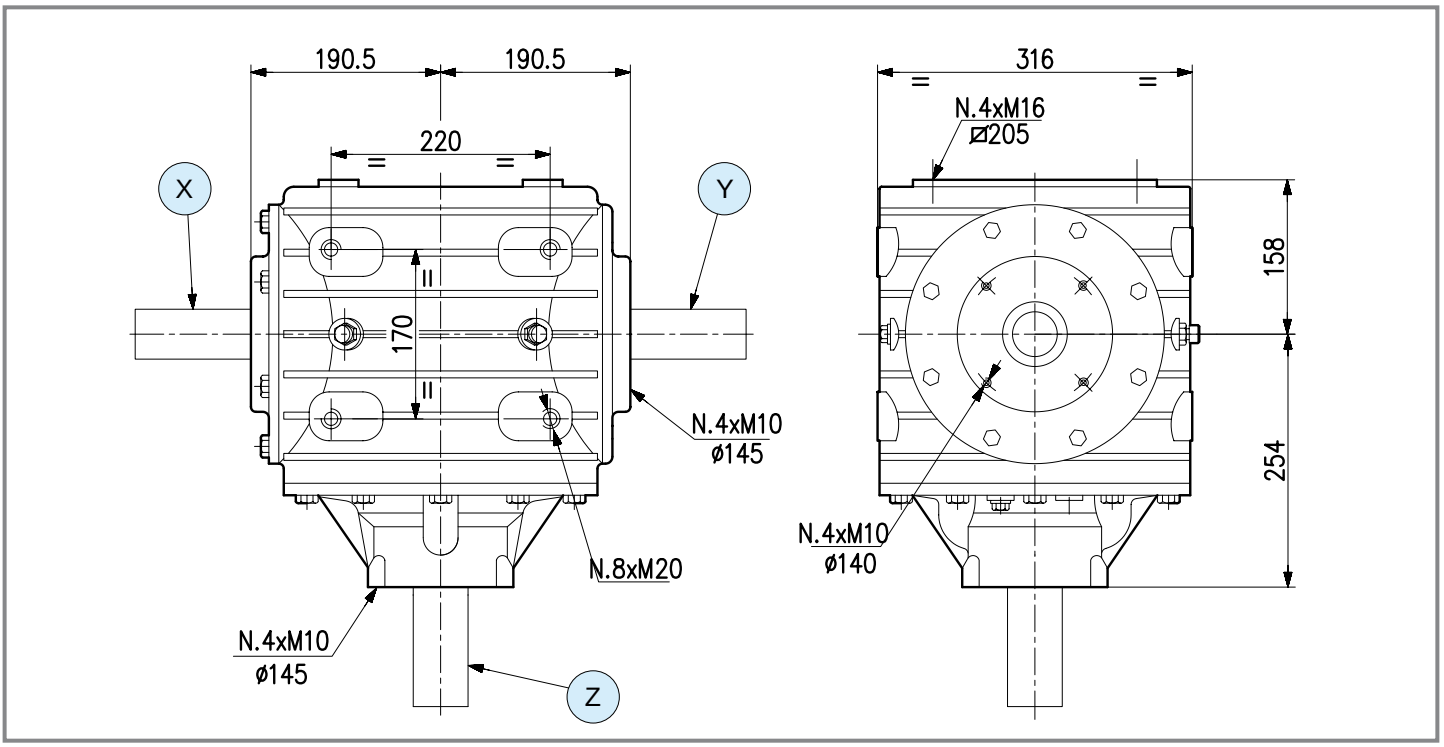

1 - Ruota libera / *Free wheel*

	i	N_1 [rpm]	P_1 [kW]	M_2 [Nm]	Shaft type X	Shaft type Y	Shaft type Z	Input	Option	Code	Mounting	
M	**3.27**	540	150.0	787	5 1" 3/4 Z6	5 1" 3/4 Z6	5 1" 3/4 Z6	X	-	9.331.020	25 26	special
	1.94	540	183.8	5990	5 1" 3/4 Z6	5 1" 3/4 Z6	6 1" 3/4 Z20	Z	-	9.331.001	33 34	std
	1.53	1000	242.0	1465	6 1" 3/4 Z20	6 1" 3/4 Z20	6 1" 3/4 Z20	Z	1	9.331.206	33 34	special
	1.35	1000	205.9	1413	6 1" 3/4 Z20	6 1" 3/4 Z20	6 1" 3/4 Z20	Z	1	9.331.012	33 34	std
-	**1.00**	540	176.5	3027	5 1" 3/4 Z6	5 1" 3/4 Z6	6 1" 3/4 Z20	Z	-	9.331.002	5 6	std
	1.00	1000	264.7	2452								std
	1.00	540	176.5	3027	6 1" 3/4 Z20	6 1" 3/4 Z20	6 1" 3/4 Z20	Z	-	9.331.019	5 6	std
	1.00	1000	264.7	2452								std
	1.00	540	176.5	3027	5 1" 3/4 Z6	5 1" 3/4 Z6	5 1" 3/4 Z6	Z	-	9.331.016	5 6	std
	1.00	1000	264.7	2452								std

comer industries

T-331A

Code **331**

(0.01)



1 - Ruota libera / *Free wheel* 4 - Attacco pompa / *Pump*

	i	N_1 [rpm]	P_1 [kW]	M_2 [Nm]	Shaft type X	Shaft type Y	Shaft type Z	Input	Option	Code	Mounting	
-	**1.00**	540	176.5	3027	6 1" 3/4 Z20	6 1" 3/4 Z20	6 1" 3/4 Z20	Z	1	9.331.019	5 6	std
-	**1.00**	1000	264.7	2452								std
-	**1.00**	1000	264.7	2452	5 1" 3/4 Z6	5 1" 3/4 Z6	6 1" 3/4 Z20	Z	4	9.331.204	5 6	std
R	**1.35**	1000	205.9	2574	6 1" 3/4 Z20	6 1" 3/4 Z20	6 1" 3/4 Z20	Y	-	9.331.012	5 6	std
R	**1.35**	1000	205.9	2574	5 1" 3/4 Z6	5 1" 3/4 Z6	6 1" 3/4 Z20	Z	-	9.331.052	5 6	std
R	**1.94**	540	147.0	4891	5 1" 3/4 Z6	5 1" 3/4 Z6	5 1" 3/4 Z6	Z	-	9.331.001	5 6	std
R	**3.27**	540	80.9	4537	5 1" 3/4 Z6	5 1" 3/4 Z6	5 1" 3/4 Z6	Z	-	9.331.020	5 6	special

T-332A

Code **332**

(0.01)



[kg] 118 | [I]

Per configurazioni non a catalogo contattare Servizio Tecnico-Commerciale
For non-catalog configurations contact Technical-Commercial Service

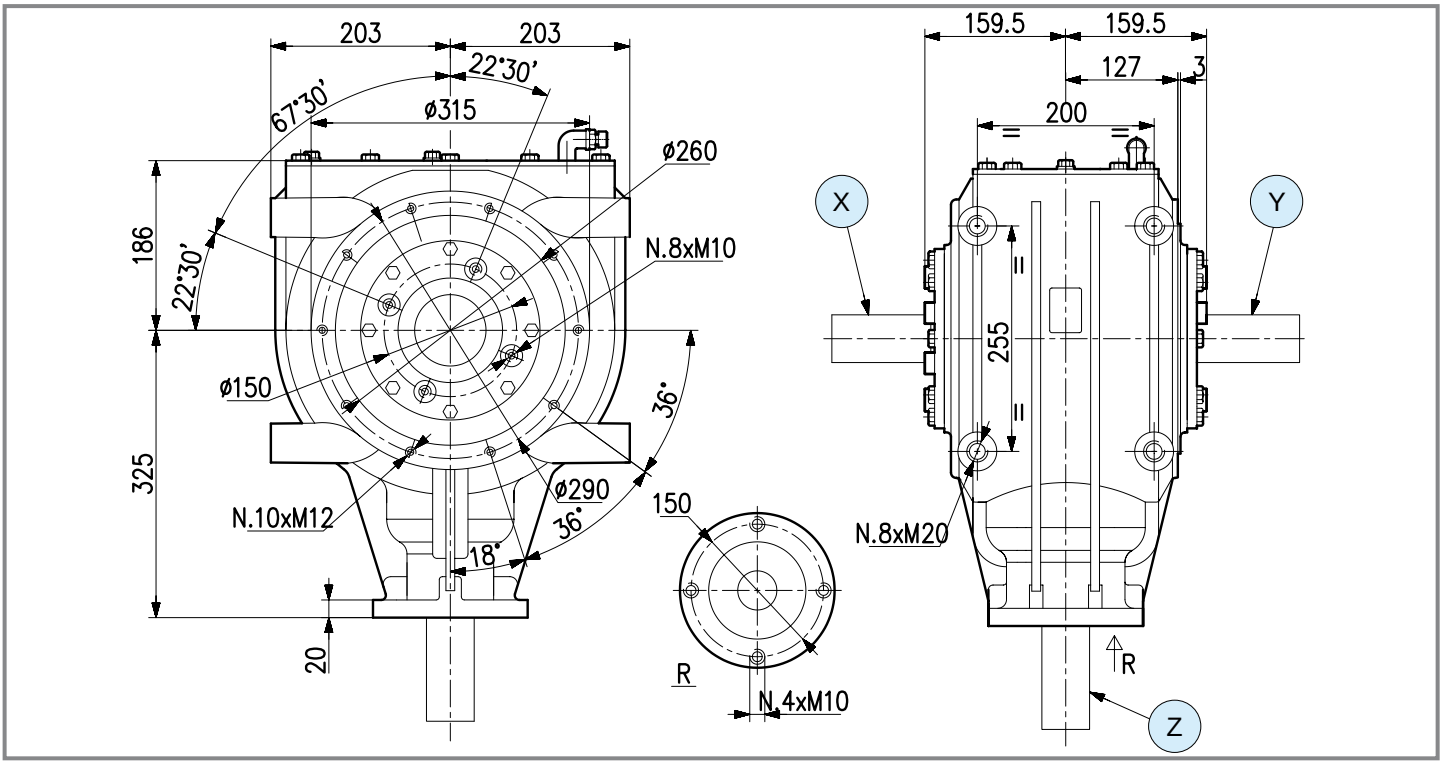

1 - Ruota libera / *Free wheel* 4 - Attacco pompa / *Pump*

	i	N_1 [rpm]	P_1 [kW]	M_2 [Nm]	Shaft type X	Shaft type Y	Shaft type Z	Input	Option	Code	Mounting	
M	**1.94**	1000	257	4618	6 — 1" 3/4 Z20	6 — 1" 3/4 Z20	6 — 1" 3/4 Z20	y	-	9.332.206	27 28	std
R	**1.94**	540	183.8	5990	6 — 1" 3/4 Z20	6 — 1" 3/4 Z20	6 — 1" 3/4 Z20	Z	-	9.332.000	5 6	std
	1.94	1000	257.3	4528								std
	1.94	1000	257	4618	6 — 1" 3/4 Z20	6 — 1" 3/4 Z20	6 — 1" 3/4 Z20	Z	1	9.332.207	5 6	std
	1.94	540	183.8	6116	6 — 1" 3/4 Z20	6 — 1" 3/4 Z20	6 — 1" 3/4 Z20	Y	4	9.332.208	5 6	std
	1.94	1000	257.8	4632								std
	2.50	1000	220.5	5105	6 — 1" 3/4 Z20	6 — 1" 3/4 Z20	6 — 1" 3/4 Z20	Z	-	9.332.205	5 6	std
	2.50	1000	220.5	5105	35 — 65x60 DIN5482	35 — 65x60 DIN5482	6 — 1" 3/4 Z20	Z	-	9.332.010	5 6	std
	3.00	540	125	6432	35 — 65x60 DIN5482	35 — 65x60 DIN5482	6 — 1" 3/4 Z20	Z	-	9.332.006	5 6	std

comer industries

T-332A

Code **332**

(0.01)



	i	N_1 [rpm]	P_1 [kW]	M_2 [Nm]	Shaft type X	Shaft type Y	Shaft type Z	Input	Option	Code	Mounting	
R	**3.00**	540	125	6432	6 — 1" 3/4 Z20	6 — 1" 3/4 Z20	6 — 1" 3/4 Z20	Z	-	9.332.003	5 6	std
	3.00	1000	176.4	4901								std
	4.25	540	77.2	5627	6 — 1" 3/4 Z20	6 — 1" 3/4 Z20	6 — 1" 3/4 Z20	Z	-	9.332.002	5 6	special
	4.25	1000	114	4487								special
	4.25	540	77.2	5627	35 — 65x60 DIN5482	35 — 65x60 DIN5482	6 — 1" 3/4 Z20	Z	-	9.332.004	5 6	special

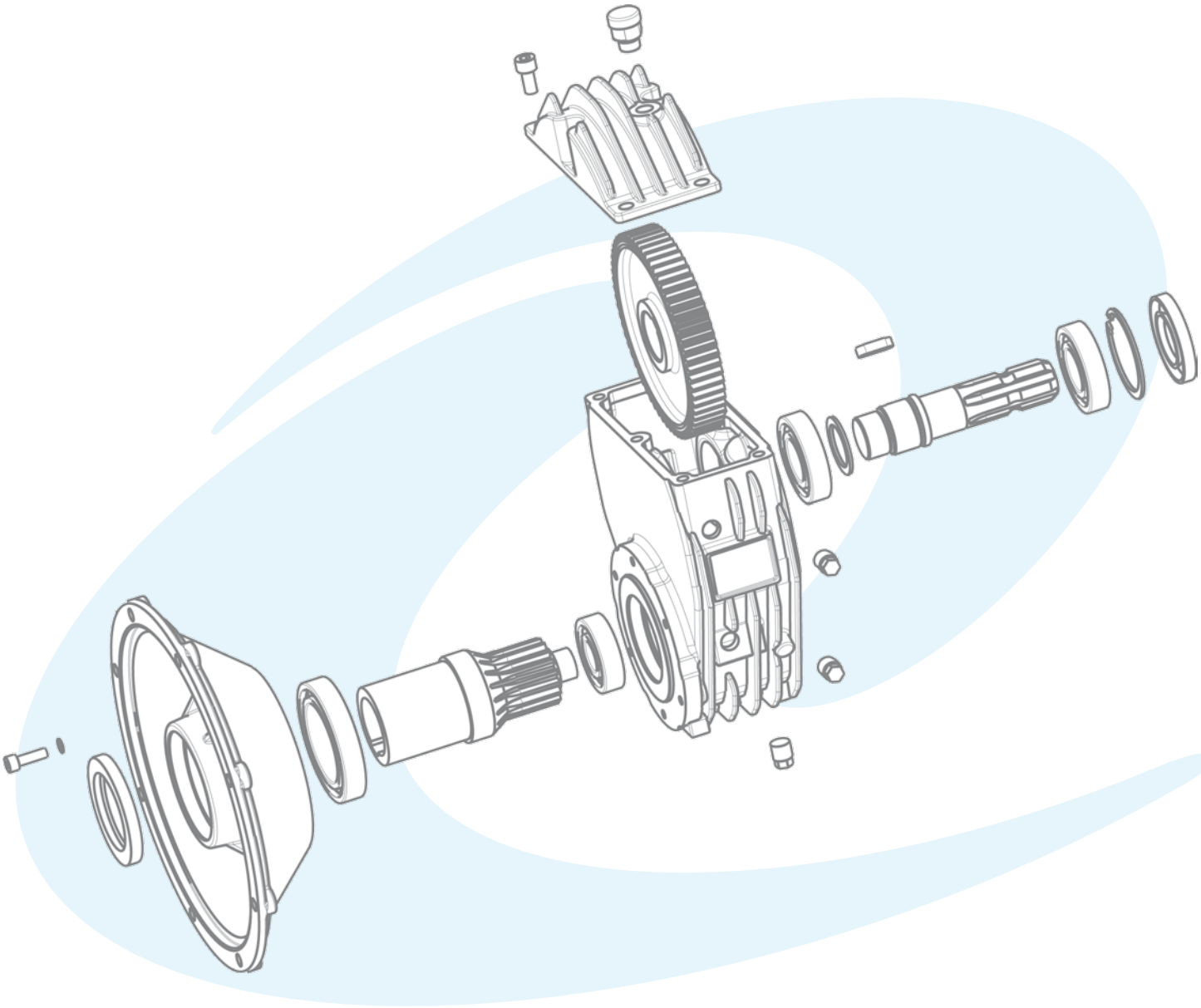

Per configurazioni non a catalogo contattare Servizio Tecnico-Commerciale
For non-catalog configurations contact Technical-Commercial Service

(0.02) Gamma paralleli multifunzione
Multifunction parallel gearboxes

RINVII PARALLELI
PARALLEL GEARBOXES

(0.02)

	i	$P_{1\text{ - max}}$ [kW]	$M_{2\text{ - max}}$ [Nm]	Tipologia alberi disponibili *Available type of shafts*	p.
A-1A	M 7.80 - - R -	11.8	26	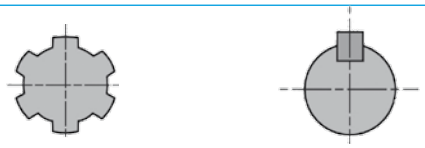	50
A-624A	M 3.50÷6.90 - - R 3.50÷6.90	31.6	876		51
A-3A	M 1.23÷6.00 - - R 1.23÷5.00	33.1	626		52
MR-90	M 1.90 - 1.00 R 1.90	64.0	1074	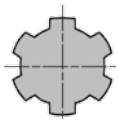	54
A-4A	M 1.48÷7.00 - 1.00 R 1.48÷7.00	66.2	1095		56
A-629A	M 1.77÷3.80 - - R -	130.0	680	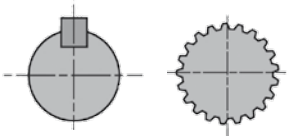	58
A-623A	M 1.60 - - R 1.60	11.0	203	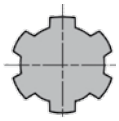	59
A-20A	M 1.88 - - R 1.88	55.2	961		60
A-16A	M - - 1.00 R -	62.6	1074		61

A-1A

Code **600**

(0.02)

[kg] 11 | [l] 0.5

Per configurazioni non a catalogo contattare Servizio Tecnico-Commerciale
For non-catalog configurations contact Technical-Commercial Service

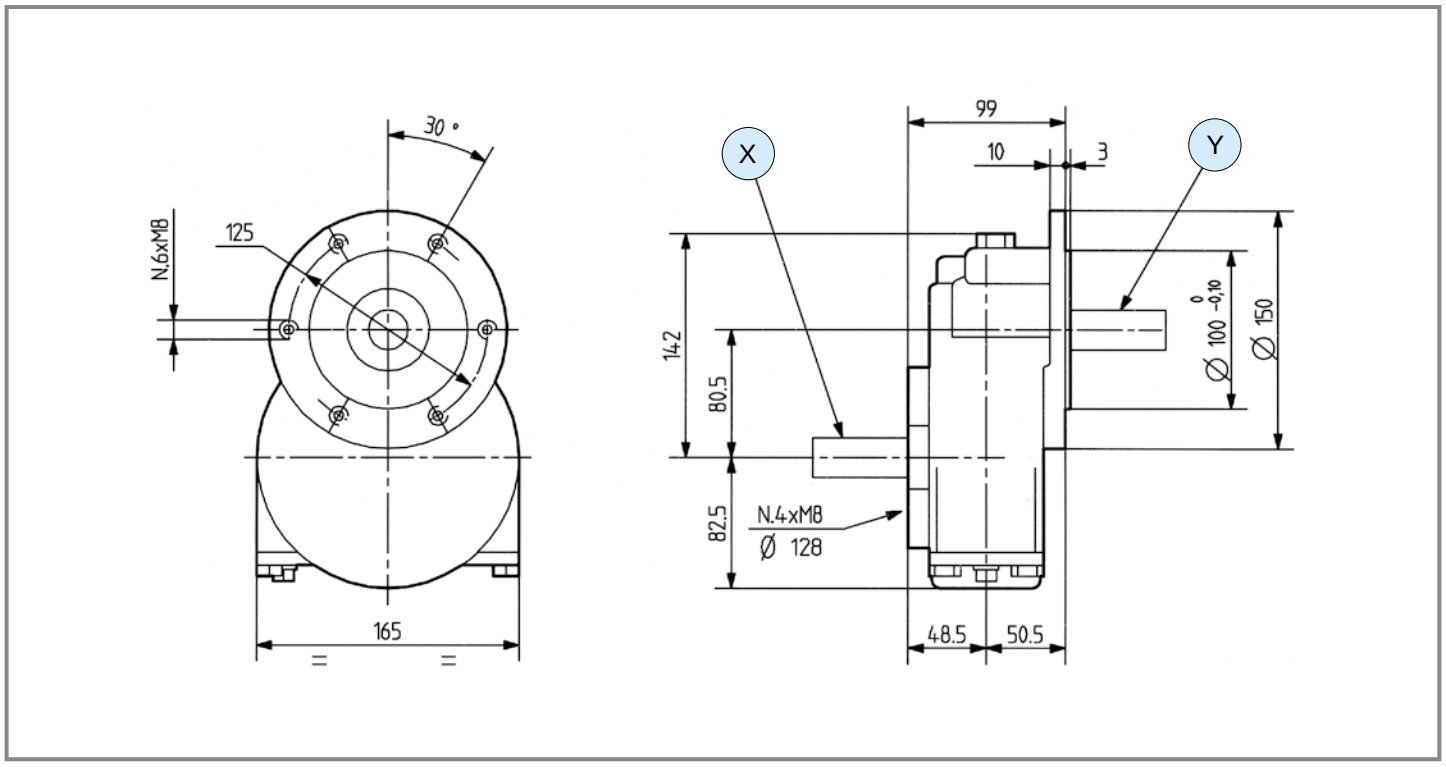

	i	N_1 [rpm]	P_1 [kW]	M_2 [Nm]	Shaft type X	Shaft type Y	Shaft type Z	Input	Option	Code	Mounting	
M ⇨ +	**7.80**	540	11.8	26	1  1" 3/8 Z6	20  L 40 ø 28	-	X	-	9.600.302	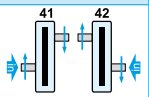 41 42	std

comer industries

A-624A

Code **624**

(0.02)



[kg] 17 | [l] 0.45

Per configurazioni non a catalogo contattare Servizio Tecnico-Commerciale
For non-catalog configurations contact Technical-Commercial Service

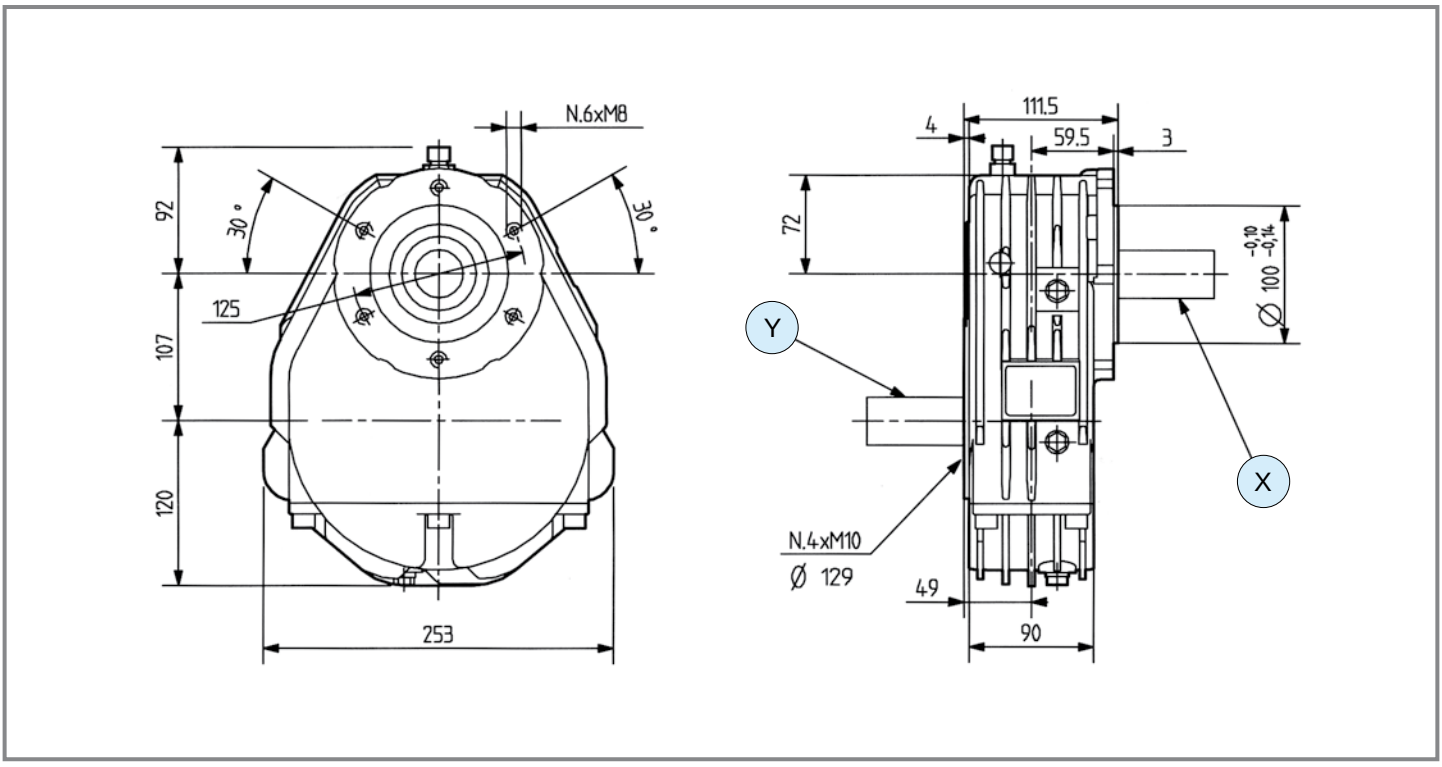

	i	N_1 [rpm]	P_1 [kW]	M_2 [Nm]	Shaft type X	Shaft type Y	Shaft type Z	Input	Option	Code	Mounting	
M	**6.90**	540	25.8	64	1 — 1" 3/8 Z6	3 — L 93.5 — ø 35	-	Y	-	9.624.000	41 42	std
M	**6.90**	540	25.8	64	1 — 1" 3/8 Z6	1 — 1" 3/8 Z6	-	Y	-	9.624.012	41 42	std
M	**3.50**	540	31.6	155	1 — 1" 3/8 Z6	3 — L 56.2 — ø 35	-	Y	-	9.624.013	41 42	std
R	**3.50**	540	13.2	792	1 — 1" 3/8 Z6	3 — L 56.2 — ø 35	-	X	-	9.624.013	51 52	std
R	**6.90**	540	7.4	876	1 — 1" 3/8 Z6	1 — 1" 3/8 Z6	-	X	-	9.624.012	51 52	std
R	**6.90**	540	7.4	876	1 — 1" 3/8 Z6	3 — L 93.8 — ø 35	-	X	-	9.624.000	51 52	std

A-3A

Code **602**

(0.02)

[kg] 18 | [l] 0.6

Per configurazioni non a catalogo contattare Servizio Tecnico-Commerciale
For non-catalog configurations contact Technical-Commercial Service

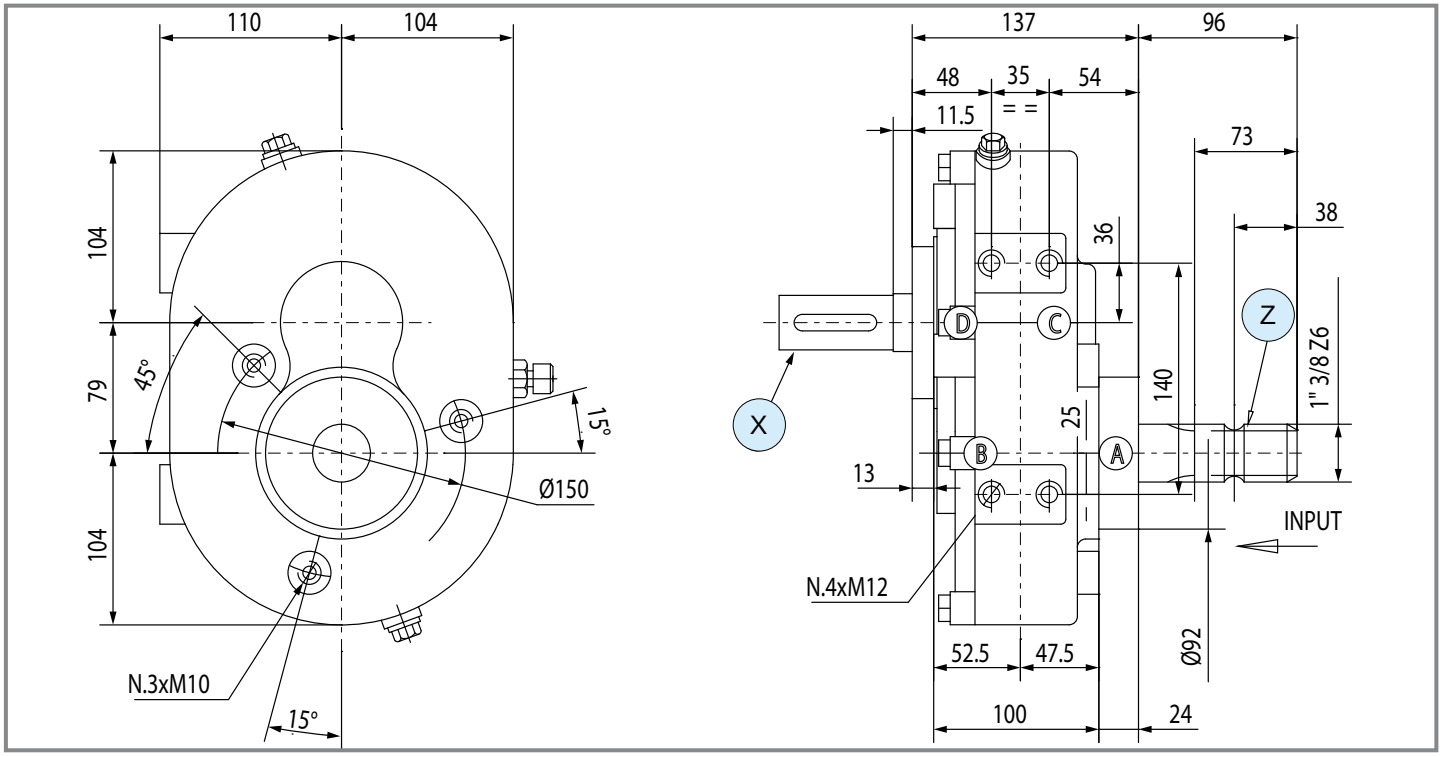

	i	N_1 [rpm]	P_1 [kW]	M_2 [Nm]	Shaft type X	Shaft type Y	Shaft type Z	Input	Option	Code	Mounting	
M	**6.00**	540	16.9	48	20 L 60 ø 28	-	1 1" 3/8 Z6	Z	-	9.602.006	41 42	**std**
	5.00	540	22.1	76	20 L 60 ø 28	-	1 1" 3/8 Z6	Z	-	9.602.005	41 42	**std**
	3.58	540	24.7	118	14 L 68 ø 33	-	1 1" 3/8 Z6	Z	-	9.602.009	41 42	std
	3.58	540	24.7	118	1 1" 3/8 Z6	-	1 1" 3/8 Z6	Z	-	9.602.015	41 42	std
	2.92	540	27.2	160	14 L 68 ø 33	-	1 1" 3/8 Z6	Z	-	9.602.000	41 42	std
	2.92	540	27.2	160	1 1" 3/8 Z6	-	1 1" 3/8 Z6	Z	-	9.602.014	41 42	std
	2.00	540	29.4	252	14 L 68 ø 33	-	1 1" 3/8 Z6	Z	-	9.602.008	41 42	std
	2.00	540	29.4	252	1 1" 3/8 Z6	-	1 1" 3/8 Z6	Z	-	9.602.013	41 42	std
	1.50	540	30.9	353	1 1" 3/8 Z6	-	1 1" 3/8 Z6	Z	-	9.602.012	41 42	std
	1.23	540	33.1	462	1 1" 3/8 Z6	-	1 1" 3/8 Z6	Z	-	9.602.010	41 42	std

A-3A

Code **602**

(0.02)

	i	N_1 [rpm]	P_1 [kW]	M_2 [Nm]	Shaft type X	Shaft type Y	Shaft type Z	Input	Option	Code	Mounting	
-	**1.00**	540	22.1	379	1 — 1" 3/8 Z6	-	1 — 1" 3/8 Z6	Z	-	9.602.003	41 42	std
	1.00	540	22.1	379	1 — 1" 3/8 Z6	-	1 — 1" 3/8 Z6	X	-	9.602.018	41 42	std
R	**1.23**	540	25.8	544	1 — 1" 3/8 Z6	-	1 — 1" 3/8 Z6	X	-	9.602.010	51 52	std
	1.50	540	18.4	473	1 — 1" 3/8 Z6	-	1 — 1" 3/8 Z6	X	-	9.602.012	51 52	std
	2.00	540	15.5	532	1 — 1" 3/8 Z6	-	1 — 1" 3/8 Z6	X	-	9.602.013	51 52	std
	2.92	540	12.5	626	1 — 1" 3/8 Z6	-	1 — 1" 3/8 Z6	X	-	9.602.014	51 52	std
	2.92	540	12.5	626	14 — L 68, ø 33	-	1 — 1" 3/8 Z6	X	-	9.602.000	51 52	std
	3.58	540	9.6	589	1 — 1" 3/8 Z6	-	1 — 1" 3/8 Z6	X	-	9.602.015	51 52	std
	5.00	540	7.4	635	20 — L 60, ø 28	-	1 — 1" 3/8 Z6	X	-	9.602.005	51 52	std

MR-90

Code **95090**

(0.02)

[kg] 27.5 | [l] 0.8

Per configurazioni non a catalogo contattare Servizio Tecnico-Commerciale
For non-catalog configurations contact Technical-Commercial Service

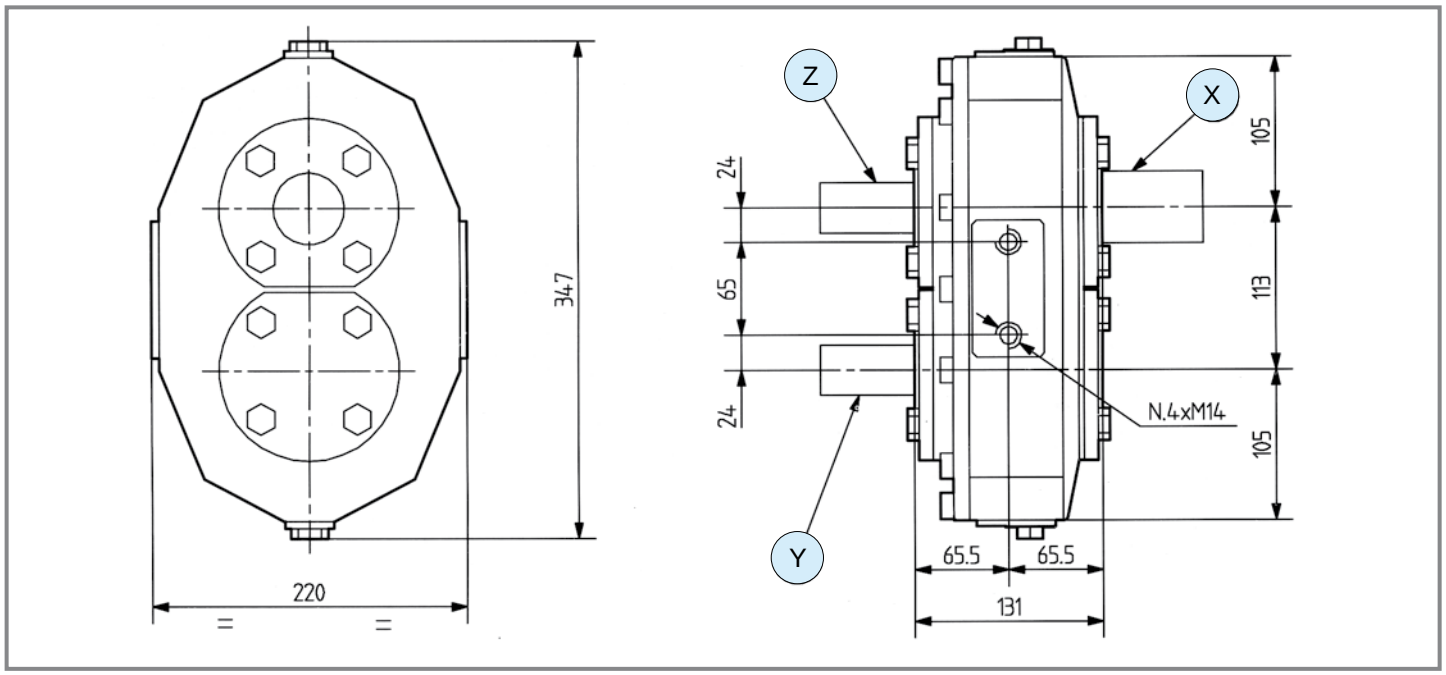

	i	N_1 [rpm]	P_1 [kW]	M_2 [Nm]	Shaft type X	Shaft type Y	Shaft type Z	Input	Option	Code	Mounting	
M	**1.90**	540	64.0	578	1 1" 3/8 Z6	1 1" 3/8 Z6	-	X	-	95090.002.019	41 42	std
-	**1.00**	540	62.6	1074	1 1" 3/8 Z6	1 1" 3/8 Z6	-	X	-	95090.002.010	41 42	std
	1.00	540	62.6	1074	1 1" 3/8 Z6	1 1" 3/8 Z6	1 1" 3/8 Z6	Z	-	95090.012.010	43 44	std
R	**1.90**	540	31.6	1030	1 1" 3/8 Z6	1 1" 3/8 Z6	-	X	-	95090.003.019	51 52	std
	1.90	540	31.6	1030	1 1" 3/8 Z6	1 1" 3/8 Z6	1 1" 3/8 Z6	X	-	95090.004.019	43 44	std

Questa pagina è lasciata intenzionalmente bianca
This page is intentionally left blank

A-4A

Code **603**

(0.02)



[kg] 41 | [l] 1.0

Per configurazioni non a catalogo contattare Servizio Tecnico-Commerciale
For non-catalog configurations contact Technical-Commercial Service

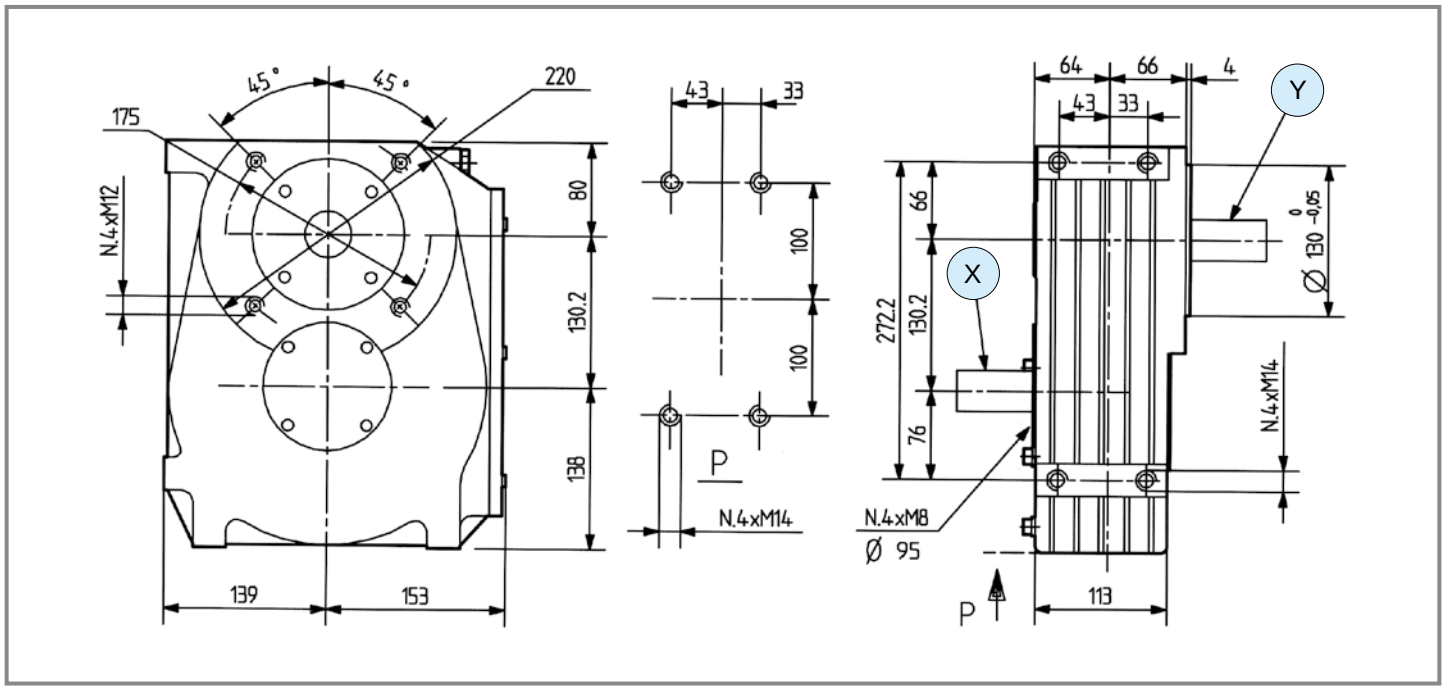

	i	N_1 [rpm]	P_1 [kW]	M_2 [Nm]	Shaft type X	Shaft type Y	Shaft type Z	Input	Option	Code	Mounting	
	7.00	540	44.2	108	1 — 1" 3/8 Z6	14 — L 76 — ø 33	-	X	-	9.603.006	41 42	std
	6.20	540	51.5	142	1 — 1" 3/8 Z6	3 — L 85 — ø 35	-	X	-	9.603.005	41 42	std
	5.00	540	55.2	189	1 — 1" 3/8 Z6	3 — L 85 — ø 35	-	X	-	9.603.000	41 42	std
	4.00	540	56.7	243	1 — 1" 3/8 Z6	3 — L 85 — ø 35	-	X	-	9.603.007.B	46 47	std
M	**3.80**	540	58.0	262	1 — 1" 3/8 Z6	3 — L 85 — ø 35	-	X	-	9.603.012	41 42	std
	3.00	540	59.6	341	1 — 1" 3/8 Z6	3 — L 85 — ø 35	-	X	-	9.603.011	41 42	std
	2.43	540	62.6	442	1 — 1" 3/8 Z6	3 — L 85 — ø 35	-	X	-	9.603.010	41 42	std
	2.00	540	64.0	549	1 — 1" 3/8 Z6	3 — L 85 — ø 35	-	X	-	9.603.009	41 42	std
	1.48	540	66.2	767	1 — 1" 3/8 Z6	3 — L 85 — ø 35	-	X	-	9.603.008	41 42	std

A-4A

Code **603**

(0.02)



	i	N_1 [rpm]	P_1 [kW]	M_2 [Nm]	Shaft type X	Shaft type Y	Shaft type Z	Input	Option	Code	Mounting	
-	**1.00**	540	62.6	1074	1 — 1" 3/8 Z6	1 — 1" 3/8 Z6	-	Y	-	9.603.203	51 52	std
	1.48	540	42.7	1084	1 — 1" 3/8 Z6	3 — L 85 — ø 35	-	Y	-	9.603.008	51 52	std
	2.00	540	31.6	1084	1 — 1" 3/8 Z6	3 — L 85 — ø 35	-	Y	-	9.603.009	51 52	std
	2.43	540	25.8	1075	1 — 1" 3/8 Z6	3 — L 85 — ø 35	-	Y	-	9.603.010	51 52	std
	3.00	540	21.0	1081	1 — 1" 3/8 Z6	3 — L 85 — ø 35	-	Y	-	9.603.011	51 52	std
R	**3.80**	540	16.6	1082	1 — 1" 3/8 Z6	3 — L 85 — ø 35	-	Y	-	9.603.012	51 52	std
	4.00	540	15.8	1084	1 — 1" 3/8 Z6	3 — L 85 — ø 35	-	Y	-	9.603.007.B	57 58	std
	5.00	540	12.5	1072	1 — 1" 3/8 Z6	3 — L 85 — ø 35	-	Y	-	9.603.000	51 52	std
	6.20	540	10.3	1095	1 — 1" 3/8 Z6	3 — L 85 — ø 35	-	Y	-	9.603.005	51 52	std
	7.00	540	8.8	1057	1 — 1" 3/8 Z6	14 — L 76 — ø 33	-	Y	-	9.603.006	51 52	std

A-629A

Code **629**

(0.02)

[kg] 72 | [l] -

Per configurazioni non a catalogo contattare Servizio Tecnico-Commerciale
For non-catalog configurations contact Technical-Commercial Service

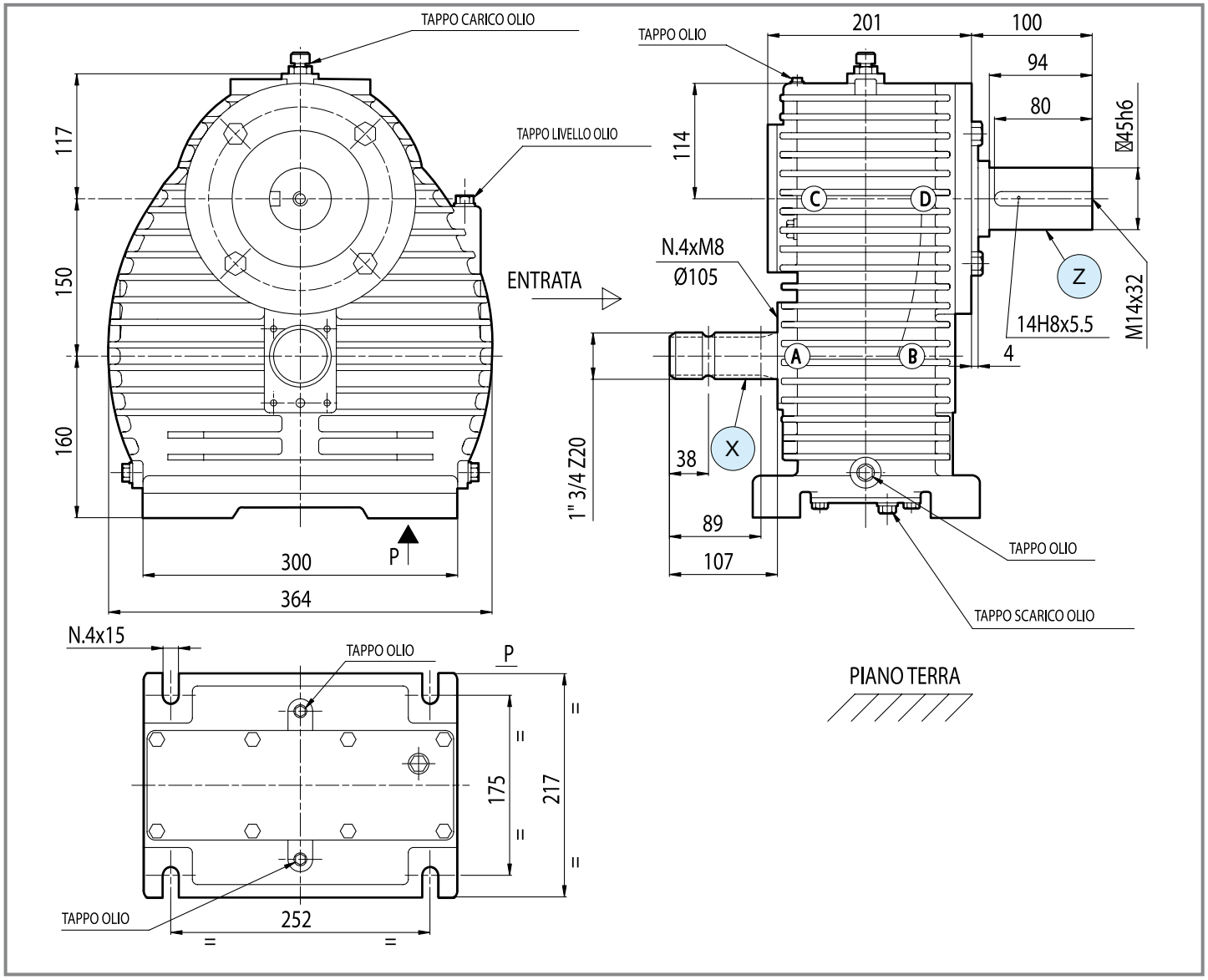

	i	N_1 [rpm]	P_1 [kW]	M_2 [Nm]	Shaft type X	Shaft type Y	Shaft type Z	Input	Option	Code	Mounting	
M	**3.80**	540	110.0	496	2 — 1" 3/8 Z21	-	21 — L 94, ø 45	X	-	9.629.302	41 42	std
	1.77	1000	130.0	680	2 — 1" 3/8 Z21	-	22 — L 60, ø 65	X	-	9.629.304	41 42	std

comer industries

A-623A

Code **623**

(0.02)

[kg] 6 | [l] -

Per configurazioni non a catalogo contattare Servizio Tecnico-Commerciale
For non-catalog configurations contact Technical-Commercial Service

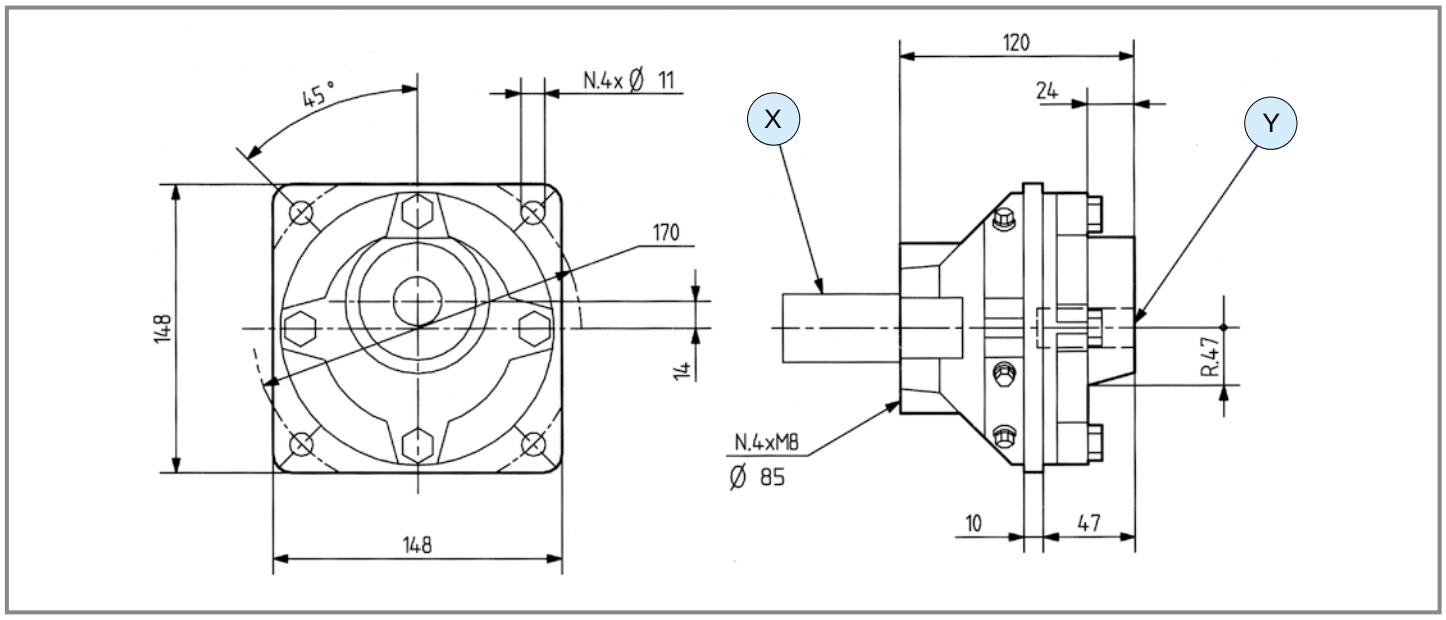

	i	N_1 [rpm]	P_1 [kW]	M_2 [Nm]	Shaft type X	Shaft type Y	Shaft type Z	Input	Option	Code	Mounting	
M	**1.60**	540	11.0	118	1 1" 3/8 Z6	1 1" 3/8 Z6	-	X	-	9.623.000	217	std
R	**1.60**	540	7.4	203	1 1" 3/8 Z6	1 1" 3/8 Z6	-	Y	--	9.623.000	215	std

A-20A

Code **620**

(0.02)

[kg] 26 | [l] 1.4

Per configurazioni non a catalogo contattare Servizio Tecnico-Commerciale
For non-catalog configurations contact Technical-Commercial Service

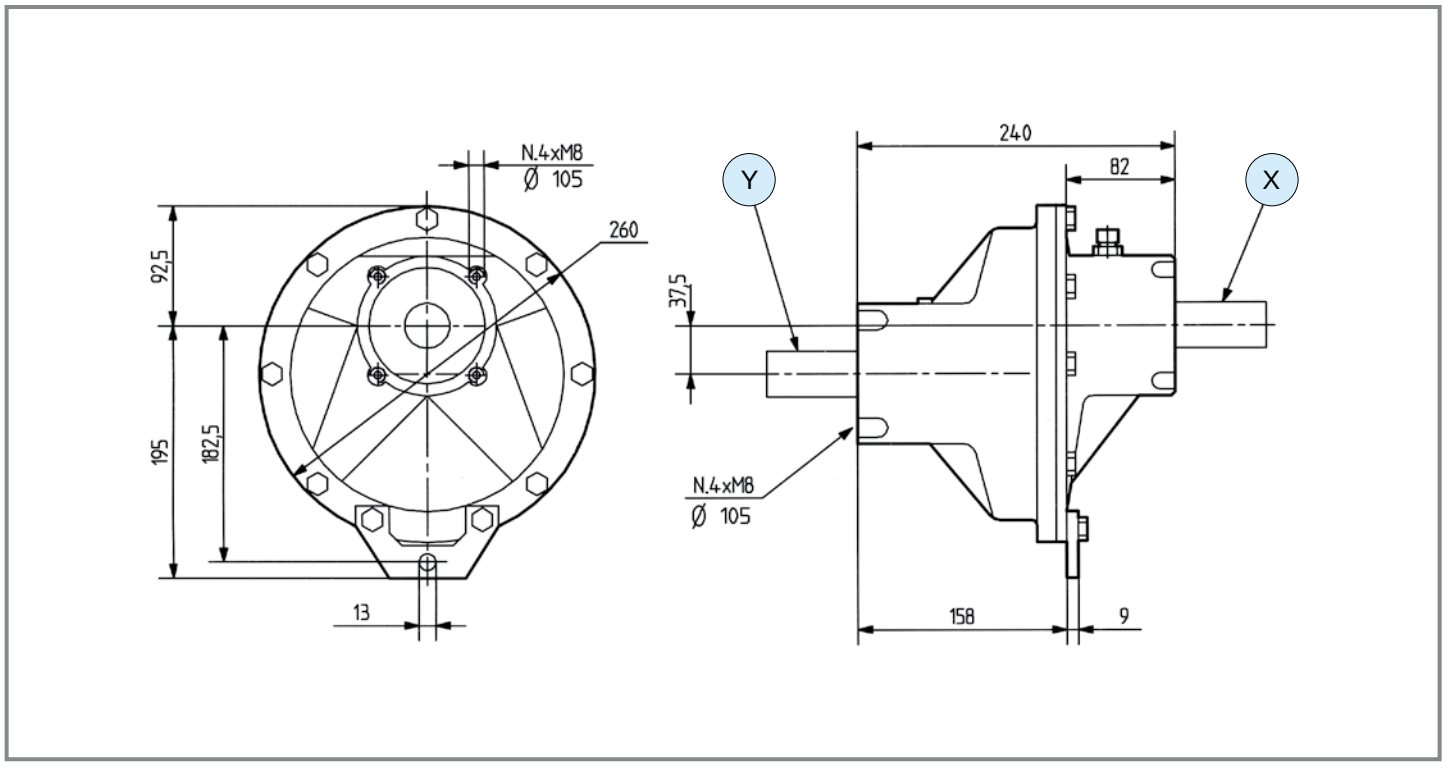

	i	N_1 [rpm]	P_1 [kW]	M_2 [Nm]	Shaft type X	Shaft type Y	Shaft type Z	Input	Option	Code	Mounting	
M	**1.88**	540	55.2	504	2 1" 3/8 Z21	1 1" 3/8 Z6	-	X	-	9.620.001	217	std
R	**1.88**	1000	55.2	961	2 1" 3/8 Z21	1 1" 3/8 Z6	-	Y	-	9.620.000	215	std
	1.88	1000	55.2	961	1 1" 3/8 Z6	1 1" 3/8 Z6	-	Y	-	9.620.002	215	std

A-16A

Code **615**

(0.02)

[kg] 40 | [l] 1.5

Per configurazioni non a catalogo contattare Servizio Tecnico-Commerciale
For non-catalog configurations contact Technical-Commercial Service

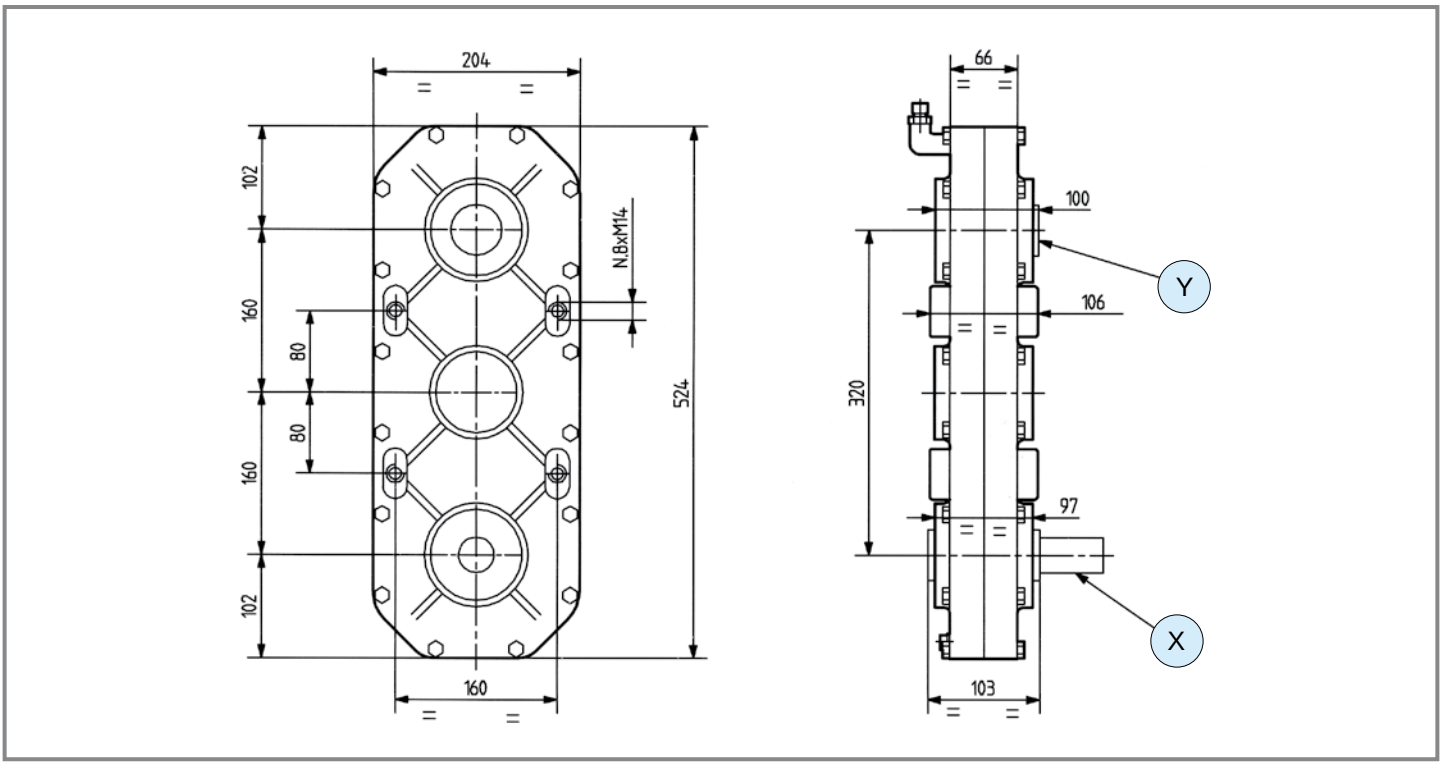

	i	N_1 [rpm]	P_1 [kW]	M_2 [Nm]	Shaft type X	Shaft type Y	Shaft type Z	Input	Option	Code	Mounting	
-	**1.00**	540	62.6	1074	1 — 1" 3/8 Z6	59 — 1" 3/8 Z6	-	X	-	9.615.000	214	std

APPLICAZIONI - *APPLICATION*

Applicazioni *Applications*		p.
Trinciastocchi *Flail Mowers*	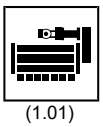 (1.01)	64
Falciadistruggierba *Rotary Mowers*	 (1.02)	84
Decespugliatori *Rotary Cutters*	 (1.03)	
Spandiletame *Manure Spreaders*	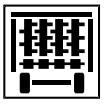 (1.04)	100
Decespugliatori idraulici *Hydraulic Cutters*	 (1.05)	106
Zappatrici - Fresatrici *Rotary Tillers*	 (2.01)	110
Zappatrici multiple *Multiple Rotary Tillers*	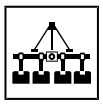 (2.02)	
Erpici rotanti *Rotary Harrows*	 (2.03)	
Trivelle *Post Hole Diggers*	 (2.04)	144
Atomizzatori *Sprayers*	 (3.01)	150
Spandiconcime *Fertilizer Spreaders*	 (3.02)	160
Pompe centrifughe per irrigazione *Centrifugal Pumps for Irrigation*	 (3.03)	166
Irrigatori a bobina *Irrigation Reels*	 (3.04)	

APPLICAZIONI - *APPLICATION*

Applicazioni *Applications*		p.
Falciatrici rotative *Cutter Bars*	 (4.01)	178
Giroandanatori *Rotary Rakes*	 (4.02)	190
Spandifieno rotativi *Rotary Tedders*	 (4.05)	
Presse raccoglitrici *Round Balers*	 (4.04)	204
Carri miscelatori *Feed Mixer Machines*	 (4.06)	208
Lancia paglia *Straw Blower*	 (4.09)	
Punte da mais *Corn Headers*	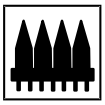 (4.08)	230
Gruppi per testate da grano e girasole *Grain Header and Sunflower Headers*	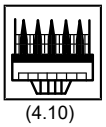 (4.10)	236
Gruppi eletrogeni *P.T.O. Generators*	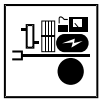 (5.01)	242
Seghe circolari - a nastro *Circular Saws - Belt Saws*	 (5.02)	
Cinematismi per mietitrebbie *Combine Harvester Solution*	 (6.01)	252
Cinematismi per trincia semoventi *Forage Harvester Driveline Solution*	 (6.02)	
Cinematismi per macchine semoventi *Self-propelled Windrower Solution*	 (6.03)	

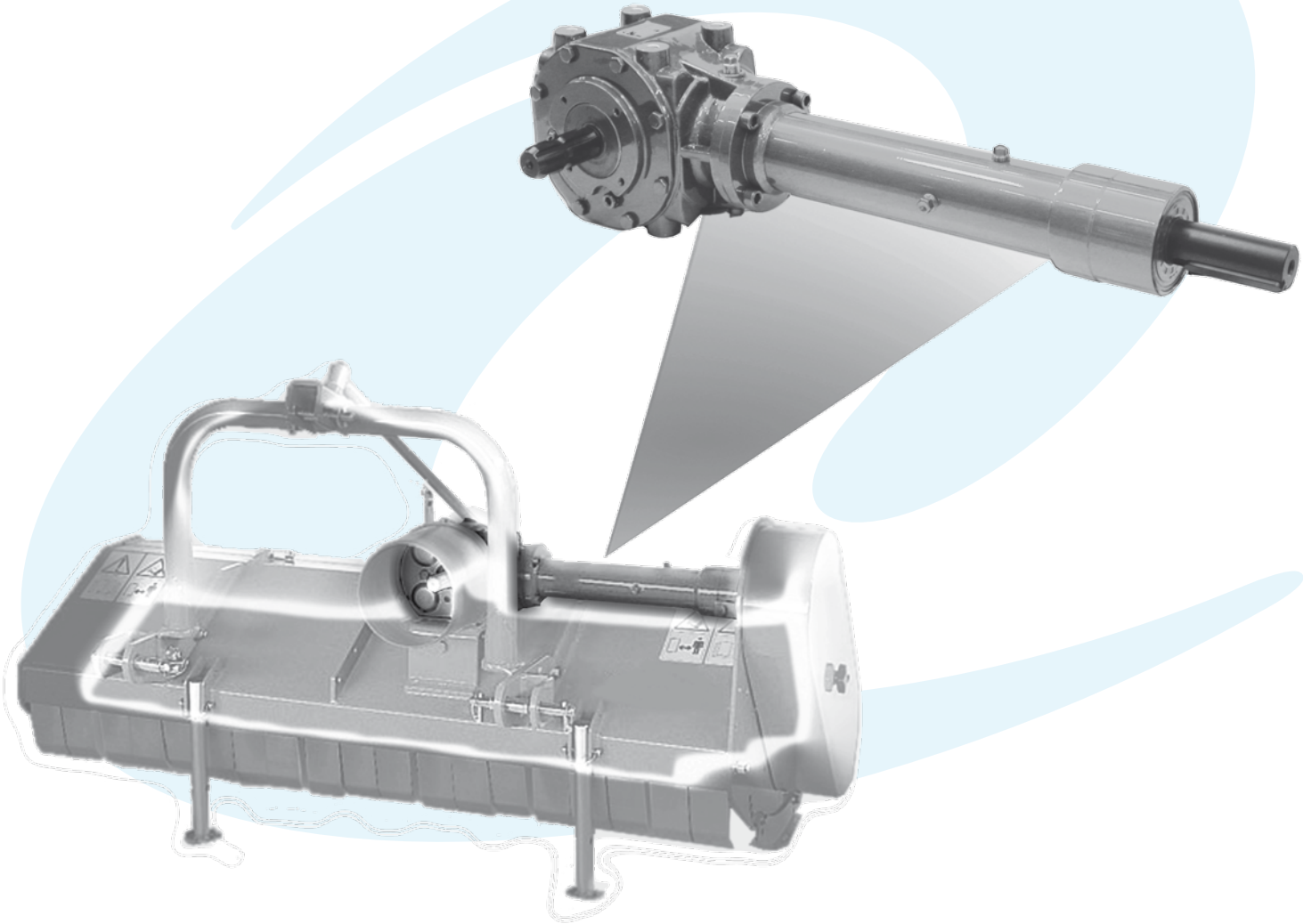

	i	$P_{1\text{ - max}}$ [kW]	$M_{2\text{ - max}}$ [Nm]	Tipologia alberi disponibili *Available type of shafts*	p.
L-5A	M 3.00 - - R -	5.1	29	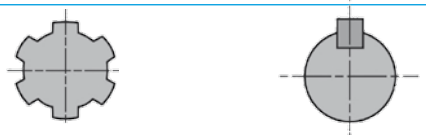	66
LL-5L	M 1.9 - - R -	11	99	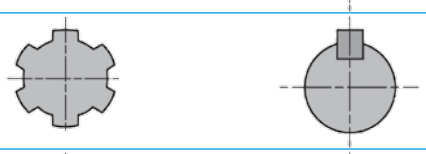	67
L-25J **L25A**	M 1.90 ÷3.00 - - R -	11	99		68
TL-281E	M 3.00 - - R -	14.7	136		69
TL-310J **TL-310A**	M 3.00 - - R -	22.1	126	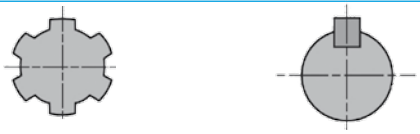	70
TL-311J **TL-311A**	M 3.00 - - R -	36.8	210	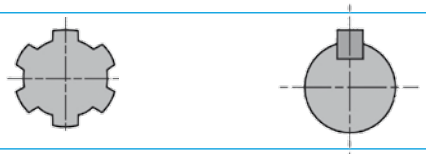	72
TL-312A	M 1.60 ÷3.00 - - R -	76.5	443		74
TL-290A	M 1.60 ÷3.00 - - R 2.07	91.1	1828	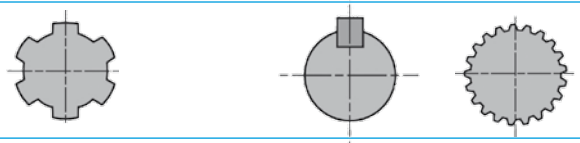	76
T-313J	M 3.00 - - R -	45.6	261	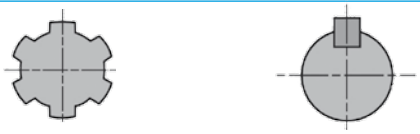	78
TL-292B	M 1.62 ÷1.86 - 1.00 R -	62.5	1059		79
T-269B	M 1.63 ÷1.93 - 1.00 R	77.3	1261		80
T-301B	M 1.35 ÷1.93 - 1.00 R	184	1790		81
T-331A	M 1.35 ÷1.92 - 1.00 R	264.7	2451		82

L-5A

Code **104**

(1.01)



[kg] 8 | [l] 0.4

Per configurazioni non a catalogo contattare Servizio Tecnico-Commerciale
For non-catalog configurations contact Technical-Commercial Service

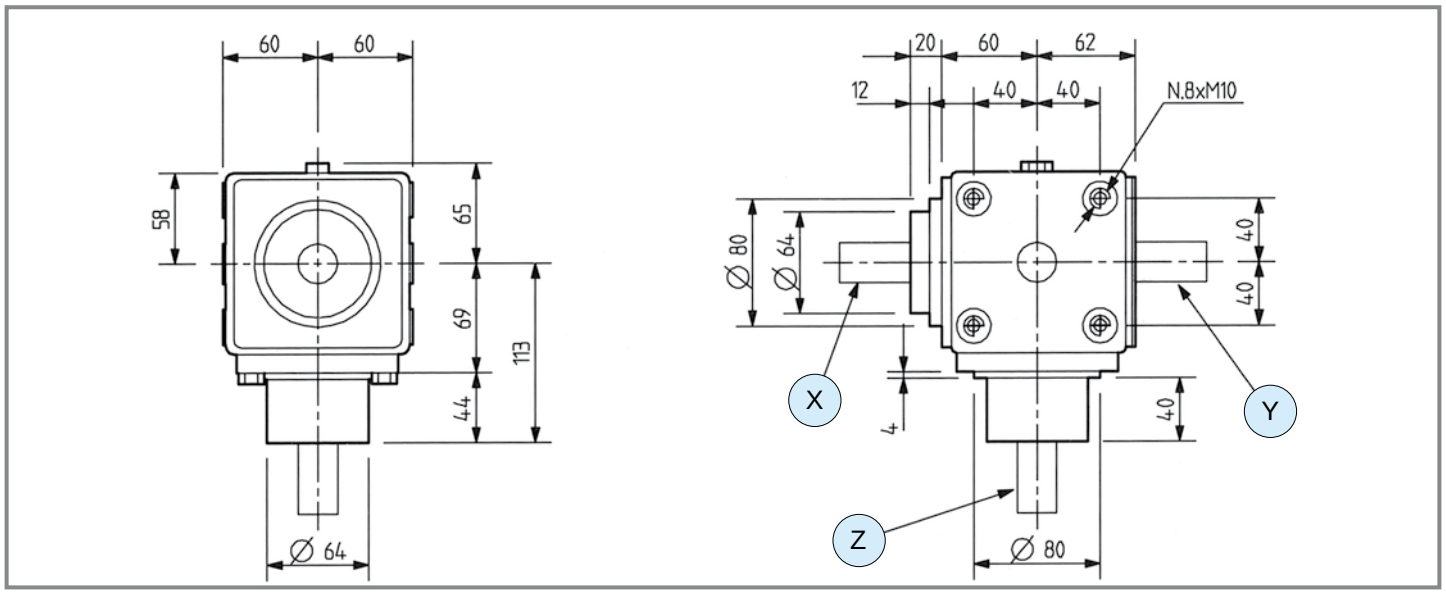

	1 - Ruota libera / *Free wheel*												
	i	**N_1 [rpm]**	**P_1 [kW]**	**M_2 [Nm]**	**Shaft type X**	**Y**	**Z**	**Input**	**Option**	**Lenght**	**Code**	**Mounting**	
M	**3.00**	540	5.1	29	16 L 50 ø 22	-	16 L 49 ø 22	X	1	-	9.104.628	21 22	special
	3.00	540	5.1	29	16 L 50 ø 22	-	16 L 49 ø 22	X	1	-	9.104.630	23 24	special
	3.00	540	5.1	29	12 L 52 ø 25	-	12 L 57 ø 25	X	1	-	9.104.648	23 24	std
	2.78	540	5.1	29	12 L 60 ø 25	12 L 58 ø 25	1 1" 3/8 Z6	X	-	-	9.104.037	21 22	std

comer industries

LL-5L

Code **104**

(1.01)

[kg] 15 | [l] 0.7

Per configurazioni non a catalogo contattare Servizio Tecnico-Commerciale
For non-catalog configurations contact Technical-Commercial Service

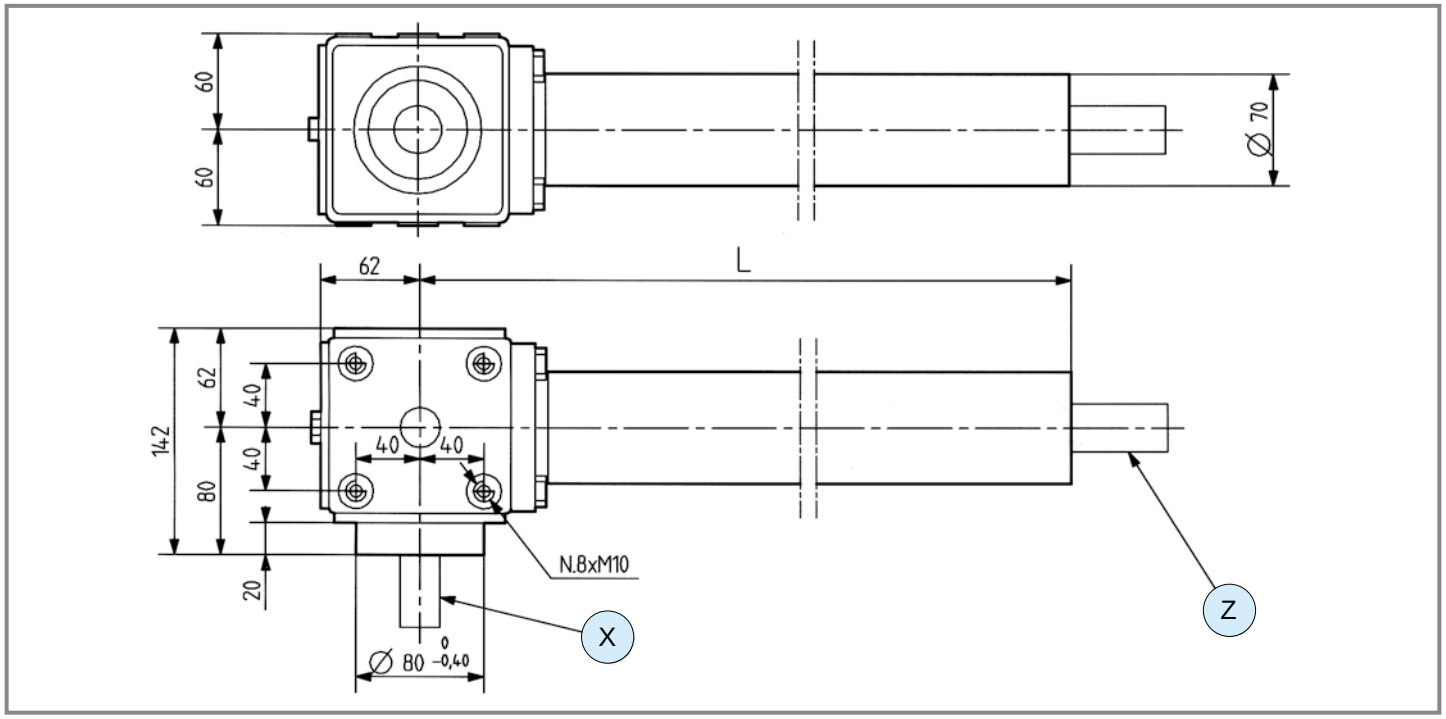

	i	N_1 [rpm]	P_1 [kW]	M_2 [Nm]	Shaft type X	Shaft type Y	Shaft type Z	Input	Option	Lenght	Code	Mounting	
M	**1.90**	540	11	99	1  1" 3/8 Z6	-	12  L 60 ø 25	X	-	530	9.104.419	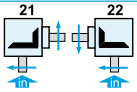 21 22	std

L-25J

Code **124.8**

L-25A

Code **124**

(1.01)



[kg] 4.1 | [l] 0.4

Per configurazioni non a catalogo contattare Servizio Tecnico-Commerciale
For non-catalog configurations contact Technical-Commercial Service

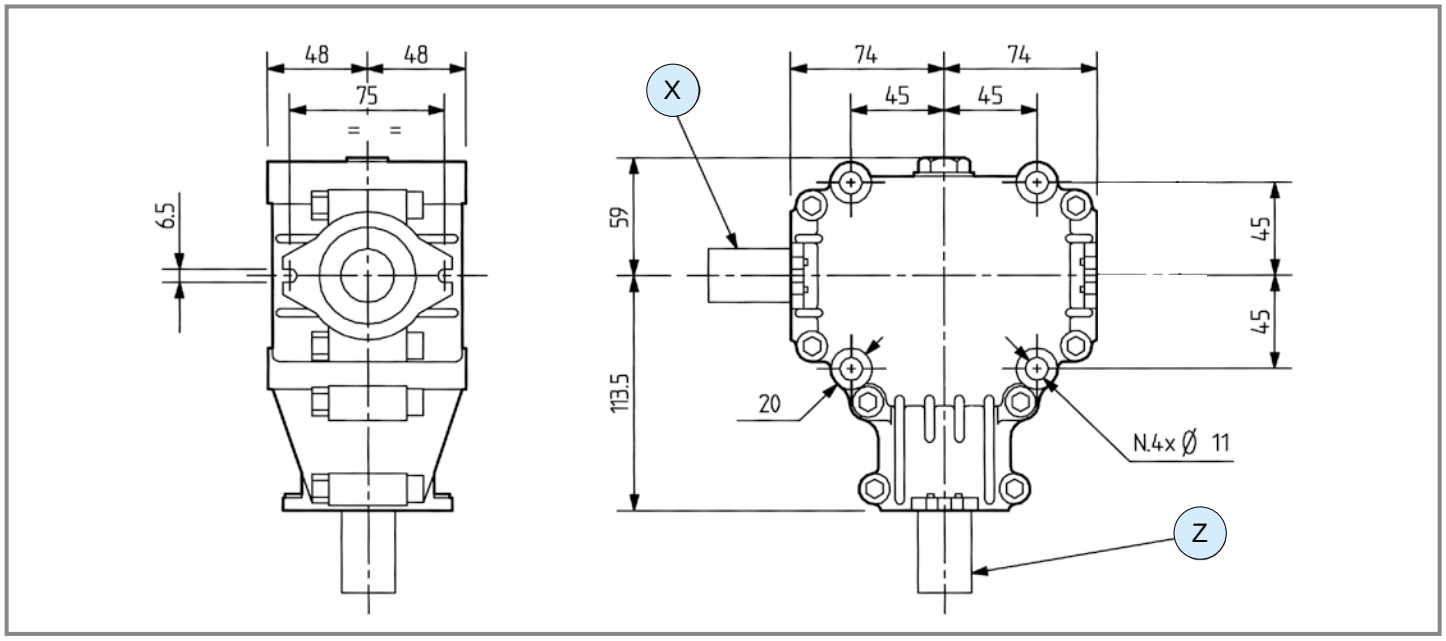

	1 - Ruota libera / *Free wheel*													
	i	N_1 [rpm]	P_1 [kW]	M_2 [Nm]	Shaft type X	Y	Z	Input	Option	Lenght	Code	Mounting	
M	**3.00**	540	5.0	29	16 L 52 ø 22	-	16 L 56 ø 22	X	1	-	9.124.654	21 22	std
	3.00	540	5.0	29	16 L 52 ø 22	-	16 L 56 ø 22	X	1	-	9.124.686	23 24	std
	3.00	540	5.0	29	1 1" 3/8 Z6	-	16 L 49 ø 22	X	1	-	9.124.878	21 22	std
	3.00	540	5.0	29	1 1" 3/8 Z6	-	16 L 49 ø 22	X	1	-	9.124.879	23 24	std
	3.00	540	5.0	29	16 L 52 ø 22	-	12 L 56.5 ø 25	X	1	-	9.124.883	23 24	std
	3.00	540	5.0	63	1 1" 3/8 Z6	-	12 L 69.5 ø 25	X	1	-	9.124.895	21 22	std
	1.90	540	11.0	99	1 1" 3/8 Z6	-	12 L 72 ø 25	X	1	-	9.124.462	23 24	std

comer industries

TL-281E

Code **281**

(1.01)

[kg] - [l] -

Per configurazioni non a catalogo contattare Servizio Tecnico-Commerciale
For non-catalog configurations contact Technical-Commercial Service

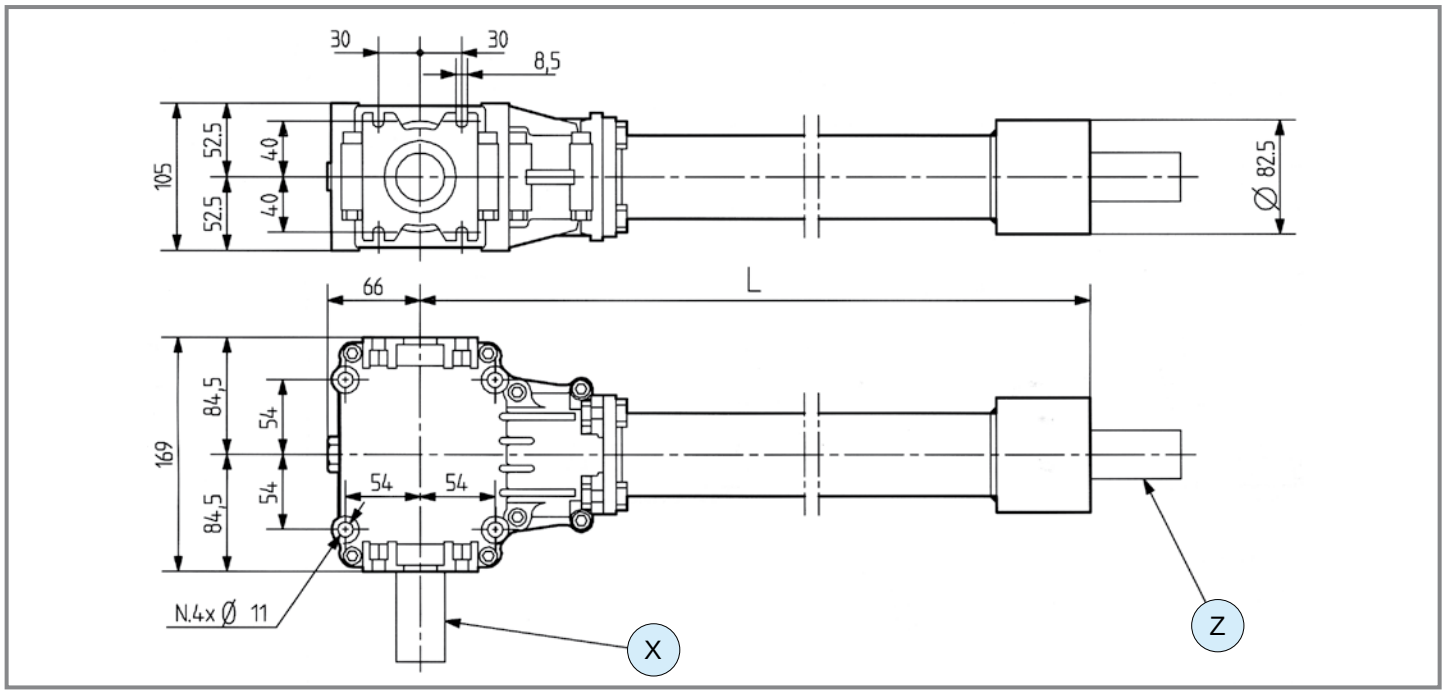

	1 - Ruota libera / *Free wheel*												
	i	N_1 [rpm]	P_1 [kW]	M_2 [Nm]	Shaft type X	Shaft type Y	Shaft type Z	Input	Option	Lenght	Code	Mounting	
M	**2.91**	540	9.6	57	1 — 1" 3/8 Z6	-	12 — L 59, ø 25	X	1	-	9.281.321	21 22	std
	2.91	540	9.6	57	1 — 1" 3/8 Z6	-	12 — L 59, ø 25	X	-	530	9.281.045	23 24	std
	2.91	540	9.6	57	1 — 1" 3/8 Z6	-	12 — L 59, ø 25	X	-	715	9.281.047	21 22	std
	2.91	540	9.6	57	1 — 1" 3/8 Z6	-	12 — L 59, ø 25	X	1	530	9.281.327	21 22	std
	2.91	540	9.6	57	1 — 1" 3/8 Z6	-	12 — L 59, ø 25	X	1	715	9.281.326	21 22	std
	1.85	540	14.7	136	1 — 1" 3/8 Z6	-	12 — L 59, ø 25	X	-	530	9.281.042	21 22	std

TL-310J

Code 310.8

TL-310A

Code310

(1.01)



[kg] 18 | [l] 0.8

Per configurazioni non a catalogo contattare Servizio Tecnico-Commerciale
For non-catalog configurations contact Technical-Commercial Service

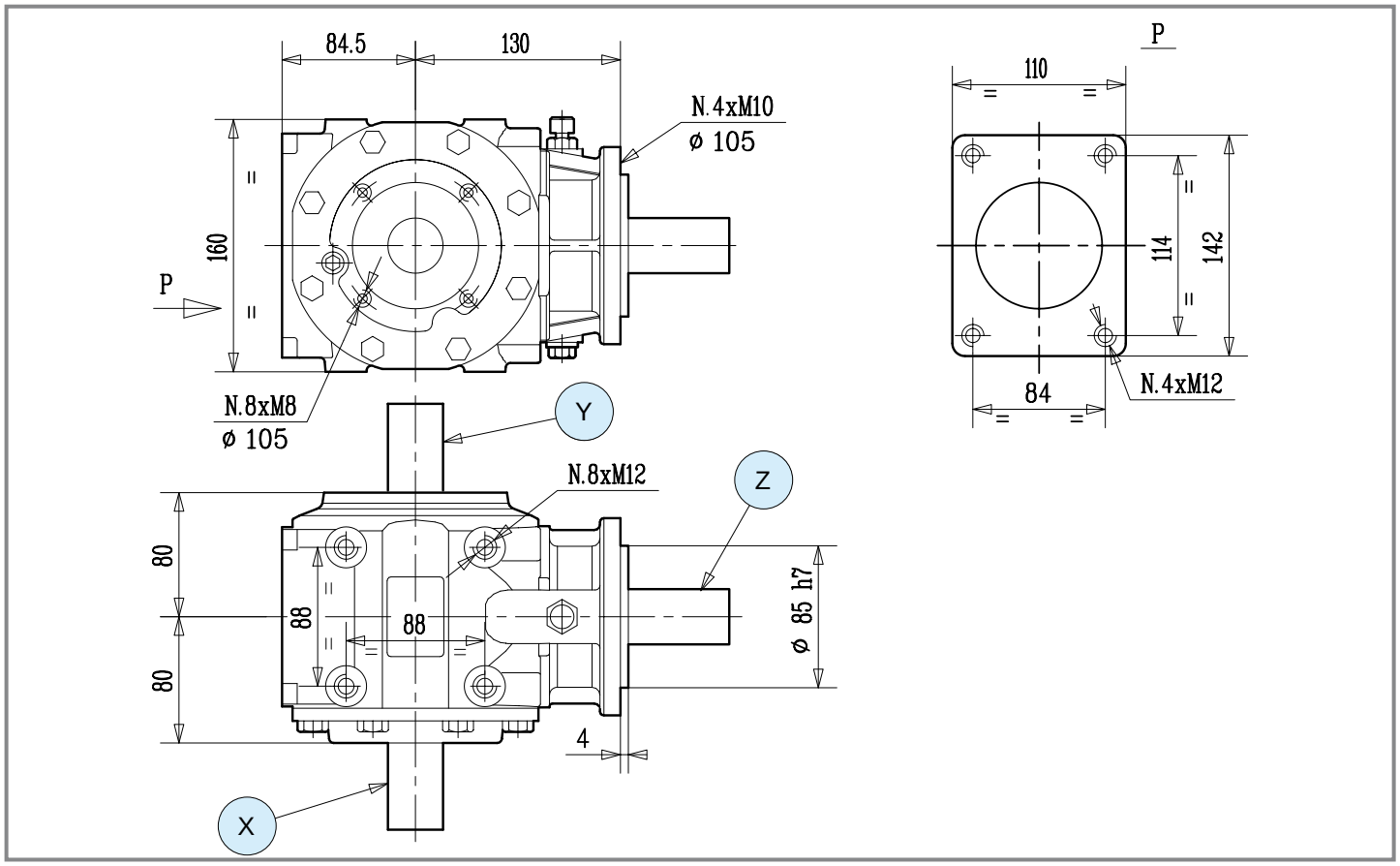

	i	N_1 [rpm]	P_1 [kW]	M_2 [Nm]	1 - Ruota libera / *Free wheel* Shaft type X	Shaft type Y	Shaft type Z	Input	Option	Lenght [mm]	Code	Mounting	
M	**3.00**	540	22.1	126	1 — 1" 3/8 Z6	-	3 — L 85 — ø 35	X	1	615	9.310.050	21 22	std
	3.00	540	22.1	126	1 — 1" 3/8 Z6	-	3 — L 85 — ø 35	X	1	530	9.310.063	21 22	std
	3.00	540	22.1	126	1 — 1" 3/8 Z6	1 — 1" 3/8 Z6	14 — L 58 — ø 33	X	1	-	9.310.870	25 26	std
	3.00	540	22.1	126	1 — 1" 3/8 Z6	-	14 — L 58 — ø 33	X	1	-	9.310.875	31 32	std
	3.00	540	22.1	126	1 — 1" 3/8 Z6	-	14 — L 58 — ø 33	X	1	-	9.310.876	23 24	std

comer industries



Prolunghe / Extensions TL-310D

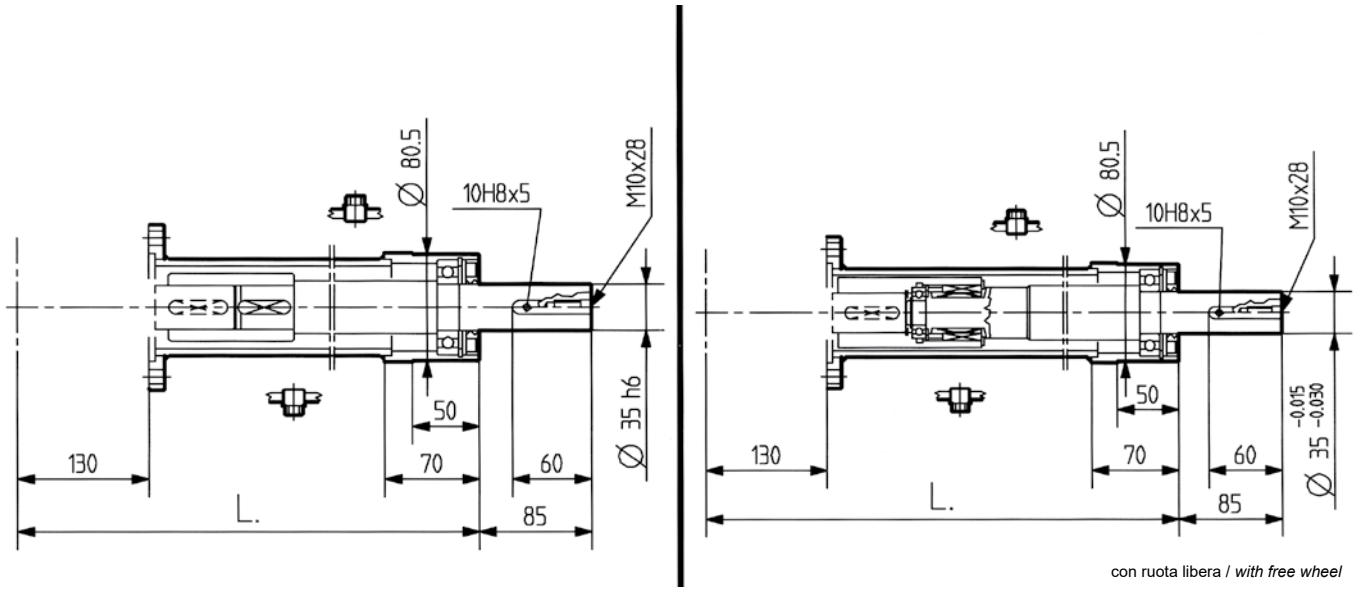

con ruota libera / *with free wheel*

Lunghezze prolunghe Extensions lenghts [mm]	Code
430	9.310.500
530	9.310.502
615	9.310.501
715	9.310.503

TL-311J

Code 311.8

TL-311A

Code311

(1.01)



[kg] 23.5 | [l] 1.2

Per configurazioni non a catalogo contattare Servizio Tecnico-Commerciale
For non-catalog configurations contact Technical-Commercial Service

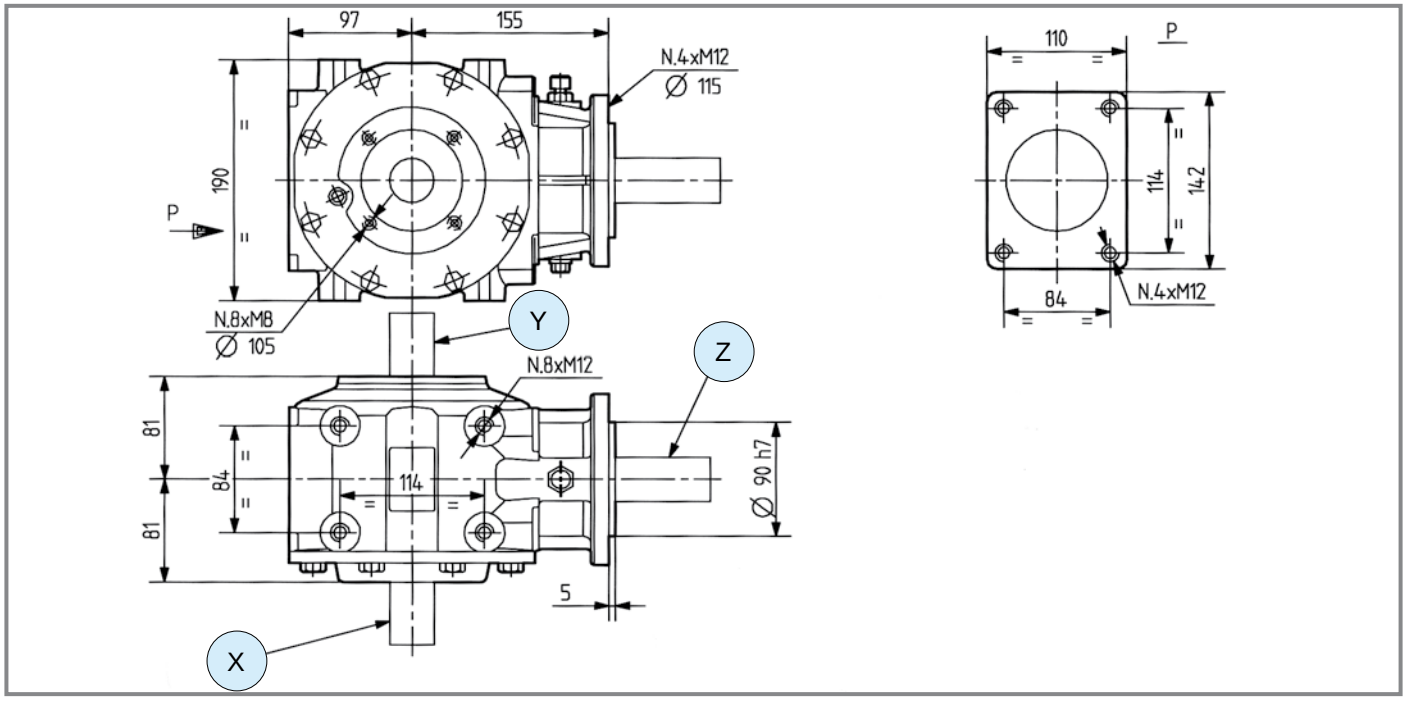

1 - Ruota libera / *Free wheel* 5 - Doppia ruota libera / Double *free wheel*

	i	N_1 [rpm]	P_1 [kW]	M_2 [Nm]	Shaft type X	Shaft type Y	Shaft type Z	Input	Option	Lenght [mm]	Code	Mounting	
	3.00	540	36.8	210	1 – 1" 3/8 Z6	-	4 – L 106 – ø 40	X	1	950	9.311.083	21 – 22	std
	3.00	540	36.8	210	1 – 1" 3/8 Z6	-	4 – L 106 – ø 40	X	1	780	9.311.075	21 – 22	std
	3.00	540	36.8	210	1 – 1" 3/8 Z6	-	4 – L 106 – ø 40	X	1	615	9.311.093	21 – 22	std
	3.00	540	36.8	210	1 – 1" 3/8 Z6	1 – 1" 3/8 Z6	14 – L 77 – ø 33	X	5	-	9.311.645	36	std
	3.00	540	36.8	210	1 – 1" 3/8 Z6	-	14 – L 77 – ø 33	X	1	-	9.311.614	21 – 22	std
M	**3.00**	540	36.8	210	1 – 1" 3/8 Z6	1 – 1" 3/8 Z6	14 – L 77 – ø 33	X	1	-	9.311.615	21 – 22	std
	3.00	540	36.8	210	1 – 1" 3/8 Z6	-	14 – L 77 – ø 33	X	1	-	9.311.622	23 – 24	std
	3.00	540	36.8	210	1 – 1" 3/8 Z6	-	1 – 1" 3/8 Z6	X	1	-	9.311.670	21 – 22	std
	3.00	540	36.8	210	1 – 1" 3/8 Z6	-	14 – L 77 – ø 33	X	1	-	9.311.874	21 – 22	std
	3.00	540	36.8	210	1 – 1" 3/8 Z6	1 – 1" 3/8 Z6	14 – L 77 – ø 33	X	1	-	9.311.875	27 – 28	std
	3.00	540	36.8	210	1 – 1" 3/8 Z6	-	14 – L 77 – ø 33	X	1	-	9.311.885	23 – 24	std

comer industries



Prolunghe / Extensions TL-311D

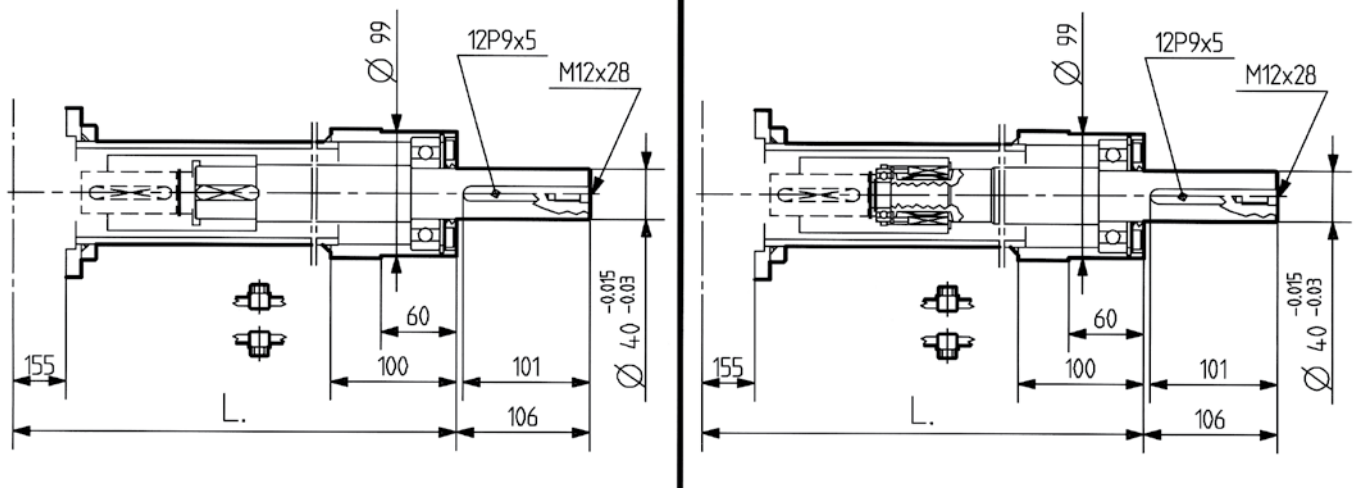

con ruota libera / *with free wheel*

Lunghezze prolunghe Extensions lenghts [mm]	Code
500	9.312.505
615	9.312.500
780	9.312.503
950	9.312.515
1060	9.312.502
1200	9.312.508
1350	9.312.507

TL-312A

Code **312**

(1.01)



[kg] 27 | [l] 1.5

Per configurazioni non a catalogo contattare Servizio Tecnico-Commerciale
For non-catalog configurations contact Technical-Commercial Service

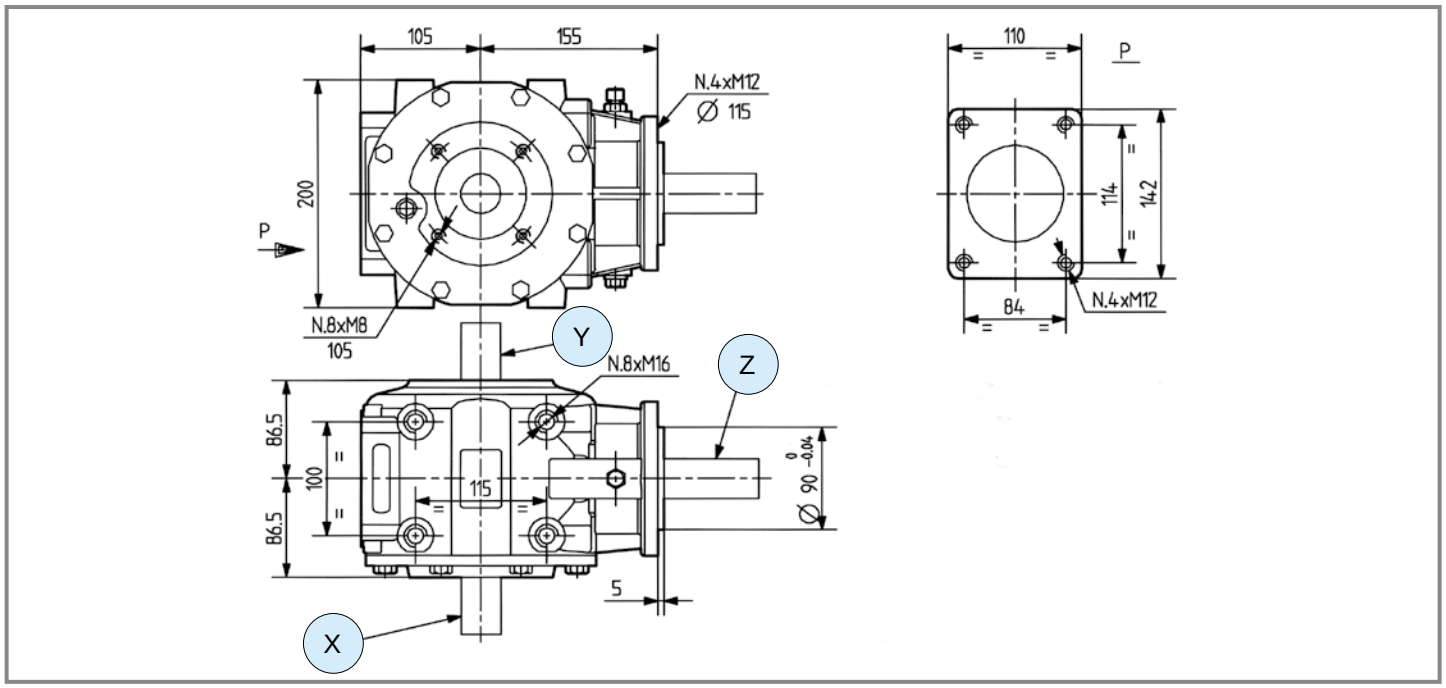

1 - Ruota libera / *Free wheel* 5 - Doppia ruota libera / Double *free wheel*

	i	N_1 [rpm]	P_1 [kW]	M_2 [Nm]	Shaft type X	Shaft type Y	Shaft type Z	Input	Option	Lenght [mm]	Code	Mounting	
M	**3.00**	540	45.6	261	1 — 1" 3/8 Z6	-	4 — L 106 — ø 40	X	1	1200	9.312.386	21 22	std
	3.00	540	45.6	261	1 — 1" 3/8 Z6	1 — 1" 3/8 Z6	4 — L 106 — ø 40	X	1	1200	9.312.328	27 28	std
	3.00	540	45.6	261	1 — 1" 3/8 Z6	1 — 1" 3/8 Z6	4 — L 106 — ø 40	X	1	950	9.312.327	27 28	std
	3.00	540	45.6	261	1 — 1" 3/8 Z6	-	4 — L 106 — ø 40	X	1	780	9.312.094	21 22	std
	3.00	540	45.6	261	1 — 1" 3/8 Z6	-	14 — L 77 — ø 33	X	1	-	9.312.756	21 22	std
	3.00	540	45.6	261	1 — 1" 3/8 Z6	-	4 — L 85.5 — ø 40	X	1	-	9.312.762	21 22	std
	3.00	540	45.6	261	1 — 1" 3/8 Z6	-	14 — L 77 — ø 33	X	1	-	9.312.661	23 24	std
	3.00	540	45.6	261	1 — 1" 3/8 Z6	1 — 1" 3/8 Z6	14 — L 77 — ø 33	X	5	-	9.312.795	36	std
	1.60	1000	76.5	443	1 — 1" 3/8 Z6	1 — 1" 3/8 Z6	14 — L 77 — ø 33	X	5	-	9.312.797	36	std
	1.60	1000	76.5	443	1 — 1" 3/8 Z6	1 — 1" 3/8 Z6	14 — L 77 — ø 33	X	1	-	9.312.755	27 28	std

comer industries



Prolunghe / Extensions TL-312D

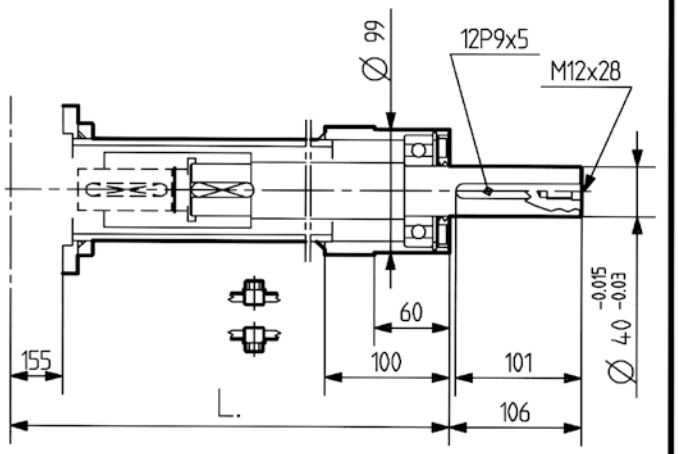

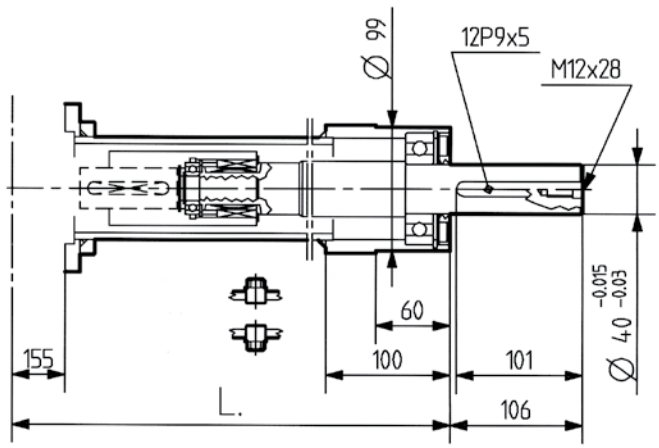

con ruota libera / *with free wheel*

Lunghezze prolunghe Extensions lenghts [mm]	Code
500	9.312.505
615	9.312.500
780	9.312.503
950	9.312.515
1060	9.312.502
1200	9.312.508
1350	9.312.507

TL-290A

Code **290**

(1.01)



[kg] 23.5 | [l] 1.7

Per configurazioni non a catalogo contattare Servizio Tecnico-Commerciale
For non-catalog configurations contact Technical-Commercial Service

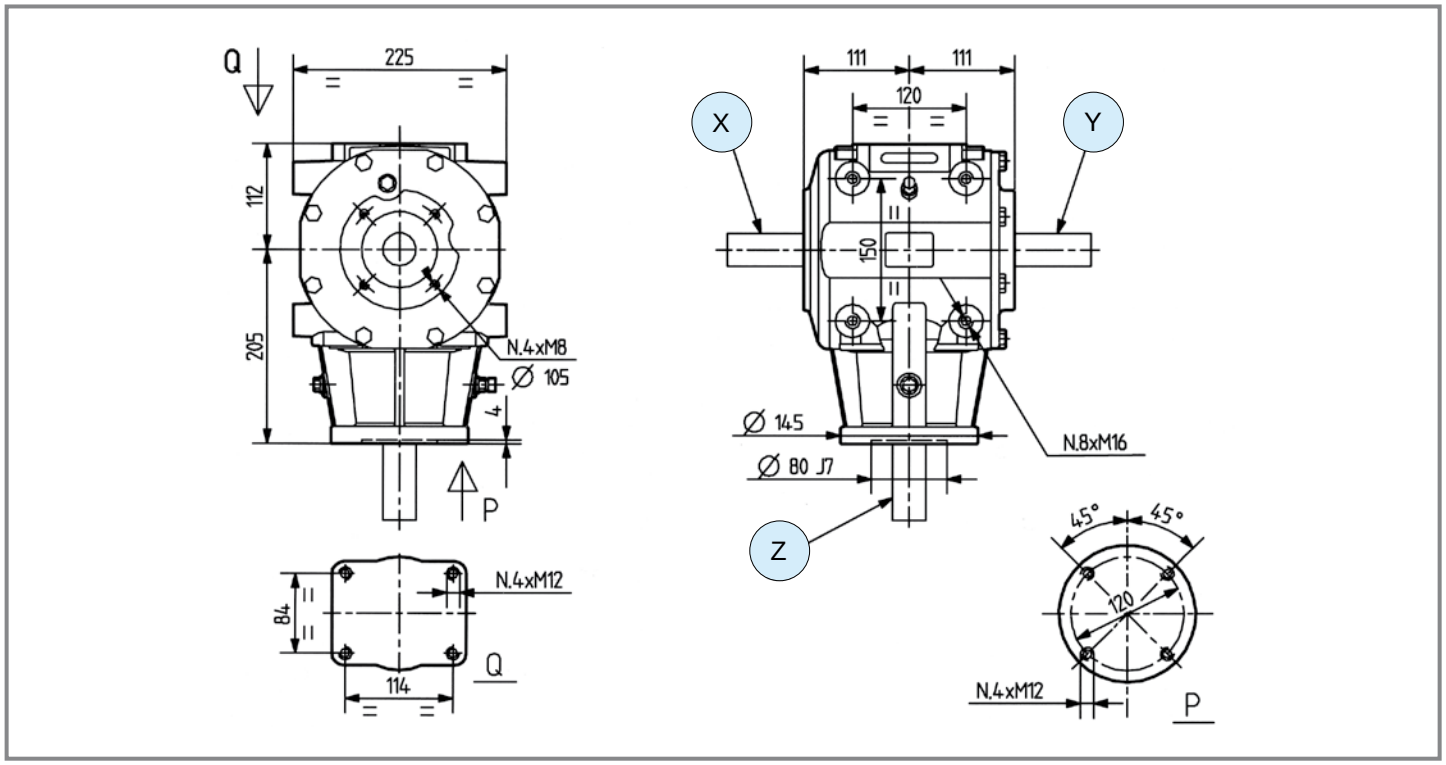

1 - Ruota libera / *Free wheel* 5 - Doppia ruota libera / Double *free wheel*

	i	N_1 [rpm]	P_1 [kW]	M_2 [Nm]	Shaft type X	Shaft type Y	Shaft type Z	Input	Option	Lenght [mm]	Code	Mounting	
M	**3.00**	540	57.3	328	1 — 1" 3/8 Z6	1 — 1" 3/8 Z6	4 — L 82 — ø 40	X	5	-	9.290.764	36	std
	3.00	540	57.3	326	1 — 1" 3/8 Z6	-	1 — 1" 3/8 Z6	X	1	-	9.290.600	21 22	std
	3.00	540	57.3	328	7 — 36x40 DIN5482	7 — 36x40 DIN5482	1 — 1" 3/8 Z6	X	1	-	9.290.606	21 22	std
	3.00	1000	78.7	243	1 — 1" 3/8 Z6	-	4 — L 82 — ø 40	X	1	-	9.290.609	23 24	std
	3.00	1000	79.0	244	1 — 1" 3/8 Z6	-	4 — L 120 — ø 40	X	1	-	9.290.610	21 22	std
	3.00	540	57.3	328	1 — 1" 3/8 Z6	-	1 — 1" 3/8 Z6	X	1	-	9.290.628	21 22	std
	3.00	540	62.3	356	1 — 1" 3/8 Z6	-	4 — L 82 — ø 40		1	-	9.290.639	23 24	std
	3.00	540	57.3	328	1 — 1" 3/8 Z6	-	4 — L 82 — ø 40	X	1	-	9.290.762	21 22	std
	3.00	540	57.3	328	1 — 1" 3/8 Z6	-	4 — L 82 — ø 40	X	1	-	9.290.756	21 22	std
	2.42	540	58.8	417	1 — 1" 3/8 Z6	1 — 1" 3/8 Z6	4 — L 82 — ø 40	X	1	-	9.290.755	27 28	std

comer industries

TL-290A

Code **290**

(1.01)



1 - Ruota libera / *Free wheel* 5 - Doppia ruota libera / Double *free wheel*

	i	N_1 [rpm]	P_1 [kW]	M_2 [Nm]	Shaft type X	Shaft type Y	Shaft type Z	Input	Option	Lenght [mm]	Code	Mounting	
	1.86	540	62.5	576	1 — 1" 3/8 Z6	-	4 — L 82 — ø 40	X	1	-	9.290.759	21 22	std
	1.60	1000	91.1	527	1 — 1" 3/8 Z6	-	4 — L 82 — ø 40	X	1	-	9.290.763	21 22	std
M	**1.60**	1000	91.1	527	1 — 1" 3/8 Z6	1 — 1" 3/8 Z6	4 — L 82 — ø 40	X	1	-	9.290.737	27 28	std
	1.60	1000	91.1	527	1 — 1" 3/8 Z6	1 — 1" 3/8 Z6	4 — L 82 — ø 40	X	5	-	9.290.765	-	std
	1.60	1000	88.2	504	1 — 1" 3/8 Z6	-	21 — L 118 — ø 45	X	1	1560	9.290.084	21 22	std
R	**2.07**	540	51.5	1828	7 — 36x40 DIN5482	-	1 — 1" 3/8 Z6	Z	-	674	9.290.347	35	std

Prolunghe / Extensions TL-290D

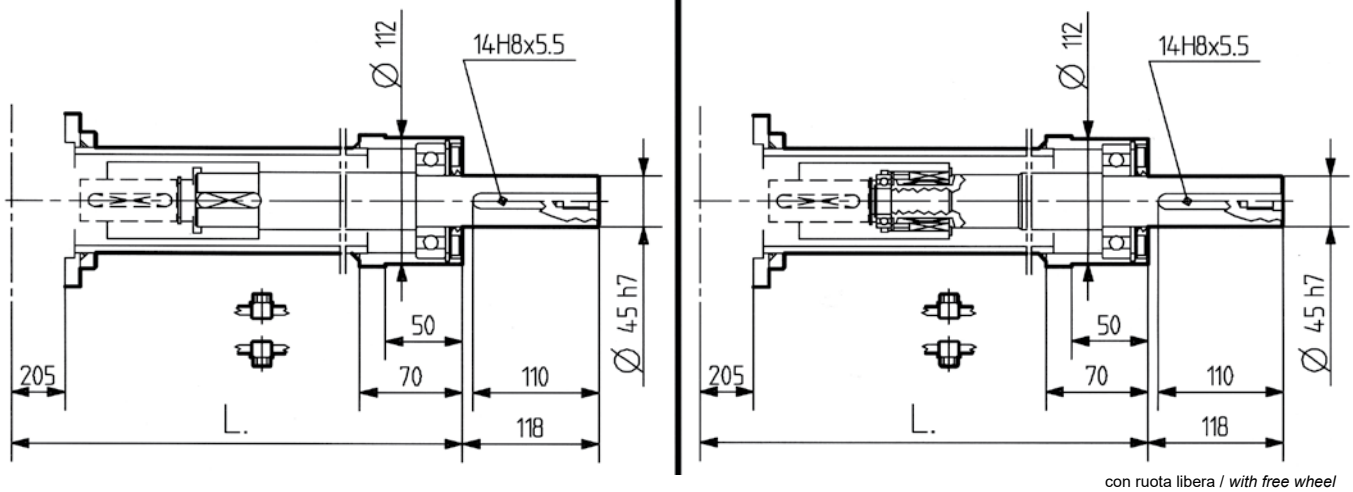

con ruota libera / *with free wheel*

Lunghezze prolunghe Extensions lenghts [mm]	Code
780	9.290.500
990	9.290.501
1060	9.290.502
1115	9.290.527
1240	9.290.503
1400	9.290.505
1365	9.290.504
1560	9.290.507

T-313J

Code **313.8**

(1.01)



[kg] 27 | [l] 1.5

Per configurazioni non a catalogo contattare Servizio Tecnico-Commerciale
For non-catalog configurations contact Technical-Commercial Service

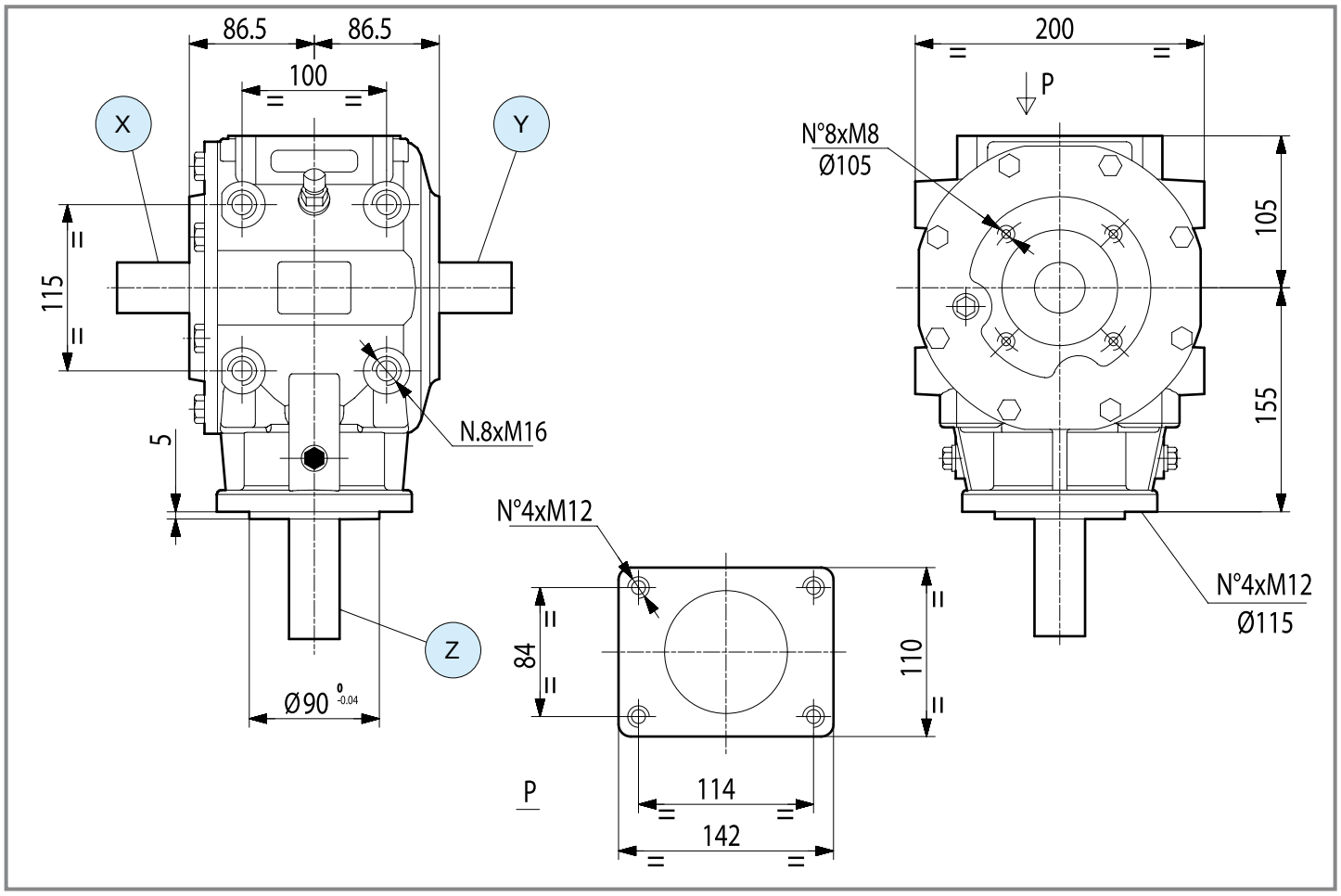

	i	N_1 [rpm]	P_1 [kW]	M_2 [Nm]	Shaft type X	Shaft type Y	Shaft type Z	Input	Option	Lenght [mm]	Code	Mounting	
					1 - Ruota libera / *Free wheel*								
M	3	540	45.6	261	1 — 1" 3/8 Z6	-	14 — L 77 — ø 33	X	1	-	9.313.875	21 22	std
M	3	540	45.6	261	1 — 1" 3/8 Z6	1 — 1" 3/8 Z6	14 — L 77 — ø 33	X	1	-	9.313.870	27 28	std

T-292B

Code **292**

(1.01)



[kg] 33 | [l] 2.5

Per configurazioni non a catalogo contattare Servizio Tecnico-Commerciale
For non-catalog configurations contact Technical-Commercial Service

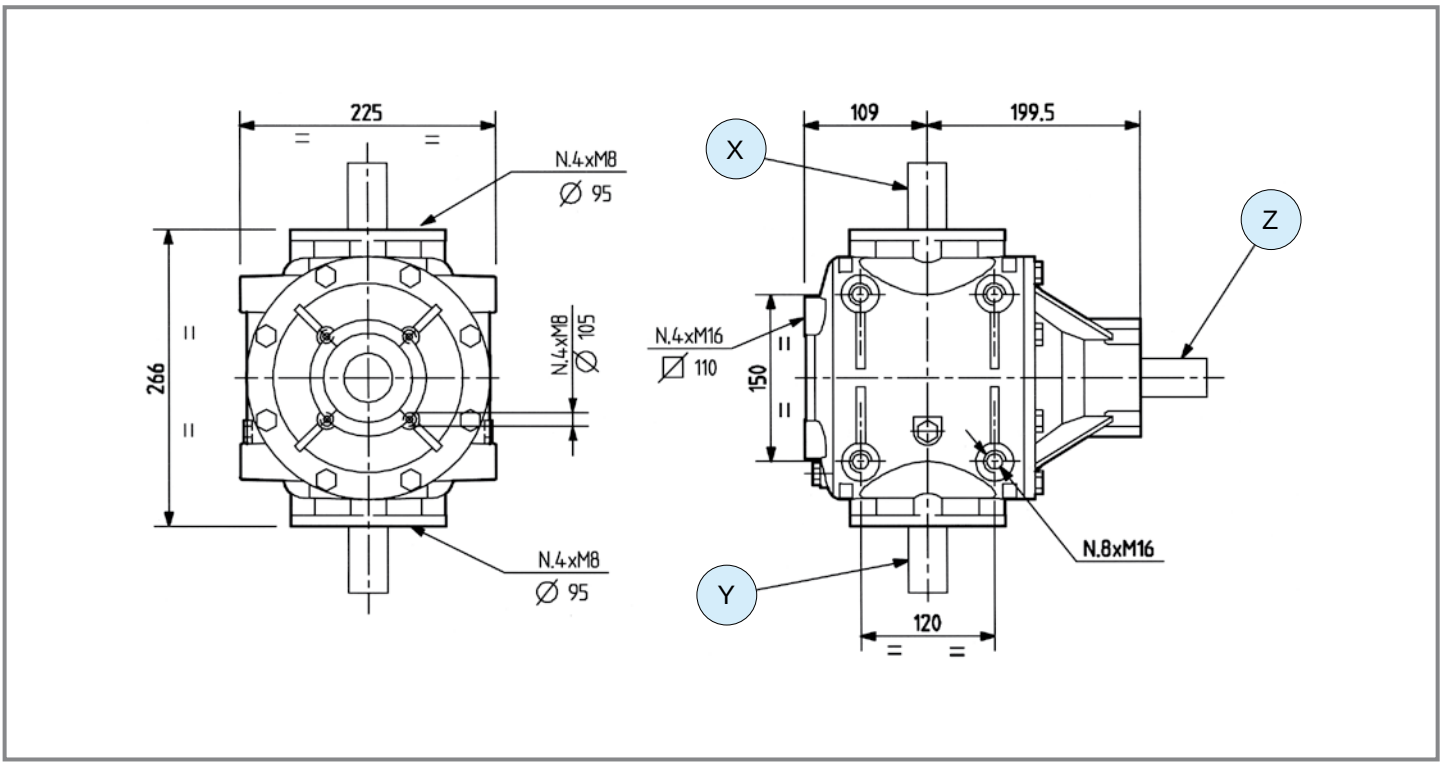

	1 - Ruota libera / *Free wheel*												
	i	**N_1 [rpm]**	**P_1 [kW]**	**M_2 [Nm]**	**Shaft type X**	**Y**	**Z**	**Input**	**Option**	**Lenght [mm]**	**Code**	**Mounting**	
M	**1.86**	540	58.9	542	1 1" 3/8 Z6	1 1" 3/8 Z6	1 1" 3/8 Z6	Z	1	-	9.292.205	33 34	std
M	**1.62**	540	62.5	661	1 1" 3/8 Z6	1 1" 3/8 Z6	1 1" 3/8 Z6	Z	1	-	9.292.206	33 34	std
-	**1**	540	61.8	1059	1 1" 3/8 Z6	1 1" 3/8 Z6	1 1" 3/8 Z6	Z	1	-	9.292.204	33 34	std

T-269B

Code **269**

(1.01)



[kg]	40

[l]	3.3

Per configurazioni non a catalogo contattare Servizio Tecnico-Commerciale
For non-catalog configurations contact Technical-Commercial Service

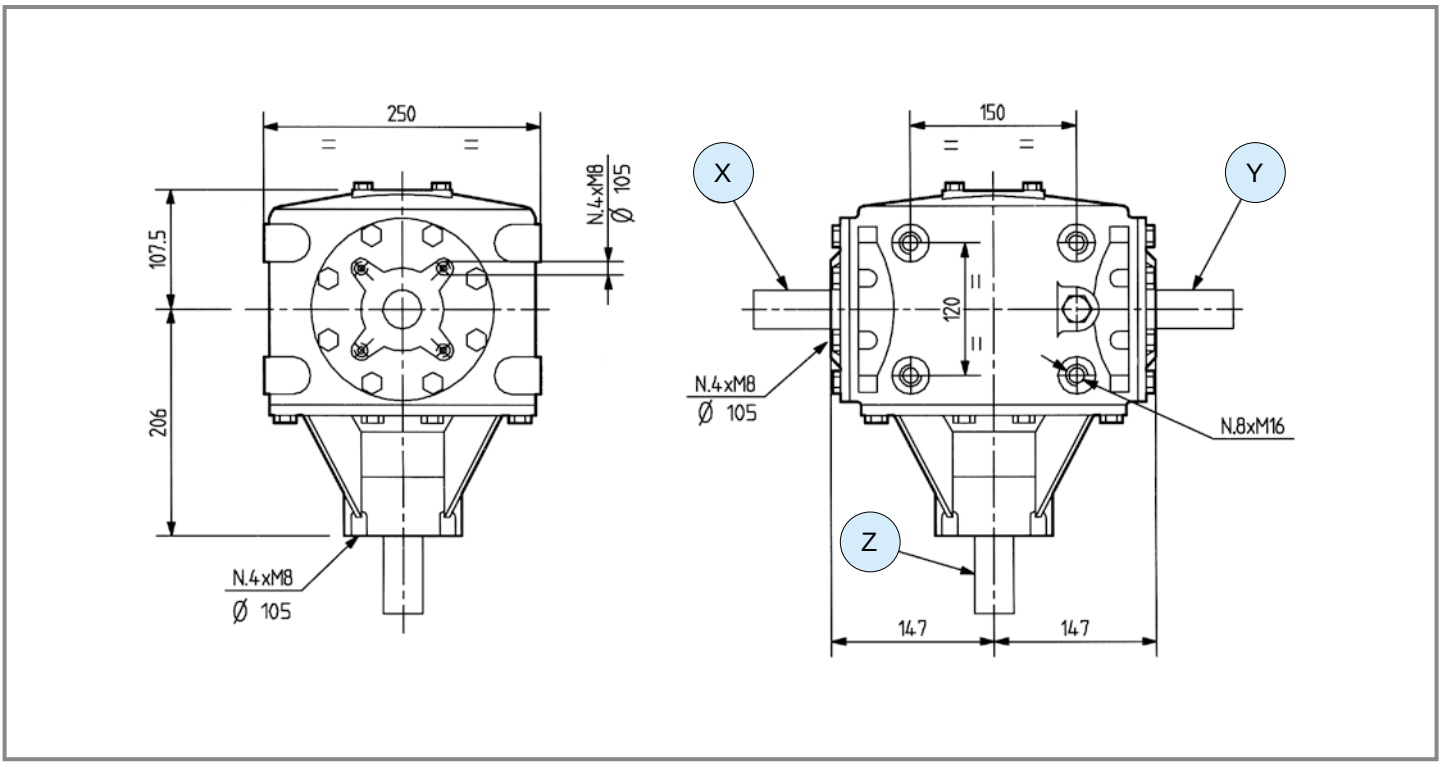

	i	N_1 [rpm]	P_1 [kW]	M_2 [Nm]	1 - Ruota libera / *Free wheel* Shaft type X	Shaft type Y	Shaft type Z	Input	Option	Lenght [mm]	Code	Mounting	
M	**1.93**	540	72.1	640	1 — 1" 3/8 Z6	1 — 1" 3/8 Z6	1 — 1" 3/8 Z6	Z	1	-	9.269.220	33 34	std
M	**1.63**	540	77.3	812	1 — 1" 3/8 Z6	1 — 1" 3/8 Z6	1 — 1" 3/8 Z6	Z	1	-	9.269.221	33 34	std
-	**1**	540	73.6	1261	1 — 1" 3/8 Z6	1 — 1" 3/8 Z6	1 — 1" 3/8 Z6	Z	1	-	9.269.219	33 34	std

T-301B

Code **301**

(1.01)

[kg] 61.5 | [l] 4.4

Per configurazioni non a catalogo contattare Servizio Tecnico-Commerciale
For non-catalog configurations contact Technical-Commercial Service

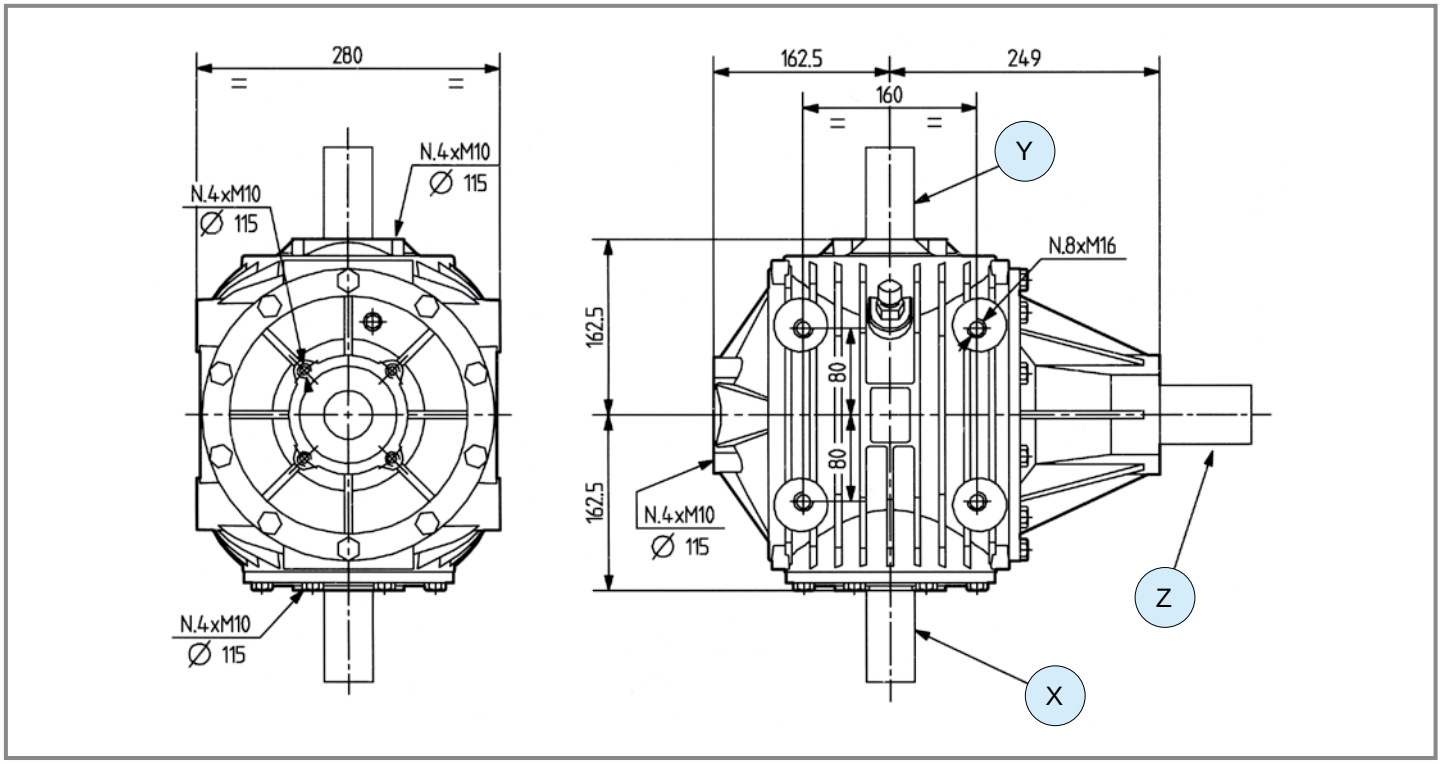

1 - Ruota libera / *Free wheel* 6 - Rinforzato / *Reinforced*

	i	N_1 [rpm]	P_1 [kW]	M_2 [Nm]	Shaft type X	Shaft type Y	Shaft type Z	Input	Option	Lenght [mm]	Code	Mounting	
M	**1.93**	540	80.9	719	5 — 1" 3/4 Z6	5 — 1" 3/4 Z6	5 — 1" 3/4 Z6	Z	-	-	9.301.032	33 34	std
M	**1.93**	540	80.9	719	1 — 1" 3/8 Z6	1 — 1" 3/8 Z6	5 — 1" 3/4 Z6	Z	1	-	9.301.045	33 34	std
M	**1.63**	1000	110.3	638	5 — 1" 3/4 Z6	5 — 1" 3/4 Z6	5 — 1" 3/4 Z6	Z	-	-	9.301.006	33 34	std
M	**1.63**	1000	110.3	638	5 — 1" 3/4 Z6	5 — 1" 3/4 Z6	5 — 1" 3/4 Z6	Z	1	-	9.301.236	33 34	std
M	**1.35**	1000	141.9	973	5 — 1" 3/4 Z6	5 — 1" 3/4 Z6	5 — 1" 3/4 Z6	Z	-	-	9.301.019	33 34	std
M	**1.35**	1000	141.9	973	1 — 1" 3/8 Z6	1 — 1" 3/8 Z6	1 — 1" 3/8 Z6	Z	1	-	9.301.280	33 34	std
-	**1**	1000	152.2	1410	5 — 1" 3/4 Z6	5 — 1" 3/4 Z6	5 — 1" 3/4 Z6	Z	-	-	9.301.016	33 34	std
-	**1**	1000	152.2	1410	5 — 1" 3/4 Z6	5 — 1" 3/4 Z6	5 — 1" 3/4 Z6	Z	1	-	9.301.255	33 34	std
-	**1**	1000	184	1790	5 — 1" 3/4 Z6	5 — 1" 3/4 Z6	5 — 1" 3/4 Z6	Z	1 6	-	9.301.346	33 34	std

T-331A

Code **331**

(1.01)

[kg] 106 | [l] -

Per configurazioni non a catalogo contattare Servizio Tecnico-Commerciale
For non-catalog configurations contact Technical-Commercial Service

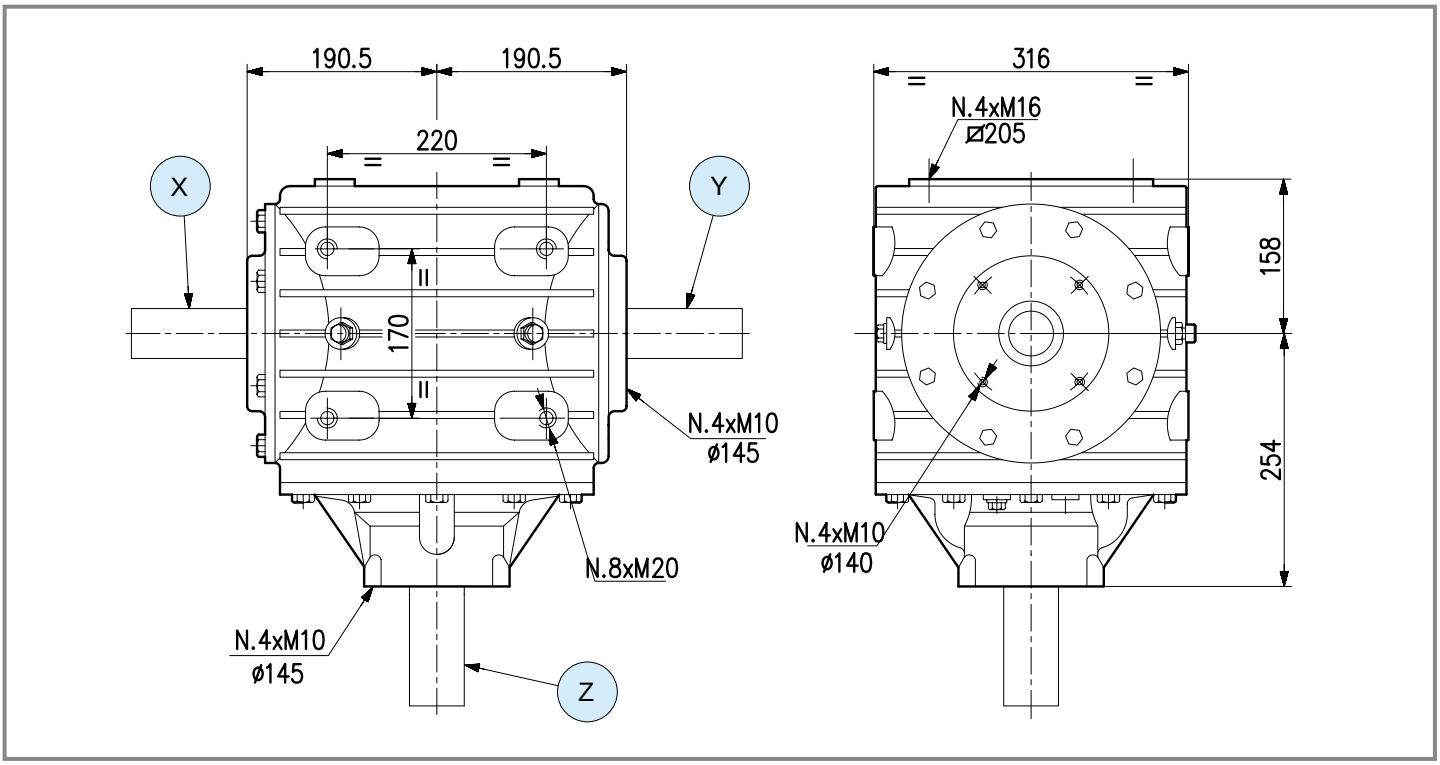

	i	N_1 [rpm]	P_1 [kW]	M_2 [Nm]	1 - Ruota libera / *Free wheel* Shaft type X	Shaft type Y	Shaft type Z	Input	Option	Lenght [mm]	Code	Mounting	
M	**1.92**	540	205.9	1820	5 1" 3/4 Z6	5 1" 3/4 Z6	5 1" 3/4 Z6	Z	-	-	9.331.000	33 34	std
M	**1.53**	1000	242	1570	5 1" 3/4 Z6	5 1" 3/4 Z6	5 1" 3/4 Z6	Z	1	-	9.331.006	33 34	std
M	**1.35**	1000	205.9	1412	5 1" 3/4 Z6	5 1" 3/4 Z6	5 1" 3/4 Z6	Z	1	-	9.331.008	33 34	std
-	**1**	1000	264.7	2451	5 1" 3/4 Z6	5 1" 3/4 Z6	5 1" 3/4 Z6	Z	1	-	9.331.017	33 34	std
-	**1**	1000	264.7	2451	5 1" 3/4 Z6	5 1" 3/4 Z6	5 1" 3/4 Z6	Z	-	-	9.331.019	33 34	std

Questa pagina è lasciata intenzionalmente bianca
This page is intentionally left blank

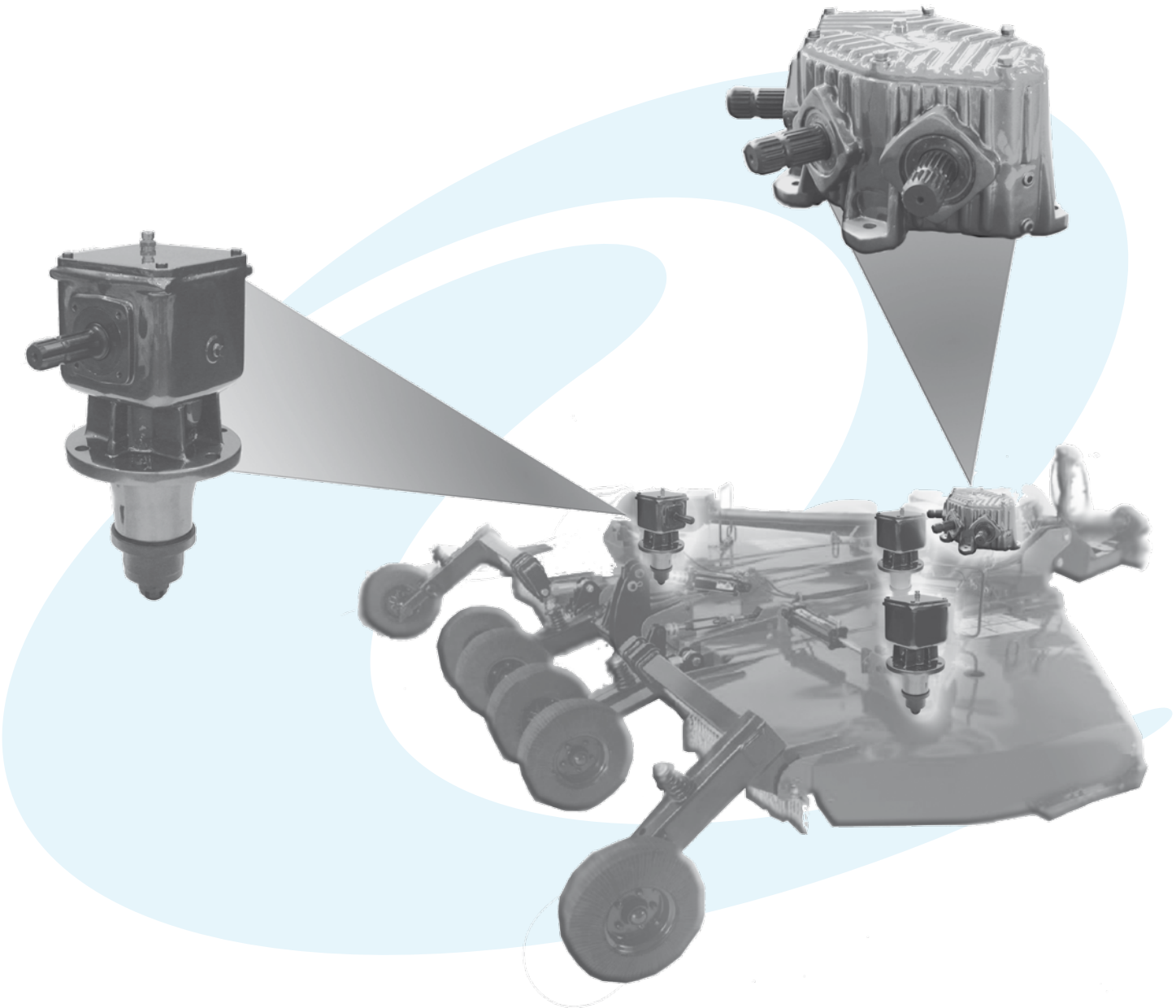

(1.02) Falciadistruggierba / *Rotary Mowers*

(1.03) Decespugliatore / *Rotary cutters*

Per configurazioni non a catalogo contattare Servizio Tecnico-Commerciale
For non-catalog configurations contact Technical-Commercial Service

	i	$P_{1\text{ - max}}$ [kW]	$M_{2\text{ - max}}$ [Nm]	Tipologia alberi disponibili *Available type of shafts*	p.
LF-211J	M 2.83 - - R -	14.7	89	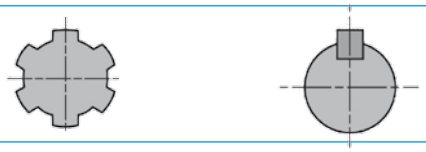	86
LF-151A	M 1.90 ÷3.30 - - R -	40.4	365	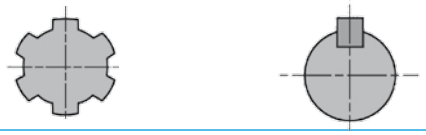	87
LF-205J	M 1.47 ÷1.92 - - R -	29.5	344	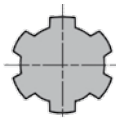	88
LF-140J **LF-140A**	M 1.27 ÷1.93 - 1.00 R -	44	594	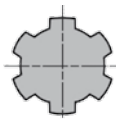	89
LF-32A	M 1.93 - 1.00 R -	44.2	756	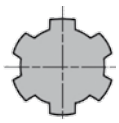	90
LF-149B	M 1.35 ÷1.83 - 1.00 R -	66.2	654	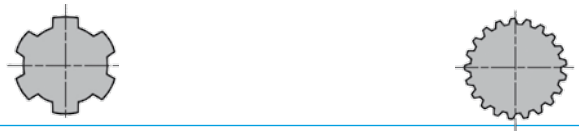	91
LF-139A	M 1.20 ÷1.50 - - R -	66	755	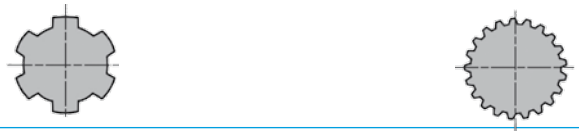	92
LF-227J	M 1.44 ÷1.83 - - R -	55.1	656	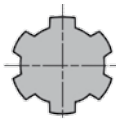	93
LF-125J	M 1.77 - 1.00 R -	93	901	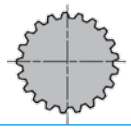	94
TF-26A	M 1.47 ÷1.84 - - R -	66	770	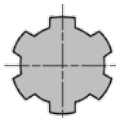	95
TF-285B	M 1.20 - - R -	91.9	709	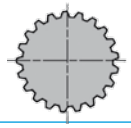	96
T-25J	M 1.20 ÷1.35 - - R 1.20 ÷1.35	130	1445	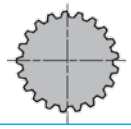	97
T-305J	M 1.35 - - R 1.20 ÷1.35	183.8	2335	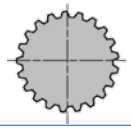	98

LF-211J

Code **211.8**

(1.02)



[kg] 16 | [l] 0.8

Per configurazioni non a catalogo contattare Servizio Tecnico-Commerciale
For non-catalog configurations contact Technical-Commercial Service

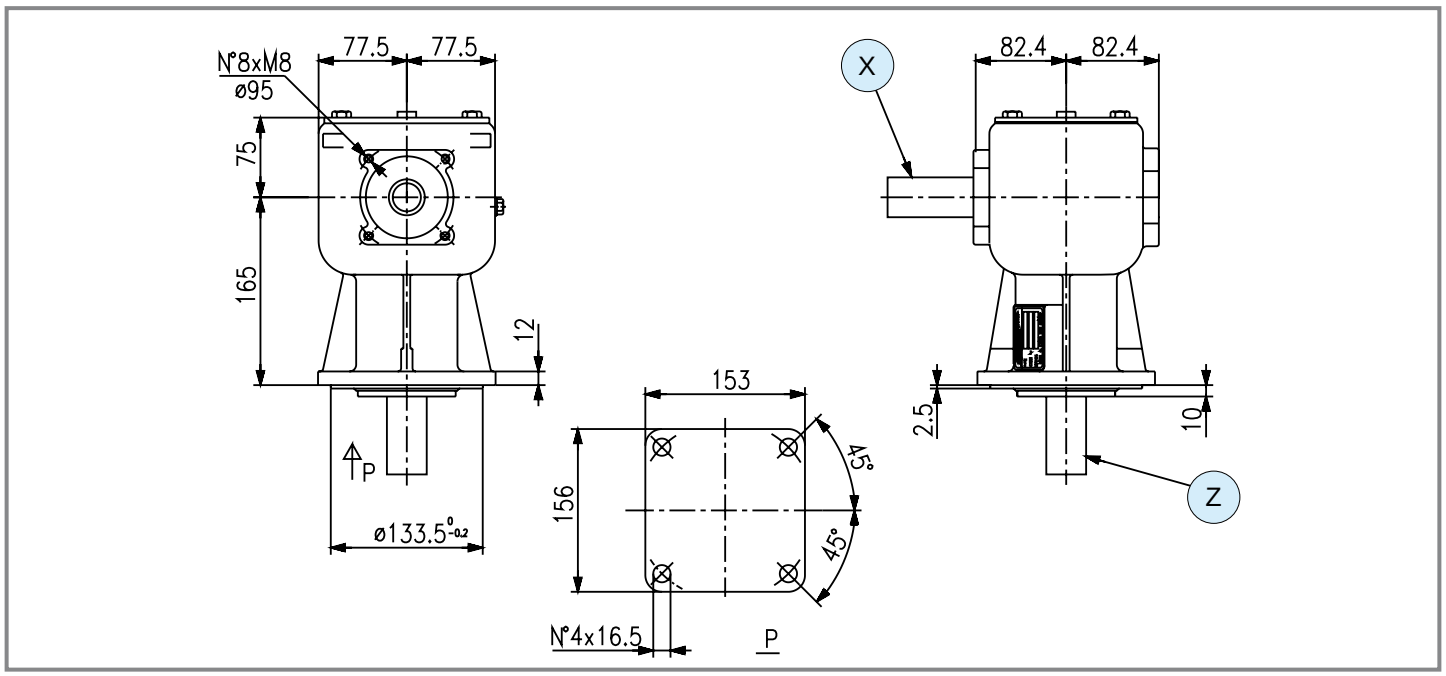

	i	N_1 [rpm]	P_1 [kW]	M_2 [Nm]	Shaft type X	Shaft type Y	Shaft type Z	Input	Option	Code	Mounting	
M	**2.83**	540	14.7	89	1 — 1" 3/8 Z6	-	14 — L 83, ø 33	X	-	9.211.802	21 22	std
	2.83	540	14.7	89	1 — 1" 3/8 Z6	-	14 — L 83, ø 33	X	-	9.211.803	23 24	std

LF-151A

Code 151

(1.02)



[kg] 21.5 | [I] 1.3

Per configurazioni non a catalogo contattare Servizio Tecnico-Commerciale
For non-catalog configurations contact Technical-Commercial Service

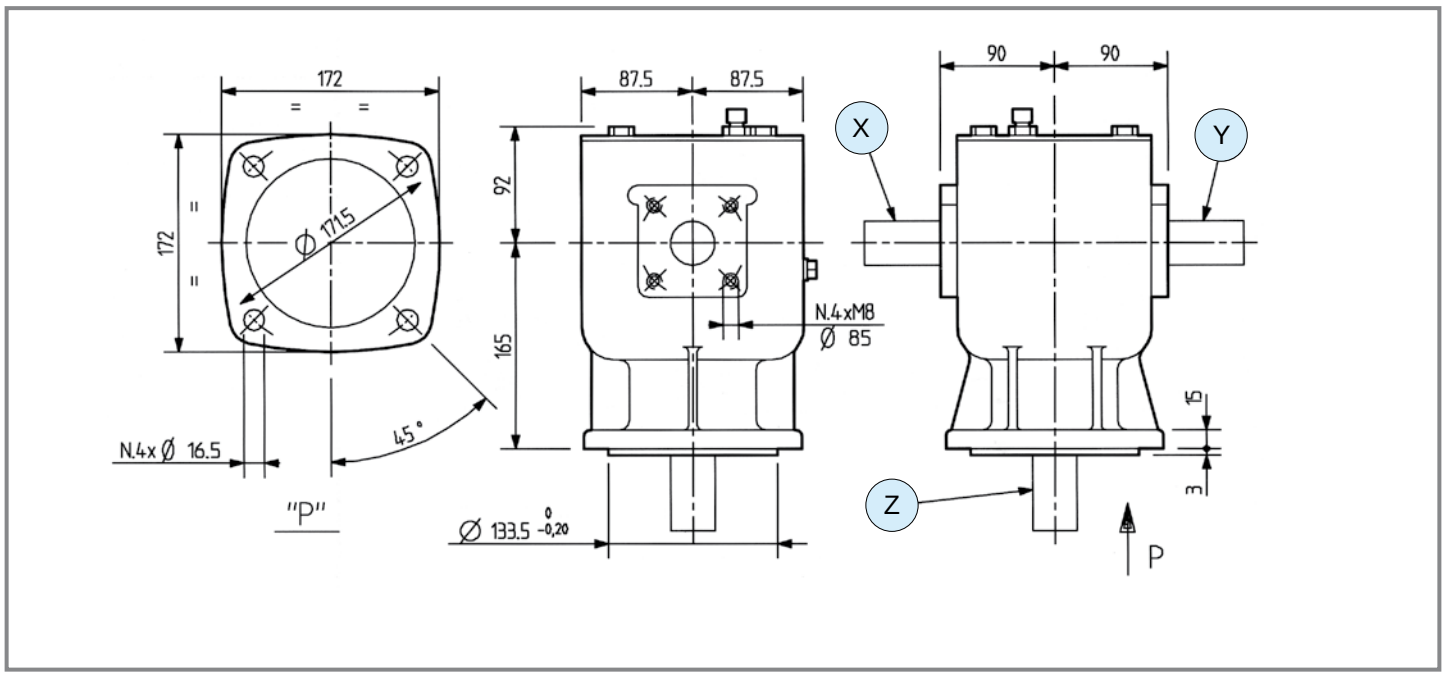

	i	N_1 [rpm]	P_1 [kW]	M_2 [Nm]	Shaft type X	Shaft type Y	Shaft type Z	Input	Option	Code	Mounting	
M	**3.30**	540	29.4	153	1 — 1" 3/8 Z6	-	14 — L 83 — ø 33	X	-	9.151.306	21 22	std
	3.00	540	33	189	1 — 1" 3/8 Z6	-	3 — L 91 — ø 35	X	-	9.151.000	21 22	std
	3.00	540	33	189	1 — 1" 3/8 Z6	-	3 — L 91 — ø 35	X	-	9.151.001	23 24	std
	3.00	540	33	189	3 — L 80 — ø 35	-	3 — L 91 — ø 35	X	-	9.151.100	21 22	std
	2.54	540	35.3	238	1 — 1" 3/8 Z6	-	3 — L 91 — ø 35	X	-	9.151.002	21 22	std
	2.54	540	35.3	238	1 — 1" 3/8 Z6	-	3 — L 91 — ø 35	X	-	9.151.003	23 24	std
	2.54	540	35.3	238	1 — 1" 3/8 Z6	1 — 1" 3/8 Z6	14 — L 91 — ø 33	X	-	9.151.009	25 26	std
	1.90	540	40.4	365	1 — 1" 3/8 Z6	-	14 — L 70 — ø 33	X	-	9.151.013	23 24	std

LF-205J

Code **205.8**

(1.03)



[kg] 16 | [l] 0.8

Per configurazioni non a catalogo contattare Servizio Tecnico-Commerciale
For non-catalog configurations contact Technical-Commercial Service

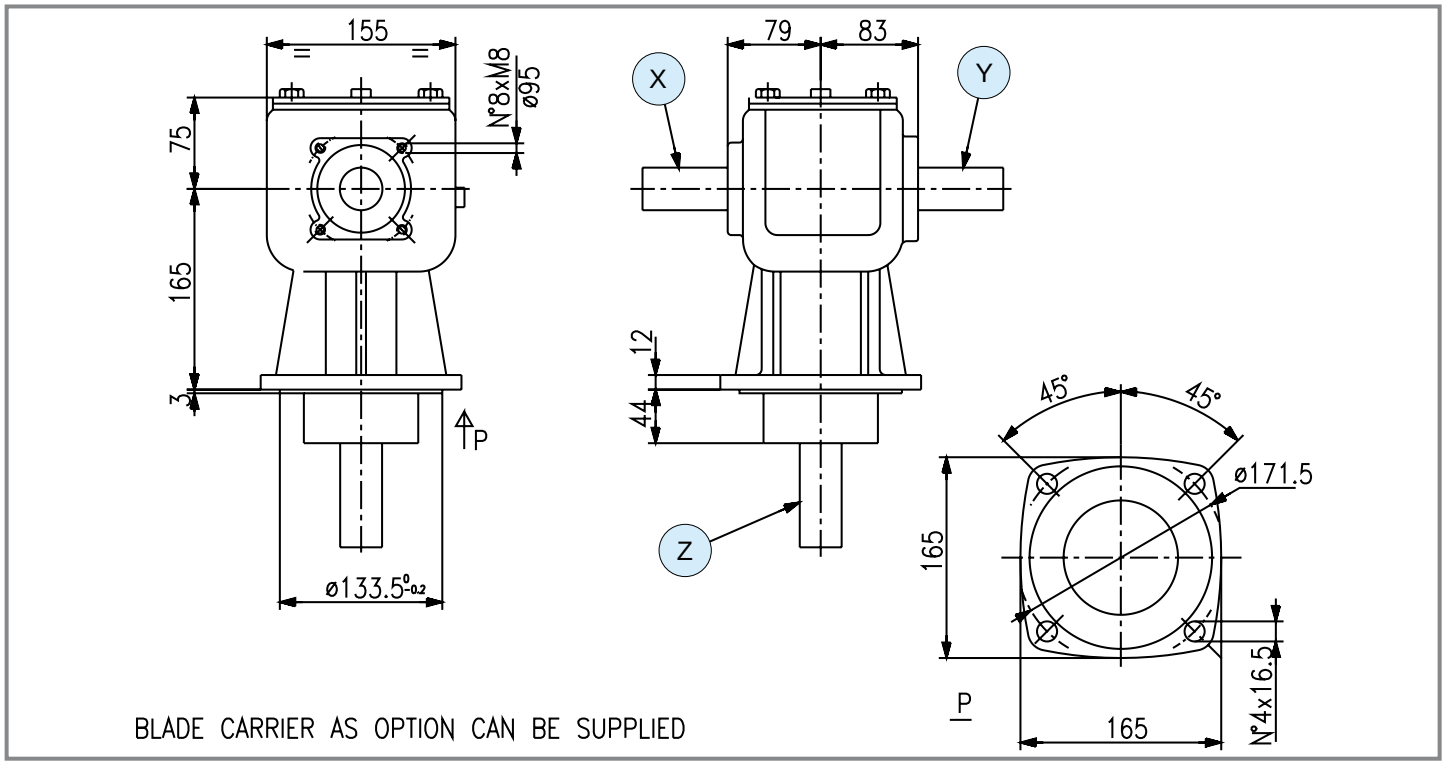

	1 - Ruota libera / *Free wheel*											
	i	**N_1 [rpm]**	**P_1 [kW]**	**M_2 [Nm]**	**Shaft type** X	Y	Z	**Input**	**Option**	**Code**	**Mounting**	
M → +	**1.92**	540	22	197	1 1" 3/8 Z6	-	Hub Connection	X	-	9.205.805	21 22	std
	1.92	540	22	197	1 1" 3/8 Z6	1 1" 3/8 Z6	Hub Connection	Y	-	9.205.809	27 28	std
	1.92	540	22	197	1 1" 3/8 Z6	-	Hub Connection	Y	1	9.205.879	21 22	std
	1.47	540	29.5	344	1 1" 3/8 Z6	-	Hub Connection	X	-	9.205.829	23 24	std
	1.47	540	29.5	344	1 1" 3/8 Z6	-	Hub Connection	X	-	9.205.801	21 22	std

comer industries

LF-140J | LF-140A

Code 140.8 | Code 140

(1.03)



[kg] 30 | [l] -

Per configurazioni non a catalogo contattare Servizio Tecnico-Commerciale
For non-catalog configurations contact Technical-Commercial Service

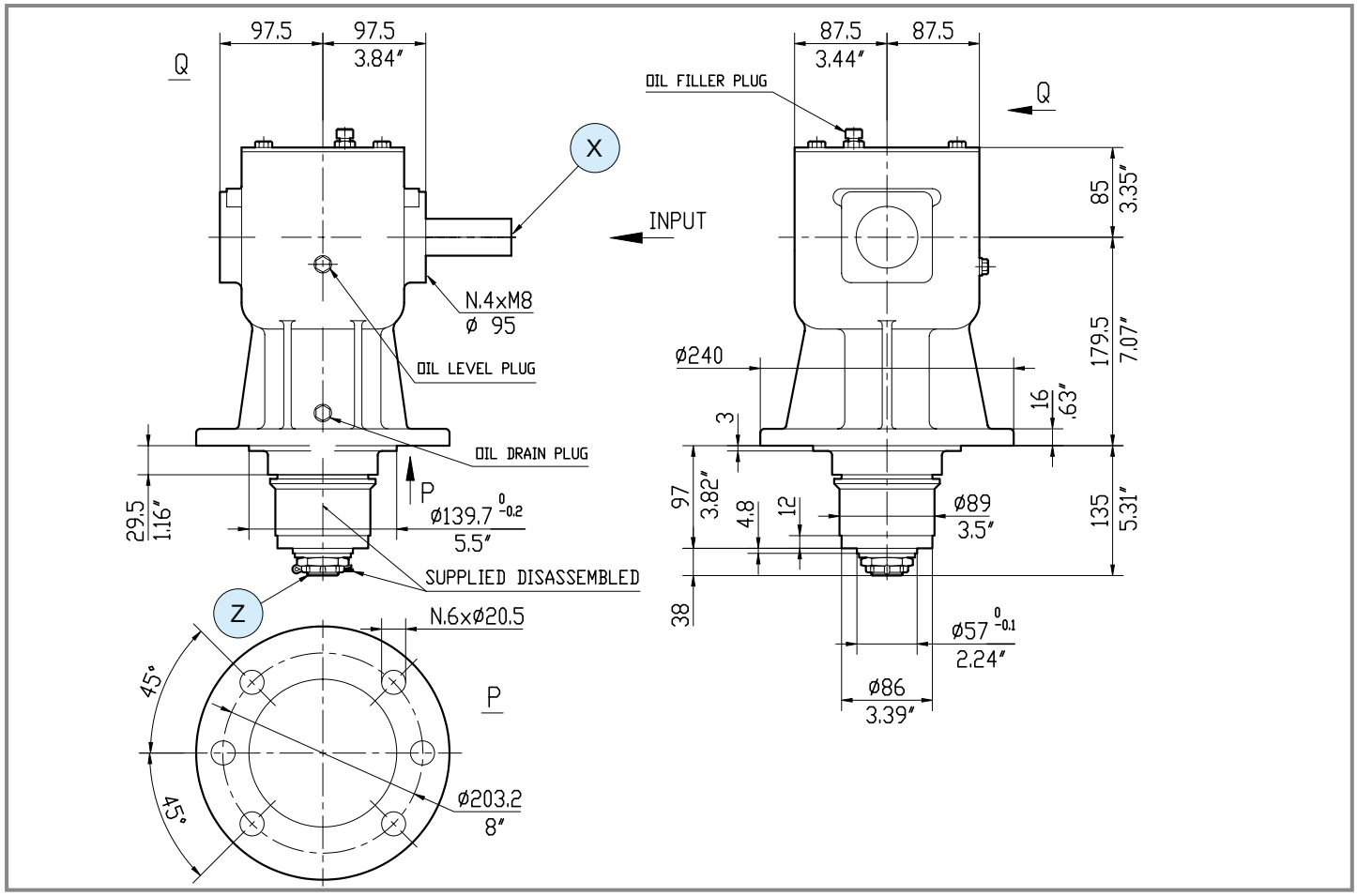

1 - Ruota libera / *Free wheel*

	i	N_1 [rpm]	P_1 [kW]	M_2 [Nm]	Shaft type X	Shaft type Y	Shaft type Z	Input	Option	Code	Mounting	
	1.93	540	44	391	1 1" 3/8 Z6	-	Hub Connection	X	-	9.140.804	21 22	std
	1.93	540	44	391	1 1" 3/8 Z6	1 1" 3/8 Z6	Hub Connection	X	-	9.140.872	27 28	std
	1.93	540	44	391	1 1" 3/8 Z6	-	Hub Connection	X	-	9.140.876	23 24	std
M	**1.93**	540	44	391	1 1" 3/8 Z6	-	Hub Connection	X	1	9.140.878	21 22	std
	1.50	540	44	503	1 1" 3/8 Z6	-	Hub Connection	X	-	9.140.810	23 24	std
	1.50	540	44	503	1 1" 3/8 Z6	-	Hub Connection	X	-	9.140.811	21 22	std
	1.27	540	44	594	1 1" 3/8 Z6	1 1" 3/8 Z6	Hub Connection	Y	-	9.140.211	27 28	std
-	**1.00**	540	44	76	1 1" 3/8 Z6	-	Hub Connection	X	-	9.140.881	27 28	std

LF-32A

Code **132**

(1.03)

[kg] 30 | [l] 2.0

Per configurazioni non a catalogo contattare Servizio Tecnico-Commerciale
For non-catalog configurations contact Technical-Commercial Service

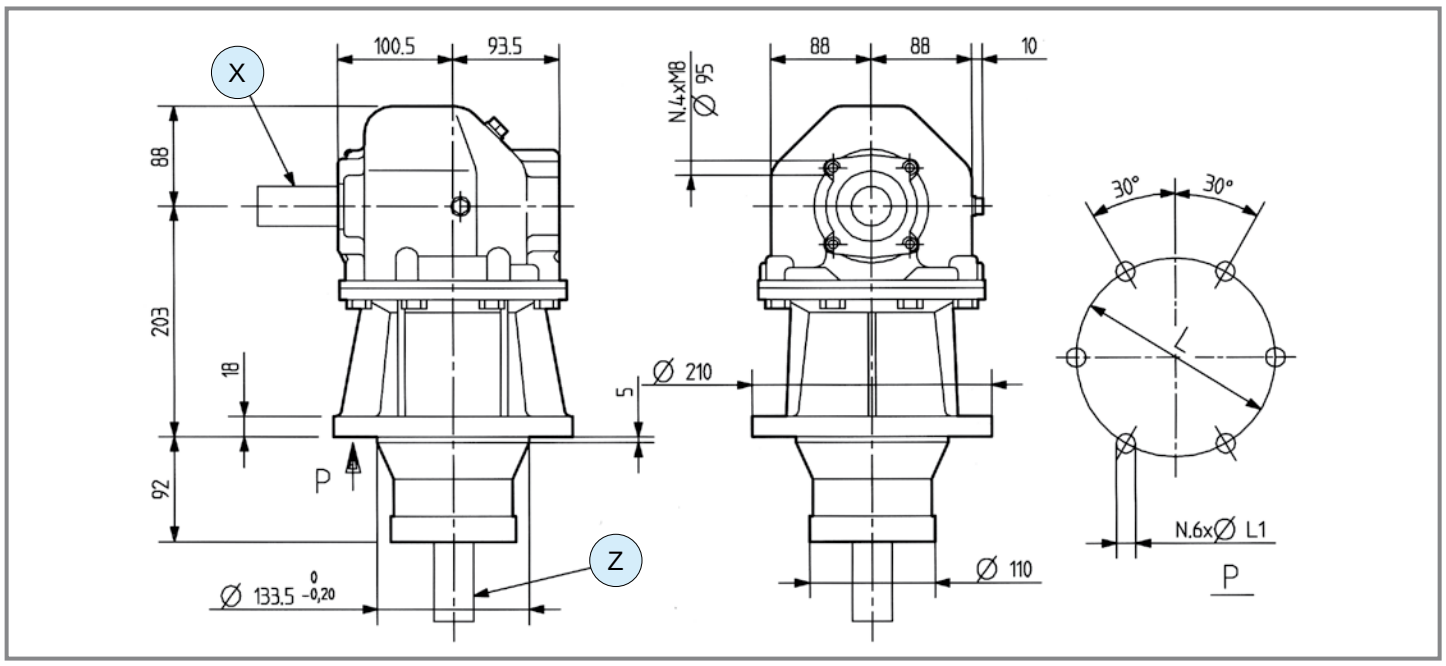

	i	N_1 [rpm]	P_1 [kW]	M_2 [Nm]	Shaft type X	Shaft type Y	Shaft type Z	Input	Option	Code	Mounting	
M	**1.93**	540	44.2	393	1  1" 3/8 Z6	-	Hub Connection	X	-	9.132.003	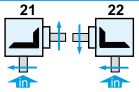	std
-	**1.00**	540	44.1	756	1  1" 3/8 Z6	-	Hub Connection	X	-	9.132.007	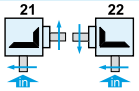	std
	1.00	540	44.1	756	1  1" 3/8 Z6	-	Hub Connection	X	-	9.132.009	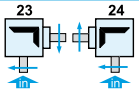	std

LF-149B

Code **149**

(1.03)

[kg] 32 | [l] 2.4

Per configurazioni non a catalogo contattare Servizio Tecnico-Commerciale
For non-catalog configurations contact Technical-Commercial Service

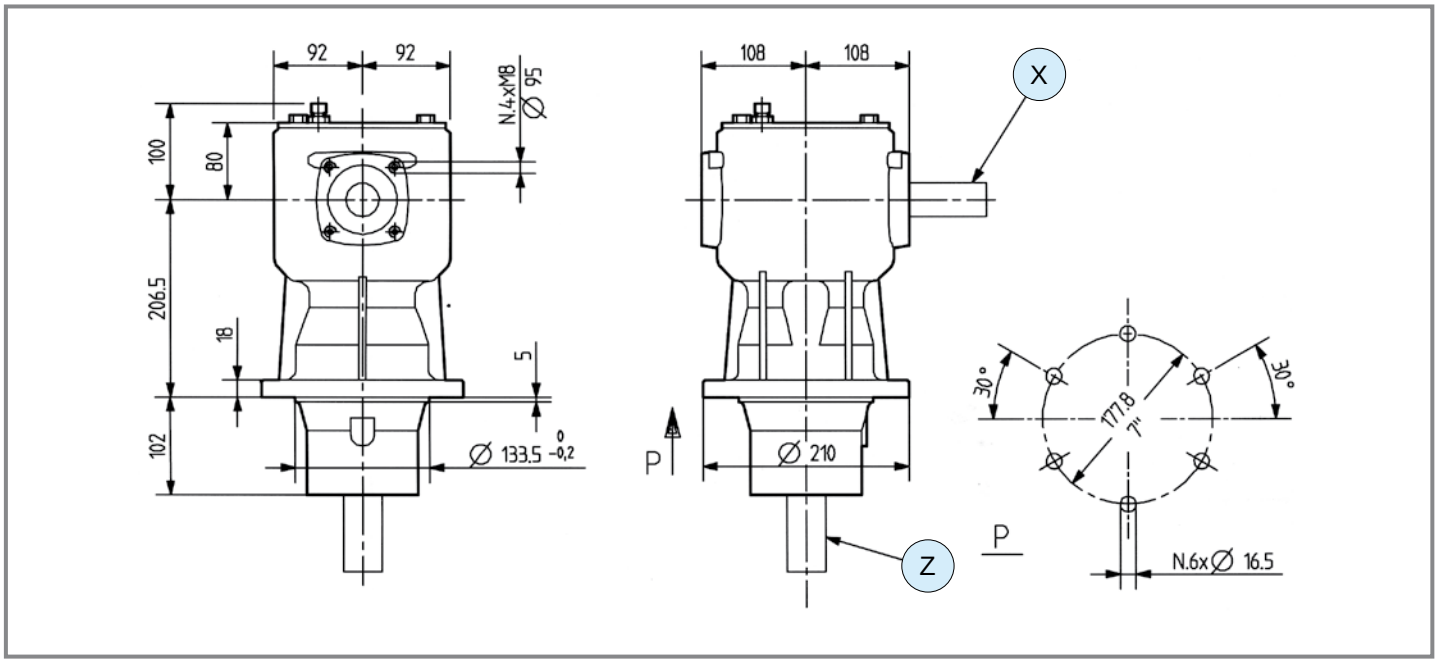

	i	N_1 [rpm]	P_1 [kW]	M_2 [Nm]	Shaft type X	Shaft type Y	Shaft type Z	Input	Option	Code	Mounting	
M	**1.83**	540	51.5	483	1 — 1" 3/8 Z6	-	Hub Connection	X	-	9.149.016	21 / 22	std
M	**1.35**	540	51.5	654	1 — 1" 3/8 Z6	-	Hub Connection	X	-	9.149.034	21 / 22	std
-	**1.00**	1000	66.2	613	2 — 1" 3/8 Z21	-	Hub Connection	X	-	9.149.029	21 / 22	std
-	**1.00**	1000	66.2	613	2 — 1" 3/8 Z21	-	Hub Connection	X	-	9.149.033	23 / 24	std

LF-139A

Code **139**

(1.03)



[kg] 39 | [l] 3.0

Per configurazioni non a catalogo contattare Servizio Tecnico-Commerciale
For non-catalog configurations contact Technical-Commercial Service

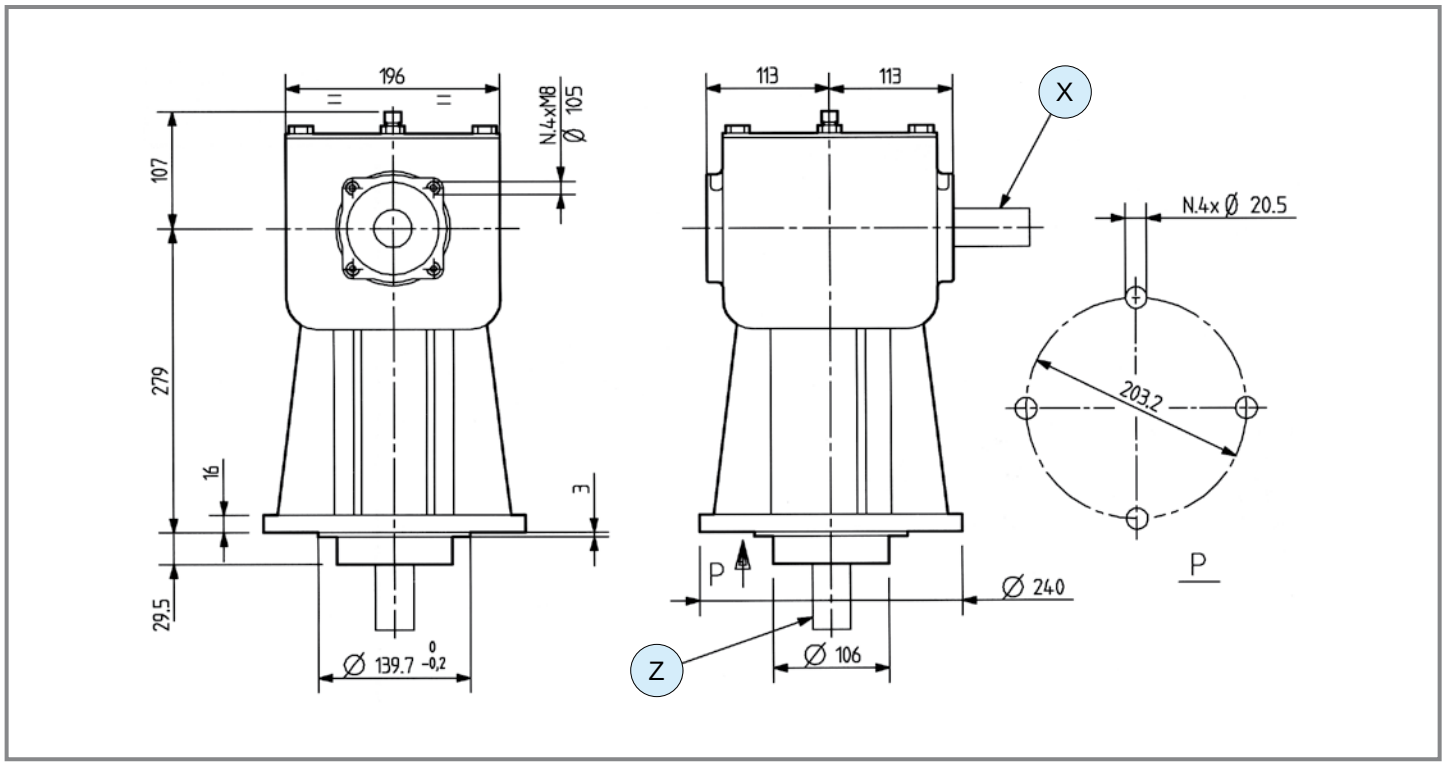

	i	N_1 [rpm]	P_1 [kW]	M_2 [Nm]	Shaft type X	Shaft type Y	Shaft type Z	Input	Option	Code	Mounting	
M ⇨ +	**1.50**	540	66	755	1  1" 3/8 Z6	-	Hub Connection	X	-	9.139.001	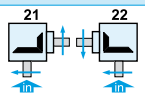	std
	1.50	540	66	755	6  1" 3/4 Z20	-	Hub Connection	X	-	9.139.200	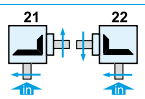	std
	1.50	540	66	755	6  1" 3/4 Z20	-	Hub Connection	X	-	9.139.201	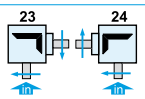	std
	1.20	1000	66	509	6  1" 3/4 Z20	-	Hub Connection	X	-	9.139.016	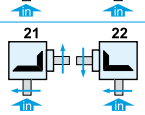	std
	1.20	1000	66	509	6 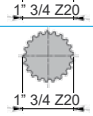 1" 3/4 Z20	-	Hub Connection	X	-	9.139.017	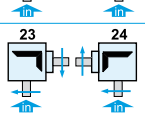	std

LF-227J

Code **227.8**

(1.03)



[kg] 39.3 | [l] 2.5

Per configurazioni non a catalogo contattare Servizio Tecnico-Commerciale
For non-catalog configurations contact Technical-Commercial Service

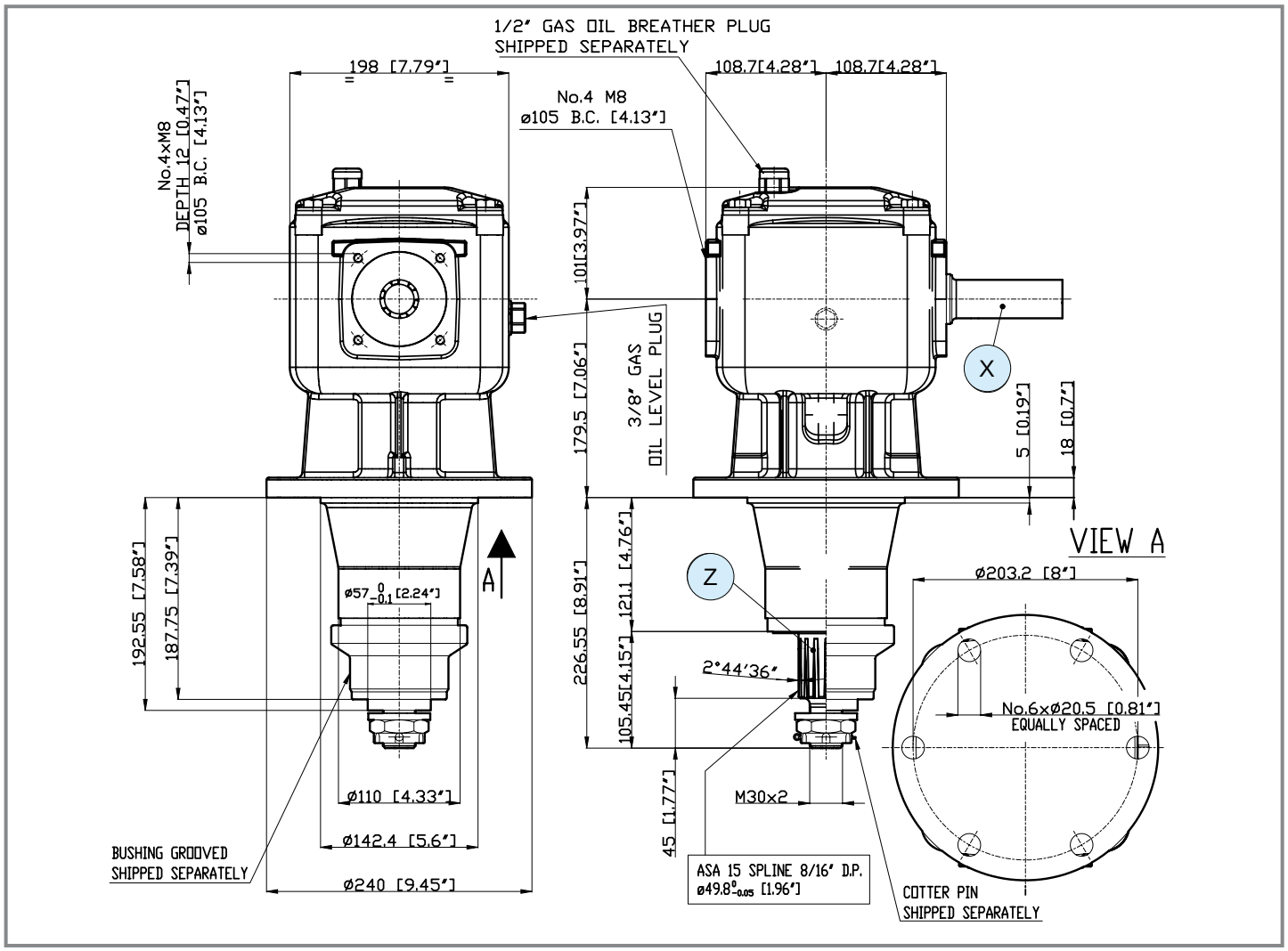

	i	N_1 [rpm]	P_1 [kW]	M_2 [Nm]	Shaft type X	Shaft type Y	Shaft type Z	Input	Option	Code	Mounting	
M	**1.83**	540	55.1	516	1  1" 3/8 Z6	-	Hub Connection	X	-	9.227.804	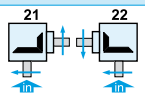	std
	1.44	540	55.1	656	1  1" 3/8 Z6	-	Hub Connection	X	-	9.227.801	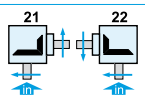	std

LF-125J

Code **125.8**

(1.03)

[kg]	60
[l]	5.8

Per configurazioni non a catalogo contattare Servizio Tecnico-Commerciale
For non-catalog configurations contact Technical-Commercial Service

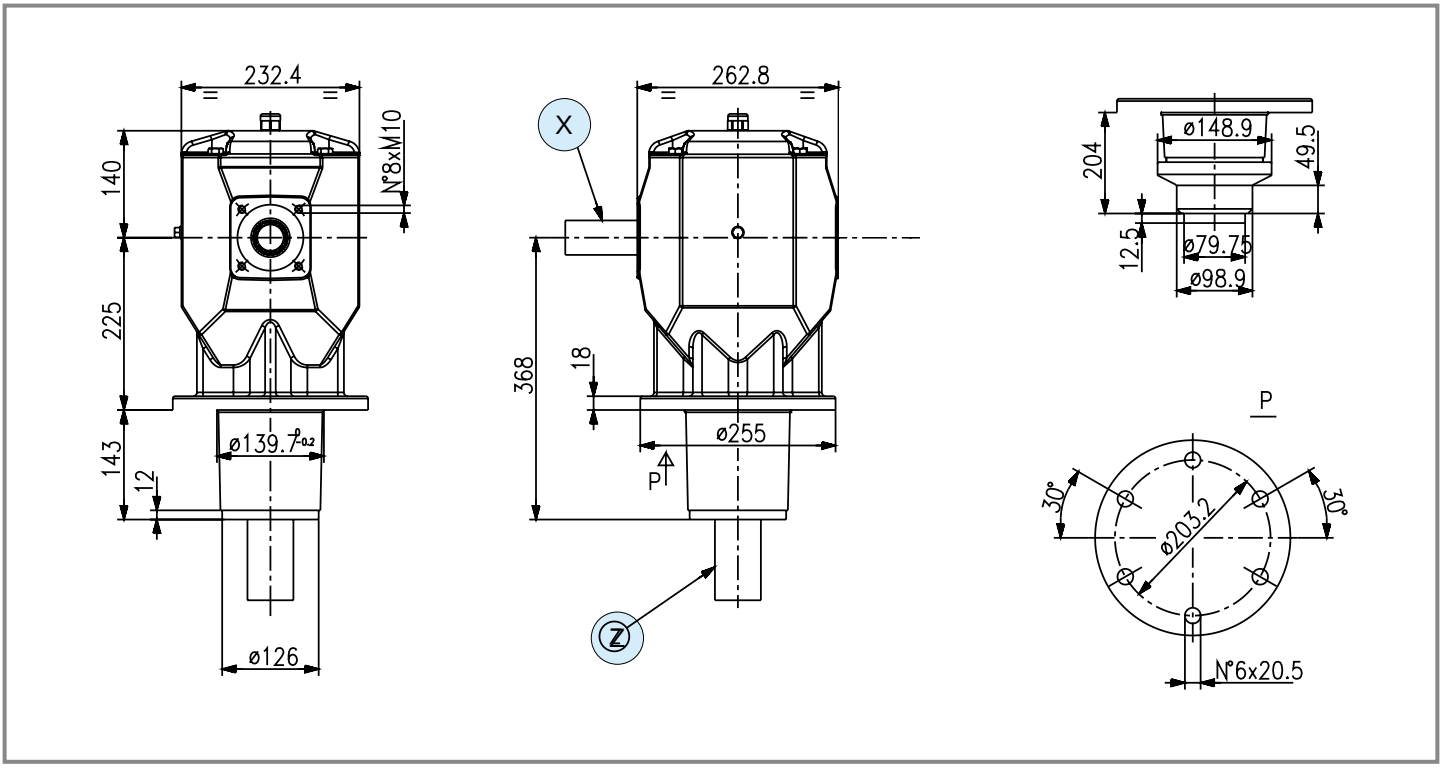

	i	N_1 [rpm]	P_1 [kW]	M_2 [Nm]	Shaft type X	Shaft type Y	Shaft type Z	Input	Option	Code	Mounting	
M	**1.77**	540	93	901	6 1" 3/4 Z20	-	Hub Connection	X	-	9.125.874	21 22	std
-	**1.00**	1000	93	861	6 1" 3/4 Z20	-	Hub Connection	X	-	9.125.872	23 24	std

TF-26A

Code **266**

(1.03)

[kg] 34 | [l] 2.2

Per configurazioni non a catalogo contattare Servizio Tecnico-Commerciale
For non-catalog configurations contact Technical-Commercial Service

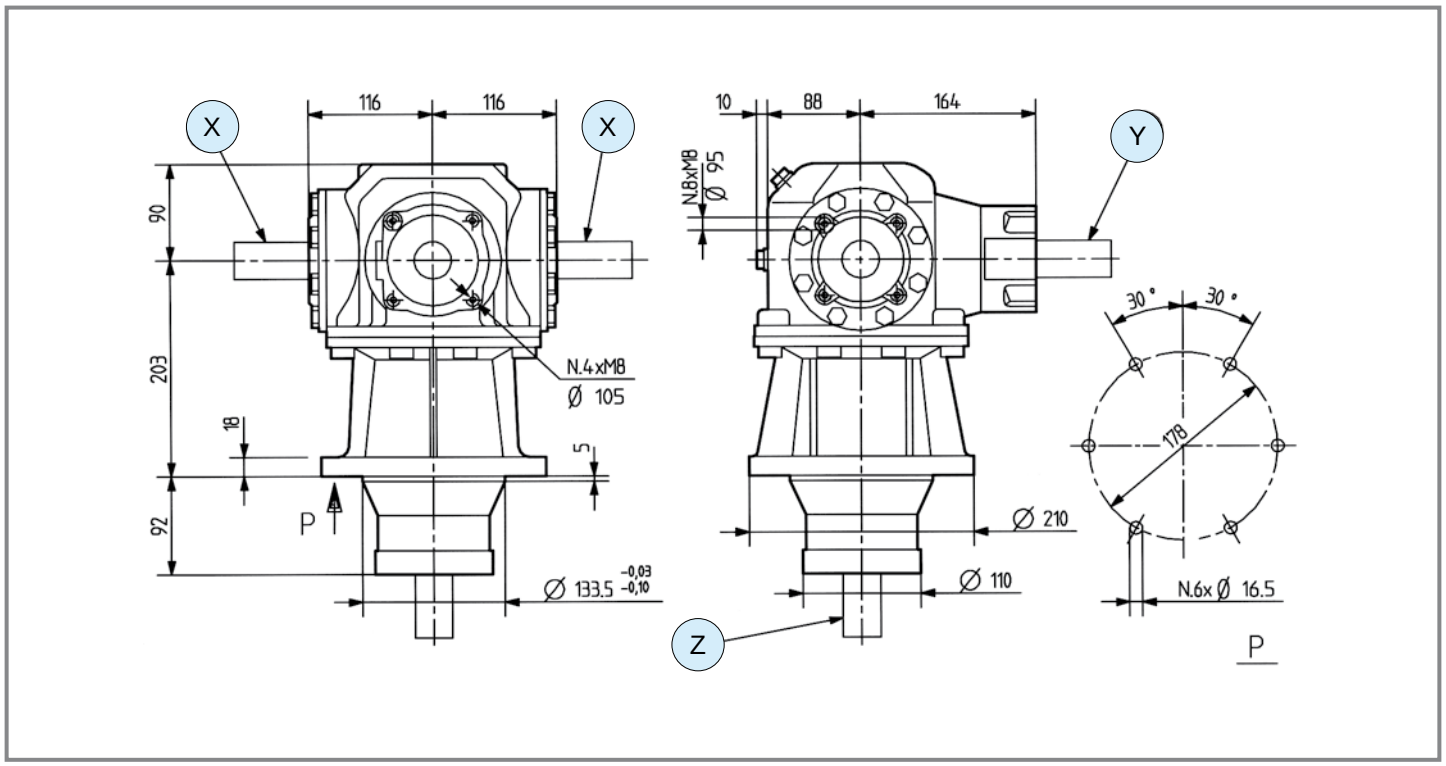

	i	N_1 [rpm]	P_1 [kW]	M_2 [Nm]	Shaft type X	Shaft type Y	Shaft type Z	Input	Option	Code	Mounting	
M	**1.84**	540	66	615	1 1" 3/8 Z6	1 1" 3/8 Z6	Hub Connection	X	-	9.266.008	224	std
	1.47	540	66	770	1 1" 3/8 Z6	1 1" 3/8 Z6	Hub Connection	X	-	9.266.205	224	std

TF-285B

Code **285**

(1.03)

[kg] 50 | [l] 3.2

Per configurazioni non a catalogo contattare Servizio Tecnico-Commerciale
For non-catalog configurations contact Technical-Commercial Service

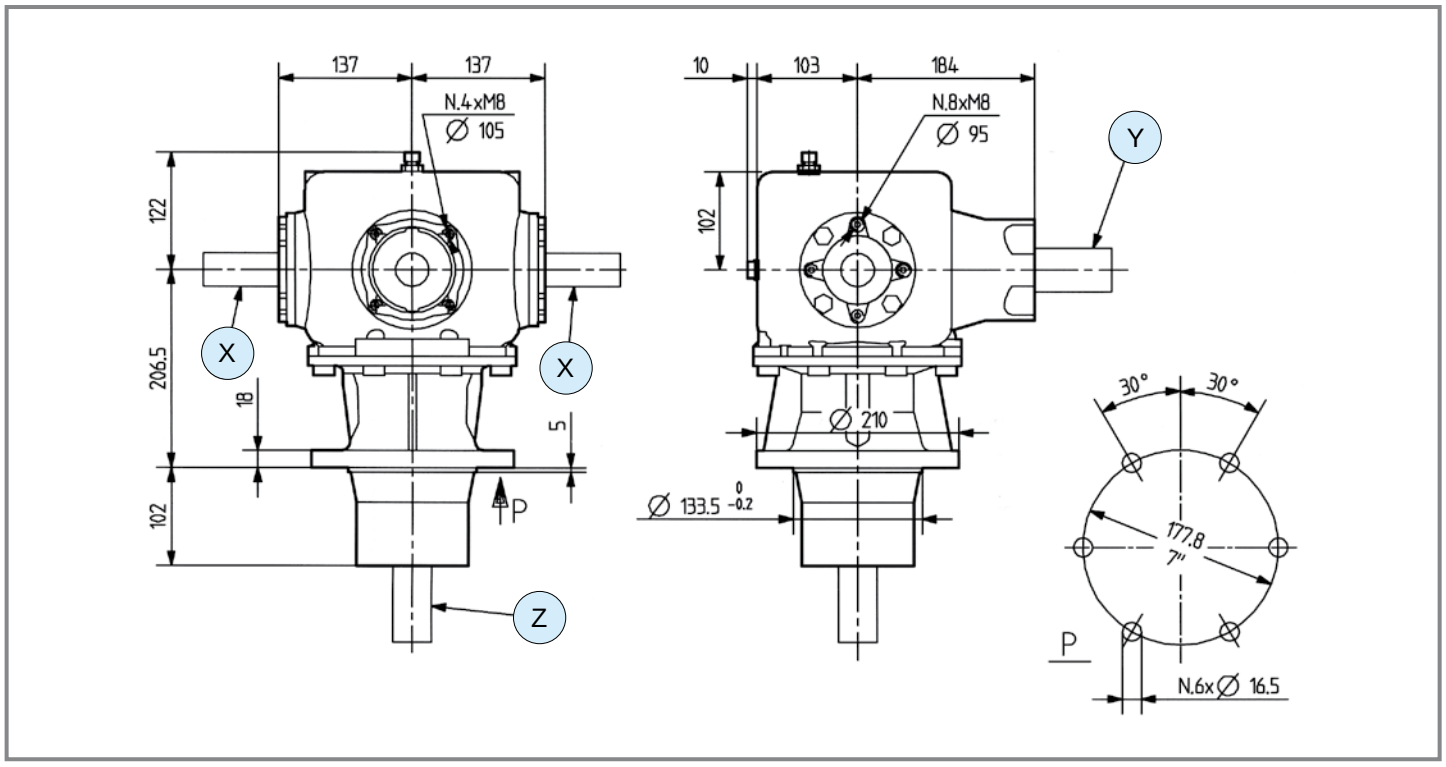

	i	N_1 [rpm]	P_1 [kW]	M_2 [Nm]	Shaft type X	Shaft type Y	Shaft type Z	Input	Option	Code	Mounting	
M	**1.20**	1000	91.9	709	2  1" 3/8 Z21	6  1" 3/4 Z20	Hub Connection	Y	-	9.285.013	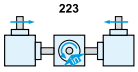 223	std

comer industries

T-25J

Code **265.8**

(1.03)

[kg] 39.5 | [l] 1.8

Per configurazioni non a catalogo contattare Servizio Tecnico-Commerciale
For non-catalog configurations contact Technical-Commercial Service

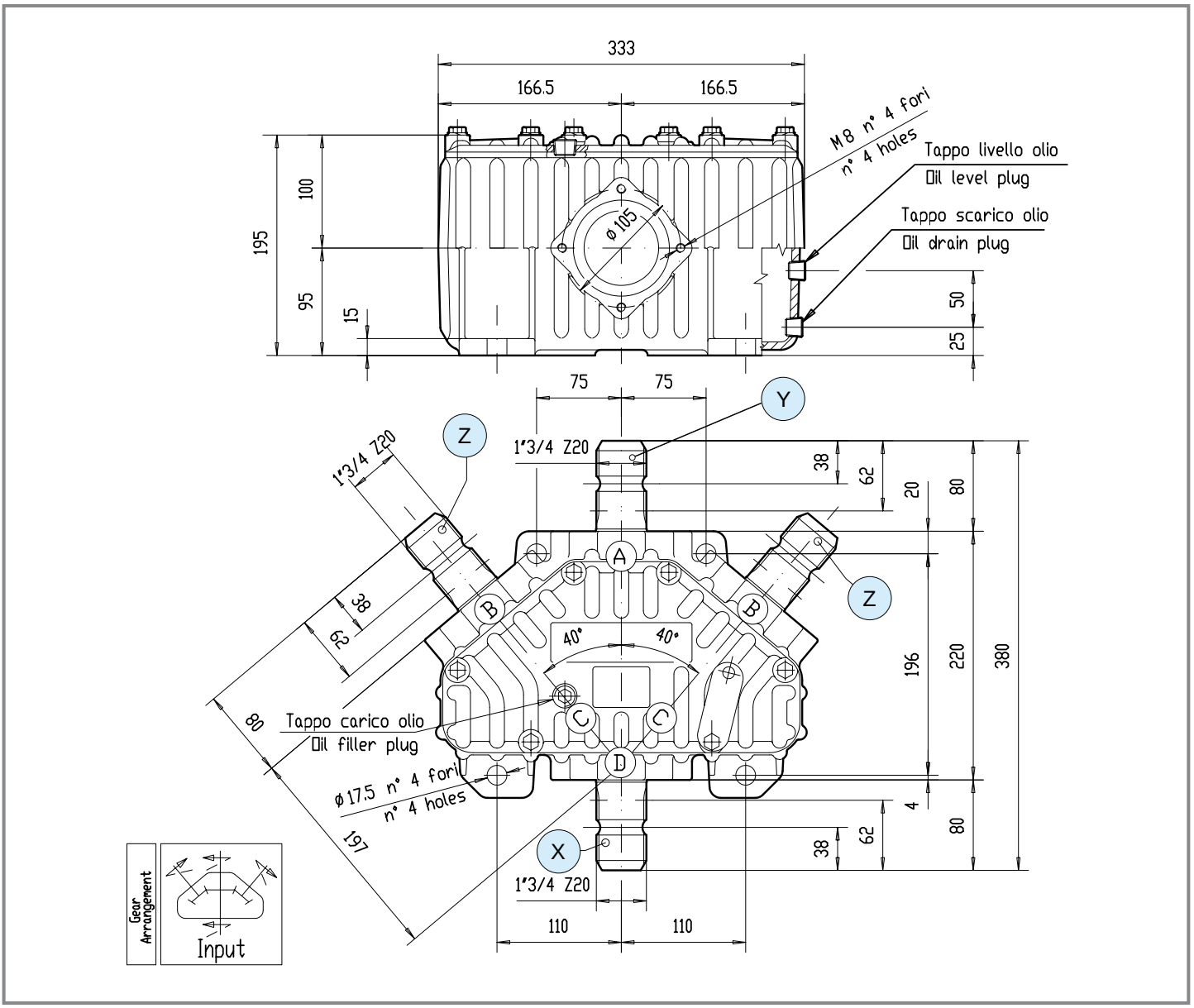

	i	N_1 [rpm]	P_1 [kW]	M_2 [Nm]	Shaft type X	Shaft type Y	Shaft type Z	Input	Option	Code	Mounting	
M	**1.35**	540	88	1118	6 1" 3/4 Z20	6 1" 3/4 Z20	6 1" 3/4 Z20	X	-	9.265.870	219	std
	1.20	540	93.1	1331	6 1" 3/4 Z20	6 1" 3/4 Z20	6 1" 3/4 Z20	X	-	9.265.801	219	std
R	**1.20**	1000	130	1445	6 1" 3/4 Z20	6 1" 3/4 Z20	6 1" 3/4 Z20	X	-	9.265.800	219	std
	1.35	1000	88	1100	6 1" 3/4 Z20	6 1" 3/4 Z20	6 1" 3/4 Z20	X	-	9.265.871	219	std

T-305J

Code **305.8**

(1.03)



[kg] 56 | [l] 2.3

Per configurazioni non a catalogo contattare Servizio Tecnico-Commerciale
For non-catalog configurations contact Technical-Commercial Service

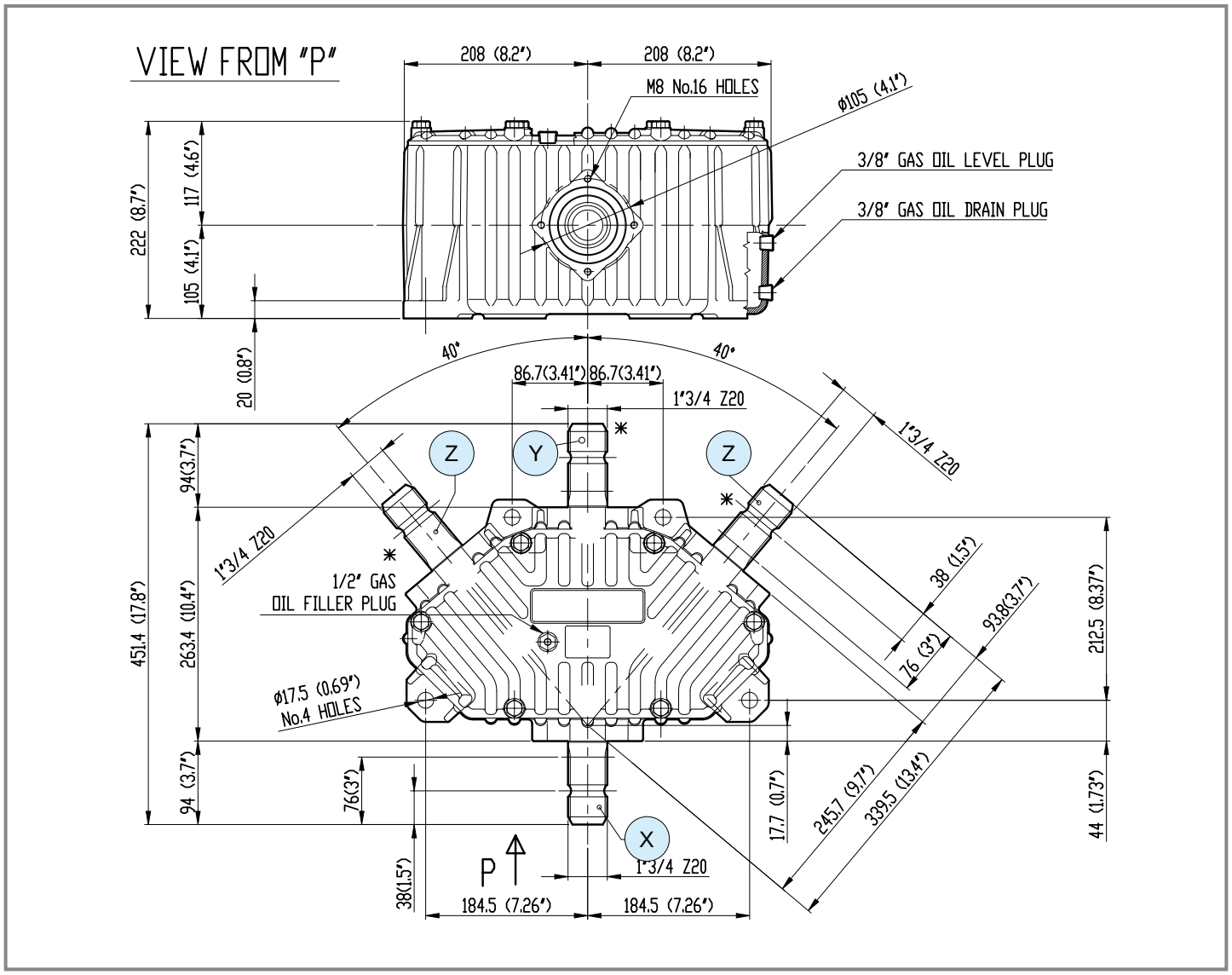

	i	N_1 [rpm]	P_1 [kW]	M_2 [Nm]	Shaft type X	Shaft type Y	Shaft type Z	Input	Option	Code	Mounting	
M	**1.35**	540	183.8	2335	6 1" 3/4 Z20	6 1" 3/4 Z20	6 1" 3/4 Z20	X	-	9.305.806	219	std
R	**1.20**	1000	183.8	2043	6 1" 3/4 Z20	6 1" 3/4 Z20	6 1" 3/4 Z20	X	-	9.305.815	219	std
	1.35	1000	183.8	2298	6 1" 3/4 Z20	6 1" 3/4 Z20	6 1" 3/4 Z20	X	-	9.305.801	219	std

comer industries

Questa pagina è lasciata intenzionalmente bianca
This page is intentionally left blank

Per configurazioni non a catalogo contattare Servizio Tecnico-Commerciale
For non-catalog configurations contact Technical-Commercial Service

	i	$P_{1\text{ - max}}$ [kW]	$M_{2\text{ - max}}$ [Nm]	Tipologia alberi disponibili *Available type of shafts*	p.
TB-19C	M 1.46 - 1.00 R 1.46	16.9	423	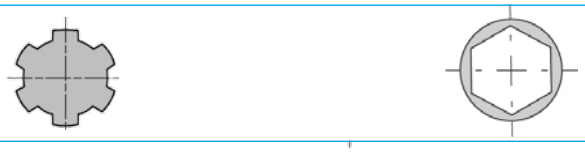	102
TB-27C	M - - 1.00 R 1.46	40.5	736	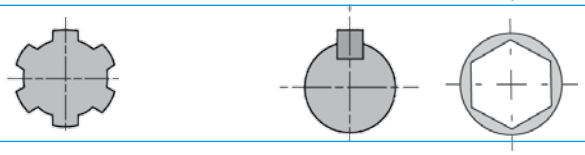	103
N-2A	M - - - R 5.67	23.5	-	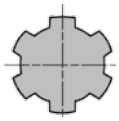	104

TB-19C

Code **259**

(1.04)

[kg] - [l] -

Per configurazioni non a catalogo contattare Servizio Tecnico-Commerciale
For non-catalog configurations contact Technical-Commercial Service

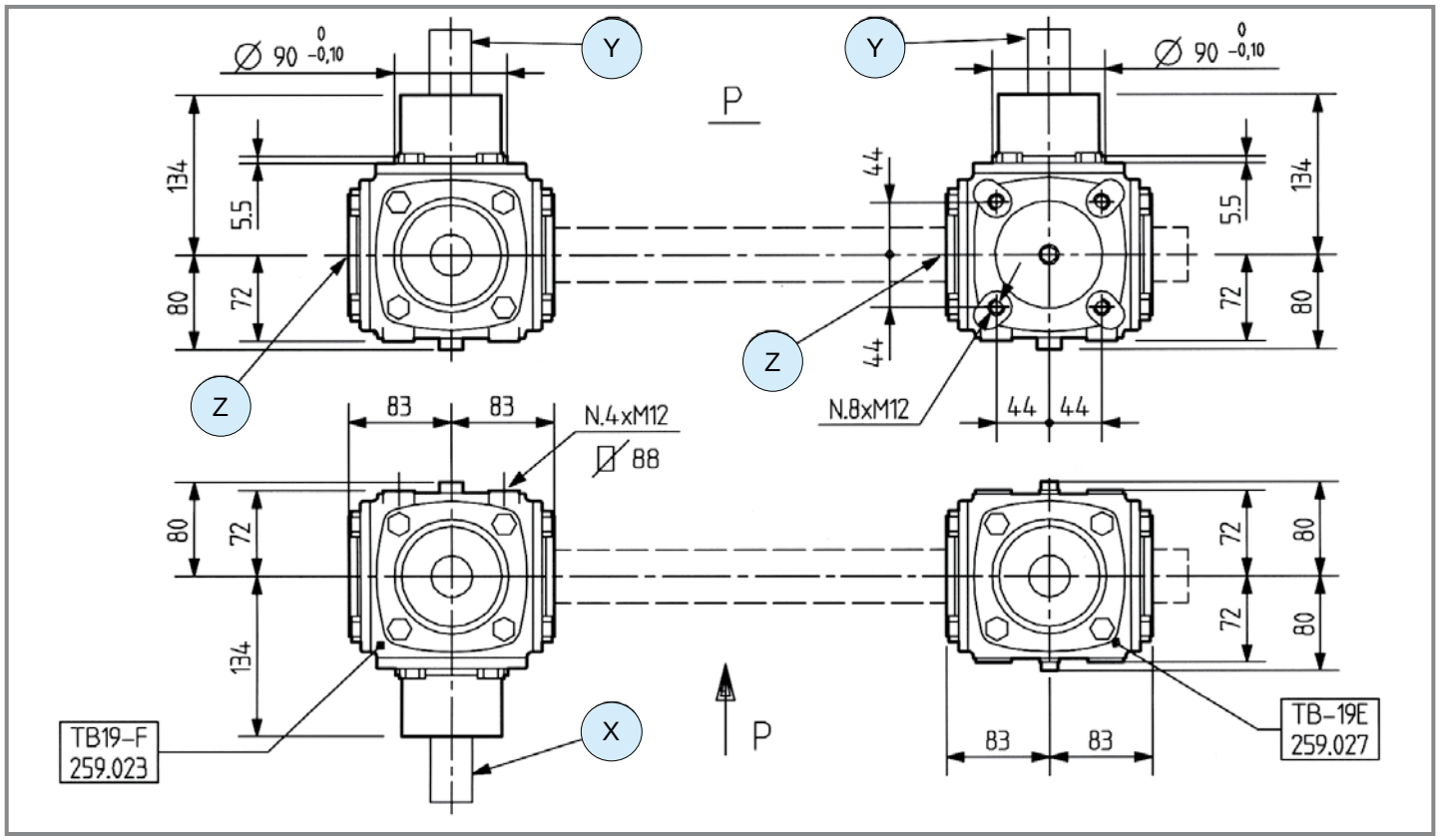

	i	N_1 [rpm]	P_1 [kW]	M_2 [Nm]	Shaft type X	Shaft type Y	Shaft type Z	Input	Option	Code	Mounting	
M	**1.46**	540	14.7	173	51 — 36	-	1 — 1" 3/8 Z6	X	-	9.259.027	27 28	std
-	**1**	540	16.9	290	51 — 36	1 — 1" 3/8 Z6	-	X	-	9.259.003	27 28	std
R	**1.46**	540	16.9	423	1 — 1" 3/8 Z6	1 — 1" 3/8 Z6	51 — 36	X	-	9.259.023	17 view from A	std

comer industries

TB-27C

Code **267**

(1.04)

[kg] - [l] -

Per configurazioni non a catalogo contattare Servizio Tecnico-Commerciale
For non-catalog configurations contact Technical-Commercial Service

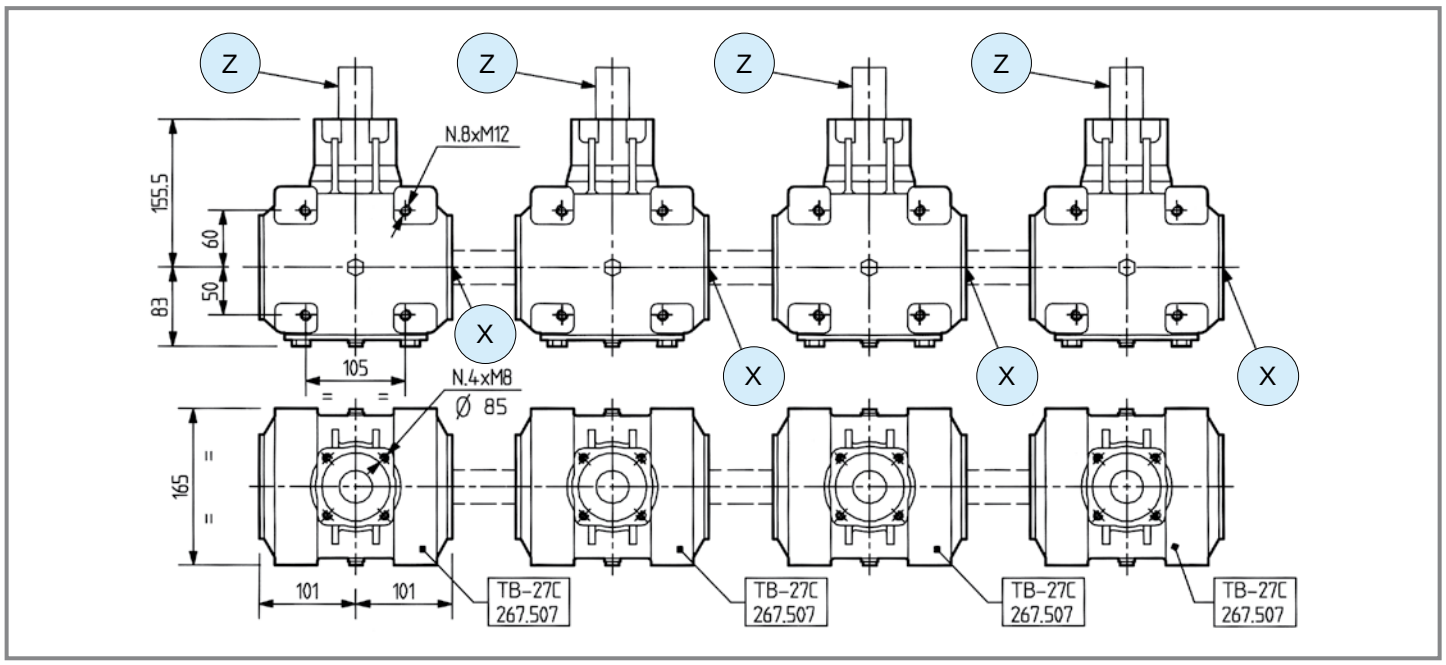

	i	N_1 [rpm]	P_1 [kW]	M_2 [Nm]	Shaft type X	Shaft type Y	Shaft type Z	Input	Option	Code	Mounting	
-	**1.00**	540	40.5	537	51 	-	1 	Z	-	9.267.507	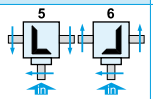	std
R	**1.46**	540	29.4	736	51 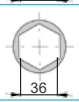	-	1 	Z	-	9.267.538	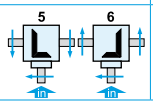	std

N-2A

Code **699**

(1.04)

[kg] 19 | [l] 1.4

Per configurazioni non a catalogo contattare Servizio Tecnico-Commerciale
For non-catalog configurations contact Technical-Commercial Service

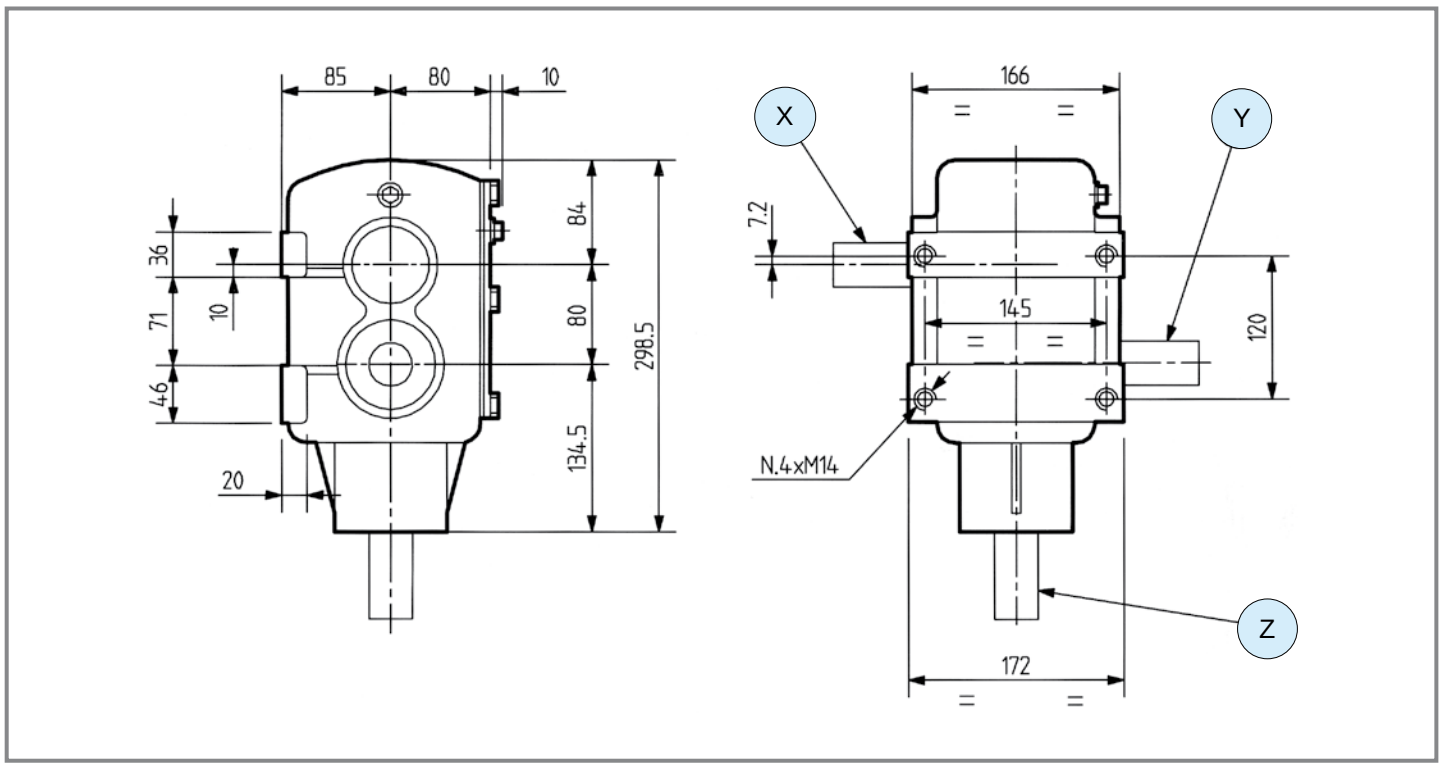

	i	N_1 [rpm]	P_1 [kW]	M_2 [Nm]	Shaft type X	Shaft type Y	Shaft type Z	Input	Option	Code	Mounting	
R	**5.67**	540	23.5	-	1 1" 3/8 Z6	1 1" 3/8 Z6	1 1" 3/8 Z6	Z	-	9.699.000	91	std

comer industries

Questa pagina è lasciata intenzionalmente bianca
This page is intentionally left blank



Per configurazioni non a catalogo contattare Servizio Tecnico-Commerciale
For non-catalog configurations contact Technical-Commercial Service

	i	$P_{1\text{ - max}}$ [kW]	$M_{2\text{ - max}}$ [Nm]	Tipologia alberi disponibili *Available type of shafts*	p.
A-649A	M 3÷4.23 - - R -	44	265	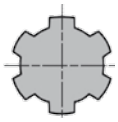 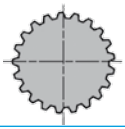	108
A-640A	M 3.82 - - R -	55.9	252	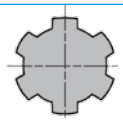 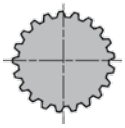	109

A-649A

Code **649**

(1.05)



[kg] 25 | [l] -

Per configurazioni non a catalogo contattare Servizio Tecnico-Commerciale
For non-catalog configurations contact Technical-Commercial Service

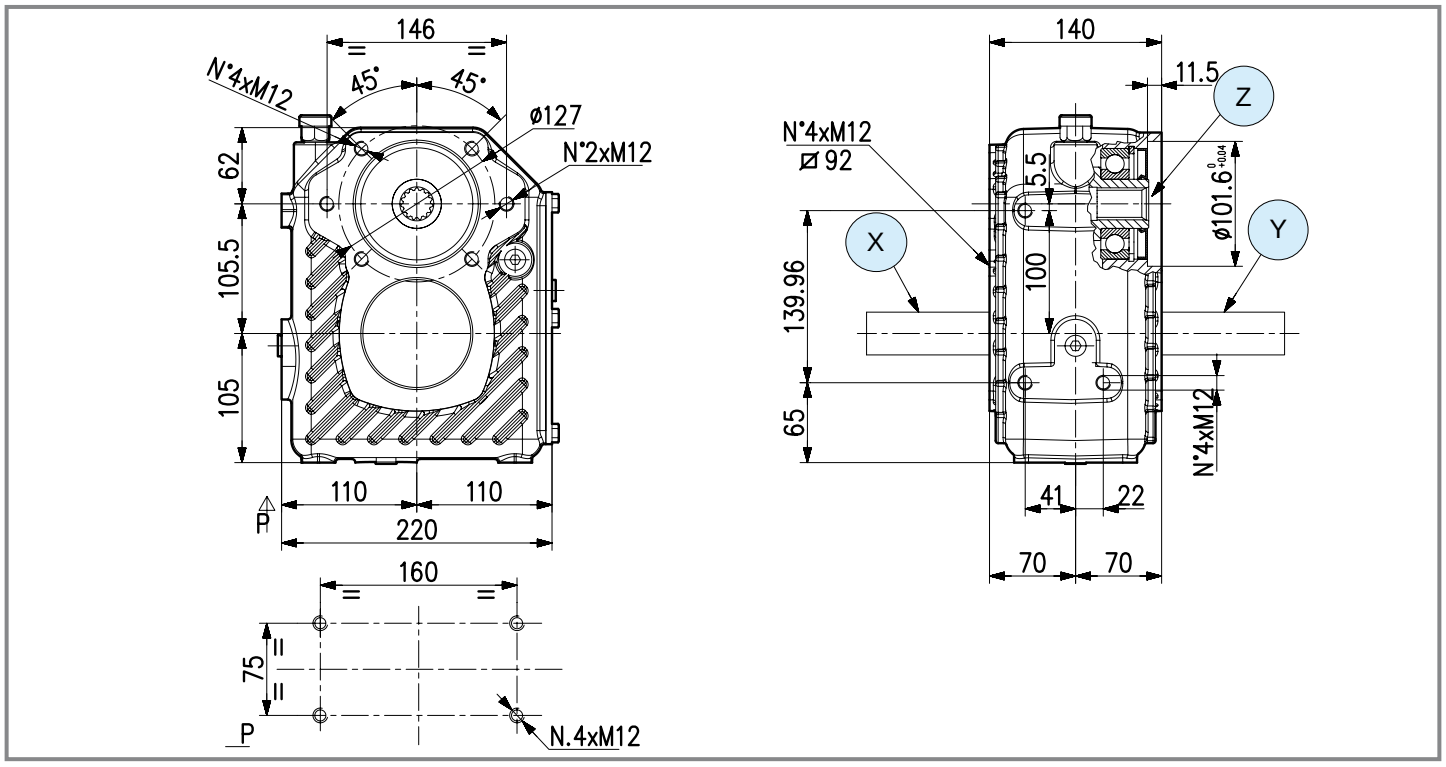

	i	N_1 [rpm]	P_1 [kW]	M_2 [Nm]	Shaft type X	Shaft type Y	Shaft type Z	Input	Flange	Code	Mounting	
M	**4.23**	540	40.4	172	1 — 1" 3/8 Z6	-	61 — 16/32" DP Z13	X	SAE-A/GR3	9.649.014	41 42	std
	4.23	540	40.4	172	1 — 1" 3/8 Z6	60 — 16/32" DP Z9	62 — 16/32" DP Z15	X	SAE-B	9.649.010	41 42	std
	3	540	44	265	1 — 1" 3/8 Z6	-	62 — 16/32" DP Z15	X	SAE-B	9.649.025	41 42	std
	3	540	44	265	1 — 1" 3/8 Z6	-	61 — 16/32" DP Z13	X	SAE-B	9.649.005	41 42	std

A-640A

Code **640**

(1.05)



[kg] 42.5 | [l] -

Per configurazioni non a catalogo contattare Servizio Tecnico-Commerciale
For non-catalog configurations contact Technical-Commercial Service

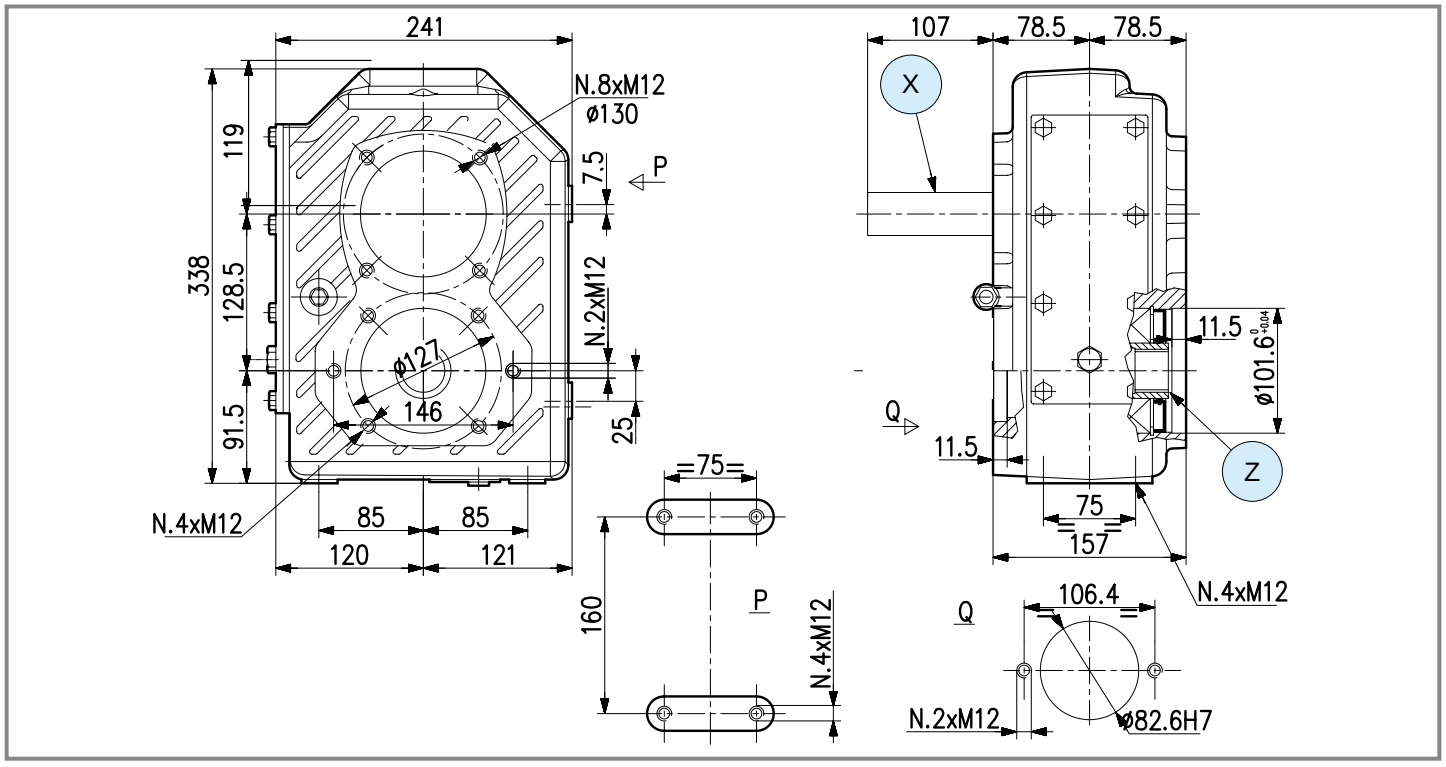

	i	N_1 [rpm]	P_1 [kW]	M_2 [Nm]	Shaft type X	Shaft type Y	Shaft type Z	Input	Flange	Code	Mounting	
M	**3.82**	540	55.9	252	1 — 1" 3/8 Z6	-	63 — 16/32" DP Z13	X	SAE-B	9.640.000	41 42	std

ZAPPATRICI. FRESATRICI ED ERPICI ROTANTI
ROTARY TILLERS AND ROTARY HARROWS

(2.01) (2.02) (2.03)

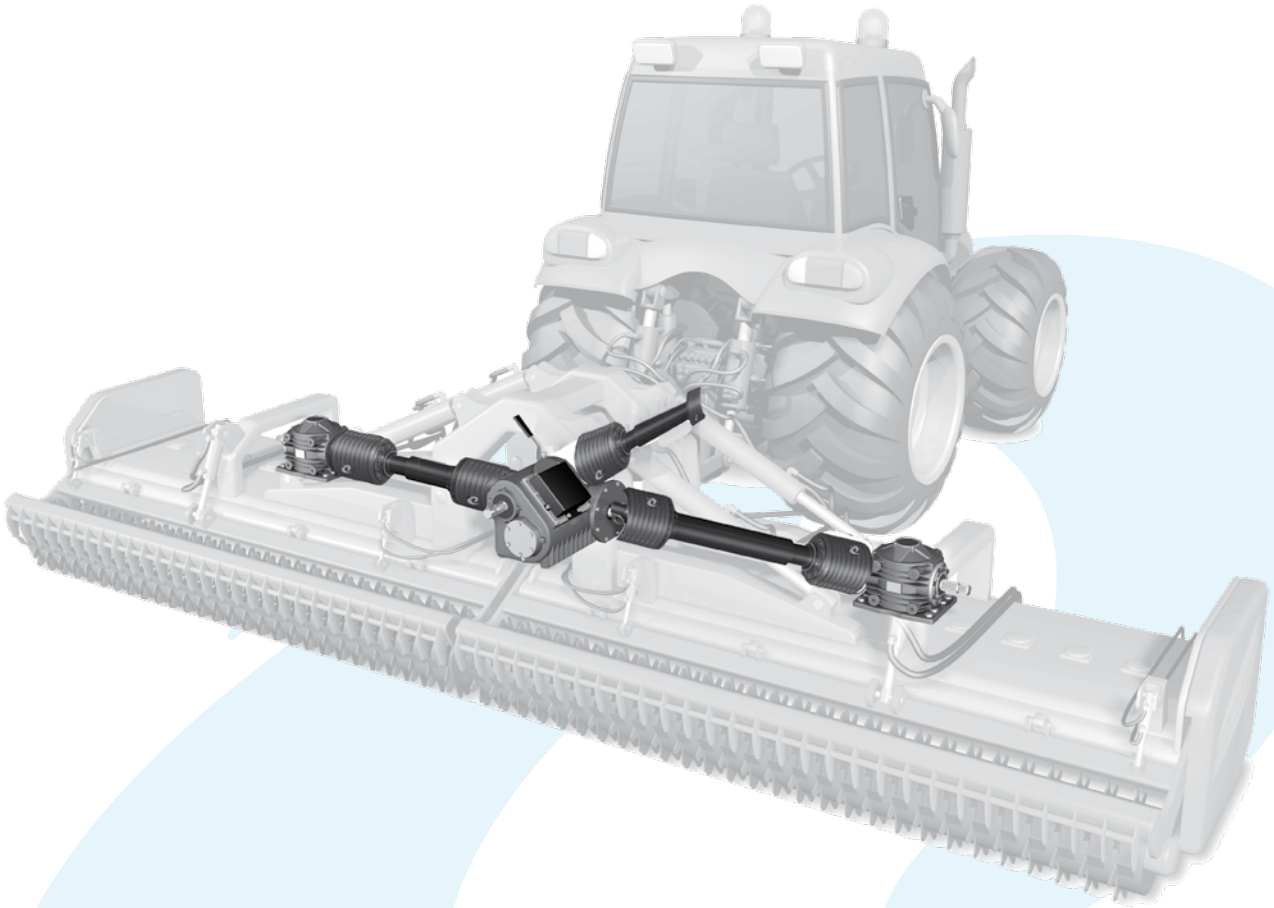

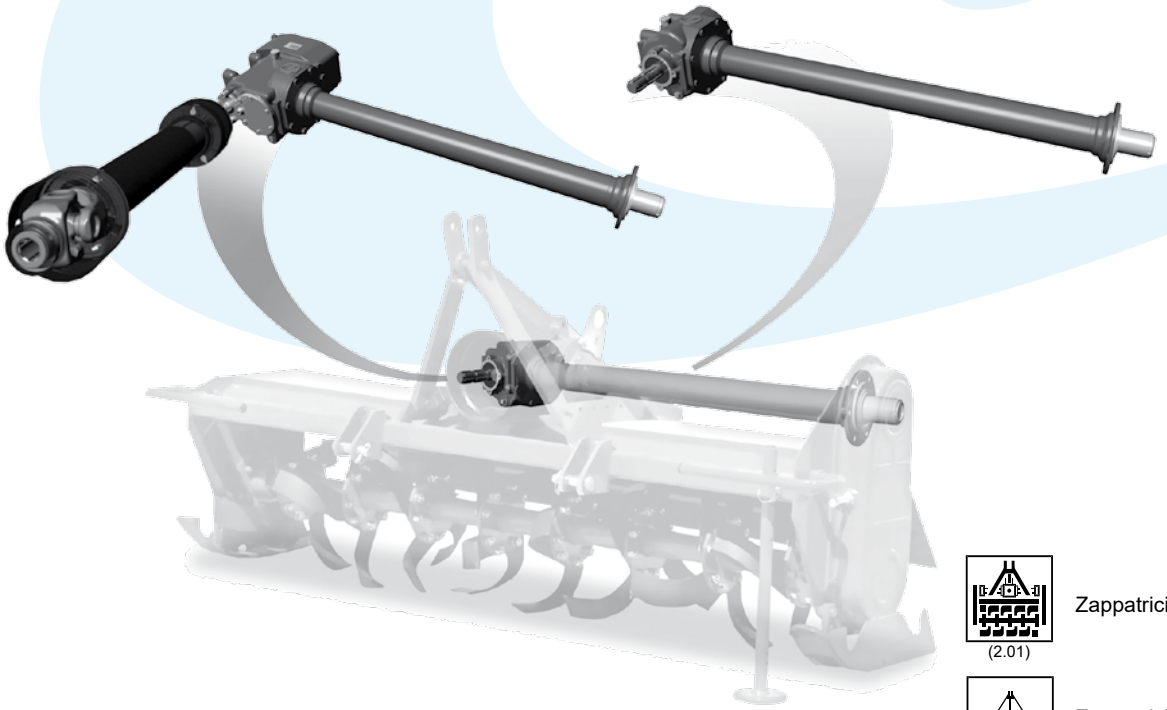

(2.01) Zappatrici - fresatrici / Rotary Tillers

(2.02) Zappatrici multiple / *Multiple Rotary Tillers*

(2.03) Erpici rotanti / *Rotary Harrows*

Per configurazioni non a catalogo contattare Servizio Tecnico-Commerciale
For non-catalog configurations contact Technical-Commercial Service

	i	$P_{1\text{ - max}}$ [kW]	$M_{2\text{ - max}}$ [Nm]	Tipologia alberi disponibili *Available type of shafts*	p.
TB-281J	M - - - R 1.46	16.9	423	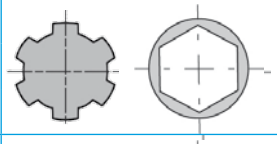	114
TB-19C	M - - - R 1.46	16.9	423	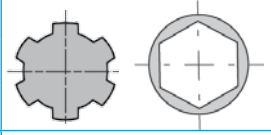	115
TB-27J **TB-27C**	M - - 1.00 R 1.46÷1.90	40.5	736	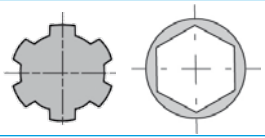	116
TB-278C	M - - 1.00 R 1.60÷1.92	40.5	1090	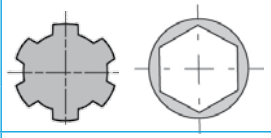	117
TB-22C	M - - - R 1.60÷2.43	66.2	1999	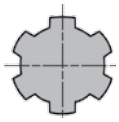	118
TLZ-21J	M - - - R 1.46	29.4	736		119
TLZ-292A	M - - - R 1.86	47.8	1525		120
MZ-1A	M - - - R 1.55÷2.37	29.4	-	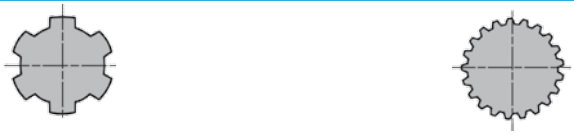	121
MZ-2A	M - - - R 1.62÷2.64	51.5	-	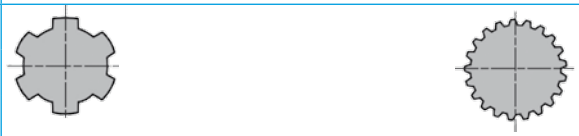	122
MZ-3A	M - - - R 1.62÷2.64	80.9	-	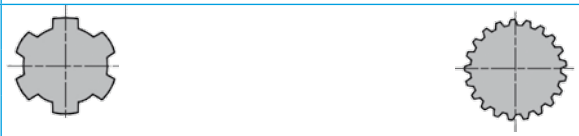	123
DZ-811F	M - - - R 2.21÷2.73	51.5	-		124
MZ-812F	M - - - R 1.34÷3.19	51.5	-	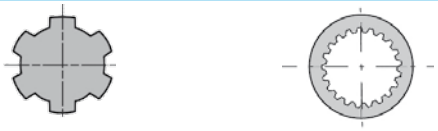	125
DZ-816F	M - - - R 1.84÷2.48	70	-		126

	i	$P_{1\text{ - max}}$ [kW]	$M_{2\text{ - max}}$ [Nm]	Tipologia alberi disponibili *Available type of shafts*	p.
MZ-817F	M - - - R 1.80÷12.39	70	-		127
DZ-821F	M - - - R 2.44÷4.19	96	-		128
MZ-822F	M - - - R 1.34÷3.19	96	-		129
MZ-827F	M - - - R 1.16÷2.95	147	-		130
LTV-14F	M - - - R 1.92	29.5	965		131
TV-274A	M - - - R 1.93	58.9	1947	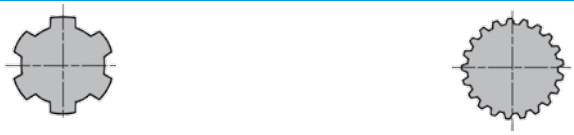	132
TV-301H	M - - - R 2.42	73.5	1947		133
DV-813F	M - - - R 1.34÷3.19	51.5	-		134
MV-814F	M - - - R 1.62÷2.65	51.5	-		135
MV-817F	M - - - R 1.15÷3.73	70	-		136
DV-818F	M - - - R 2.30÷3.08	70	-		137
MV-819F	M - - - R 2.44÷3.67	96	-		138
DV-823F	M - - - R 2.44÷4.20	96	-	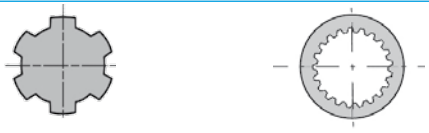	139

	i	$P_{1\text{ - max}}$ [kW]	$M_{2\text{ - max}}$ [Nm]	Tipologia alberi disponibili *Available type of shafts*	p.
MV-824F	M - - - R 1.34÷3.20	96	-		140
DV-733F	M - - - R 2.56÷2.98	132	-		141
MV-826F	M - - - R 1.32÷3.35	147	-		142
D-825A	M - - - R 1.07÷1.80	290	-	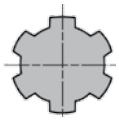	143

TB-281J

Code **281.8**

(2.02)

[kg] 7.5 | [l] 0.5

Per configurazioni non a catalogo contattare Servizio Tecnico-Commerciale
For non-catalog configurations contact Technical-Commercial Service

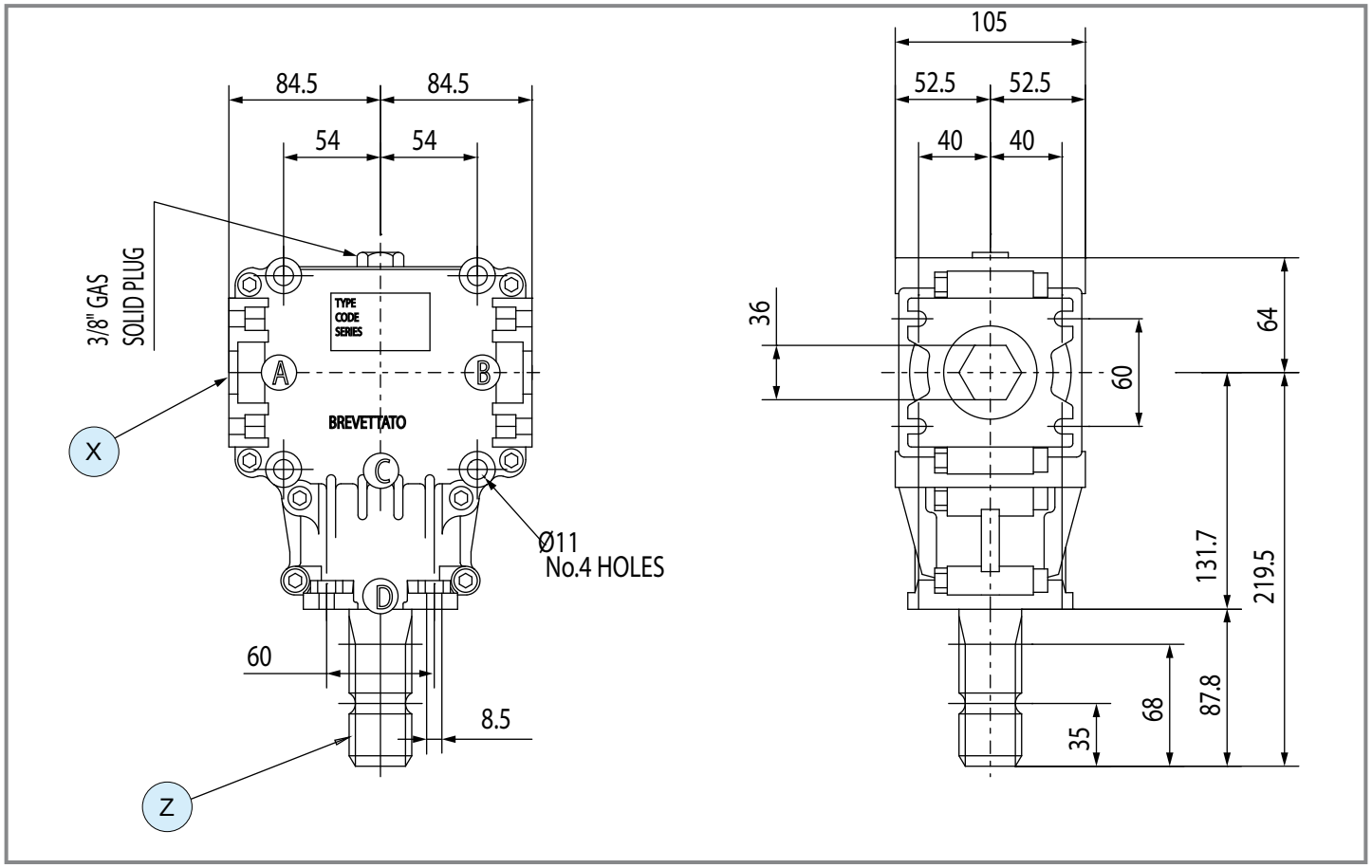

	i	N_1 [rpm]	P_1 [kW]	M_2 [Nm]	Shaft type X	Shaft type Y	Shaft type Z	Input	Leght	Code	Mounting	
R	**1.46**	540	16.9	423	36 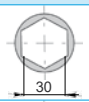	-	1 	Z	-	9.281.837	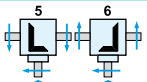	std
	1.46	540	16.9	423	37 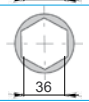	-	1 	Z	-	9.281.864	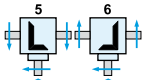	std

comer industries

TB-19C

Code **259**

(2.02)

[kg] 15 | [l] 1

Per configurazioni non a catalogo contattare Servizio Tecnico-Commerciale
For non-catalog configurations contact Technical-Commercial Service

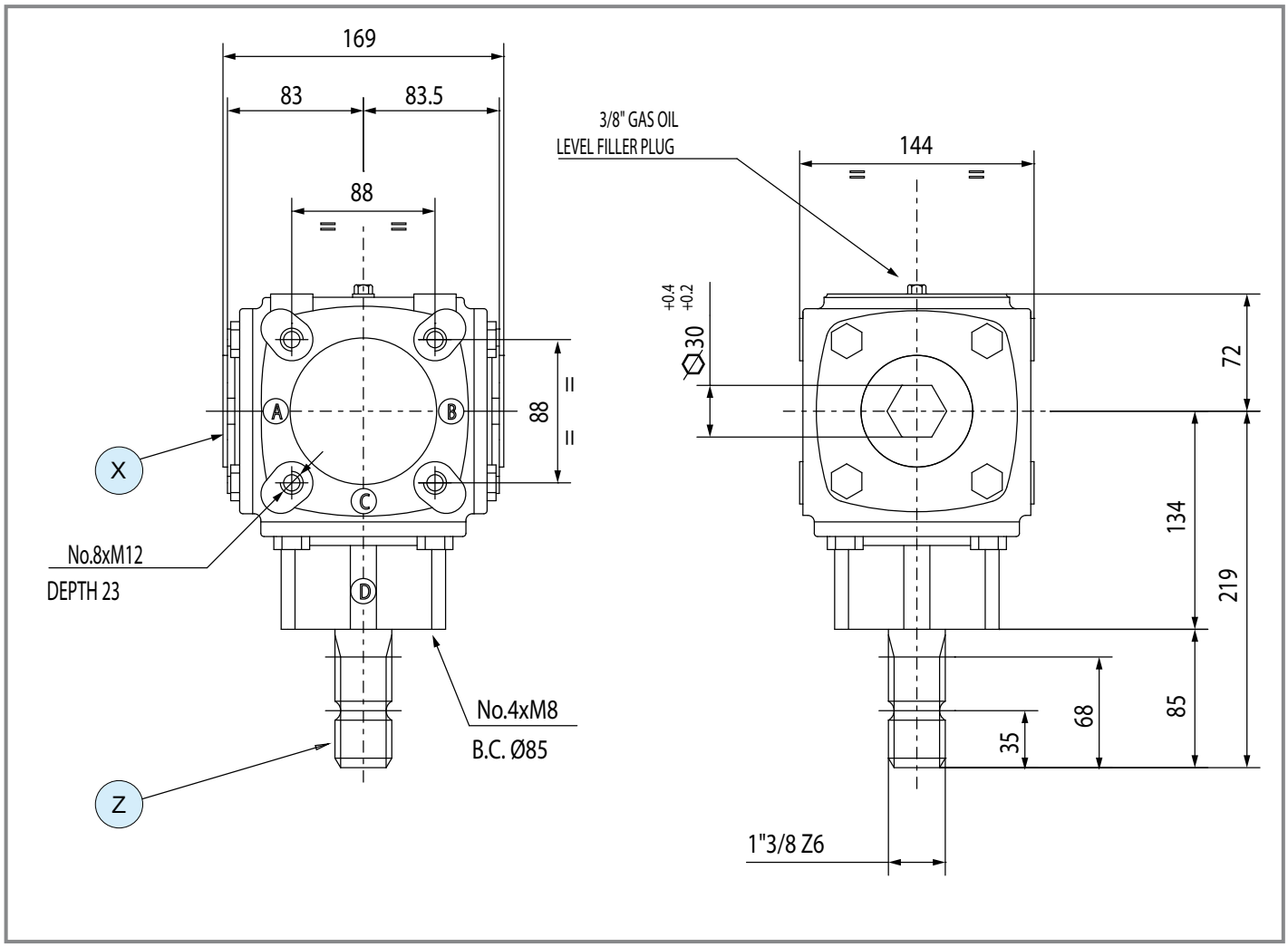

	i	N_1 [rpm]	P_1 [kW]	M_2 [Nm]	Shaft type X	Y	Z	Input	Leght	Code	Mounting	
R	**1.46**	540	16.9	423	36	-	1	Z	-	9.259.870	5 6	std
	1.46	540	16.9	423	37	-	1	Z	-	9.259.871	5 6	std

TB-27J
Code **267.8**

TB-27C
Code **267**

(2.02)

[kg] 22 | [l] 1.1

Per configurazioni non a catalogo contattare Servizio Tecnico-Commerciale
For non-catalog configurations contact Technical-Commercial Service

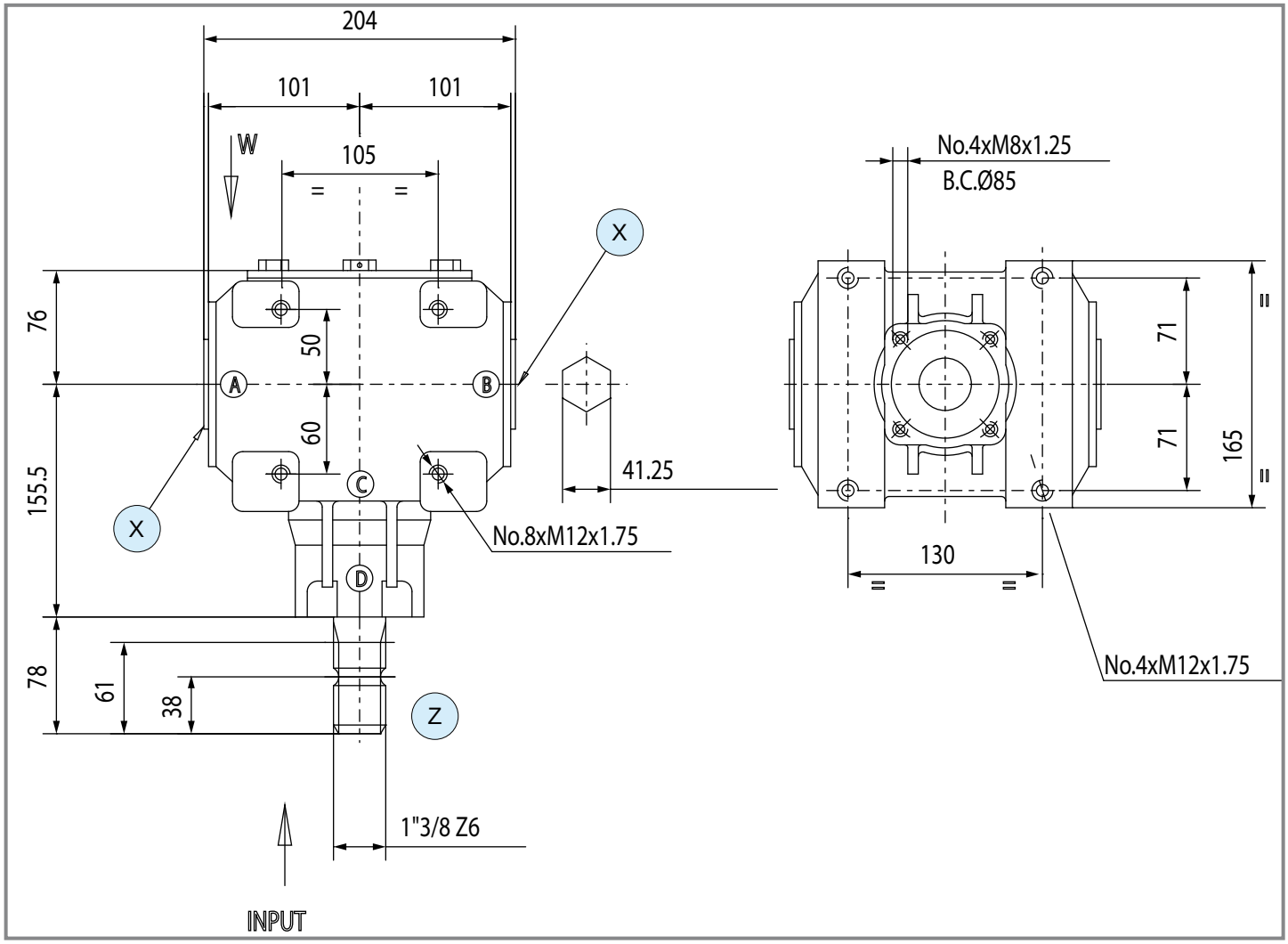

	i	N_1 [rpm]	P_1 [kW]	M_2 [Nm]	Shaft type X	Y	Z	Input	Leght	Code	Mounting	
-	**1.00**	540	40.5	695	37 — 36	-	1 — 1" 3/8 Z6	Z	-	9.267.507	5 6	std
R	**1.46**	540	29.4	736	38 — 41	-	1 — 1" 3/8 Z6	Z	-	9.267.872	5 6	std
	1.90	540	22.1	720	38 — 41	-	1 — 1" 3/8 Z6	Z	-	9.267.004	5 6	std

comer industries

TB-278C

Code **278**

(2.02)

[kg] 24 | [l] 1.6

Per configurazioni non a catalogo contattare Servizio Tecnico-Commerciale
For non-catalog configurations contact Technical-Commercial Service

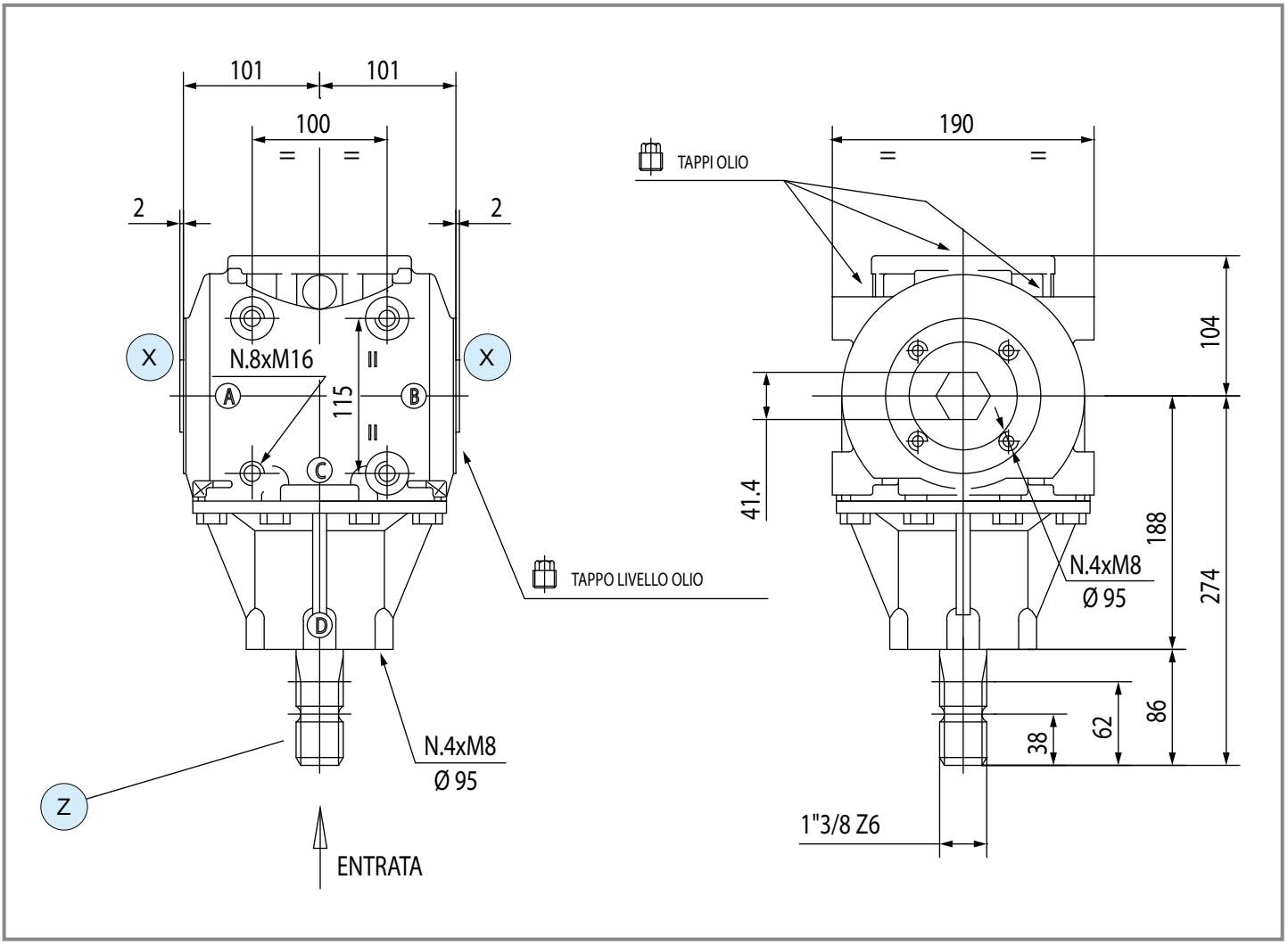

	i	N_1 [rpm]	P_1 [kW]	M_2 [Nm]	Shaft type X	Y	Z	Input	Leght	Code	Mounting	
-	**1.00**	540	40.5	695	38 – 41	-	1 – 1" 3/8 Z6	Z	-	9.278.524	5 6	std
R	**1.60**	540	36.8	1010	37 – 36	-	1 – 1" 3/8 Z6	Z	-	9.278.018	5 6	std
	1.60	540	36.8	1010	38 – 41	-	1 – 1" 3/8 Z6	Z	-	9.278.019	5 6	std
	1.92	540	33.1	1090	37 – 36	-	1 – 1" 3/8 Z6	Z	-	9.278.020	5 6	std
	1.92	540	33.1	1090	38 – 41	-	1 – 1" 3/8 Z6	Z	-	9.278.021	5 6	std

TB-22C

Code **262**

(2.02)

[kg] 30 | [l] 2.5

Per configurazioni non a catalogo contattare Servizio Tecnico-Commerciale
For non-catalog configurations contact Technical-Commercial Service

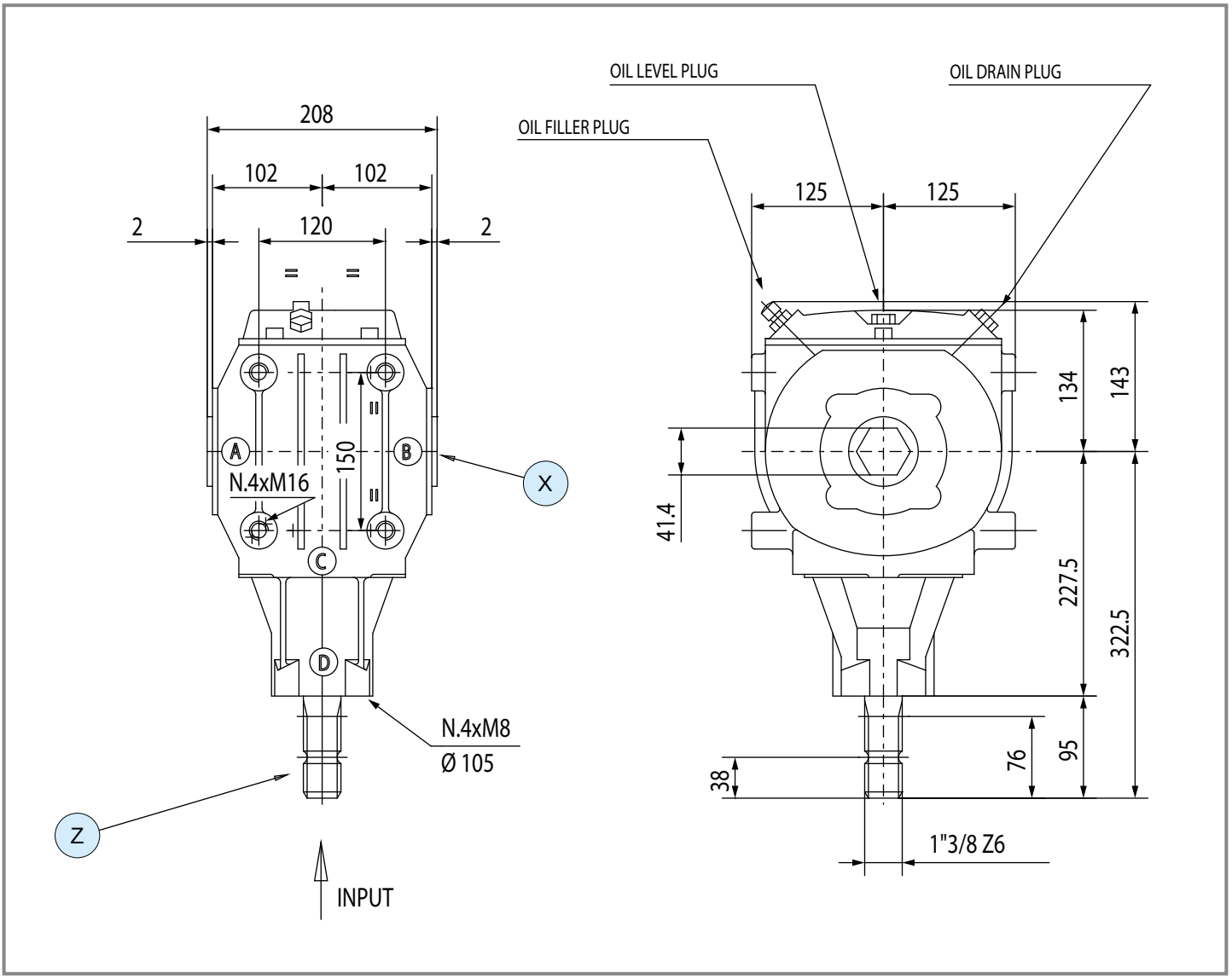

	i	N_1 [rpm]	P_1 [kW]	M_2 [Nm]	Shaft type X	Shaft type Y	Shaft type Z	Input	Leght	Code	Mounting	
R	**1.60**	540	66.2	1817	38 — 41	-	1 — 1" 3/8 Z6	Z	-	9.262.504	5 6	std
R	**1.93**	540	60.4	1999	39 — 50	-	1 — 1" 3/8 Z6	Z	-	9.262.013	5 6	std
R	**1.93**	540	60.4	1999	38 — 41	-	1 — 1" 3/8 Z6	Z	-	9.262.015	5 6	std
R	**2.43**	540	39.7	1655	39 — 50		1 — 1" 3/8 Z6	Z	-	9.262.012	5 6	std

comer industries

TLZ-21J

Code **261.8**

(2.01)



[kg] 23 | [l] -

Per configurazioni non a catalogo contattare Servizio Tecnico-Commerciale
For non-catalog configurations contact Technical-Commercial Service

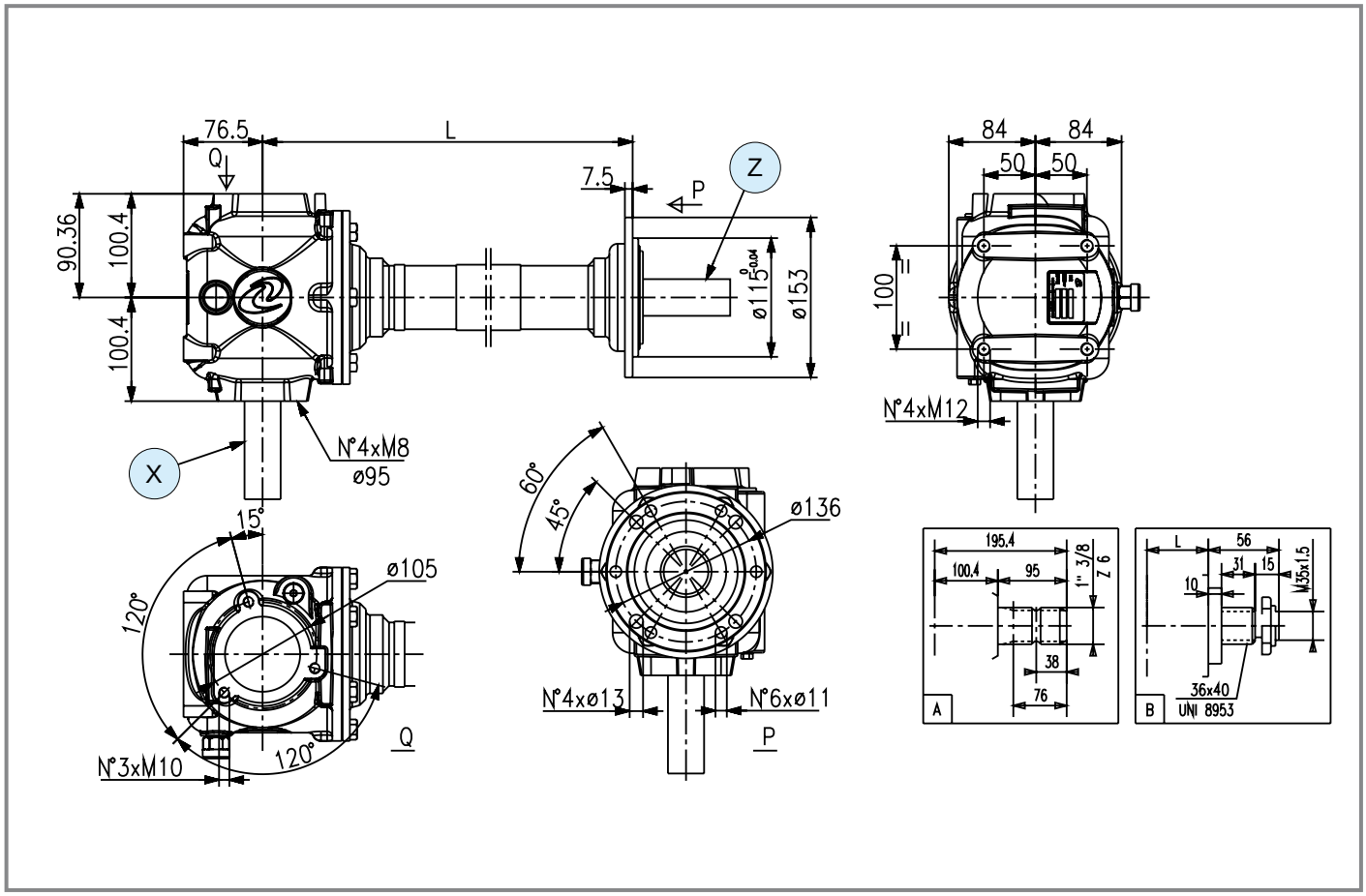

	i	N_1 [rpm]	P_1 [kW]	M_2 [Nm]	Shaft type X	Shaft type Y	Shaft type Z	Input	Leght	Code	Mounting	
R	**1.46**	540	29.4	736	1 1" 3/8 Z6	-	7 36x40 DIN5482	X	400	9.261.819	7	std
	1.46	540	29.4	736	1 1" 3/8 Z6	-	7 36x40 DIN5482	X	500	9.261.811	7	std
	1.46	540	29.4	736	1 1" 3/8 Z6	-	7 36x40 DIN5482	X	600	9.261.812	7	std
	1.46	540	29.4	736	1 1" 3/8 Z6	-	7 36x40 DIN5482	X	700	9.261.813	7	std
	1.46	540	29.4	736	1 1" 3/8 Z6	-	7 36x40 DIN5482	X	800	9.261.814	7	std
	1.46	540	29.4	736	1 1" 3/8 Z6	-	7 36x40 DIN5482	X	900	9.261.810	7	std

TLZ-292A

Code **292**

(2.01)

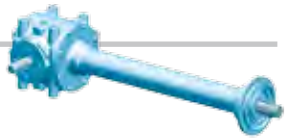

[kg] 49.5 | [l] -

Per configurazioni non a catalogo contattare Servizio Tecnico-Commerciale
For non-catalog configurations contact Technical-Commercial Service

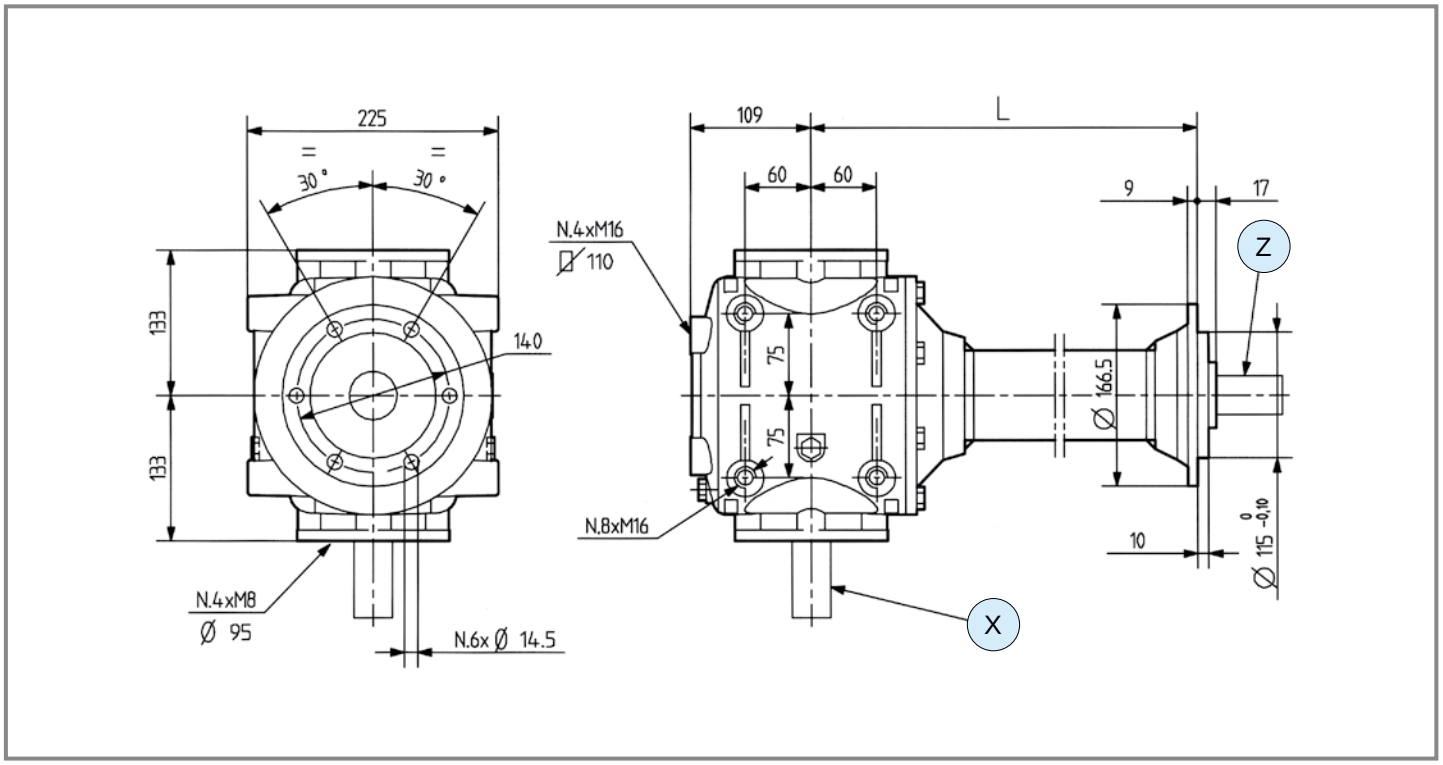

	i	N_1 [rpm]	P_1 [kW]	M_2 [Nm]	Shaft type X	Shaft type Y	Shaft type Z	Input	Leght	Code	Mounting	
R	**1.86**	540	47.8	1525	1 1" 3/8 Z6	-	30 42x48 DIN5482	X	700	9.292.013	7 8	std
	1.86	540	47.8	1525	1 1" 3/8 Z6	-	30 42x48 DIN5482	X	800	9.292.008	7 8	std
	1.86	540	47.8	1525	1 1" 3/8 Z6	-	30 42x48 DIN5482	X	900	9.292.009	7 8	std
	1.86	540	47.8	1525	1 1" 3/8 Z6	-	30 42x48 DIN5482	X	1000	9.292.010	7 8	std
	1.86	540	47.8	1525	1 1" 3/8 Z6	-	30 42x48 DIN5482	X	1050	9.292.318	7 8	std
	1.86	540	47.8	1525	1 1" 3/8 Z6	-	30 42x48 DIN5482	X	1100	9.292.011	7 8	std
	1.86	540	47.8	1525	1 1" 3/8 Z6	-	30 42x48 DIN5482	X	1150	9.292.319	7 8	std

comer industries

MZ-1A

Code **701**

(2.01)

[kg] 39.3 | [l] 2.5

Per configurazioni non a catalogo contattare Servizio Tecnico-Commerciale
For non-catalog configurations contact Technical-Commercial Service

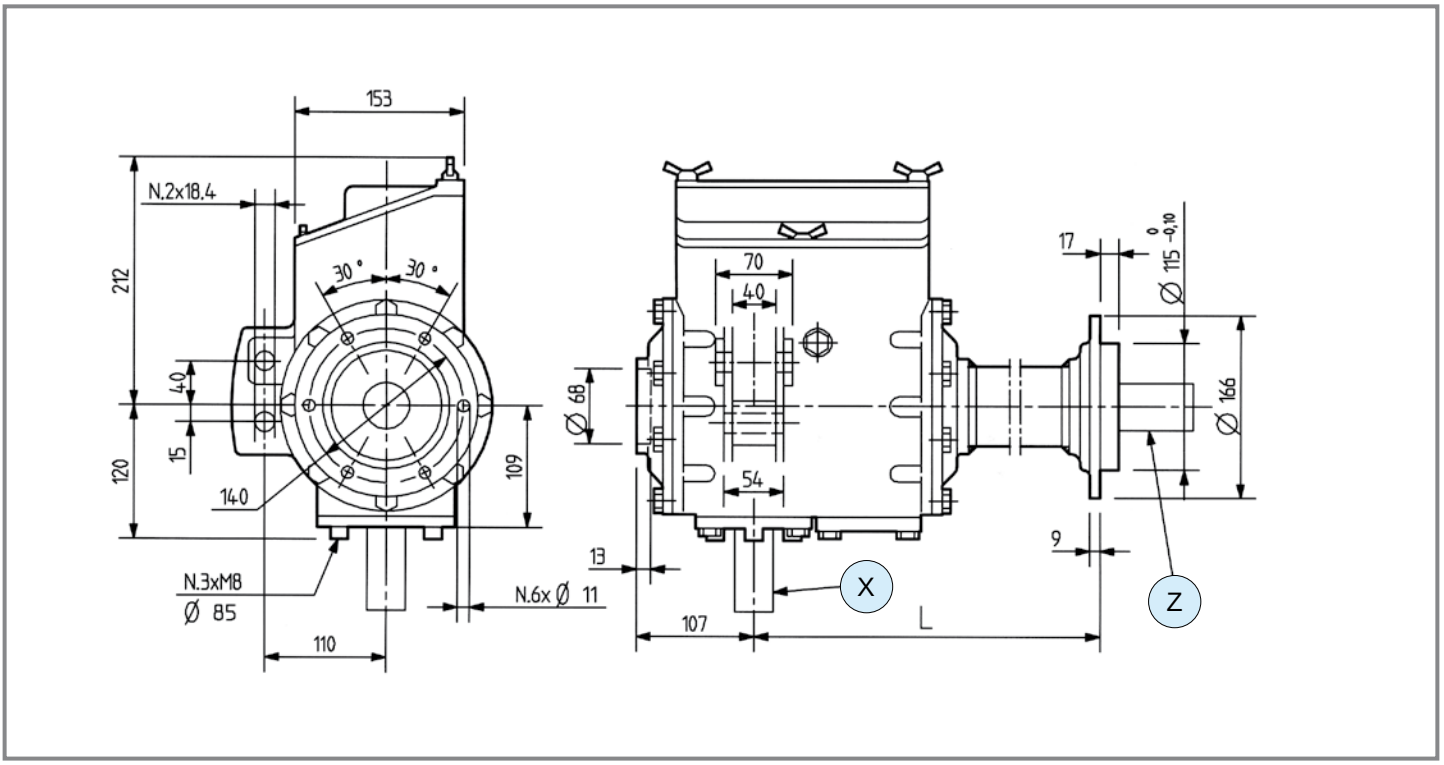

	i	N_1 [rpm]	P_1 [kW]	M_2 [Nm]	Shaft type X	Shaft type Y	Shaft type Z	Input	Leght	Code	Mounting	
R	1.55 1.72 2.14 2.37	540	29.4	-	1 — 1" 3/8 Z6	-	31 — 36x42 DIN5482	X	600	9.701.028	38	std
R	1.55 1.72 2.14 2.37	540	29.4	-	1 — 1" 3/8 Z6	-	31 — 36x42 DIN5482	X	700	9.701.000	38	std
R	1.55 1.72 2.14 2.37	540	29.4	-	1 — 1" 3/8 Z6	-	31 — 36x42 DIN5482	X	800	9.701.030	38	std
R	1.55 1.72 2.14 2.37	540	29.4	-	1 — 1" 3/8 Z6	-	31 — 36x42 DIN5482	X	900	9.701.026	38	std

MZ-2A

Code **702**

(2.01)

[kg] 85 | [l] -

Per configurazioni non a catalogo contattare Servizio Tecnico-Commerciale
For non-catalog configurations contact Technical-Commercial Service

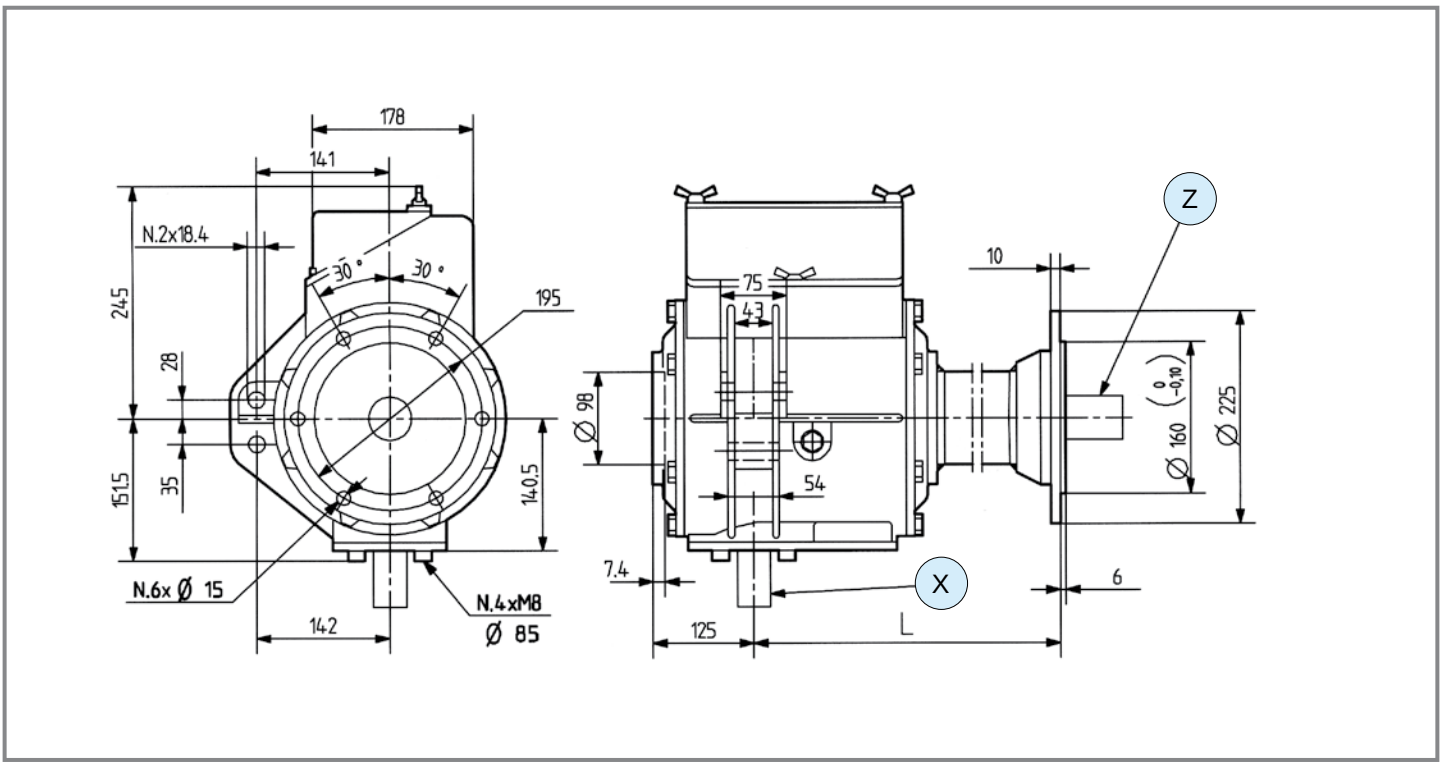

	i	N_1 [rpm]	P_1 [kW]	M_2 [Nm]	Shaft type X	Shaft type Y	Shaft type Z	Input	Leght	Code	Mounting	
R	1.62 1.87 2.29 2.64	540	51.5	-	1 — 1" 3/8 Z6	-	32 — 46x54 DIN5482	X	800	9.702.048	38	std
R	1.62 1.87 2.29 2.64	540	51.5	-	1 — 1" 3/8 Z6	-	32 — 46x54 DIN5482	X	900	9.702.001	38	std
R	1.62 1.87 2.29 2.64	540	51.5	-	1 — 1" 3/8 Z6	-	32 — 46x54 DIN5482	X	1000	9.702.049	38	std
R	1.62 1.87 2.29 2.64	540	51.5	-	1 — 1" 3/8 Z6	-	32 — 46x54 DIN5482	X	1100	9.702.051	38	std

MZ-3A

Code **703**

(2.01)

[kg] 122 | [l] -

Per configurazioni non a catalogo contattare Servizio Tecnico-Commerciale
For non-catalog configurations contact Technical-Commercial Service

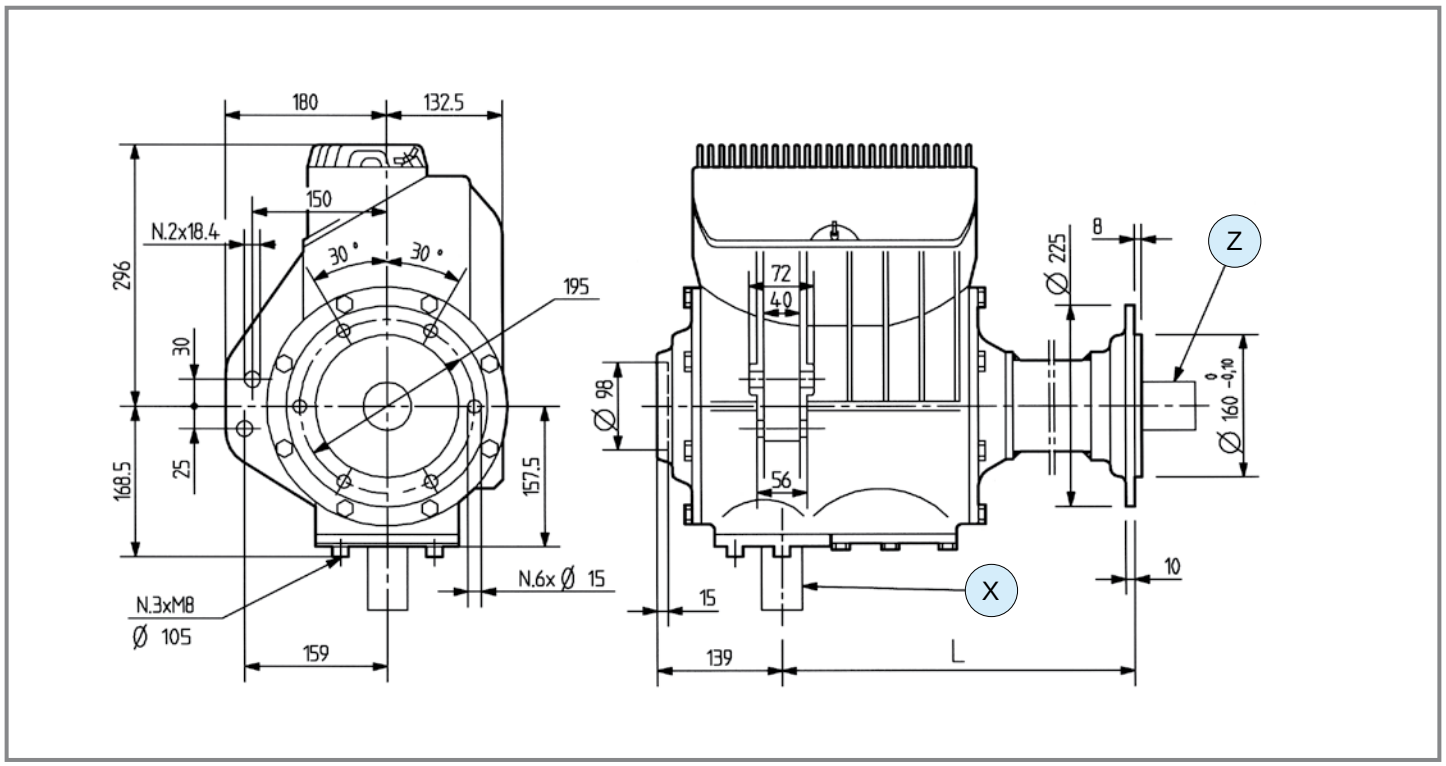

	i	N_1 [rpm]	P_1 [kW]	M_2 [Nm]	Shaft type X	Shaft type Y	Shaft type Z	Input	Leght	Code	Mounting	
R	1.40 1.56 2.96 3.30	1000	80.9	-	5 1" 3/4 Z6	-	32 46x54 DIN5482	X	1250	9.703.039	38	std
R	1.56 1.74 2.66 2.96	540	80.9	-	5 1" 3/4 Z6	-	32 46x54 DIN5482	X	1150	9.703.042	38	std
R	1.56 1.74 2.66 2.96	540	80.9	-	5 1" 3/4 Z6	-	32 46x54 DIN5482	X	1250	9.703.044	38	std
R	1.56 1.74 2.66 2.96	540	80.9	-	5 1" 3/4 Z6	-	32 46x54 DIN5482	X	1350	9.703.047	38	std
R	1.56 1.74 2.66 2.96	540	80.9	-	5 1" 3/4 Z6	-	32 46x54 DIN5482	X	1500	9.703.048	38	std

DZ-811F

Code **811**

(2.01)

[kg] 22.8 | [l] -

Per configurazioni non a catalogo contattare Servizio Tecnico-Commerciale
For non-catalog configurations contact Technical-Commercial Service

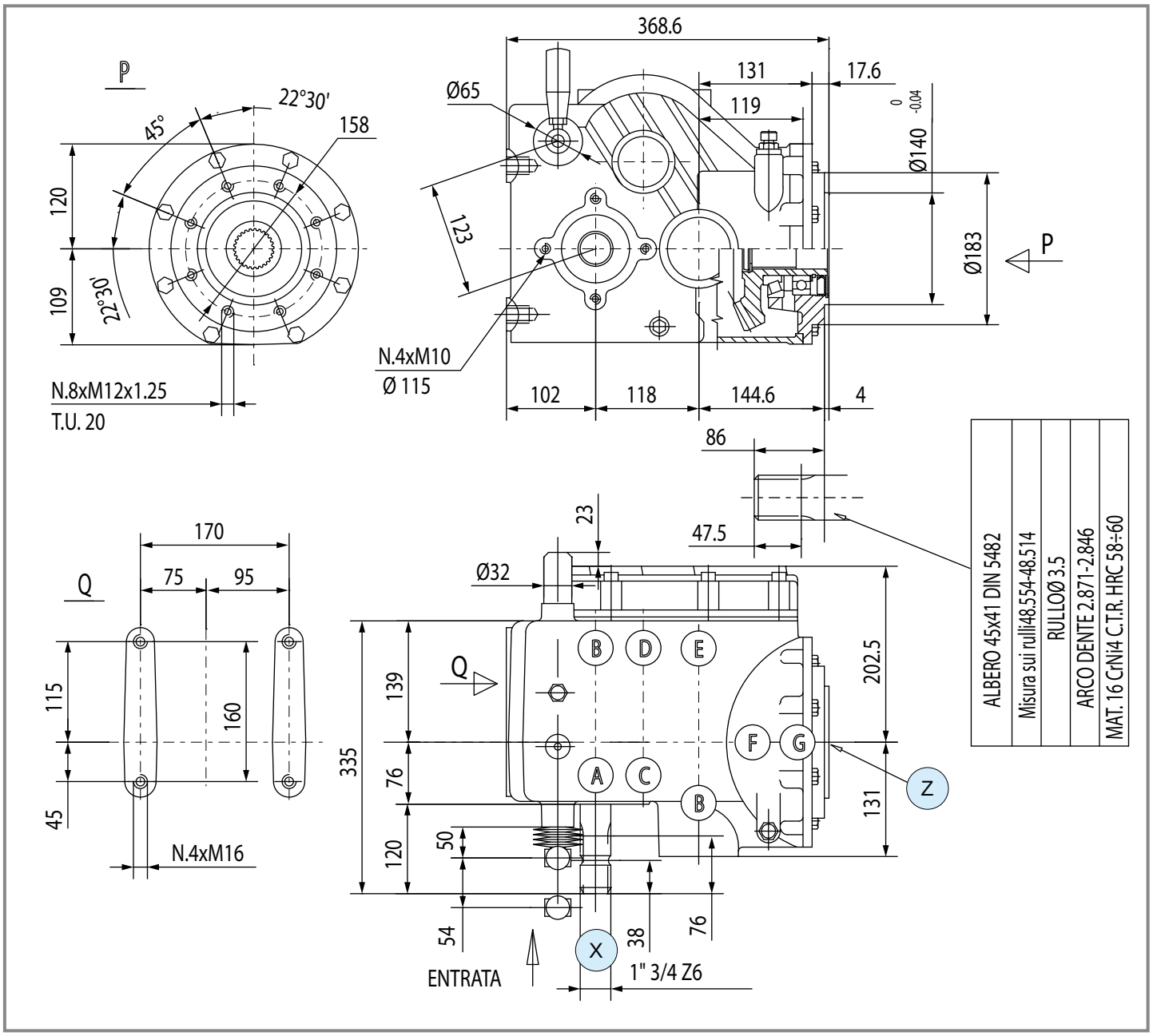

	i	N_1 [rpm]	P_1 [kW]	M_2 [Nm]	Shaft type X	Y	Z	Input	Leght	Code	Mounting	
R	**2.21** **2.75**	540	51.5	-	5  1" 3/4 Z6	-	40  41x45 DIN5482	X		9.811.700	227 	std

comer industries

MZ-812F

Code **812**

(2.01)

[kg] 69.4 | [l] -

Per configurazioni non a catalogo contattare Servizio Tecnico-Commerciale
For non-catalog configurations contact Technical-Commercial Service

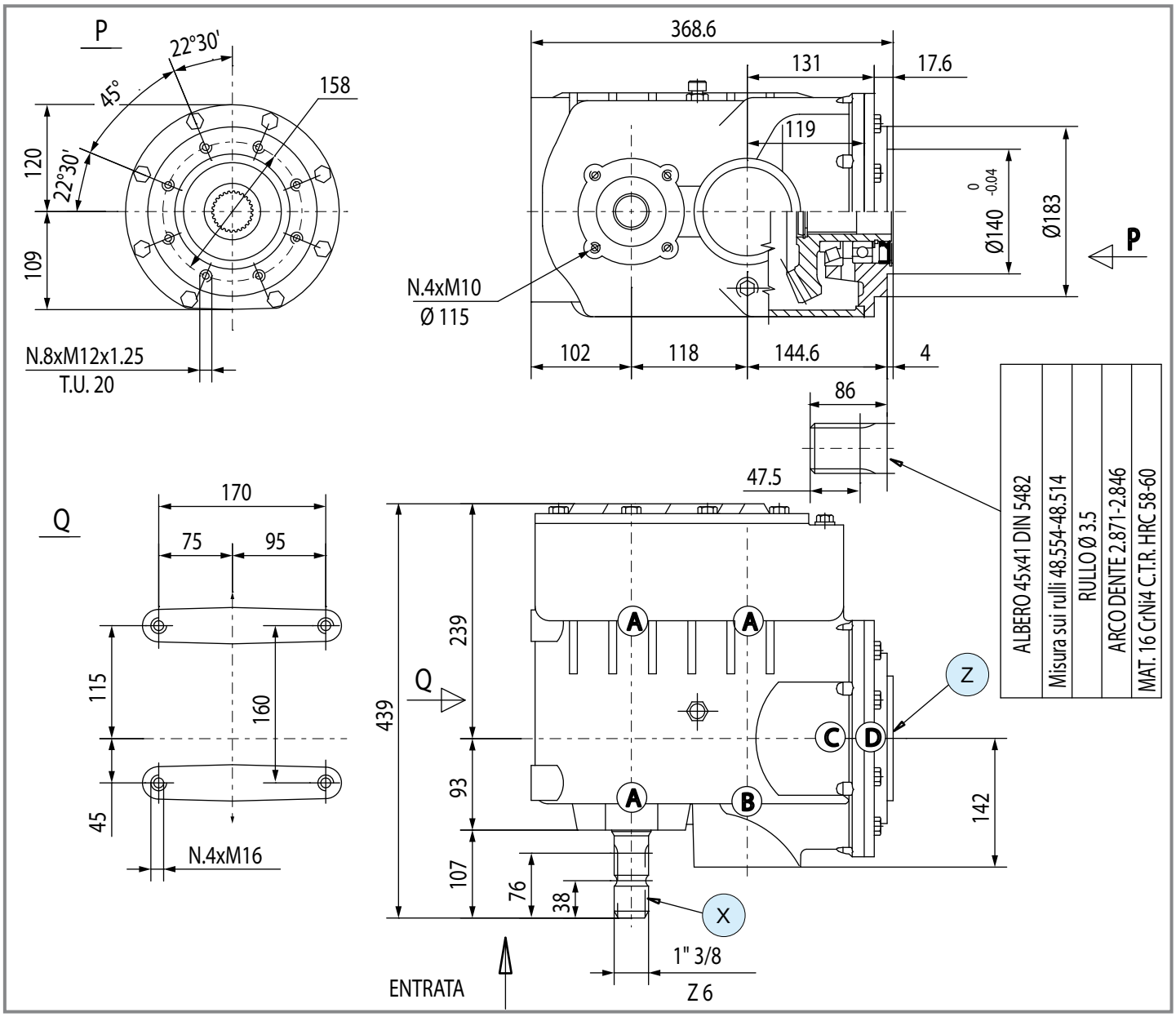

	i	N_1 [rpm]	P_1 [kW]	M_2 [Nm]	Shaft type X	Shaft type Y	Shaft type Z	Input	Leght	Code	Mounting	
R	**3.19** **1.34**	540	51.5	-	5 — 1" 3/4 Z6	-	40 — 41x45 DIN5482	X		9.812.701	38	std

DZ-816F

Code **816**

(2.01)

[kg] 154 | [l] -

Per configurazioni non a catalogo contattare Servizio Tecnico-Commerciale
For non-catalog configurations contact Technical-Commercial Service

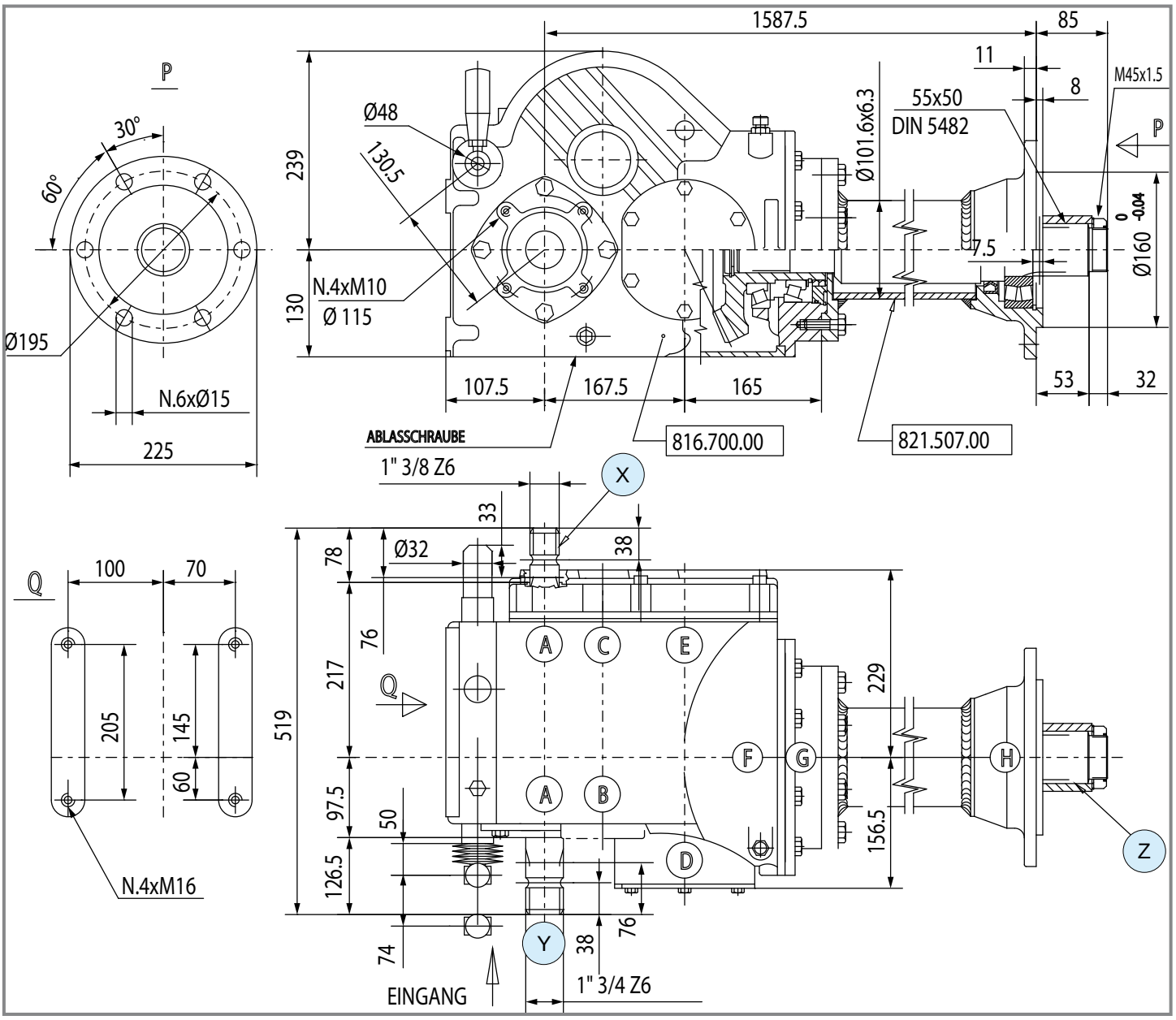

	i	N_1 [rpm]	P_1 [kW]	M_2 [Nm]	Shaft type X	Shaft type Y	Shaft type Z	Input	Leght	Code	Mounting	
R	**2.48** **2.13** **1.84**	1000	70	-	1 — 1" 3/8 Z6	5 — 1" 3/4 Z6	41 — 50x55 DIN5482	Y		-	38	special

comer industries

MZ-817F

Code **817**

(2.01)

[kg] 100 | [l] -

Per configurazioni non a catalogo contattare Servizio Tecnico-Commerciale
For non-catalog configurations contact Technical-Commercial Service

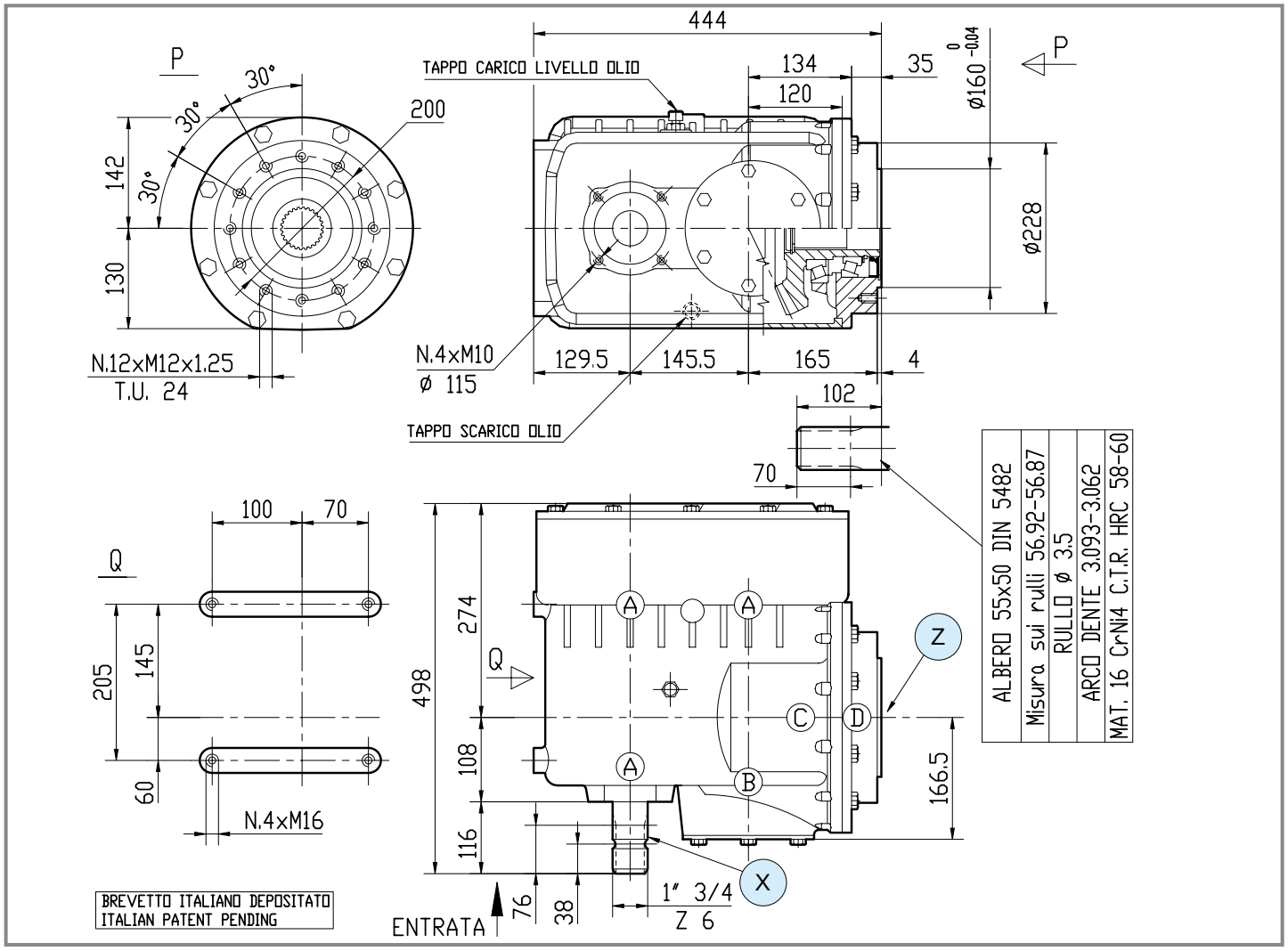

	i	N_1 [rpm]	P_1 [kW]	M_2 [Nm]	Shaft type X	Shaft type Y	Shaft type Z	Input	Leght	Code	Mounting	
R	**1.80** **2.39**	1000	70	-	5  1" 3/4 Z6	-	41 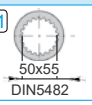 50x55 DIN5482	X	1250	9.817.702	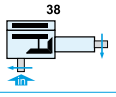 38	std

DZ-821F

Code **821**

(2.01)

[kg] 146.7 | [l] -

Per configurazioni non a catalogo contattare Servizio Tecnico-Commerciale
For non-catalog configurations contact Technical-Commercial Service

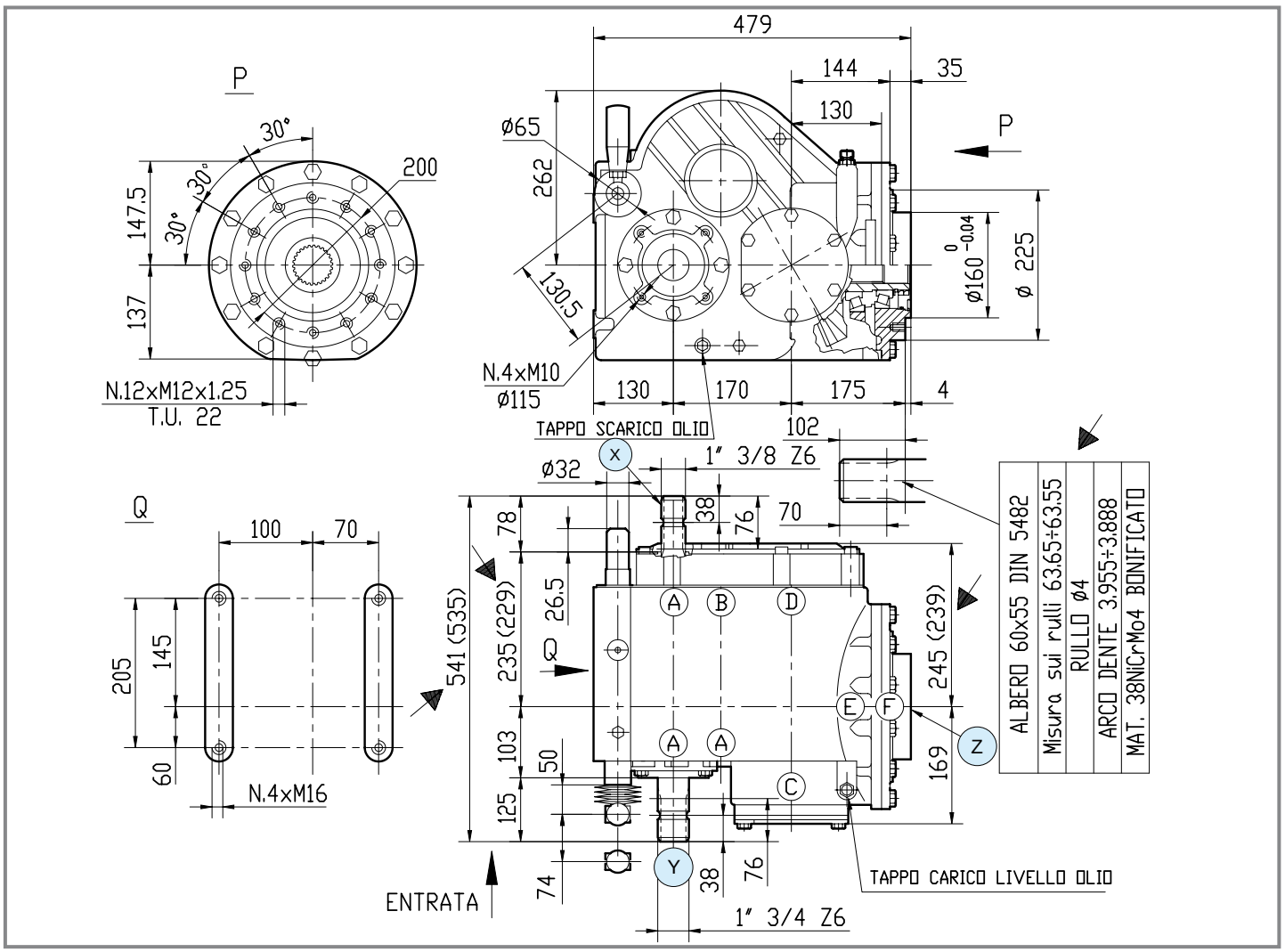

	i	N_1 [rpm]	P_1 [kW]	M_2 [Nm]	Shaft type X	Shaft type Y	Shaft type Z	Input	Leght	Code	Mounting	
R	**2.44 2.98 3.67**	1000	96	-	5 1" 3/4 Z6	5 1" 3/4 Z6	41 50x55 DIN5482	Y		9.821.751	38	std
R	**2.78 3.41 4.19**	1000	96	-	5 1" 3/4 Z6	5 1" 3/4 Z6	41 50x55 DIN5482	Y		-	-	special

comer industries

MZ-822F

Code **822**

(2.01)

[kg] 112.8 | [l] -

Per configurazioni non a catalogo contattare Servizio Tecnico-Commerciale
For non-catalog configurations contact Technical-Commercial Service

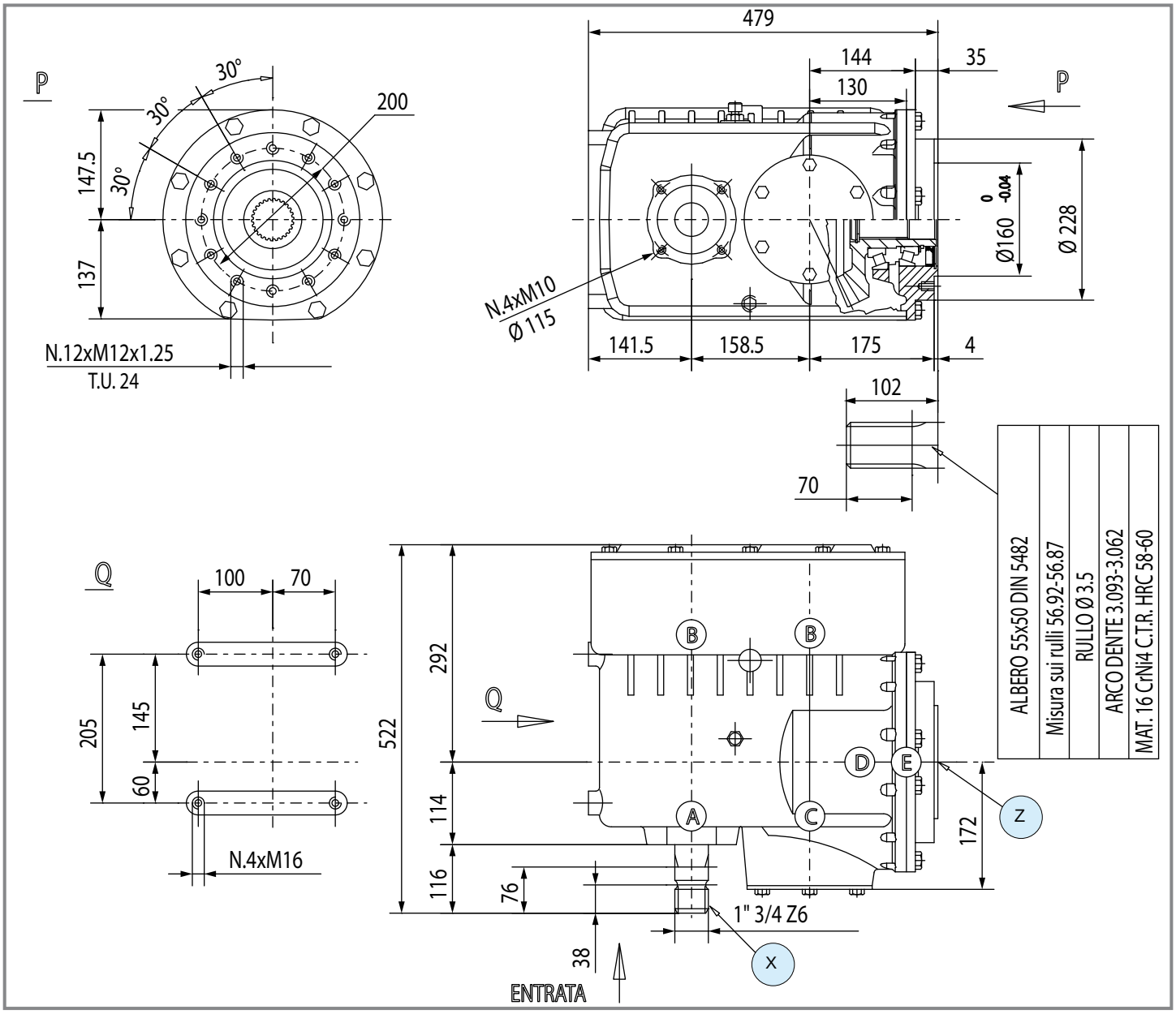

	i	N_1 [rpm]	P_1 [kW]	M_2 [Nm]	Shaft type X	Shaft type Y	Shaft type Z	Input	Leght	Code	Mounting	
R	**2.98** **1.44**	1000	96	-	5  1" 3/4 Z6	-	41  50x55 DIN5482	X	-	-	-	special
	3.19 **1.34**	1000	96	-	5 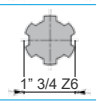 1" 3/4 Z6	-	41 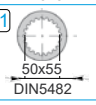 50x55 DIN5482	X	-	9.822.700	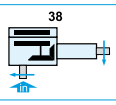 38	std

MZ-827F

Code **827**

(2.03)

[kg] 103 | [l] -

Per configurazioni non a catalogo contattare Servizio Tecnico-Commerciale
For non-catalog configurations contact Technical-Commercial Service

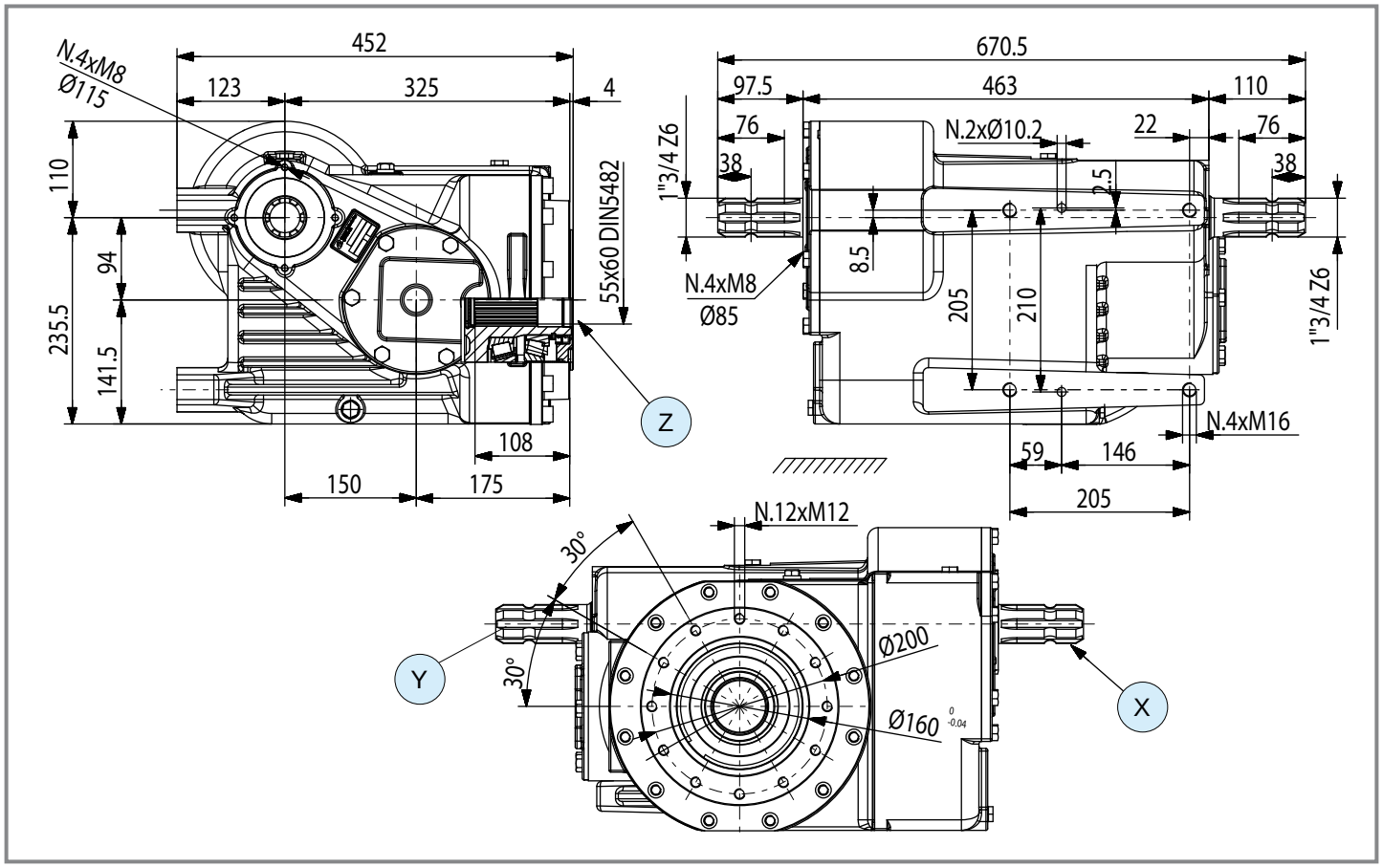

	i	N_1 [rpm]	P_1 [kW]	M_2 [Nm]	Shaft type X	Shaft type Y	Shaft type Z	Input	Leght	Code	Mounting	
R	**2.95** **1.16**	1000	147	-	5  1" 3/4 Z6	5  1" 3/4 Z6	42  55x60 DIN5482	Y		9.827.001	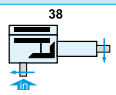 38	std

comer industries

LTV-14F

Code **113**

(2.03)

[kg] 31 | [l] 1.15

Per configurazioni non a catalogo contattare Servizio Tecnico-Commerciale
For non-catalog configurations contact Technical-Commercial Service

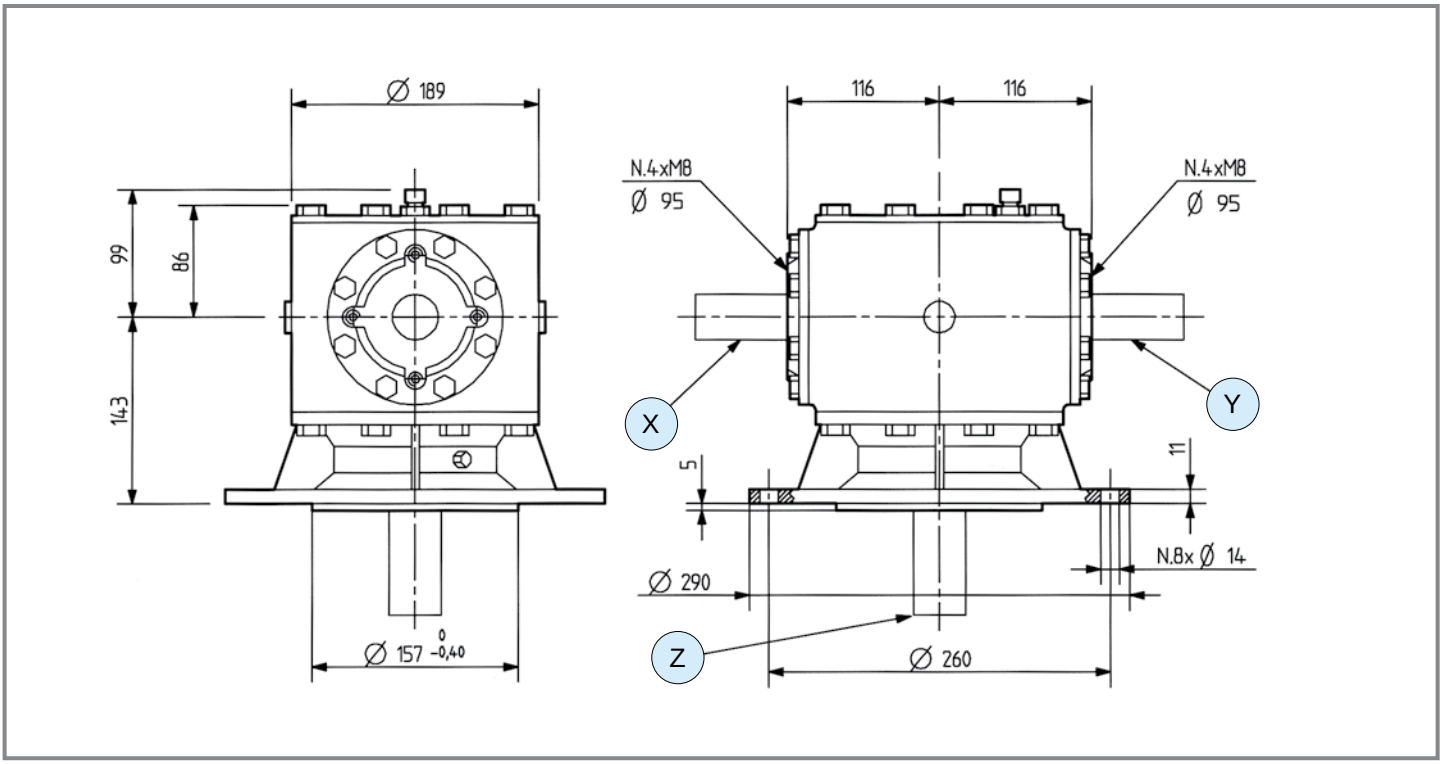

	i	N_1 [rpm]	P_1 [kW]	M_2 [Nm]	Shaft type X	Shaft type Y	Shaft type Z	Input	Leght	Code	Mounting	
R	**1.92**	540	29.5	965	5 — 1" 3/4 Z6	5 — 1" 3/4 Z6	34 — 40x44 DIN5482	X	-	9.113.210	11 / 12	std

TV-274A

Code **274**

(2.03)

[kg] 51 | [l] 1.8

Per configurazioni non a catalogo contattare Servizio Tecnico-Commerciale
For non-catalog configurations contact Technical-Commercial Service

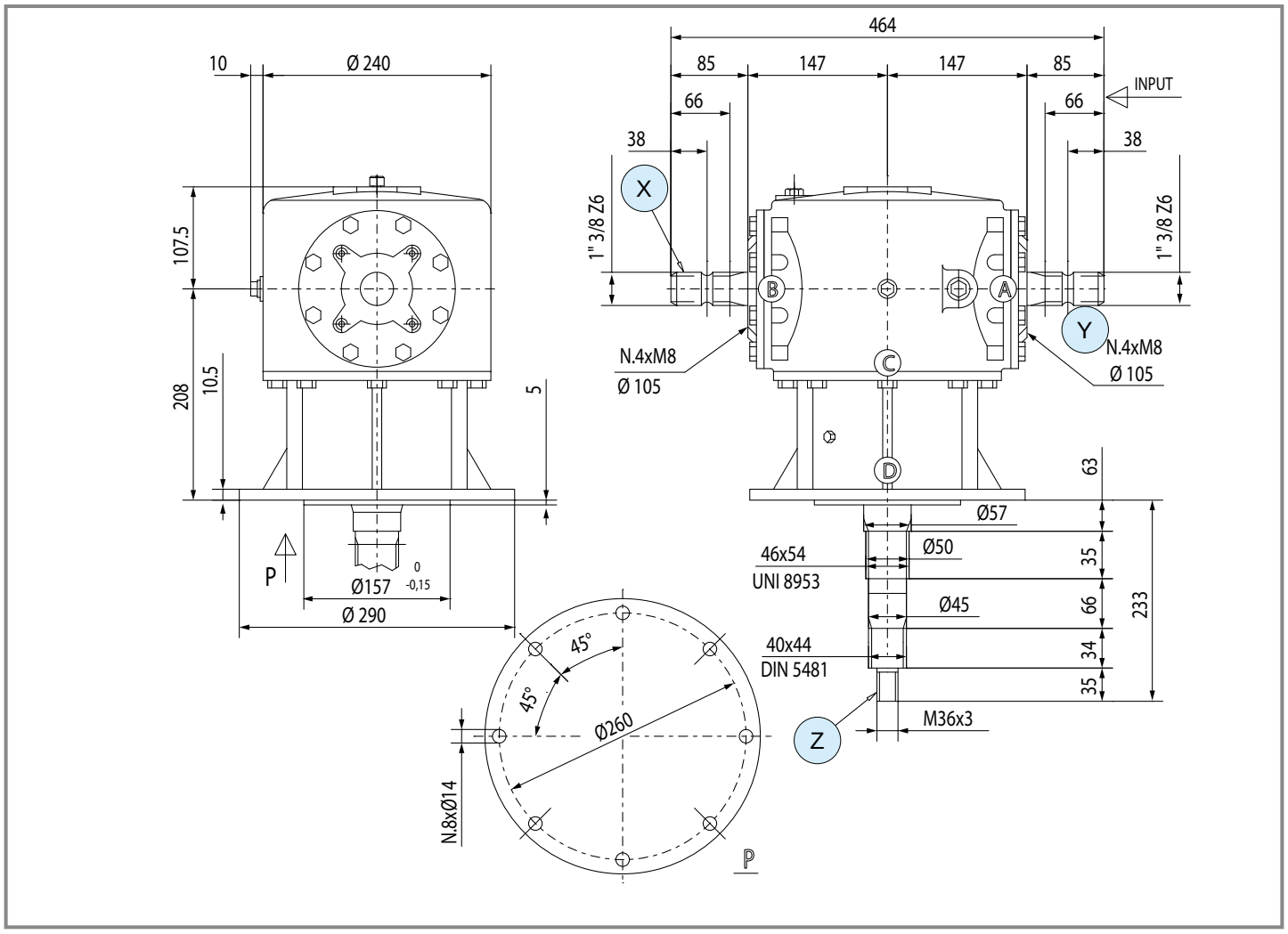

	i	N_1 [rpm]	P_1 [kW]	M_2 [Nm]	Shaft type X	Shaft type Y	Shaft type Z	Input	Leght	Code	Mounting	
R	**1.93**	540	58.9	1947	1 — 1" 3/8 Z6	1 — 1" 3/8 Z6	34 — 40x44 DIN5482 33 — 46x54 DIN5482	X	-	9.274.204	11 12	std

comer industries

TV-301H

Code **301**

(2.03)

[kg] 62 | [l] -

Per configurazioni non a catalogo contattare Servizio Tecnico-Commerciale
For non-catalog configurations contact Technical-Commercial Service

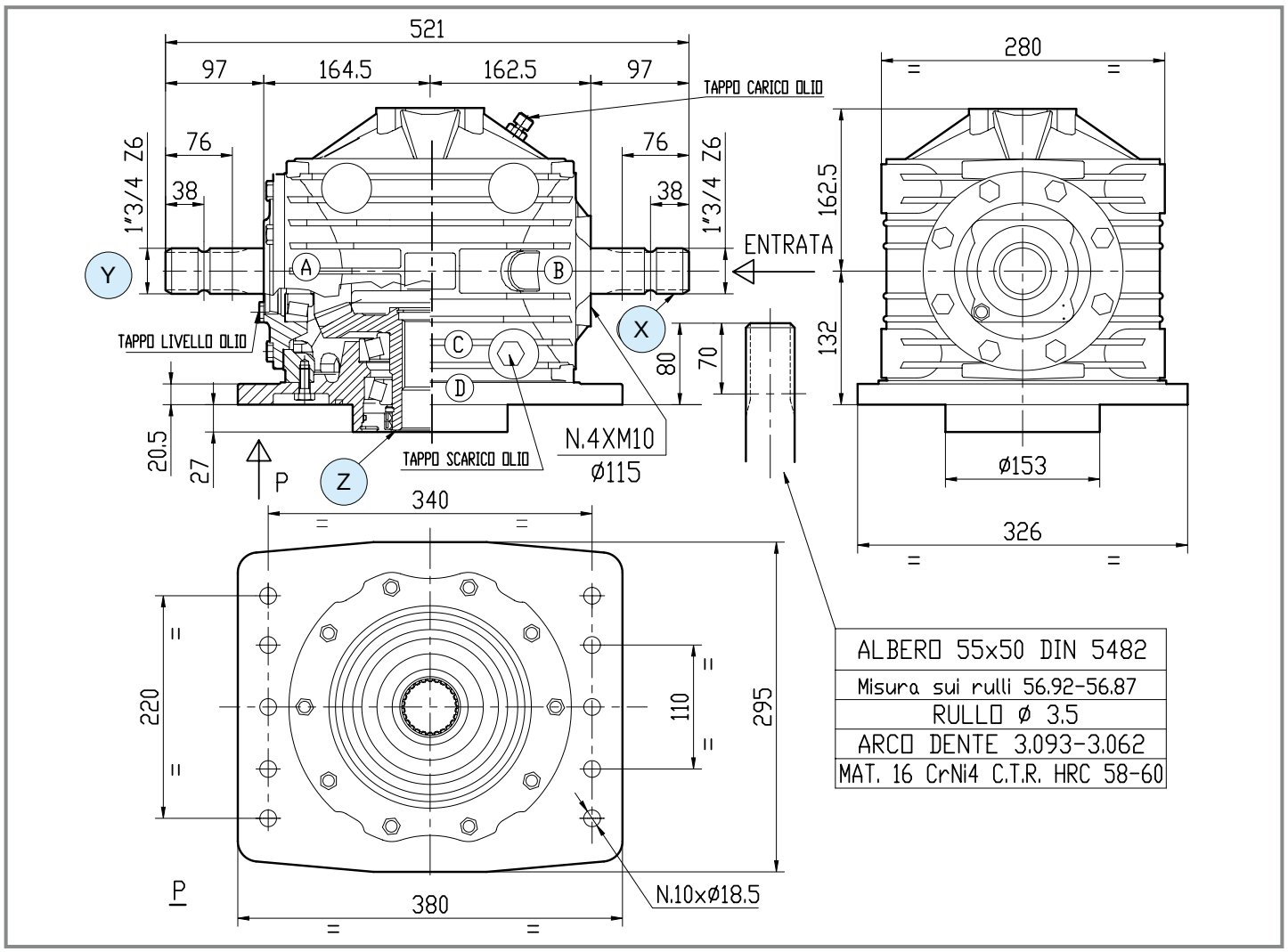

	i	N_1 [rpm]	P_1 [kW]	M_2 [Nm]	Shaft type X	Shaft type Y	Shaft type Z	Input	Leght	Code	Mounting	
R	**2.42**	1000	73.5	1947	5 1" 3/4 Z6	5 1" 3/4 Z6	42 55x60 DIN5482	X	-	9.301.700	11 12	std

DV-813F

Code **813**

(2.03)

[kg] 77 | [l] -

Per configurazioni non a catalogo contattare Servizio Tecnico-Commerciale
For non-catalog configurations contact Technical-Commercial Service

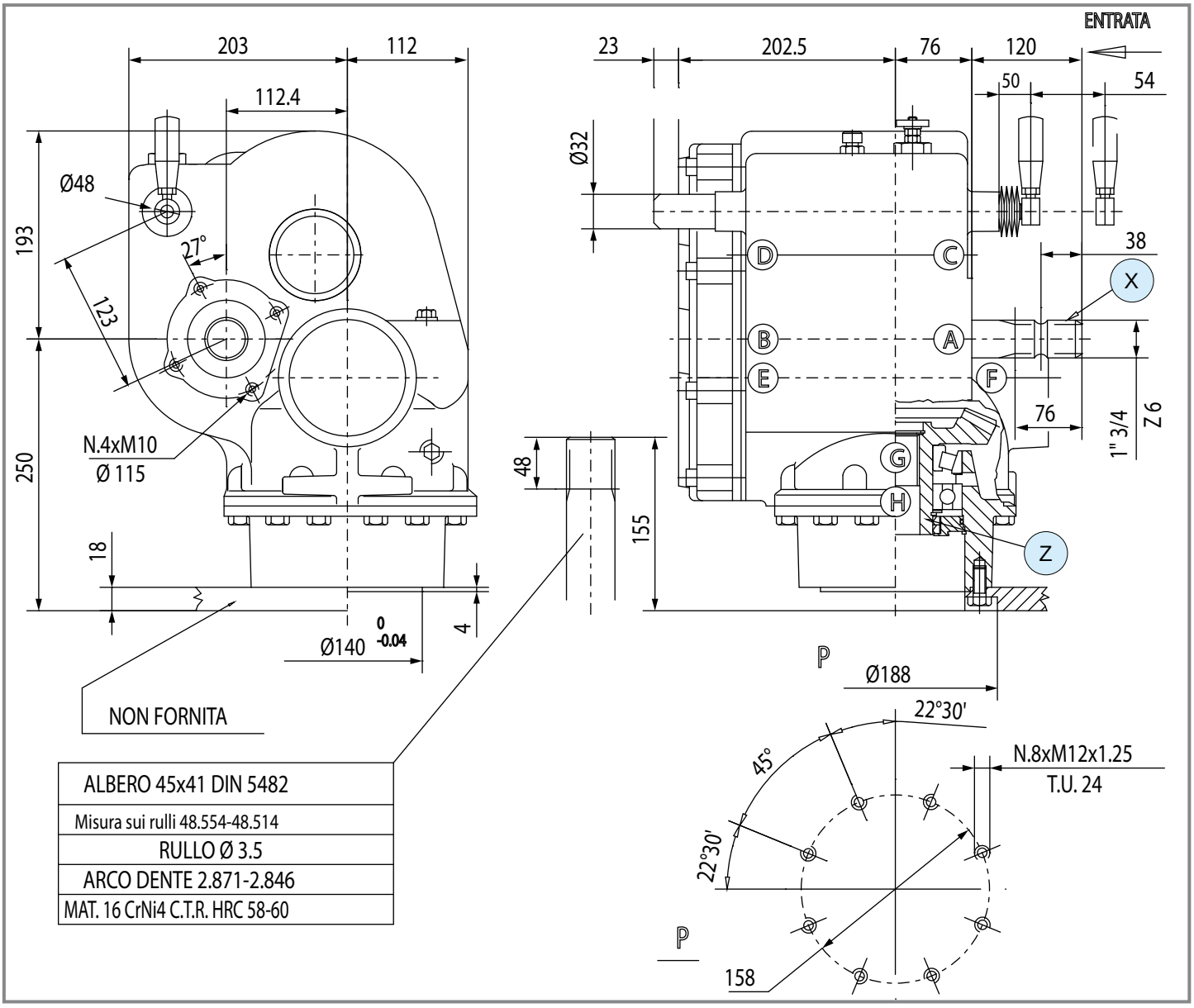

	i	N_1 [rpm]	P_1 [kW]	M_2 [Nm]	Shaft type X	Y	Z	Input	Leght	Code	Mounting	
R	**1.34 3.19**	540	51.5	-	1 — 1" 3/8 Z6	-	40 — 41x45 DIN5482	X	-	-	38	special

comer industries

MV-814F

Code **814**

(2.03)

[kg] 64 | [l] -

Per configurazioni non a catalogo contattare Servizio Tecnico-Commerciale
For non-catalog configurations contact Technical-Commercial Service

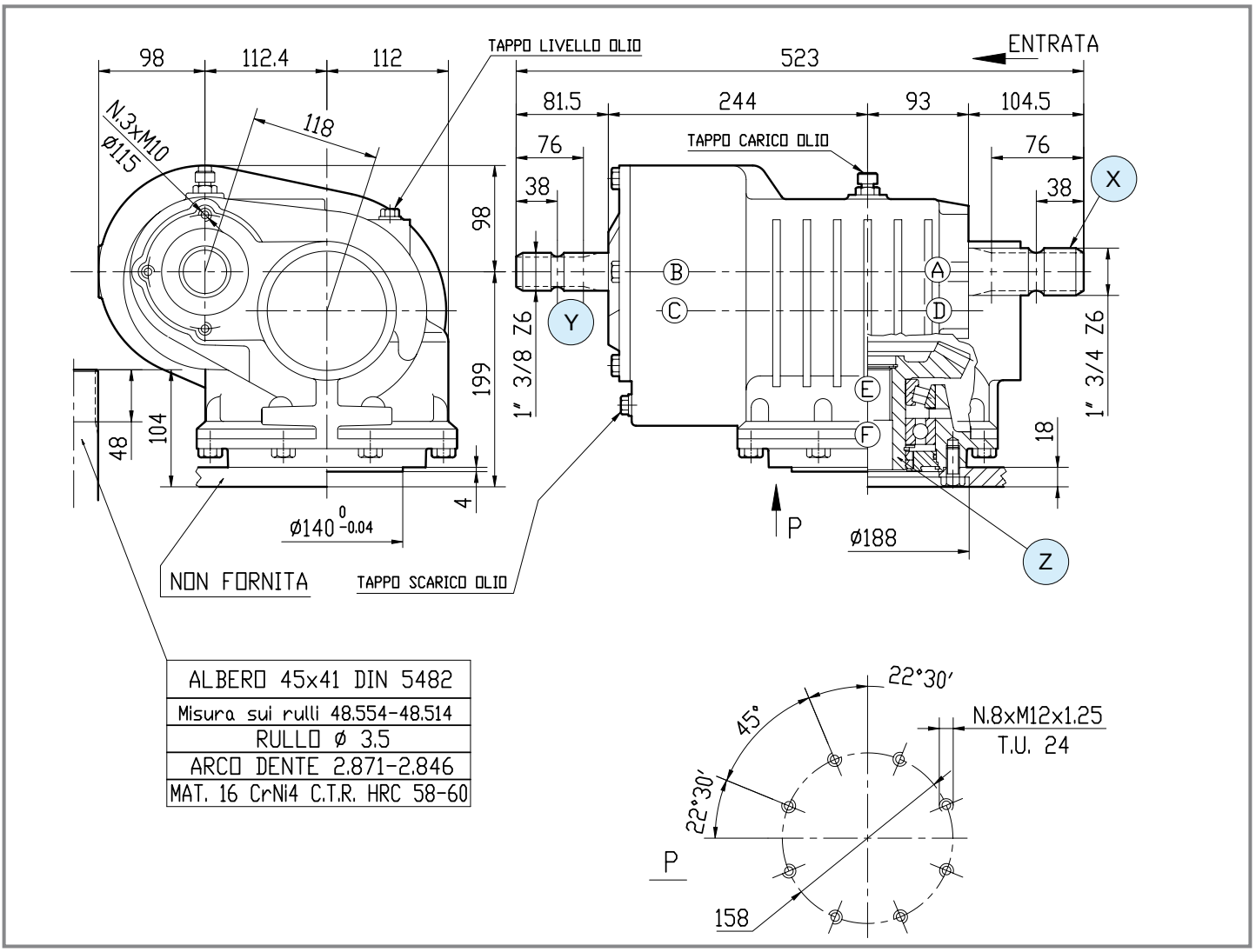

	i	N_1 [rpm]	P_1 [kW]	M_2 [Nm]	Shaft type X	Shaft type Y	Shaft type Z	Input	Leght	Code	Mounting	
R	**1.73** **2.47**	540	51.5	-	5 — 1" 3/4 Z6	1 — 1" 3/8 Z6	40 — 41x45 DIN5482	X	237	9.814.015	226	std
	1.73 **2.47**	540	51.5	-	5 — 1" 3/4 Z6	1 — 1" 3/8 Z6	40 — 41x45 DIN5482	X	237	9.814.016	225	std
	1.62 **2.65**	540	51.5	-	5 — 1" 3/4 Z6	1 — 1" 3/8 Z6	40 — 41x45 DIN5482	X	250	9.814.003	226	std
	1.62 **2.65**	540	51.5	-	5 — 1" 3/4 Z6	1 — 1" 3/8 Z6	40 — 41x45 DIN5482	X	200	9.814.008	226	std
	1.86 **2.30**	540	51.5	-	5 — 1" 3/4 Z6	1 — 1" 3/8 Z6	40 — 41x45 DIN5482	X	250	9.814.020	226	std
	1.86 **2.30**	540	51.5	-	5 — 1" 3/4 Z6	1 — 1" 3/8 Z6	40 — 41x45 DIN5482	X	250	9.814.021	226	std

MV-817F

Code **817**

(2.03)

[kg] 100 | [l] -

Per configurazioni non a catalogo contattare Servizio Tecnico-Commerciale
For non-catalog configurations contact Technical-Commercial Service

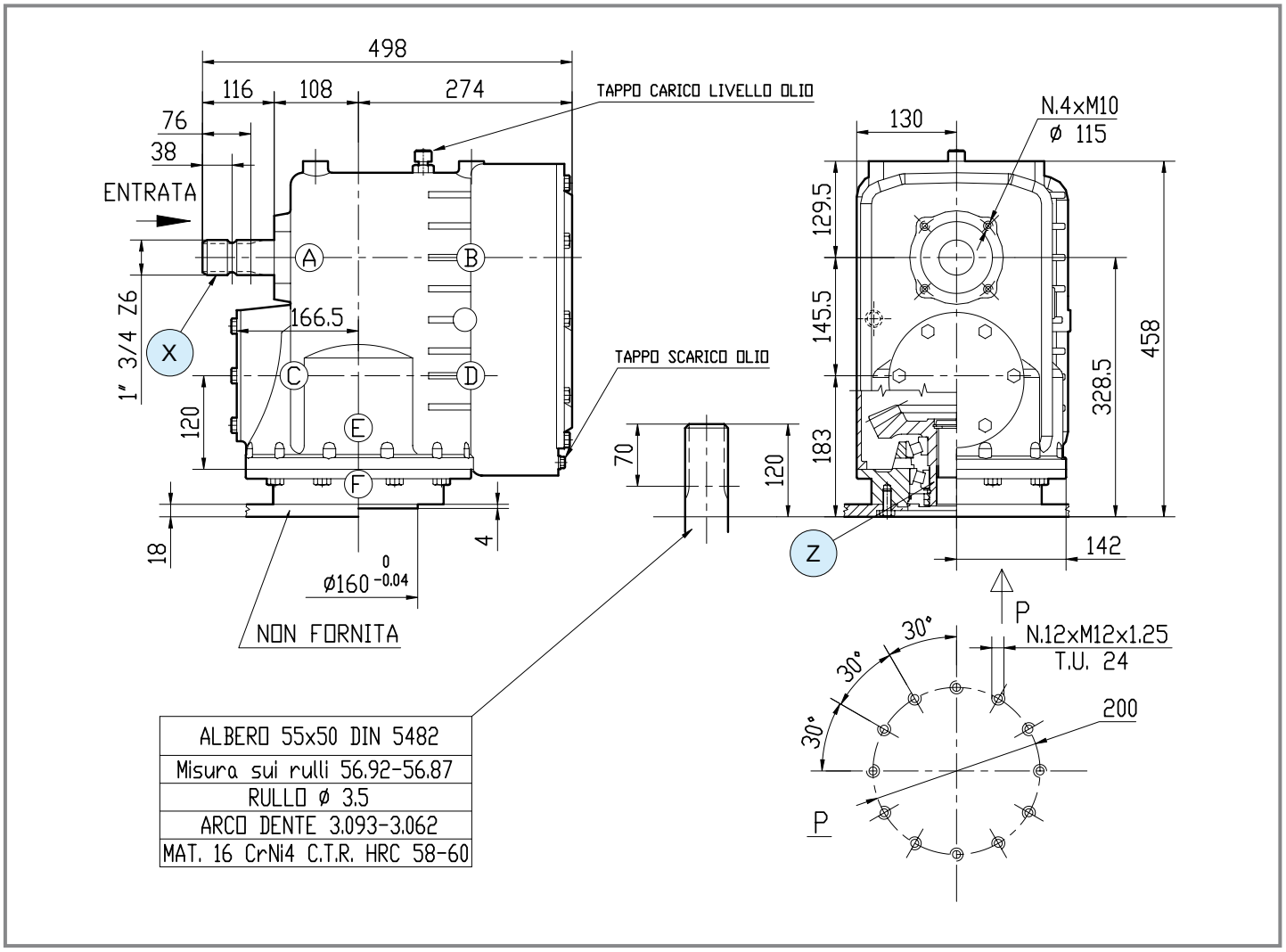

	i	N_1 [rpm]	P_1 [kW]	M_2 [Nm]	Shaft type X	Y	Z	Input	Leght	Code	Mounting	
R	**1.55 2.75**	1000	70	-	5 1" 3/4 Z6	-	41 50x55 DIN5482	X	-	9.817.800	20	std
R	**1.55 2.75**	1000	70	-	5 1" 3/4 Z6	-	41 50x55 DIN5482	X	-	9.817.801	19	std
	1.15 3.73	1000	70	-	5 1" 3/4 Z6	-	41 50x55 DIN5482	X	-	-	-	special

comer industries

DV-818F

Code **818**

(2.03)

[kg] 112 | [l] -

Per configurazioni non a catalogo contattare Servizio Tecnico-Commerciale
For non-catalog configurations contact Technical-Commercial Service

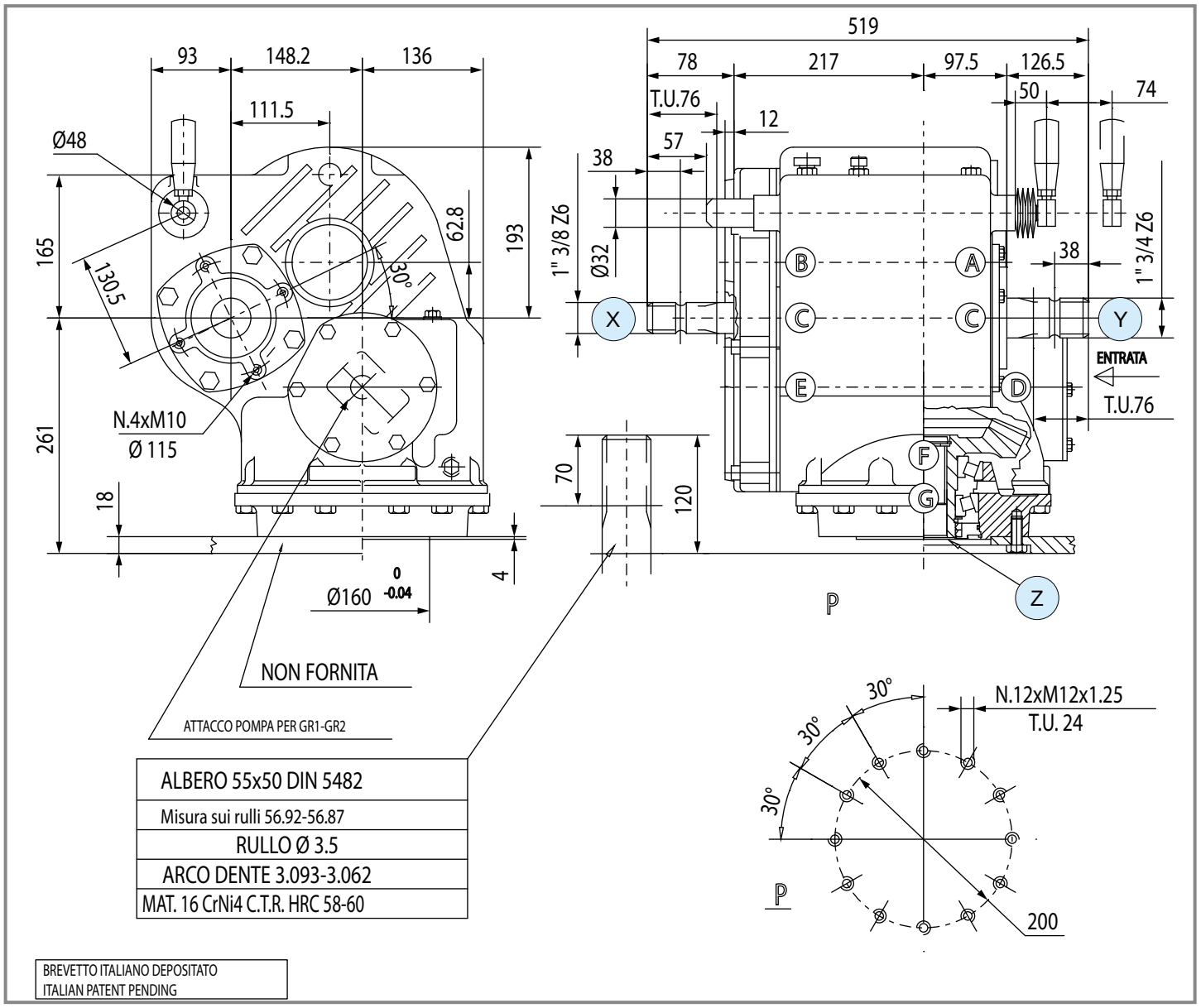

	i	N_1 [rpm]	P_1 [kW]	M_2 [Nm]	Shaft type X	Shaft type Y	Shaft type Z	Input	Leght	Code	Mounting	
R	**2.30** **2.65** **3.08**	1000	70	-	1 — 1" 3/8 Z6	5 — 1" 3/4 Z6	41 — 50x55 DIN5482	Y	-	-	-	special

MV-819F

Code **819**

(2.03)

[kg] 94 | [l] -

Per configurazioni non a catalogo contattare Servizio Tecnico-Commerciale
For non-catalog configurations contact Technical-Commercial Service

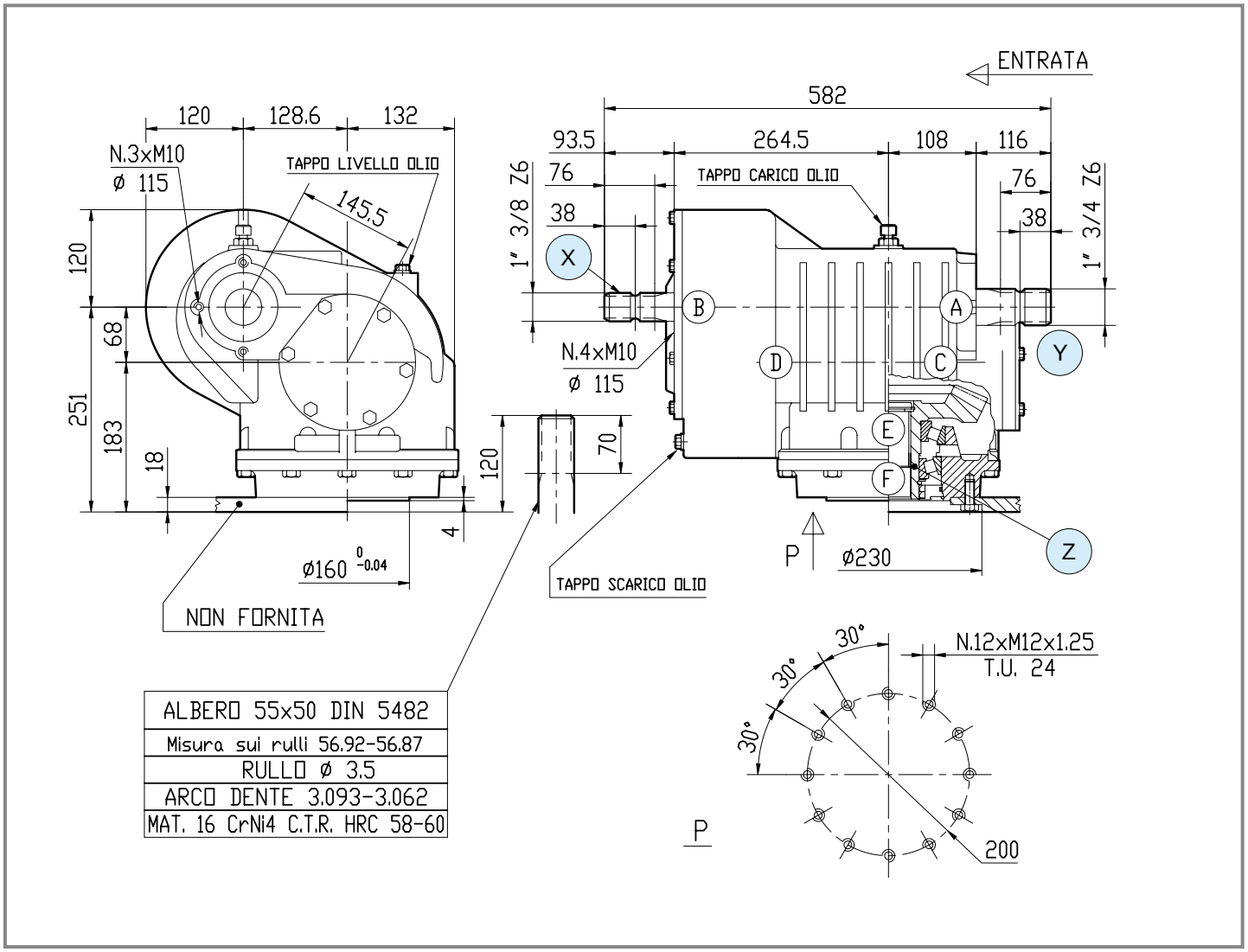

	i	N_1 [rpm]	P_1 [kW]	M_2 [Nm]	Shaft type X	Shaft type Y	Shaft type Z	Input	Leght	Code	Mounting	
R	**1.55 2.76**	1000	70	-	1 — 1" 3/8 Z6	5 — 1" 3/4 Z6	41 — 50x55 DIN5482	Y		9.819.004	226	std
R	**1.55 2.76**	1000	70	-	1 — 1" 3/8 Z6	5 — 1" 3/4 Z6	41 — 50x55 DIN5482	Y		9.819.005	225	std
	1.34 3.2	1000	70	-	1 — 1" 3/8 Z6	5 — 1" 3/4 Z6	41 — 50x55 DIN5482	Y		9.819.003	226	std

comer industries

DV-823F

Code **823**

(2.03)

[kg] 140 | [l] -

Per configurazioni non a catalogo contattare Servizio Tecnico-Commerciale
For non-catalog configurations contact Technical-Commercial Service

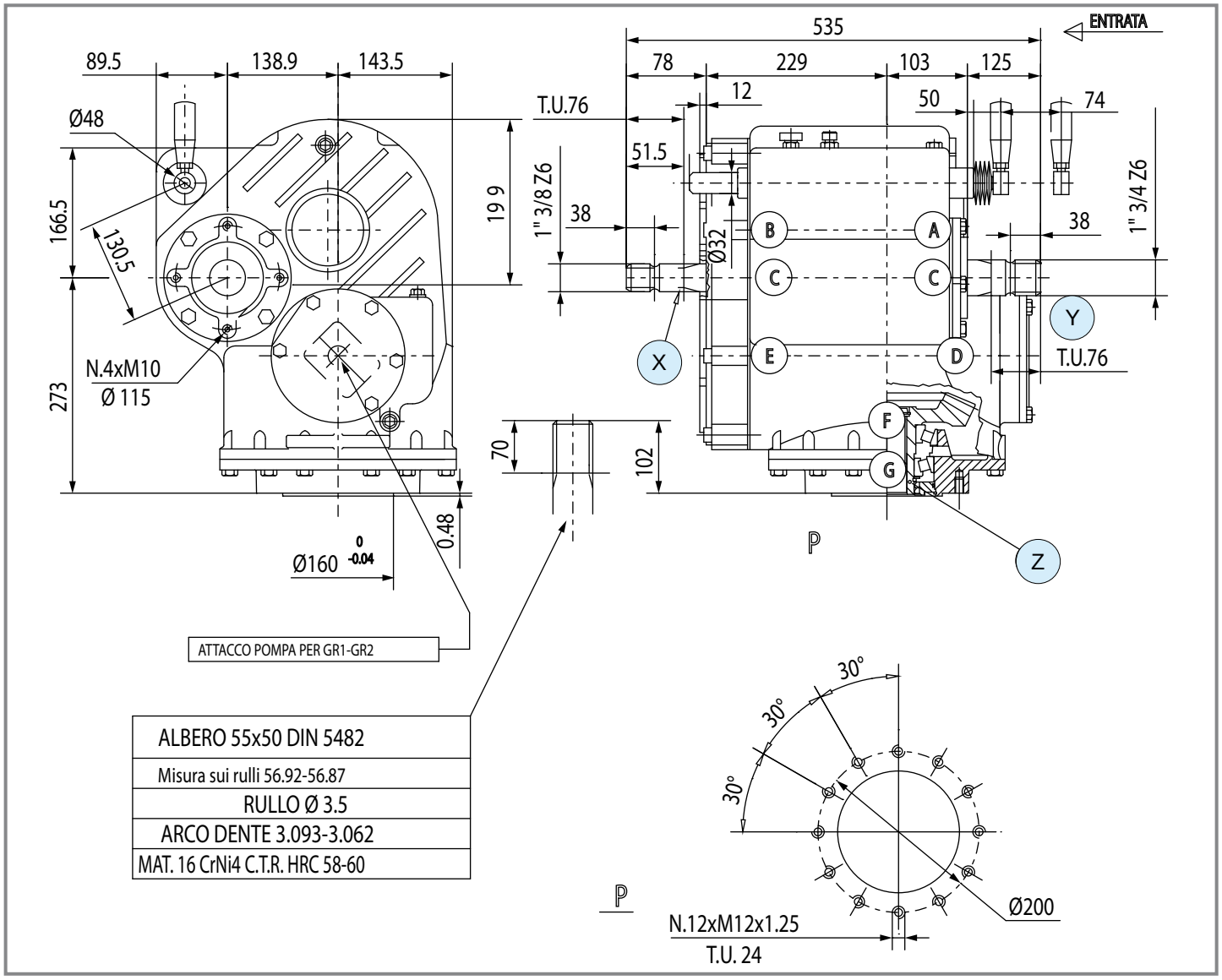

	i	N_1 [rpm]	P_1 [kW]	M_2 [Nm]	Shaft type X	Shaft type Y	Shaft type Z	Input	Leght	Code	Mounting	
R	**3.68 3.00 2.44**	1000	96	-	1 — 1" 3/8 Z6	5 — 1" 3/4 Z6	41 — 50x55 DIN5482	Y	-	-	-	std
R	**4.20 3.40 2.80**	1000	96	-	1 — 1" 3/8 Z6	5 — 1" 3/4 Z6	41 — 50x55 DIN5482	Y	-	-	-	std

MV-824F

Code **824**

(2.03)

[kg] 110 | [l] -

Per configurazioni non a catalogo contattare Servizio Tecnico-Commerciale
For non-catalog configurations contact Technical-Commercial Service

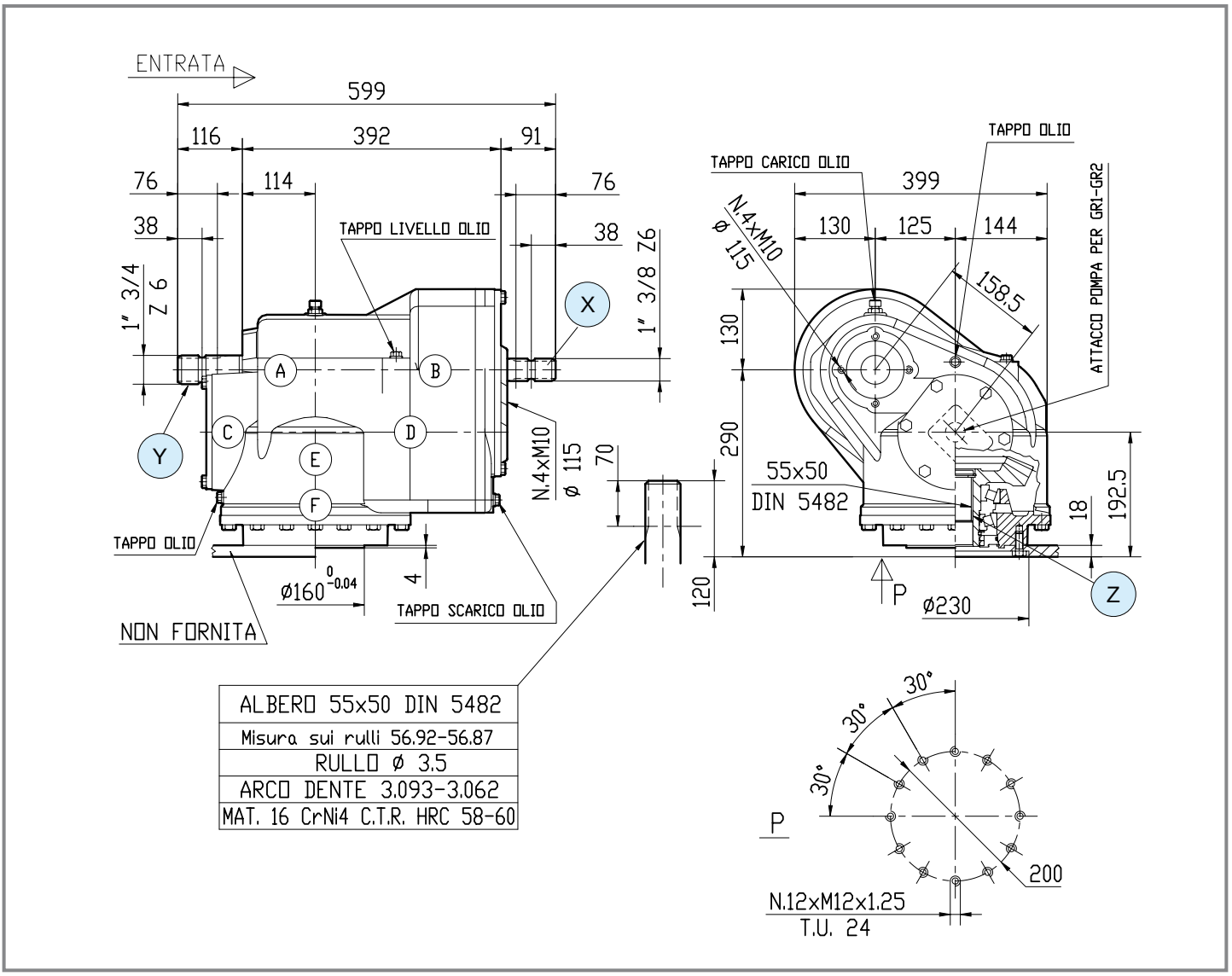

	i	N_1 [rpm]	P_1 [kW]	M_2 [Nm]	Shaft type X	Shaft type Y	Shaft type Z	Input	Leght	Code	Mounting	
R	**1.54** **2.78**	1000	96	-	1 — 1" 3/8 Z6	5 — 1" 3/4 Z6	42 — 55x60 DIN5482	X	-	9.824.004	226	std
R	**1.54** **2.78**	1000	96	-	1 — 1" 3/8 Z6	5 — 1" 3/4 Z6	42 — 55x60 DIN5482	X	-	9.824.007	225	std
R	**1.34** **3.20**	1000	96	-	1 — 1" 3/8 Z6	5 — 1" 3/4 Z6	42 — 55x60 DIN5482	X	-	-	226	special
R	**1.34** **3.20**	1000	96	-	1 — 1" 3/8 Z6	5 — 1" 3/4 Z6	42 — 55x60 DIN5482	X	-	-	225	special

comer industries

DV-733F

Code **733**

(2.03)

[kg] 143 | [l] -

Per configurazioni non a catalogo contattare Servizio Tecnico-Commerciale
For non-catalog configurations contact Technical-Commercial Service

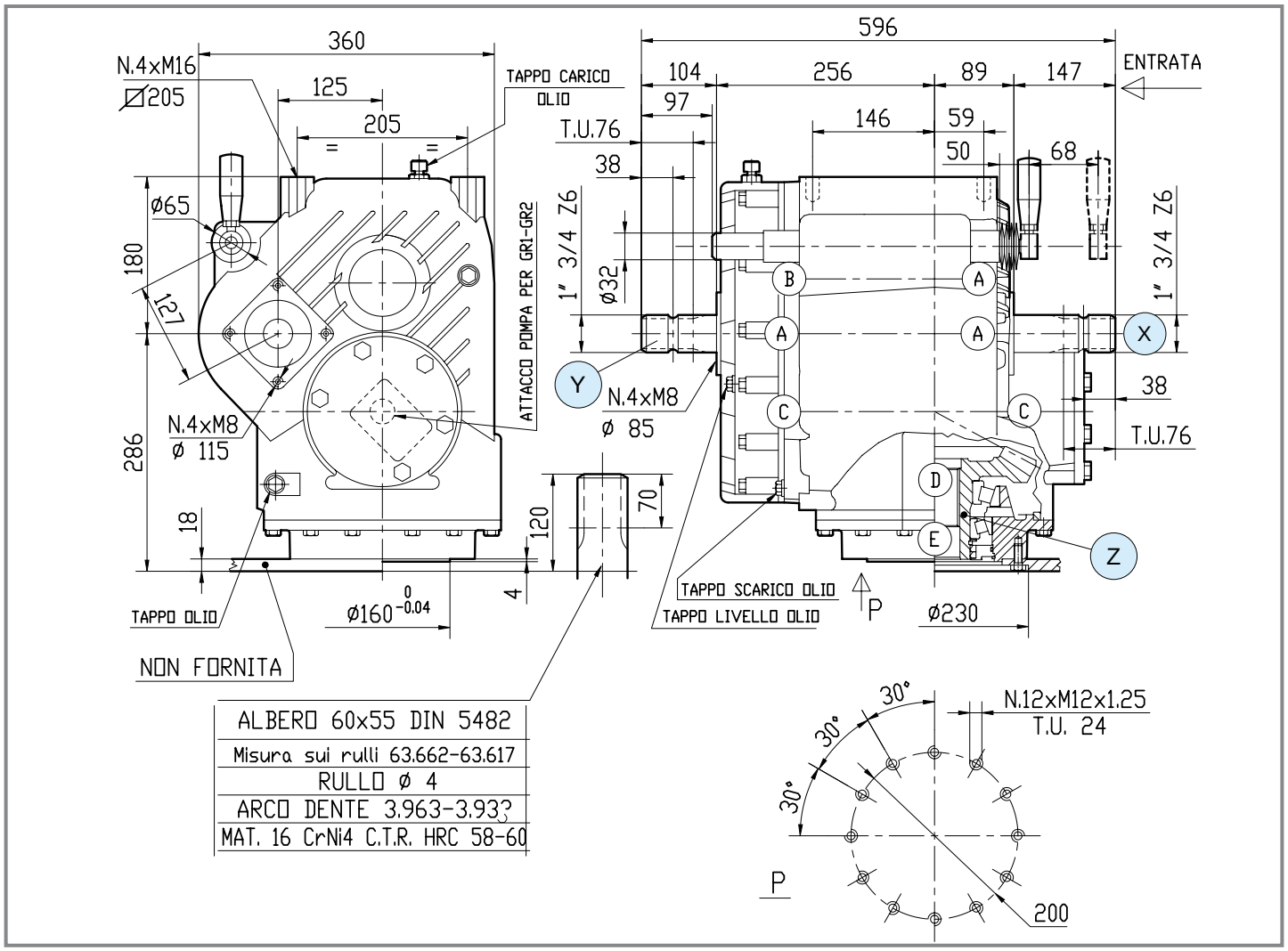

	i	N_1 [rpm]	P_1 [kW]	M_2 [Nm]	Shaft type X	Shaft type Y	Shaft type Z	Input	Leght	Code	Mounting	
R	**2.56** **2.98**	1000	132	-	5  1" 3/4 Z6	5  1" 3/4 Z6	42  55x60 DIN5482	X	-	9.733.004	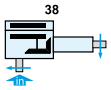 38	std

Zappatrici, fresatrici ed erpici rotanti
Rotary Tillers and Rotary Harrows

MV-826F

Code **826**

(2.03)

[kg] 122 | [l] -

Per configurazioni non a catalogo contattare Servizio Tecnico-Commerciale
For non-catalog configurations contact Technical-Commercial Service

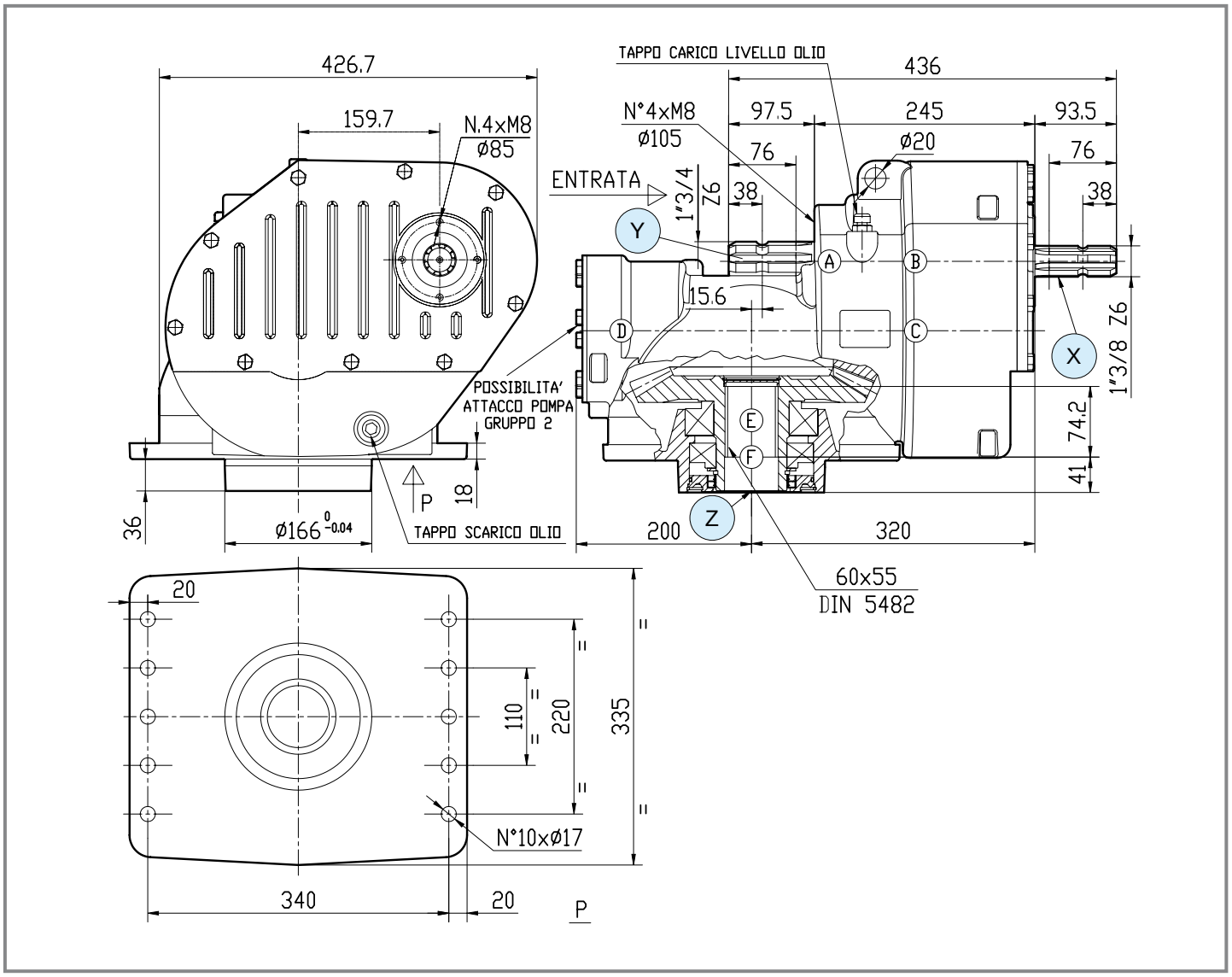

	i	N_1 [rpm]	P_1 [kW]	M_2 [Nm]	Shaft type X	Shaft type Y	Shaft type Z	Input	Leght	Code	Mounting	
R	**1.62 2.74**	1000	147	-	1 — 1" 3/8 Z6	5 — 1" 3/4 Z6	42 — 55x60 DIN5482	Y	-	9.826.002	225	std
R	**1.62 2.74**	1000	147	-	1 — 1" 3/8 Z6	5 — 1" 3/4 Z6	42 — 55x60 DIN5482	Y	-	9.826.003	226	std
R	**1.32 3.35**	1000	147	-	1 — 1" 3/8 Z6	5 — 1" 3/4 Z6	42 — 55x60 DIN5482	Y	-	9.826.000	226	std
R	**1.32 3.35**	1000	147	-	1 — 1" 3/8 Z6	5 — 1" 3/4 Z6	42 — 55x60 DIN5482	Y	-	9.826.004	225	std

D-825A

Code **825**

(2.03)

[kg] 166 | [l] -

Per configurazioni non a catalogo contattare Servizio Tecnico-Commerciale
For non-catalog configurations contact Technical-Commercial Service

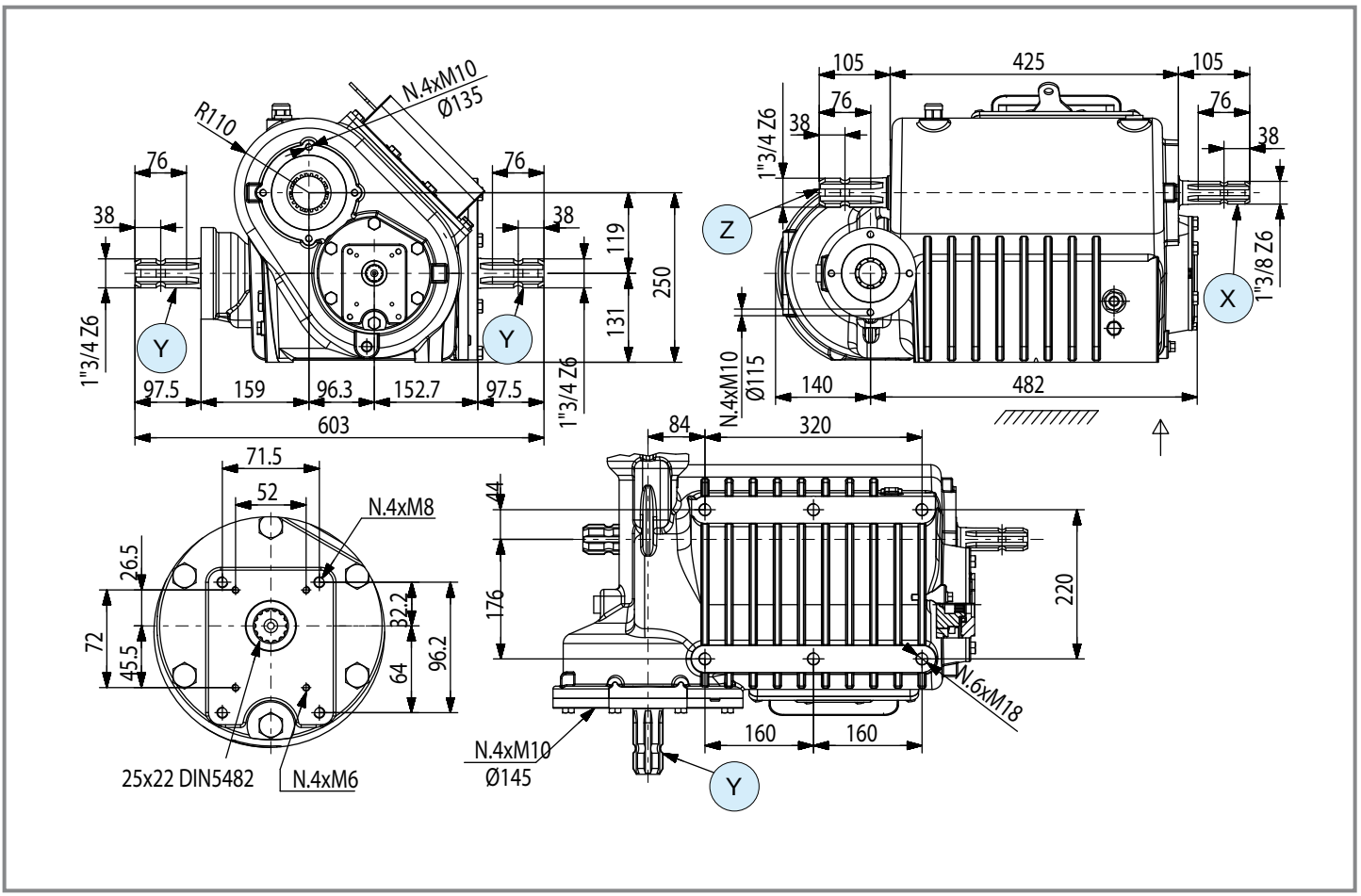

	i	N_1 [rpm]	P_1 [kW]	M_2 [Nm]	Shaft type X	Shaft type Y	Shaft type Z	Input	Features	Code	Mounting	
R	**1.07 1.27 1.68**	1000	290	-	[1] 1" 3/8 Z6	[5] 1" 3/4 Z6	[5] 1" 3/4 Z6	Z	4 alberi 4 shafts	9.825.100	-	std
R	**1.30 1.50 1.80**	1000	220	-	[1] 1" 3/8 Z6	[5] 1" 3/4 Z6	[5] 1" 3/4 Z6	Z	4 alberi 4 shafts	9.825.003	-	std

Per configurazioni non a catalogo contattare Servizio Tecnico-Commerciale
For non-catalog configurations contact Technical-Commercial Service

	i	$M_{2\text{ - max}}$ [Nm]	Tipologia alberi disponibili *Available type of shafts*	p.
T-304C	R 3	947	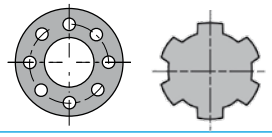	146
L-196J	R 3.18	1004	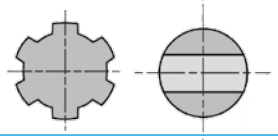	147
T-290F	R 3	1361	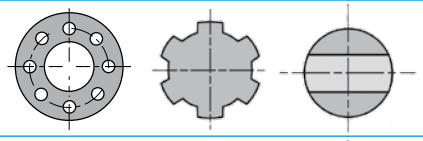	148
T-22A	R 3	1361	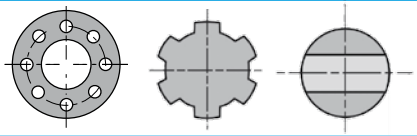	149

T-304C

Code **304**

(2.04)



[kg] 21 | [l] 1.1

Per configurazioni non a catalogo contattare Servizio Tecnico-Commerciale
For non-catalog configurations contact Technical-Commercial Service

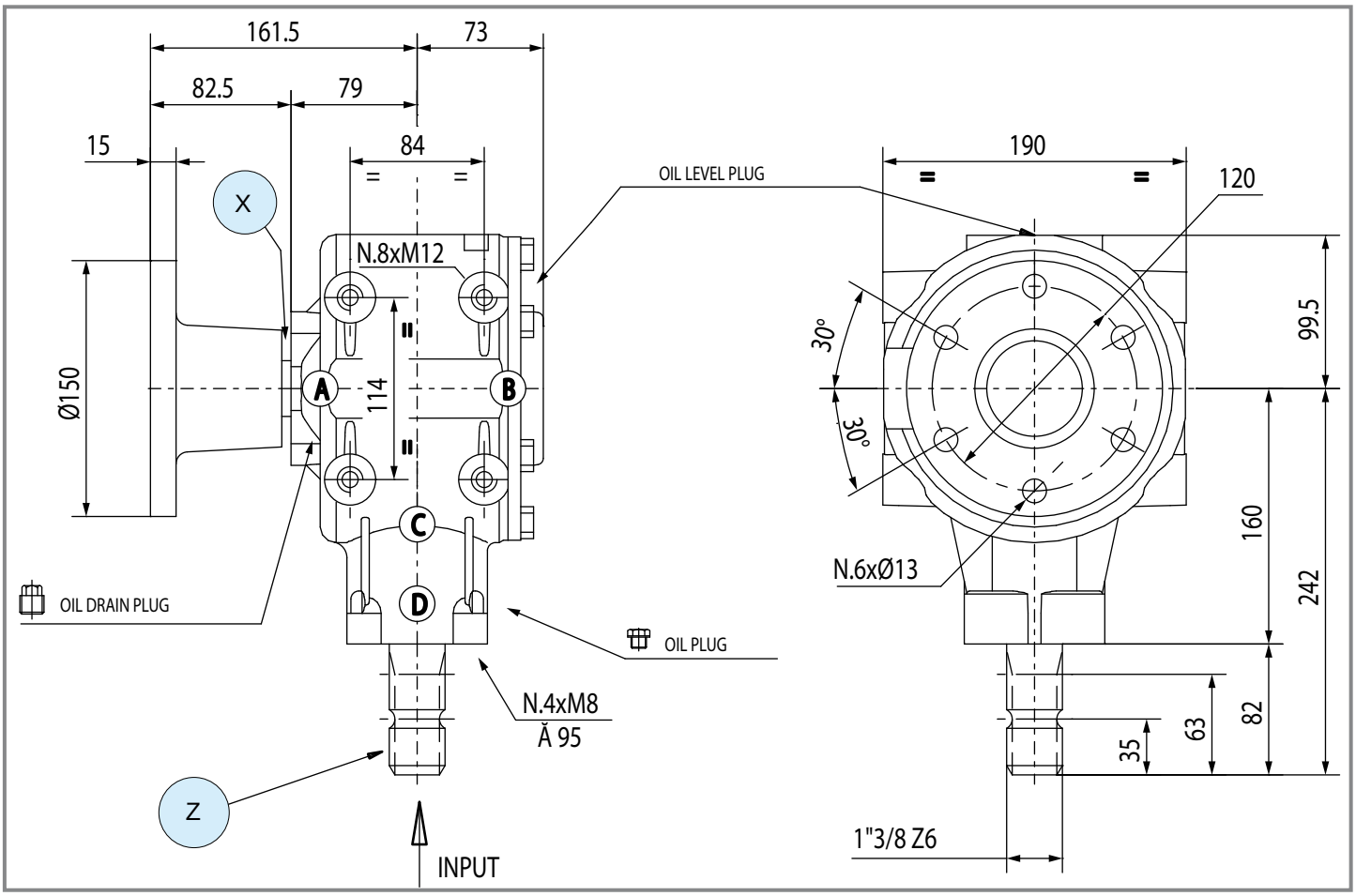

	i	N_1 [rpm]	P_1 [kW]	M_2 [Nm]	Shaft type X	Shaft type Y	Shaft type Z	Input	Code	Mounting	
R	3	540	18.4	947		-	1 1" 3/8 Z6	Z	9.304.027	3 4	std

comer industries

L-196J

Code **196.8**

(2.04)

[kg] 27.3 | [l] -

Per configurazioni non a catalogo contattare Servizio Tecnico-Commerciale
For non-catalog configurations contact Technical-Commercial Service

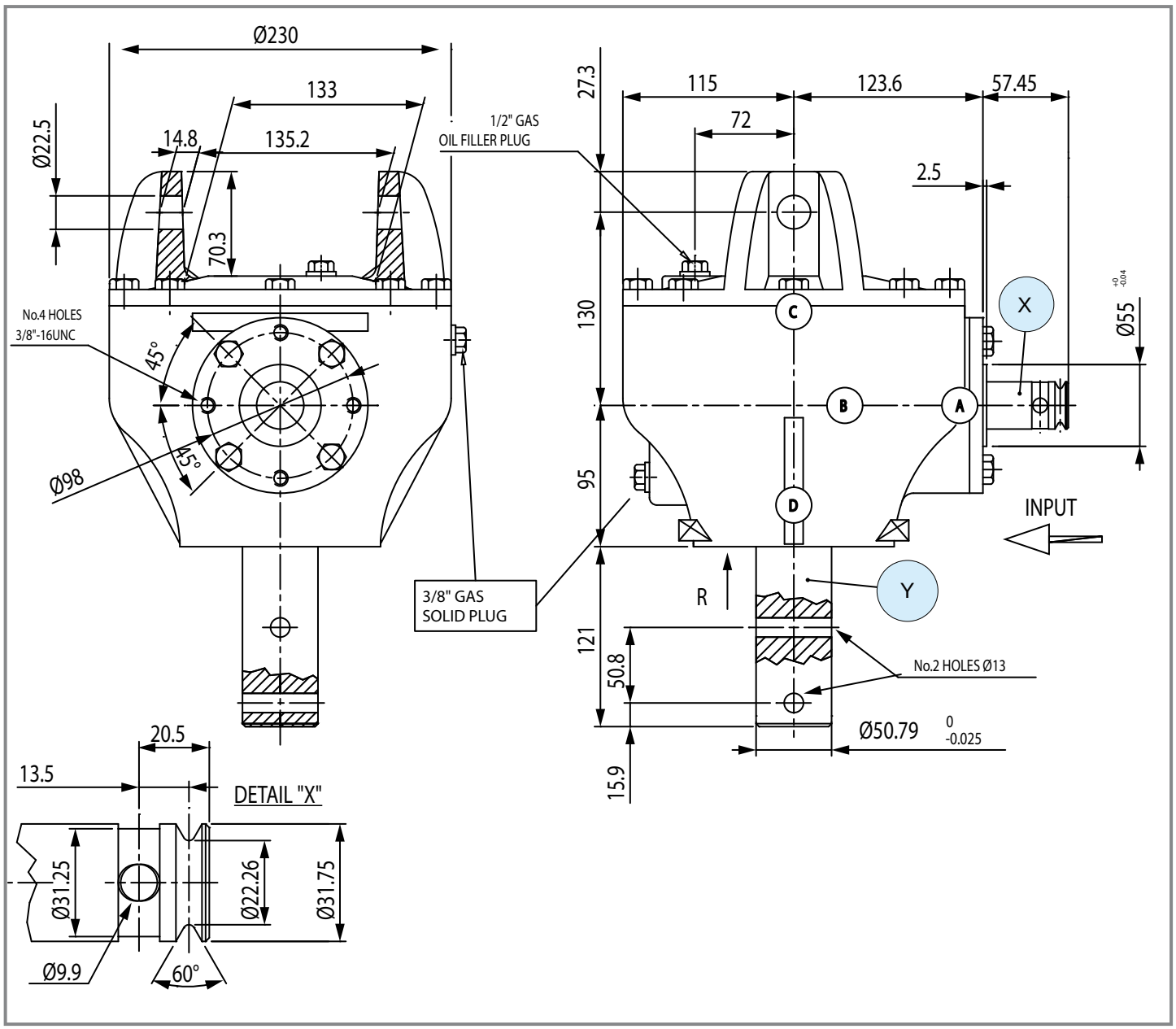

	i	N_1 [rpm]	P_1 [kW]	M_2 [Nm]	Shaft type X	Shaft type Y	Shaft type Z	Input	Code	Mounting	
R	**3.18**	540	18.4	1004	L 57 ø 31.75 n.1 ø9.9	L 121 ø 50.79 n.2 ø13 orthogonals	-	X	9.196.803	3 4	std

T-290F

Code **290**

(2.04)



[kg] 39 | [l] -

Per configurazioni non a catalogo contattare Servizio Tecnico-Commerciale
For non-catalog configurations contact Technical-Commercial Service

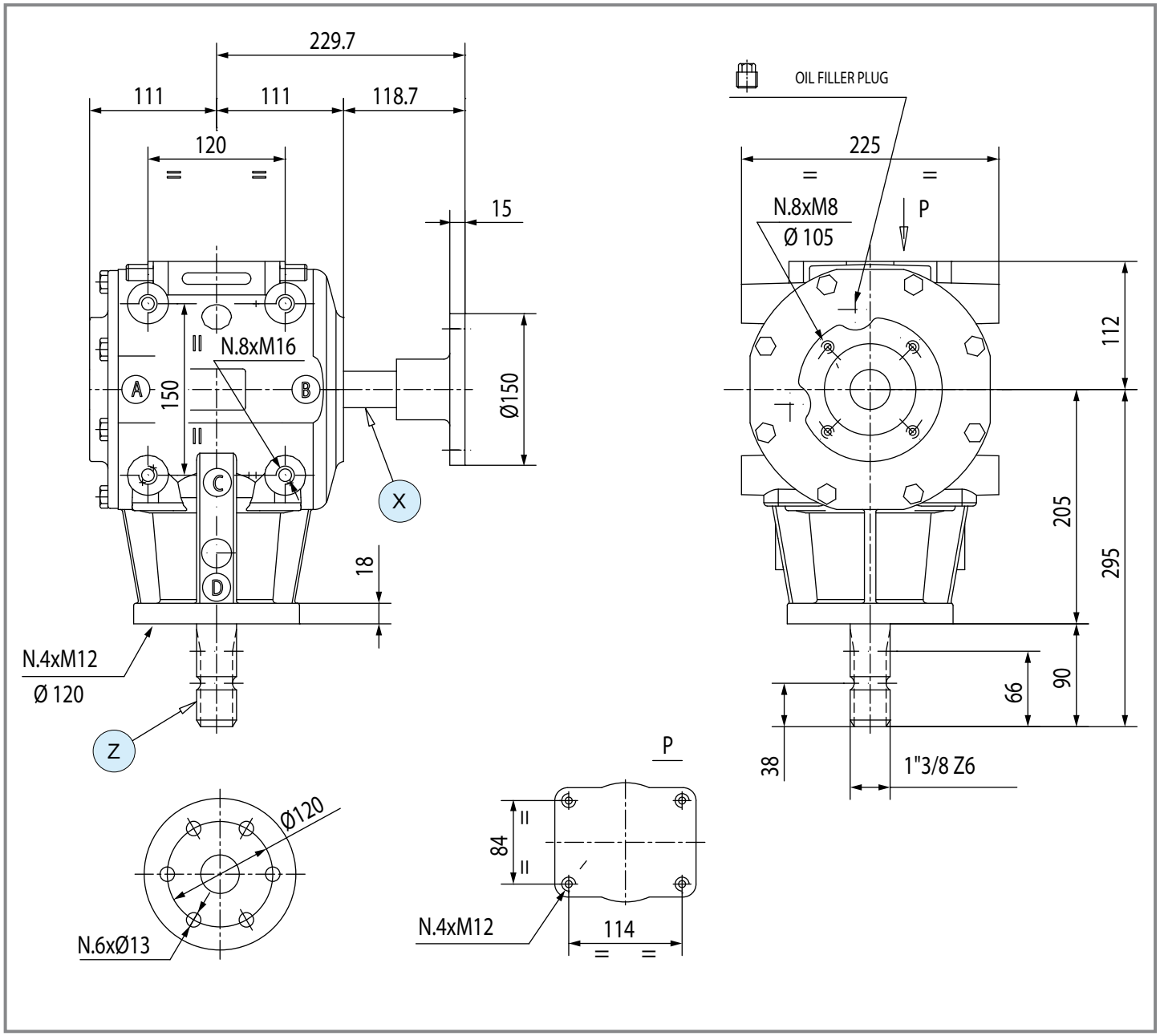

	i	N_1 [rpm]	P_1 [kW]	M_2 [Nm]	Shaft type X	Shaft type Y	Shaft type Z	Input	Code	Mounting	
R	3	540	26.5	1361		-	1 1" 3/8 Z6	Z	9.290.003	3 4	std

comer industries

T-22A

Code **794**

(2.04)



[kg] 29 | [l] 3.1

Per configurazioni non a catalogo contattare Servizio Tecnico-Commerciale
For non-catalog configurations contact Technical-Commercial Service

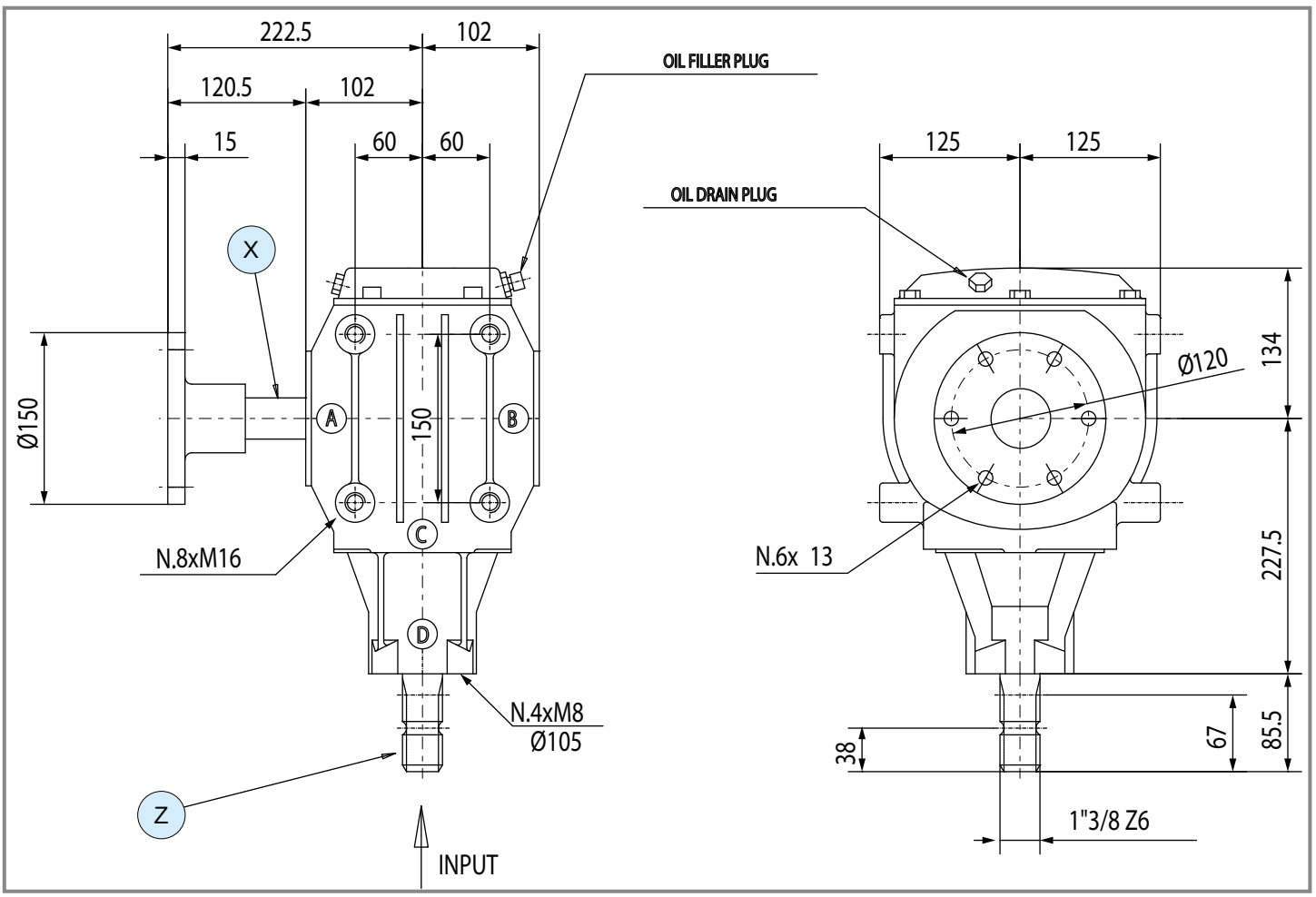

	i	N_1 [rpm]	P_1 [kW]	M_2 [Nm]	Shaft type X	Shaft type Y	Shaft type Z	Input	Code	Mounting	
R	3	540	33.1	1361		-	1 1" 3/8 Z6	Z	9.262.011	3 4	std

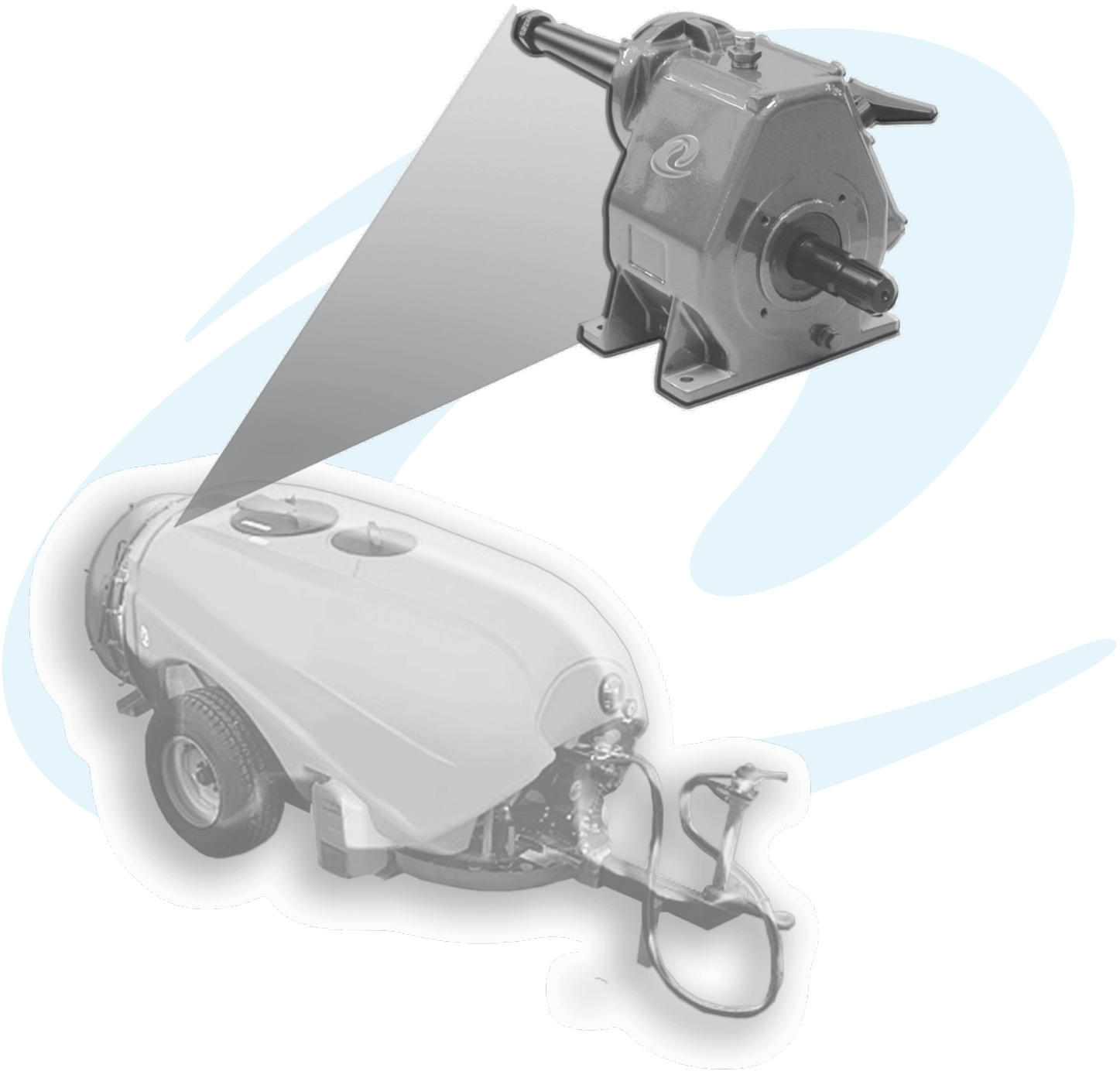

Per configurazioni non a catalogo contattare Servizio Tecnico-Commerciale
For non-catalog configurations contact Technical-Commercial Service

	i	$P_{1\text{ - max}}$ [kW]	$M_{2\text{ - max}}$ [Nm]	Tipologia alberi disponibili *Available type of shafts*	p.
D-7A	M 4.00÷5.82 - - R -	21.7	93		152
D-7B	M 4.00÷5.25 - - R -	21.7	95		153
D-27A	M 4.00÷5.25 - - R -	22.1	-		154
D-27J **D-27B**	M 3.69÷7.45 - - R -	22.1	-	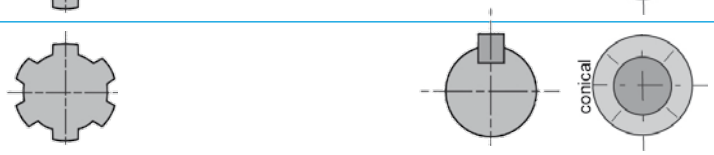	155
D-21A	M 3.60÷7.45 - - R -	47.8	-		156
D-21B **D-21F**	M 2.90÷4.90 - - R -	47.8	-		157
D-21A double output	M 3.60÷4.93 - - R -	40.5	-	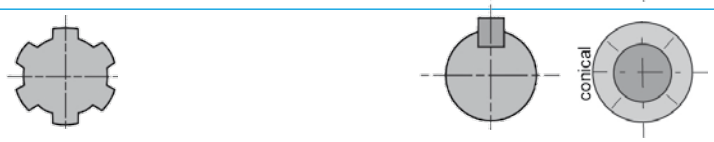	158

D-7A

Code **707**

(3.01)



[kg] 17 | [l] 0.9

Per configurazioni non a catalogo contattare Servizio Tecnico-Commerciale
For non-catalog configurations contact Technical-Commercial Service

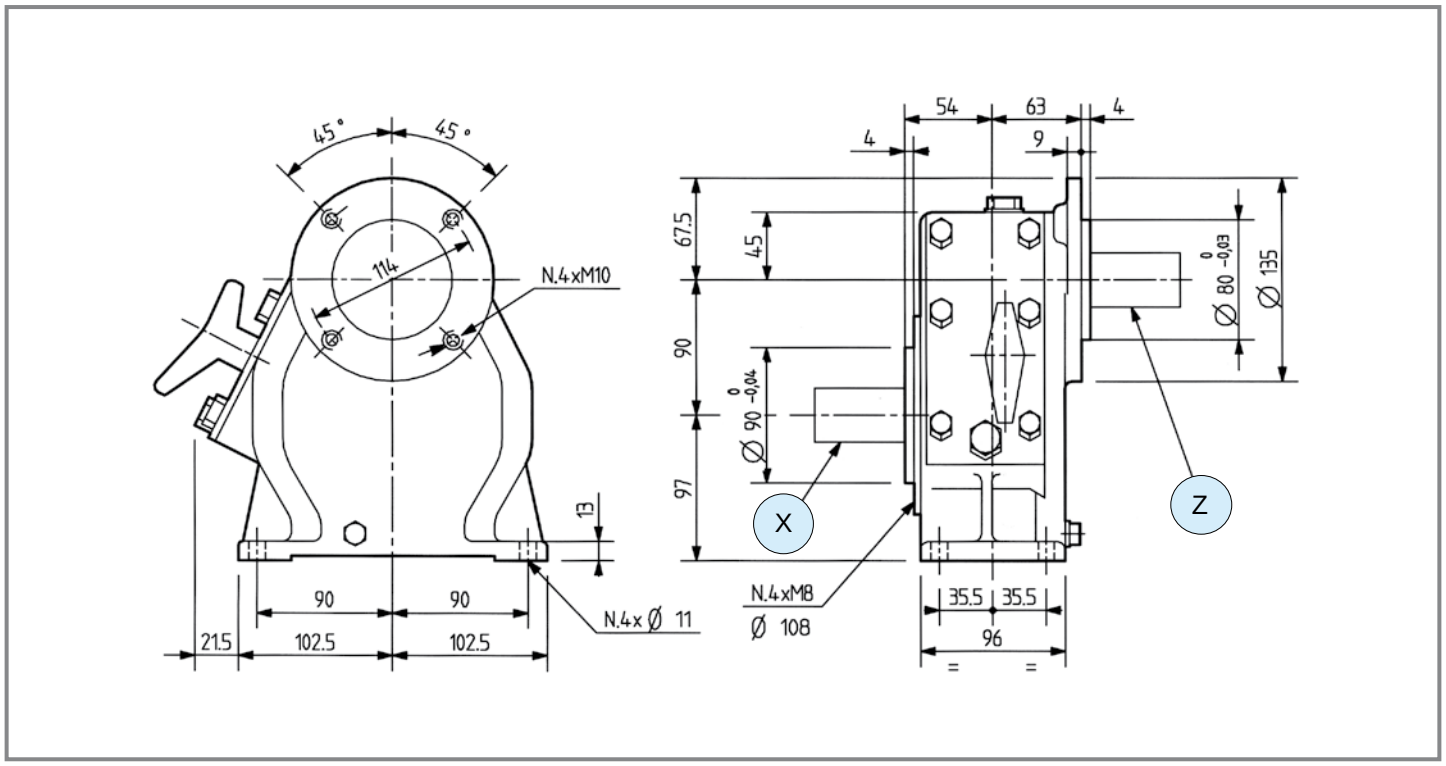

	i	N_1 [rpm]	P_1 [kW]	M_2 [Nm]	Shaft type X	Shaft type Y	Shaft type Z	Input	Features	Code	Mounting	
M ⇨ +	**5.82**	540	16.2	48	1 — 1" 3/8 Z6	-	54 — 35	X	-	9.707.354	209 210	std
	4.36	540	21.3	84	1 — 1" 3/8 Z6	-		X	-	-	209 210	special
	4.00	540	21.7	93	1 — 1" 3/8 Z6	-		X	-	-	209 210	special

comer industries

D-7B

Code **707**

(3.01)



[kg] 18 | [l] 1.0

Per configurazioni non a catalogo contattare Servizio Tecnico-Commerciale
For non-catalog configurations contact Technical-Commercial Service

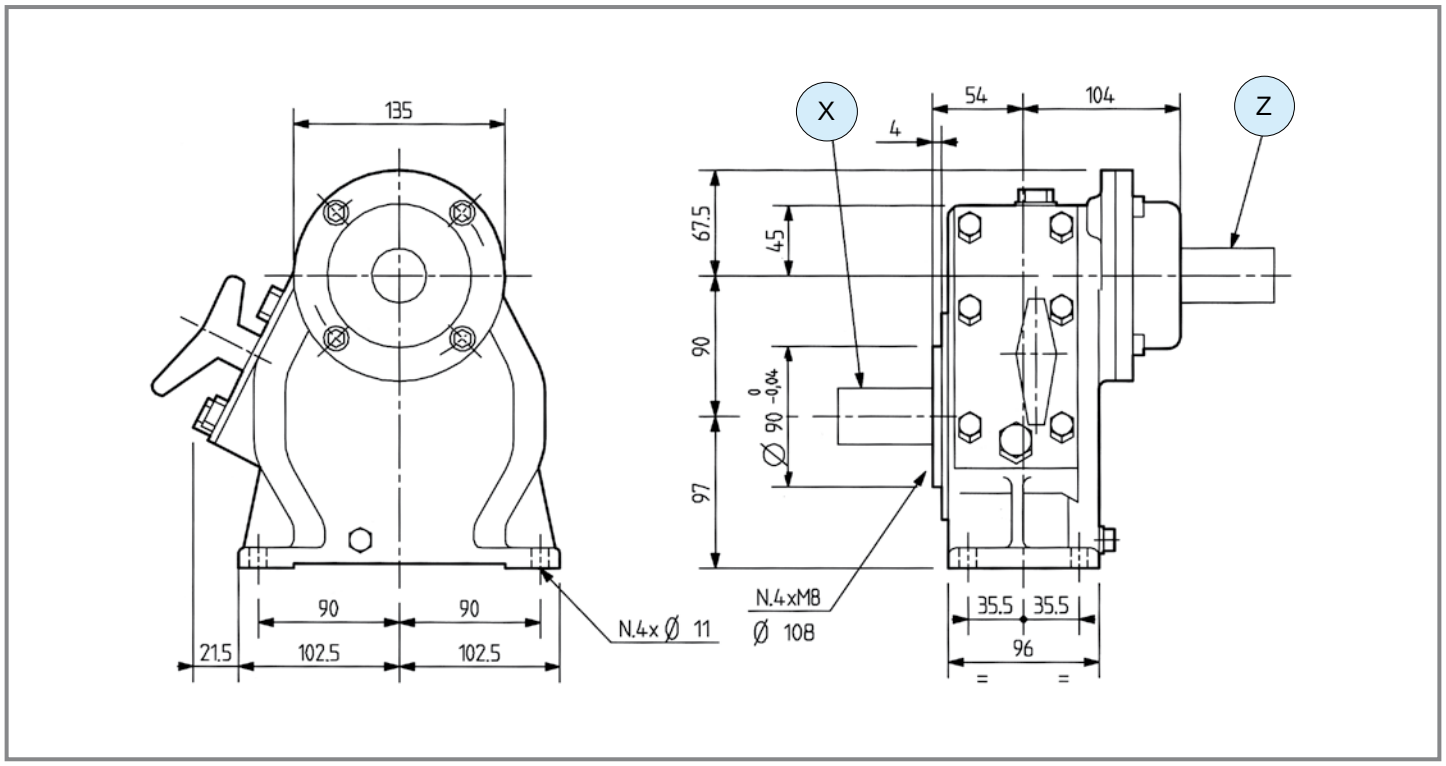

	i	N_1 [rpm]	P_1 [kW]	M_2 [Nm]	Shaft type X	Shaft type Y	Shaft type Z	Input	Features	Code	Mounting	
M ⇨ +	**5.25**	540	20.6	67	1  1" 3/8 Z6	-		X	-	-	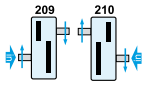	special
	4.36	540	21.3	83	1  1" 3/8 Z6	-		X	-	-	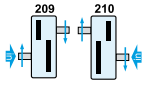	special
	4.00	540	21.7	95	1  1" 3/8 Z6	-	55  40	X	-	9.707.333	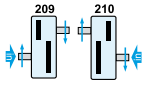	std

D-27A

Code **727**

(3.01)



[kg] 22.5 | [l] 1.3

Per configurazioni non a catalogo contattare Servizio Tecnico-Commerciale
For non-catalog configurations contact Technical-Commercial Service

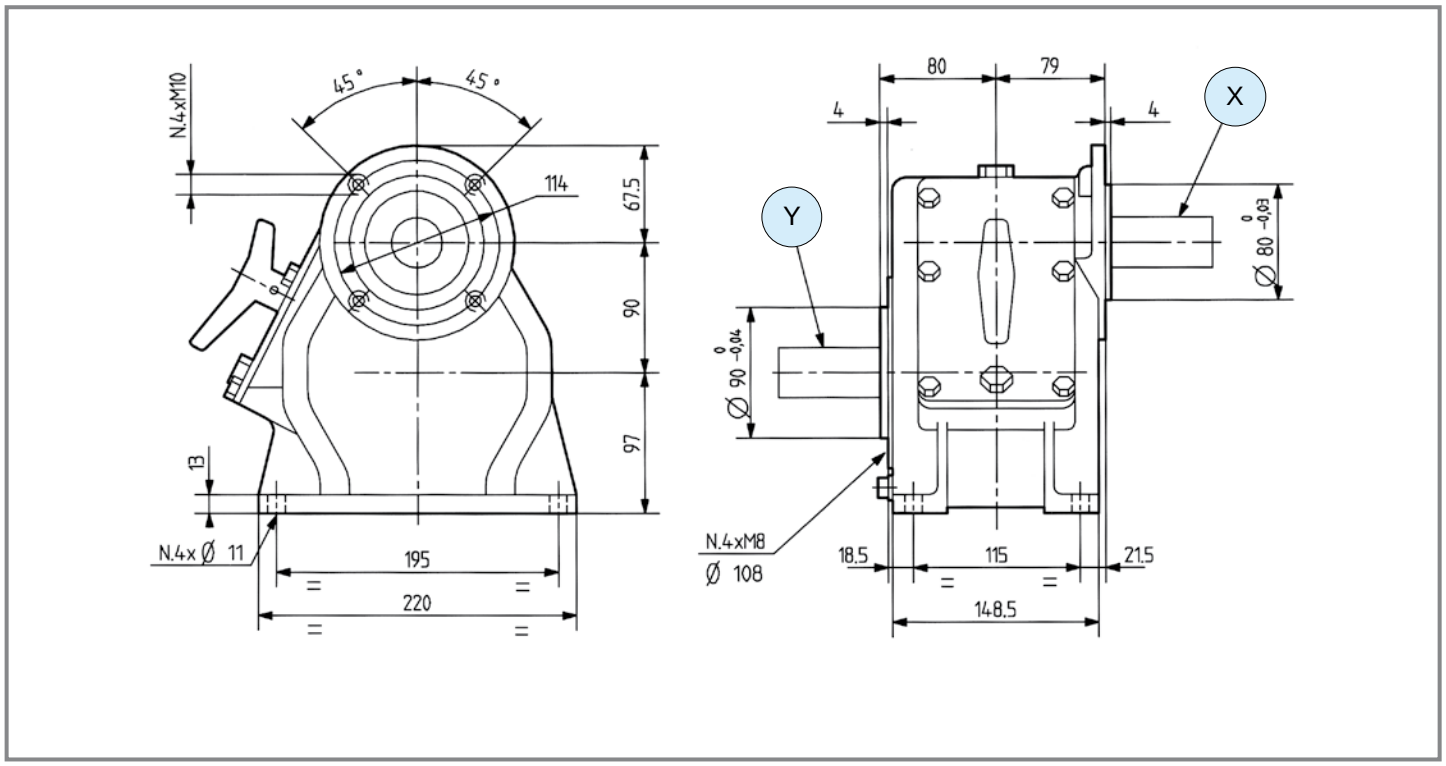

	i	N_1 [rpm]	P_1 [kW]	M_2 [Nm]	Shaft type X	Shaft type Y	Shaft type Z	Input	Features	Code	Mounting	
M	**4.00 5.25**	540	22.1		1 — 1" 3/8 Z6	-		X	-	-		special
M	**3.70 4.80**	540	22.1	-	1 — 1" 3/8 Z6	-	54 — L 250 — 28	X	-	9.727.336		std
M	**3.70 4.40**	540	22.1	-	1 — 1" 3/8 Z6	-	54 — L 117 — 28	X	-	9.727.319		std
M	**2.95 4.00**	540	22.1		1 — 1" 3/8 Z6	-		X	-	-		special

D-27J
Code **727.8**

D-27B
Code **727**

(3.01)



[kg]	25	[l]	1.3
[kg]	25	[l]	1.3

Per configurazioni non a catalogo contattare Servizio Tecnico-Commerciale
For non-catalog configurations contact Technical-Commercial Service

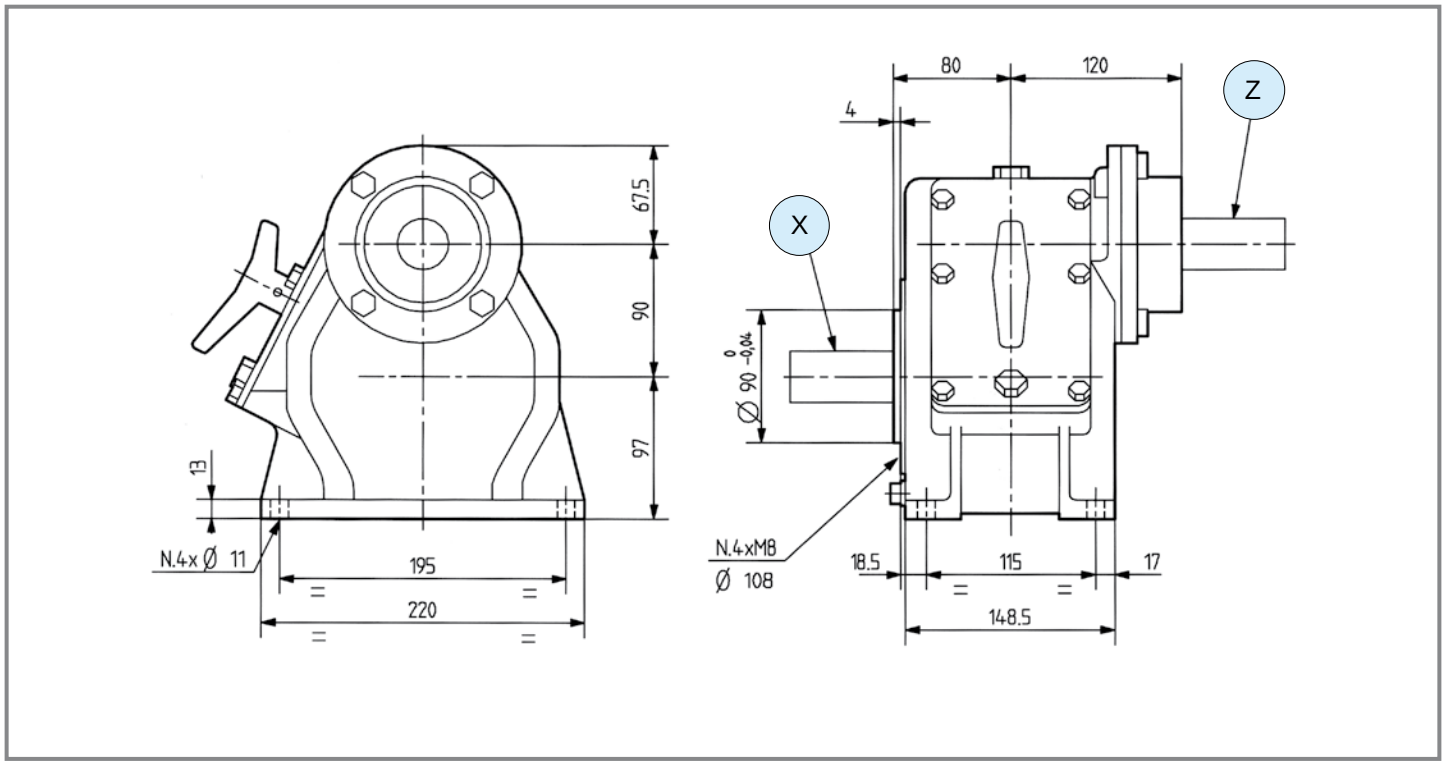

	i	N_1 [rpm]	P_1 [kW]	M_2 [Nm]	Shaft type X	Shaft type Y	Shaft type Z	Input	Features	Code	Mounting	
M	**4.00 5.25**	540	22.1	-	1 — 1" 3/8 Z6	-	18 — L 200 — ø 30	X	-	9.727.308	81 87	std
M	**3.69 4.36**	540	22.1	-	1 — 1" 3/8 Z6	-	55 — L 253 — 40	X	-	9.727.000	81 87	std
M	**2.95 4.00**	540	22.1	-	1 — 1" 3/8 Z6	-	55 — L 200 — 40	X	-	9.727.820	81 87	std
	2.95 4.00	540	22.1	-	1 — 1" 3/8 Z6	-	55 — L 250 — 40	X	-	9.727.881	81 87	std

D-21A

Code **721**

(3.01)



[kg] 31 | [l] 1.8

Per configurazioni non a catalogo contattare Servizio Tecnico-Commerciale
For non-catalog configurations contact Technical-Commercial Service

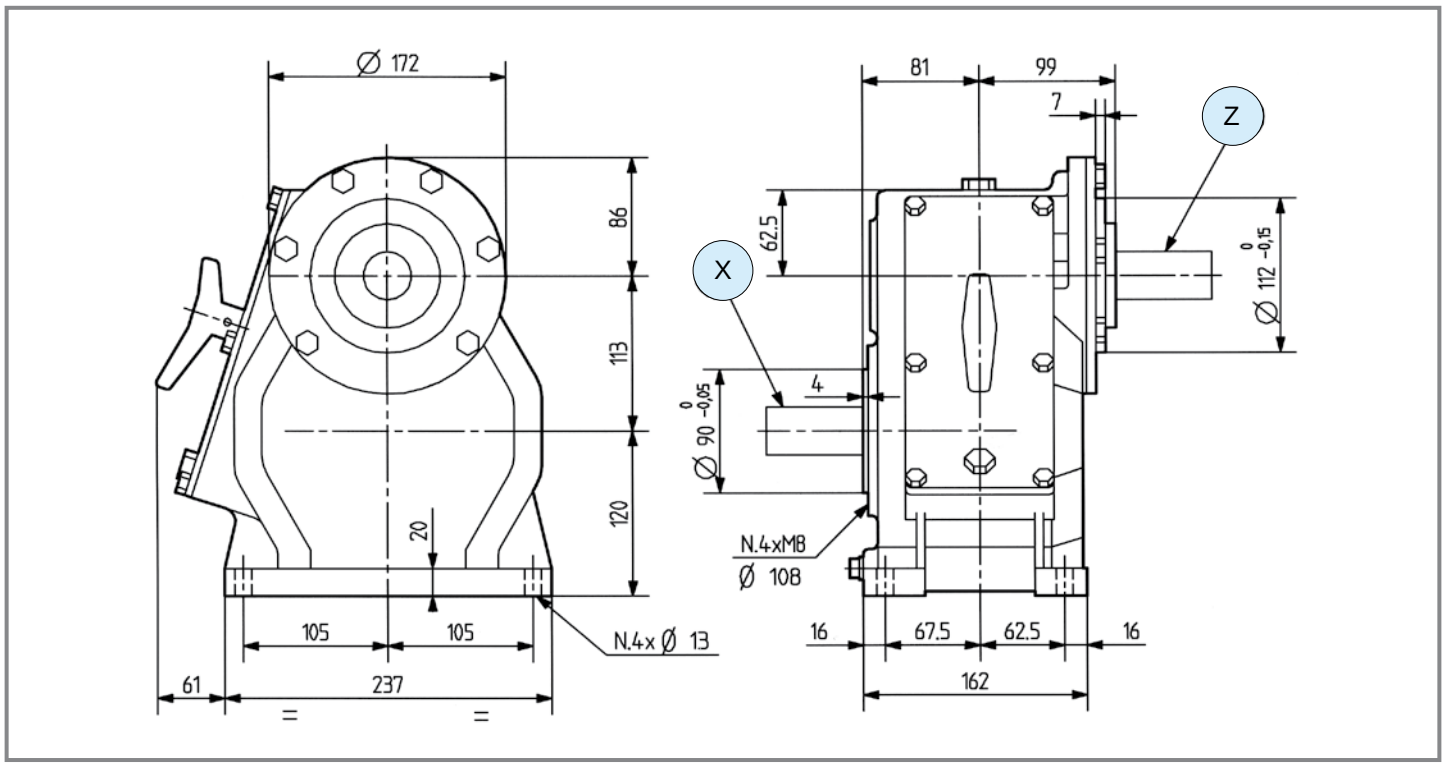

6 - Cambio facilitato / *Easy Shift*

	i	N_1 [rpm]	P_1 [kW]	M_2 [Nm]	Shaft type X	Shaft type Y	Shaft type Z	Input	Features	Code	Mounting	
M	**6.95 7.45**	540	26.5	-	1 — 1" 3/8 Z6	-	54 — L 108 — 35	X	-	9.721.395		std
	3.90 4.90	540	40.5	-	1 — 1" 3/8 Z6	-	54 — L 271.5 — 30	X	-	9.721.449		std
	3.60 4.50	540	40.5	-	1 — 1" 3/8 Z6	-	55 — L 273 — 40	X	-	9.721.329		std
	3.60 4.50	540	40.5	-	1 — 1" 3/8 Z6	-	54 — L 270 — 35	X	-	9.721.007		std
	3.60 4.50	540	47.8	-	1 — 1" 3/8 Z6	-	54 — L 100 — 35	X	6	9.721.485		std

comer industries

D-21B
Code **721**

D-21F
Code **721**

(3.01)



[kg]	31
[l]	-
[kg]	37
[l]	1.8

Per configurazioni non a catalogo contattare Servizio Tecnico-Commerciale
For non-catalog configurations contact Technical-Commercial Service

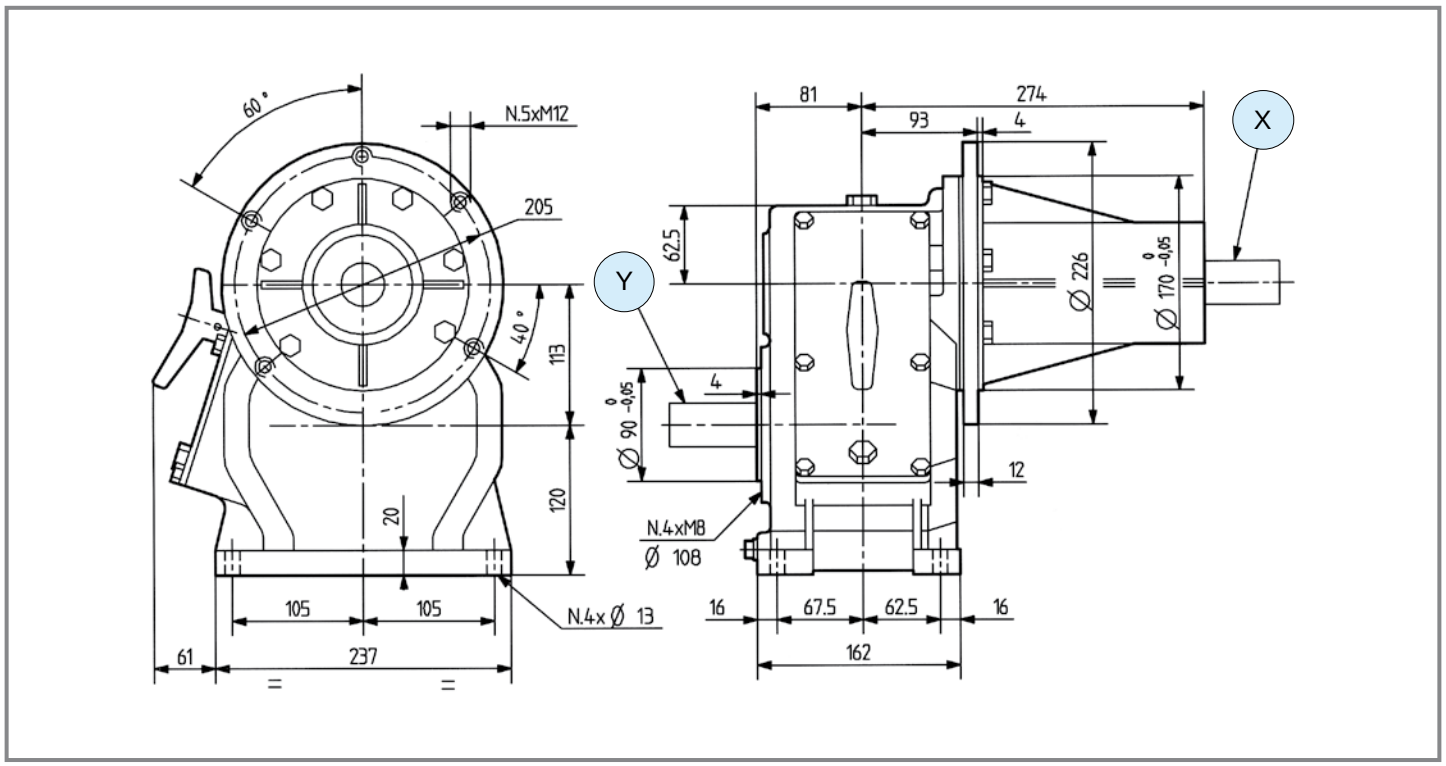

5 - Rinfozato / Reinforced *6 - Cambio facilitato / Easy Shift*

	i	N_1 [rpm]	P_1 [kW]	M_2 [Nm]	Shaft type X	Shaft type Y	Shaft type Z	Input	Features	Code	Mounting	
M	**3.90 4.90**	540	40.5	-	1 — 1" 3/8 Z6	-	54 — L 270 — 35	X	-	9.721.333	209 210	std
	3.60 4.50	540	40.5	-	1 — 1" 3/8 Z6	-	55 — L 165 — 40	X	-	9.721.413	209 210	std
	3.60 4.50	540	47.8	-	1 — 1" 3/8 Z6	-	55 — L 286 — 40	X	5	9.721.433	209 210	std
	2.90 3.90	540	40.5	-	1 — 1" 3/8 Z6	-	54 — L 221 — 35	X	6	9.721.483	209 210	std

D-21A

Code **721**

(3.01)



[kg] 31 | [l] 1.8

Per configurazioni non a catalogo contattare Servizio Tecnico-Commerciale
For non-catalog configurations contact Technical-Commercial Service

Doppia uscita controrotante.
Double output counter rotating.

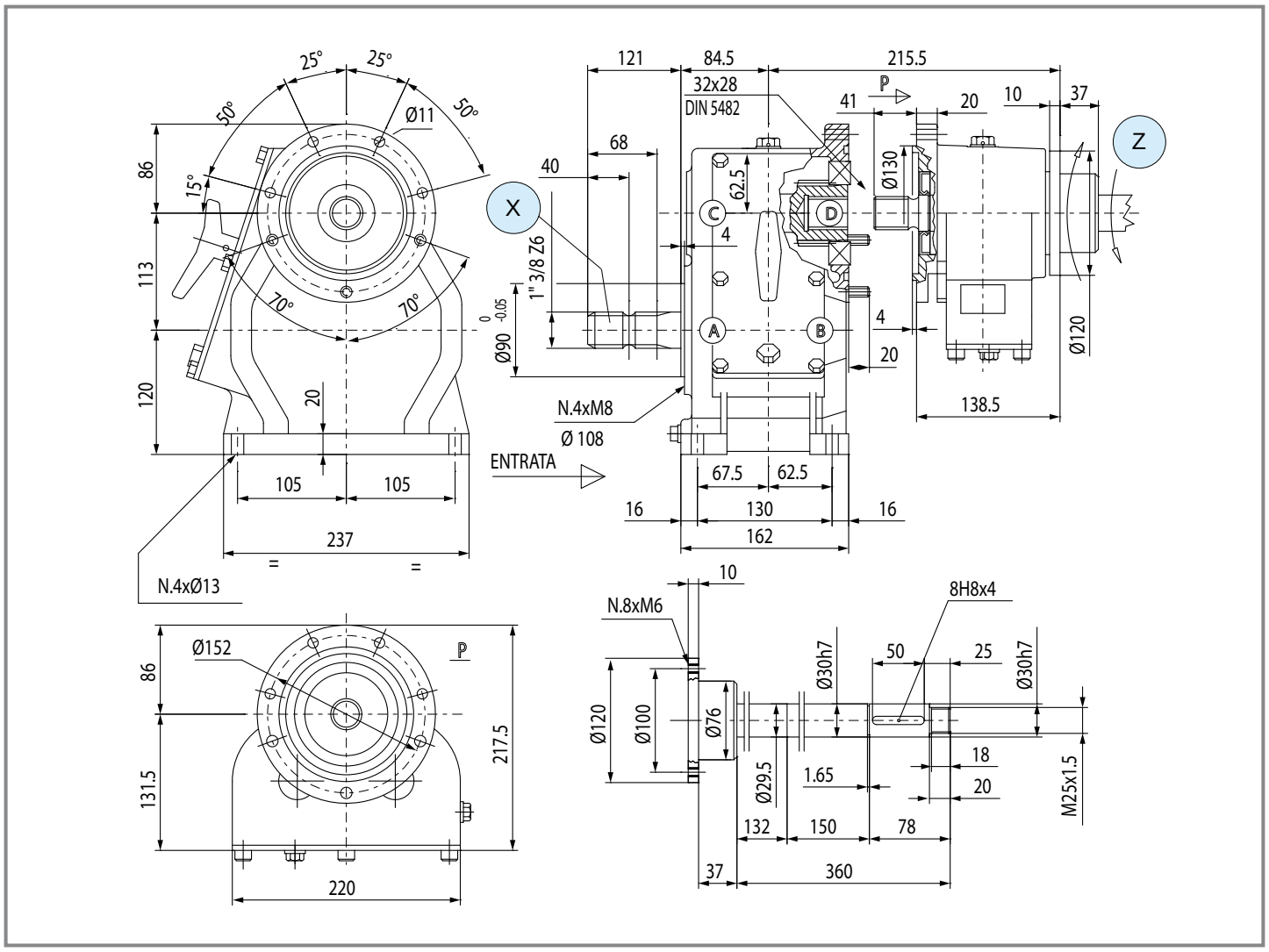

	i	N_1 [rpm]	P_1 [kW]	M_2 [Nm]	Shaft type X	Shaft type Y	Shaft type Z	Input	Features	Code	Mounting	
M	**3.60** **4.93**	540	40.5	-	1 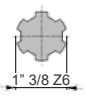	-	54  12 	X	-	9.721.516 + 9.773.005	-	std

comer industries

Questa pagina è lasciata intenzionalmente bianca
This page is intentionally left blank

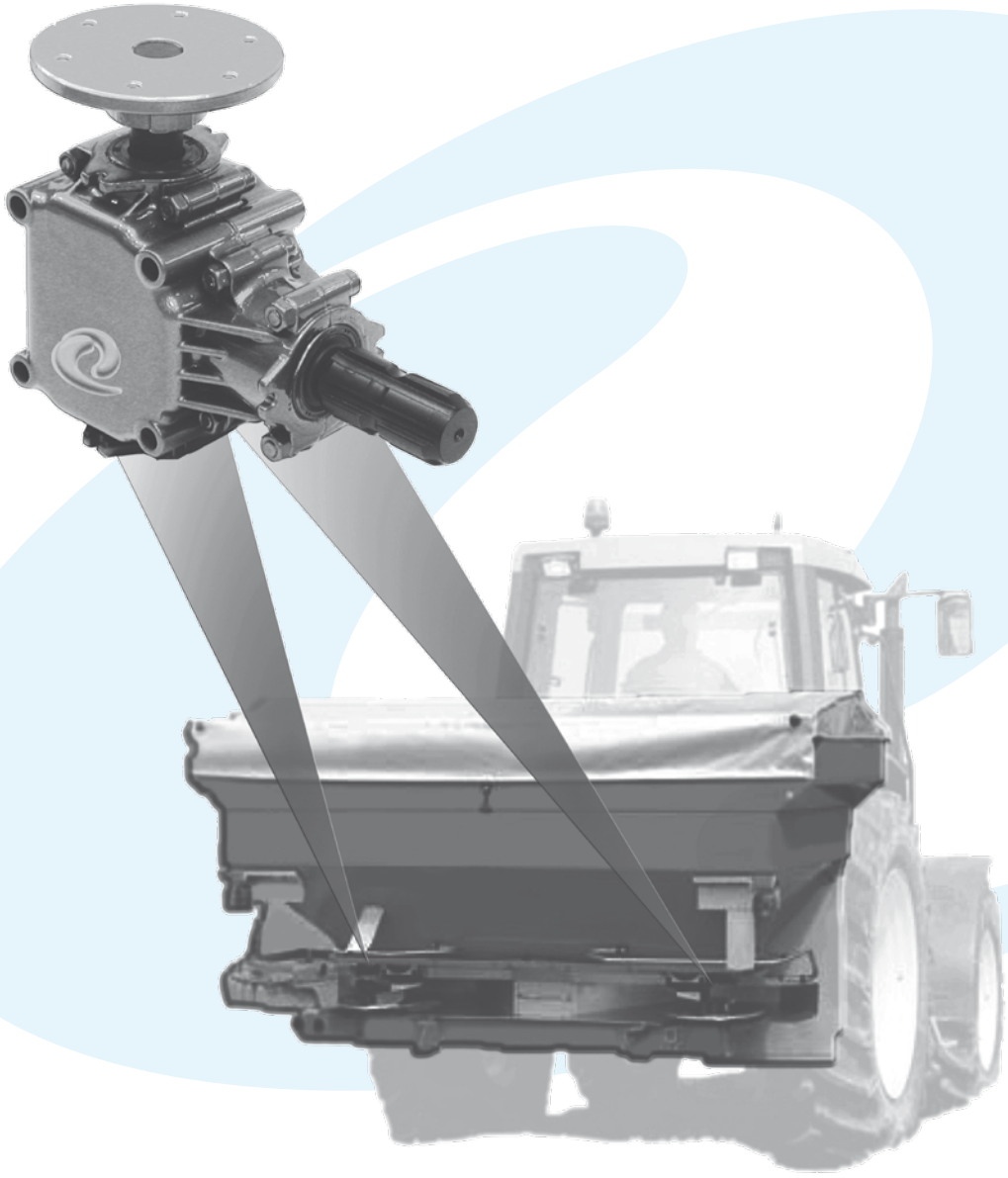

Per configurazioni non a catalogo contattare Servizio Tecnico-Commerciale
For non-catalog configurations contact Technical-Commercial Service

	i	$P_{1\text{ - max}}$ [kW]	$M_{2\text{ - max}}$ [Nm]	Tipologia alberi disponibili *Available type of shafts*	p.
L-150J	M -	8.0	140	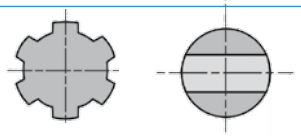	162
	- 1.00				
	R -				
L-150C	M 1.35	9.9	126	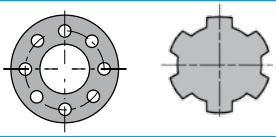	163
	- -				
	R -				
L-25C	M 1.35	9.9	126	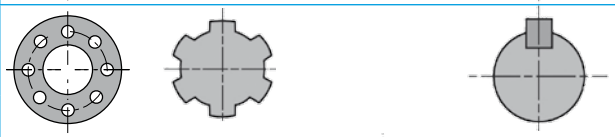	164
	- -				
	R -				
L-25J	M 1.35	11.0	189	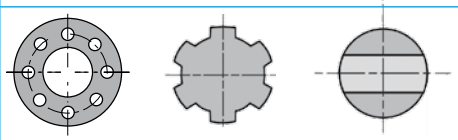	165
	- 1.00				
	R -				

L-150J

Code **150.8**

(3.02)



[kg] 3.5 | [kg] 0.2

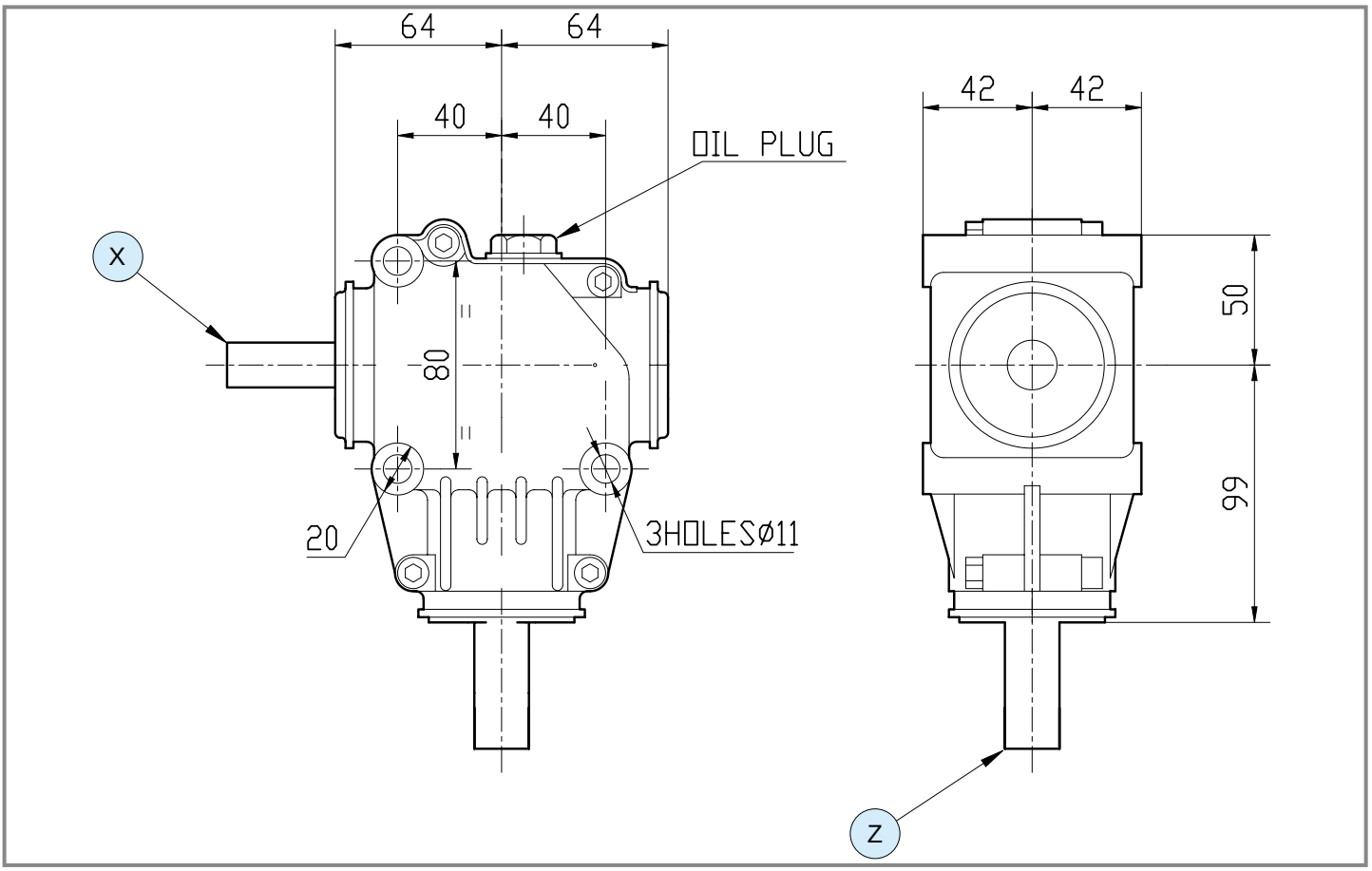

	i	N_1 [rpm]	P_1 [kW]	M_2 [Nm]	Shaft type X	Shaft type Y	Shaft type Z	Input	Lenght	Code	Mounting	
-	**1**	540	8	140	13 	-	1 	Z	-	9.150.800	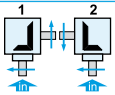	std

comer industries

L-150C

Code **150**

(3.02)

[kg] 15 | [kg] 0.2x3

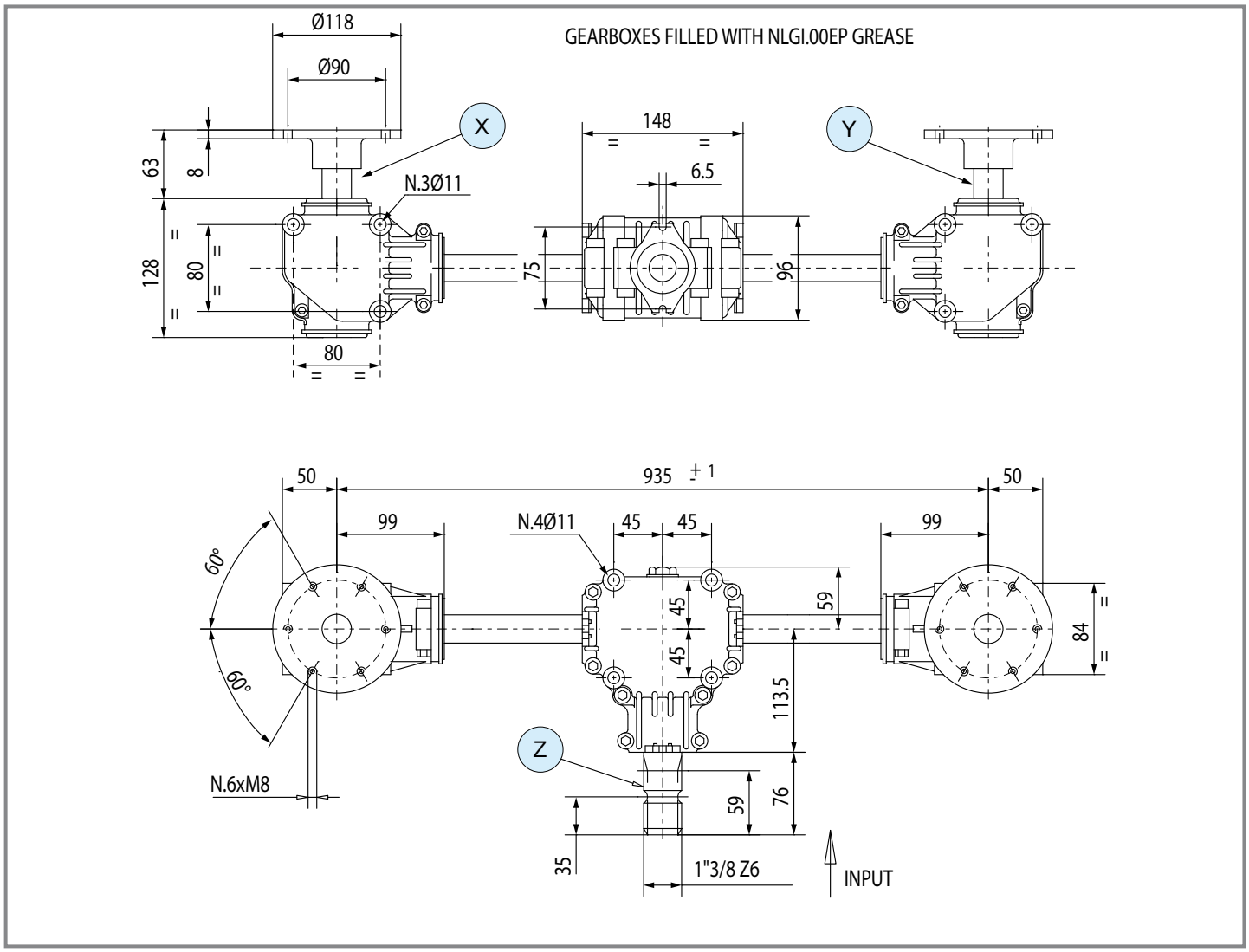

	i	N_1 [rpm]	P_1 [kW]	M_2 [Nm]	Shaft type X	Shaft type Y	Shaft type Z	Input	Lenght	Code	Mounting	
M	**1.35**	540	9.9	126			[1] 1" 3/8 Z6	Z	935	9.150.013	223	std

L-25C

Code **124**

(3.02)

[kg] 17 | [kg] 0.35x3

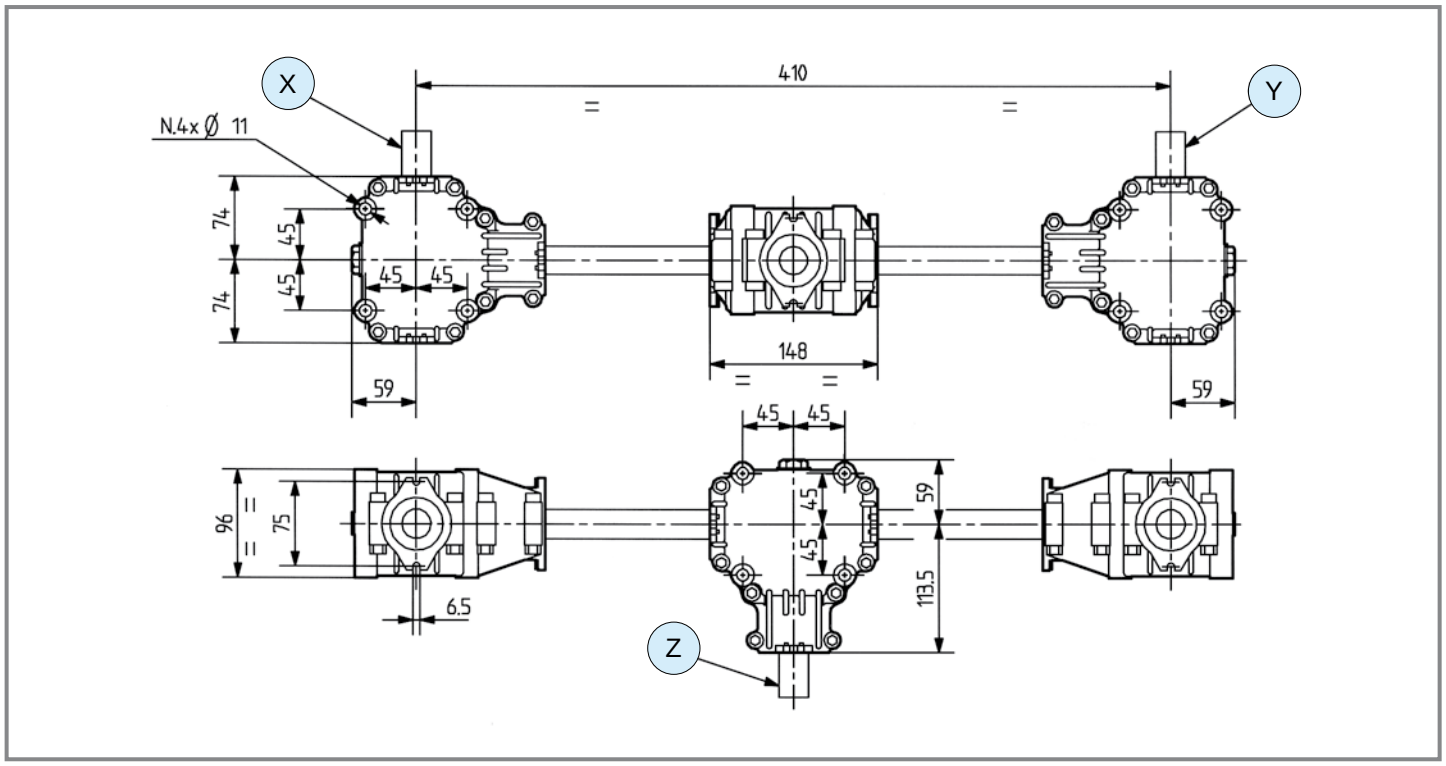

	i	N_1 [rpm]	P_1 [kW]	M_2 [Nm]	Shaft type X	Shaft type Y	Shaft type Z	Input	Lenght	Code	Mounting	
M	**1.35**	540	9.9	126	12 L 166 ø 25	12 L 166 ø 25	1 1" 3/8 Z6	Z	410	9.124.369	223	std
	1.35	540	9.9	126			1 1" 3/8 Z6	Z	410	9.124.326	223	std

L-25J

Code **124.8**

(3.02)



[kg] 4.1 | [l] 0.35

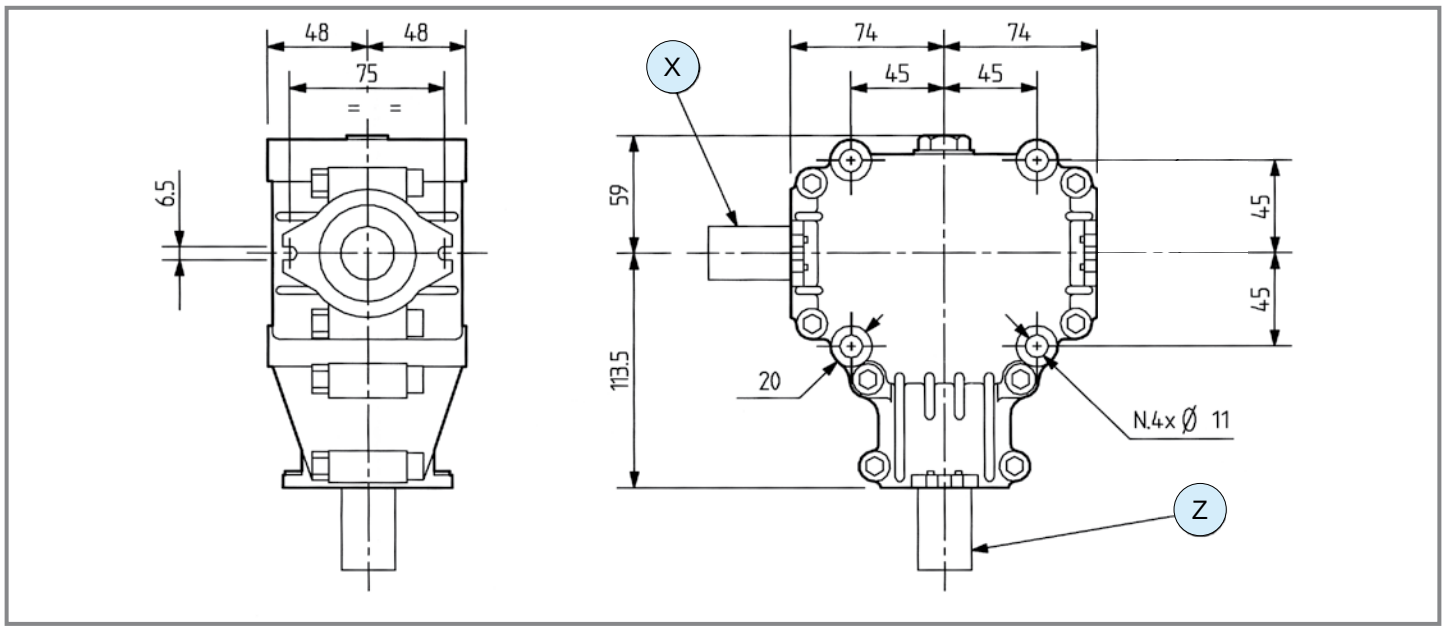

	i	N_1 [rpm]	P_1 [kW]	M_2 [Nm]	Shaft type X	Shaft type Y	Shaft type Z	Input	Lenght	Code	Mounting	
M	**1.35**	540	9.9	126	13 ø 25 n.2 ø8	-	1 1" 3/8 Z6	X	-	9.124.880	21 22	std
	1	540	11	189	13 L 165 ø 25 n.2 ø8	-	1 1" 3/8 Z6	X	-	9.124.870	1 2	std
-	1	540	11	189		-	1 1" 3/8 Z6	Z	-	9.124.803	1 2	std
	1	540	11	189	13 L 70 ø 25 n.2 ø8	-	1 1" 3/8 Z6	X	-	9.124.800	1 2	std

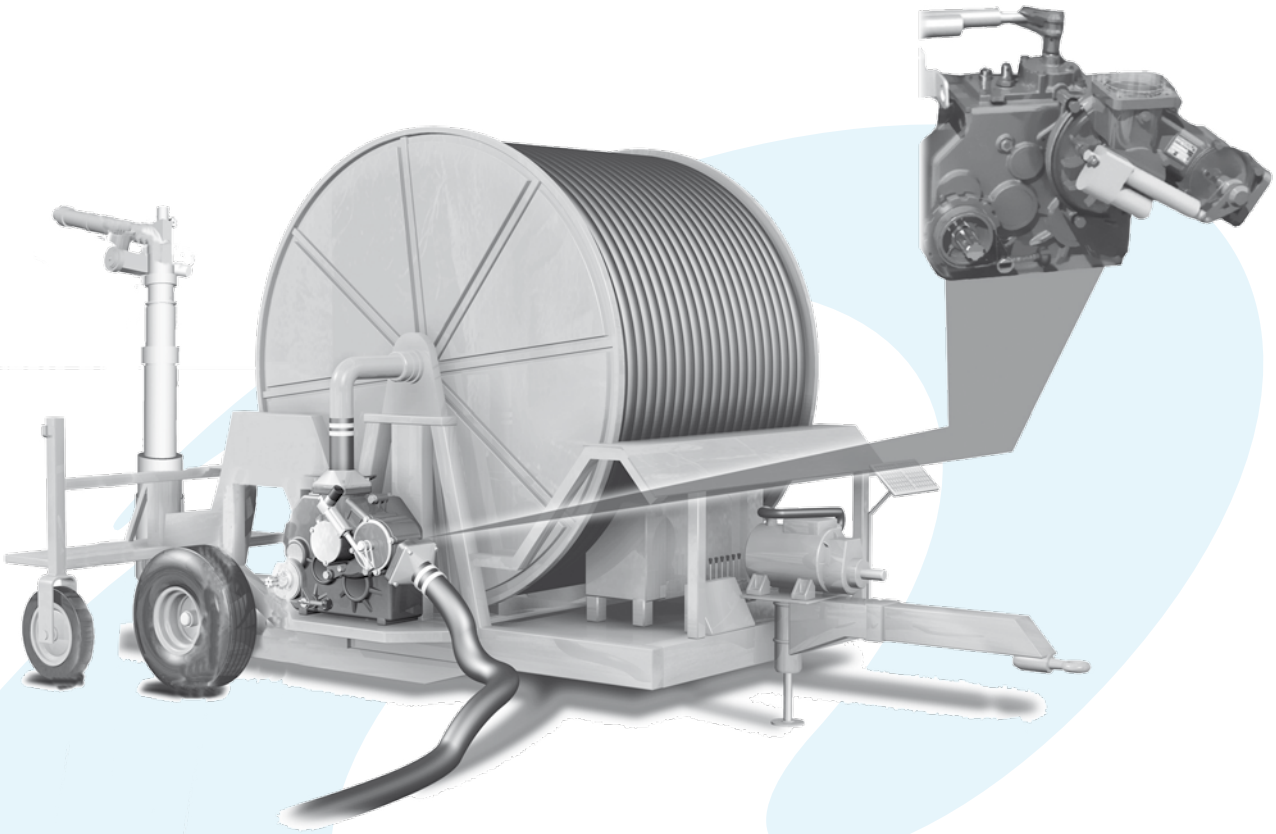

(3.03) Pompe centrifughe per irrigazione / *Centrifugal pumps for irrigations*

(3.04) Irrigatori a bobina / *Irrigations reels*

Per configurazioni non a catalogo contattare Servizio Tecnico-Commerciale
For non-catalog configurations contact Technical-Commercial Service

	i	$P_{1\text{ - max}}$ [kW]	$M_{2\text{ - max}}$ [Nm]	Tipologia alberi disponibili *Available type of shafts*	p.
A-4A	M 5.00÷6.20 - - R -	55.2	189	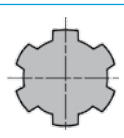 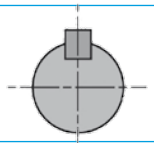	168
A-629A	M 1.77÷3.80 - - R -	130	680	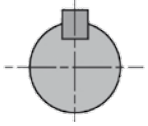 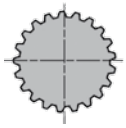	169
D-741A	M - - - R 1.6	-	50	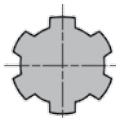 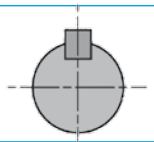	170
D-743A	M - - - R 97÷631	-	250	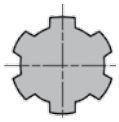 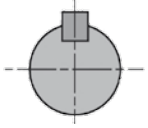	171
D-745A	M - - - R 117÷766	-	700	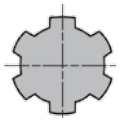 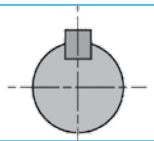	172
DTU-745A	M - - - R 117÷766	-	700	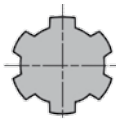 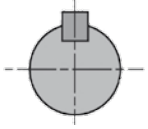	173
D-744A	M - - - R 119÷781	-	1100	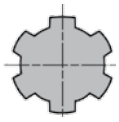 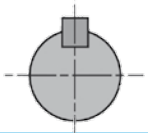	174
DTU-744A	M - - - R 120÷781	-	1100	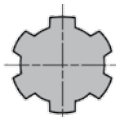 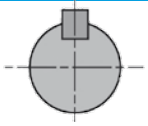	175
D-742A	M - - - R 115÷756	-	2100	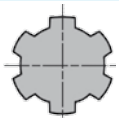 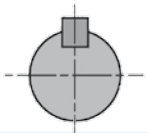	176
DTU-742A	M - - - R 116÷756	-	2100	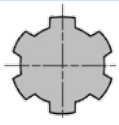 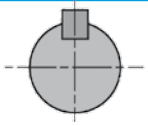	177

A-4A

Code **603**

(3.03)



[kg] 41 | [l] 1.0

Per configurazioni non a catalogo contattare Servizio Tecnico-Commerciale
For non-catalog configurations contact Technical-Commercial Service

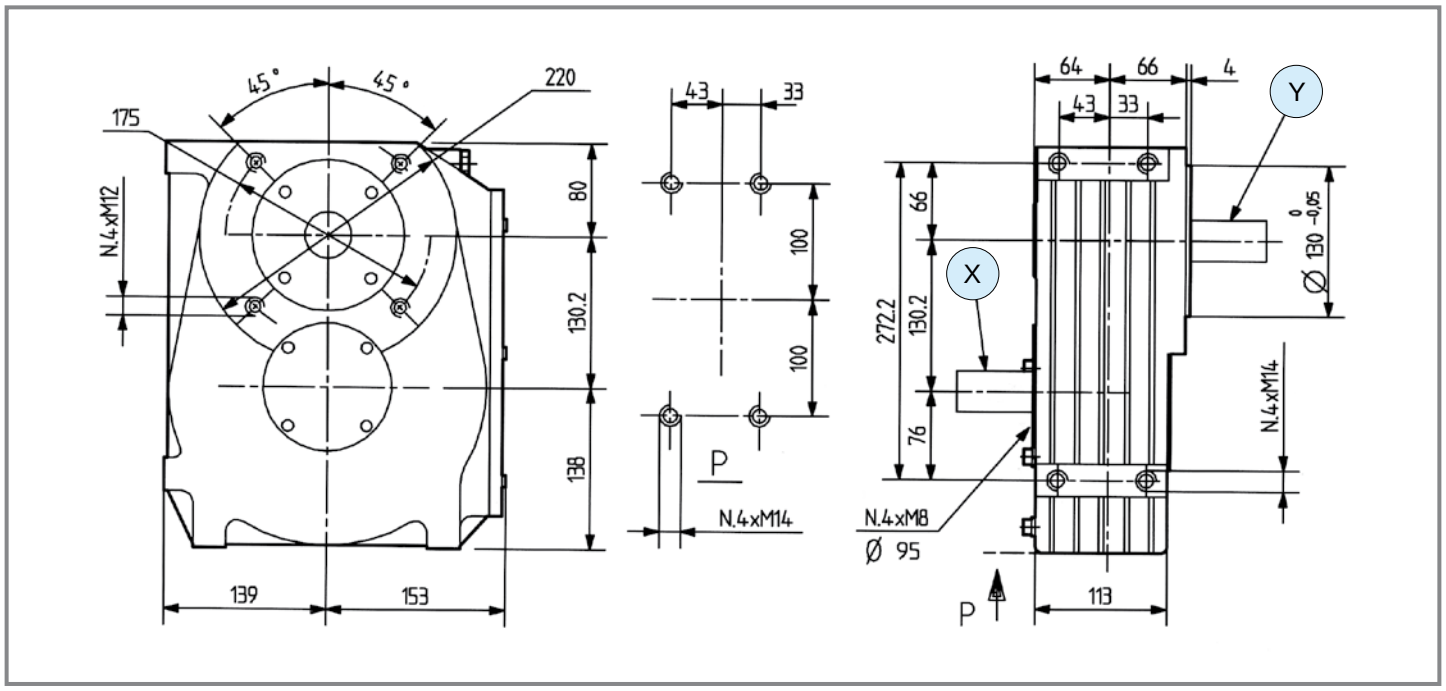

	i	N_1 [rpm]	P_1 [kW]	M_2 [Nm]	Shaft type X	Shaft type Y	Shaft type Z	Input	Option	Code	Mounting	
M → +	**6.20**	540	51.2	142	1 — 1" 3/8 Z6	3 — L 91 — ø 35	-	X	-	9.603.005	41 / 42	std
	5.00	540	55.2	189	1 — 1" 3/8 Z6	3 — L 91 — ø 35	-	X	-	9.603.000	41 / 42	std

A-629A

Code **629**

(3.03)

[kg] 71.3 | [l] -

Per configurazioni non a catalogo contattare Servizio Tecnico-Commerciale
For non-catalog configurations contact Technical-Commercial Service

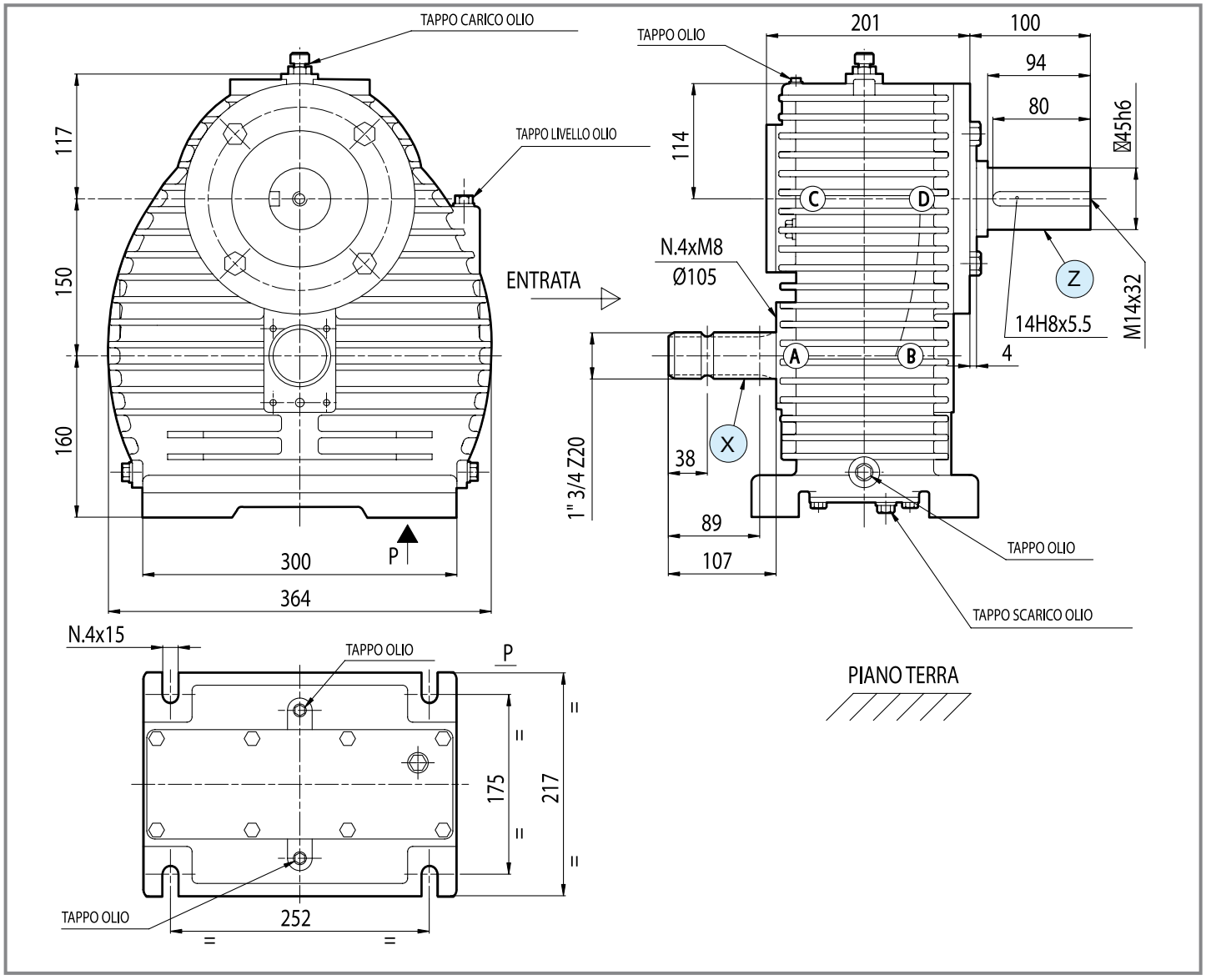

	i	N_1 [rpm]	P_1 [kW]	M_2 [Nm]	Shaft type X	Shaft type Y	Shaft type Z	Input	Option	Code	Mounting	
M	**3.80**	540	110	497	6 — 1" 3/4 Z20	-	21 — L 94 — ø 45	X	-	9.629.302	41 42	std
	1.77	1000	130	680	6 — 1" 3/4 Z20	-	43 — L 60 — ø 65	X	-	9.629.304	41 42	std

D-741A

Code **741**

(3.04)

[kg] 10 | [l] -

Per configurazioni non a catalogo contattare Servizio Tecnico-Commerciale
For non-catalog configurations contact Technical-Commercial Service

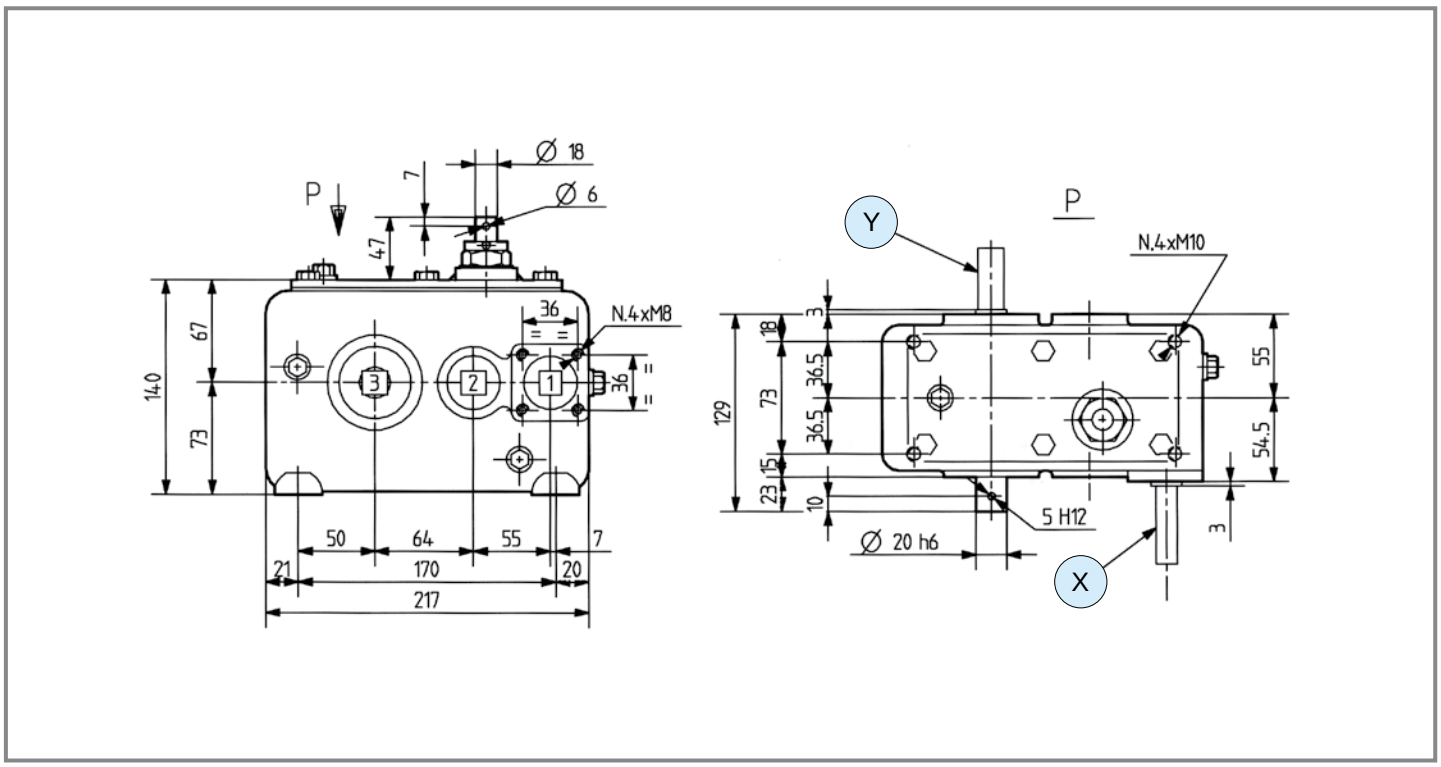

	i	M_2 [Nm]	Shaft type X	Shaft type Y	(i) P.T.O.	P.T.O.	Input	Option	Pin (on/off)	Code	Mounting	
R	**1.6**	50	45 L 54 ø 14	44 L 40 ø 18	1:1	1 1" 3/8 Z6	X	-	-	9.741.000	K	std

comer industries

D-743A

Code **743**

(3.04)

[kg] 29.5 | [l] -

Per configurazioni non a catalogo contattare Servizio Tecnico-Commerciale
For non-catalog configurations contact Technical-Commercial Service

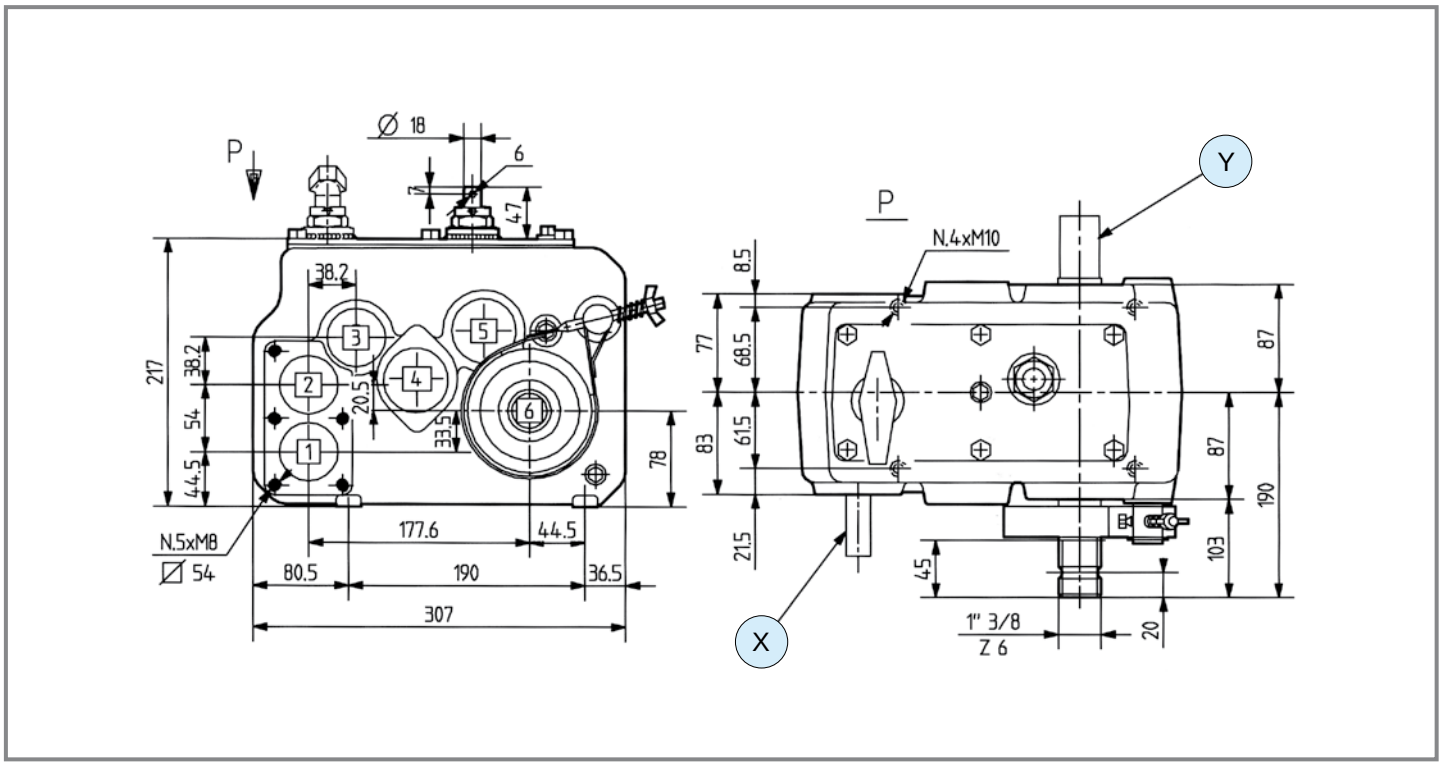

	i	M_2 [Nm]	Shaft type X	Shaft type Y	(i) P.T.O.	P.T.O.	Input	Option	Pin (on/off)	Code	Mounting	
R	**97 201 291 631**	250	45 L 54 ø 14	44 L 40 ø 18	1:1	1 1" 3/8 Z6	X	-	-	9.743.008	J P.T.O.	std
	97 201	250	45 L 54 ø 14	44 L 40 ø 18	1:1	1 1" 3/8 Z6	X	-	-	9.743.015	J P.T.O.	std

D-745A

Code **745**

(3.04)

[kg] 38.5 | [l] -

Per configurazioni non a catalogo contattare Servizio Tecnico-Commerciale
For non-catalog configurations contact Technical-Commercial Service

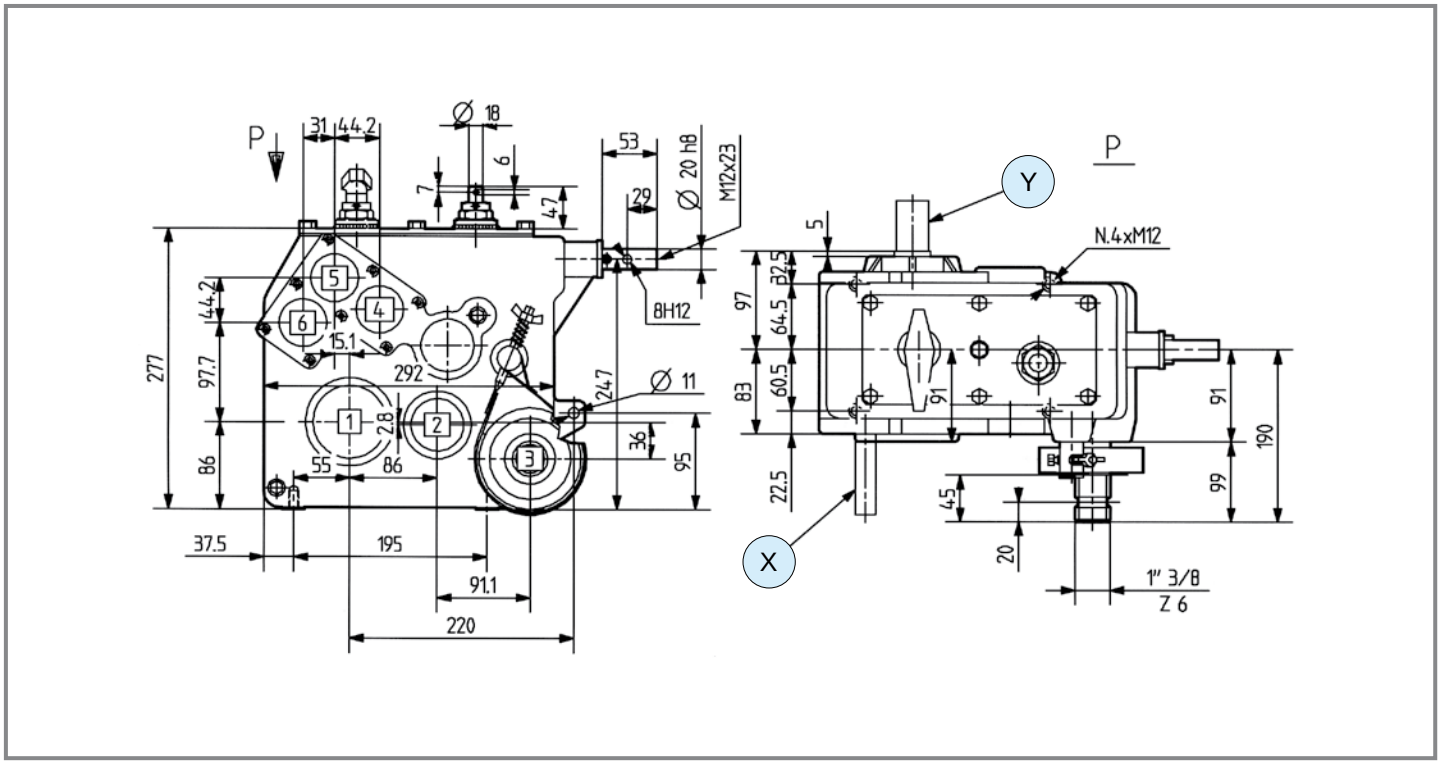

	i	M_2 [Nm]	Shaft type X	Shaft type Y	(i) P.T.O.	P.T.O.	Input	Option	Pin (on/off)	Code	Mounting	
R	118 244 353 766	700	46 L 80 ø 19	47 L 55 ø 32	11:1	1 1" 3/8 Z6	X	-	V	9.745.000	W P.T.O. IN	std
R	117 254	700	46 L 80 ø 19	47 L 55 ø 32	11:1	1 1" 3/8 Z6	X	-	V	9.745.021	W P.T.O. IN antiorario ccw	std

DTU-745A

Code **745**

(3.04)

[kg] 61.2 | [l] -

Per configurazioni non a catalogo contattare Servizio Tecnico-Commerciale
For non-catalog configurations contact Technical-Commercial Service

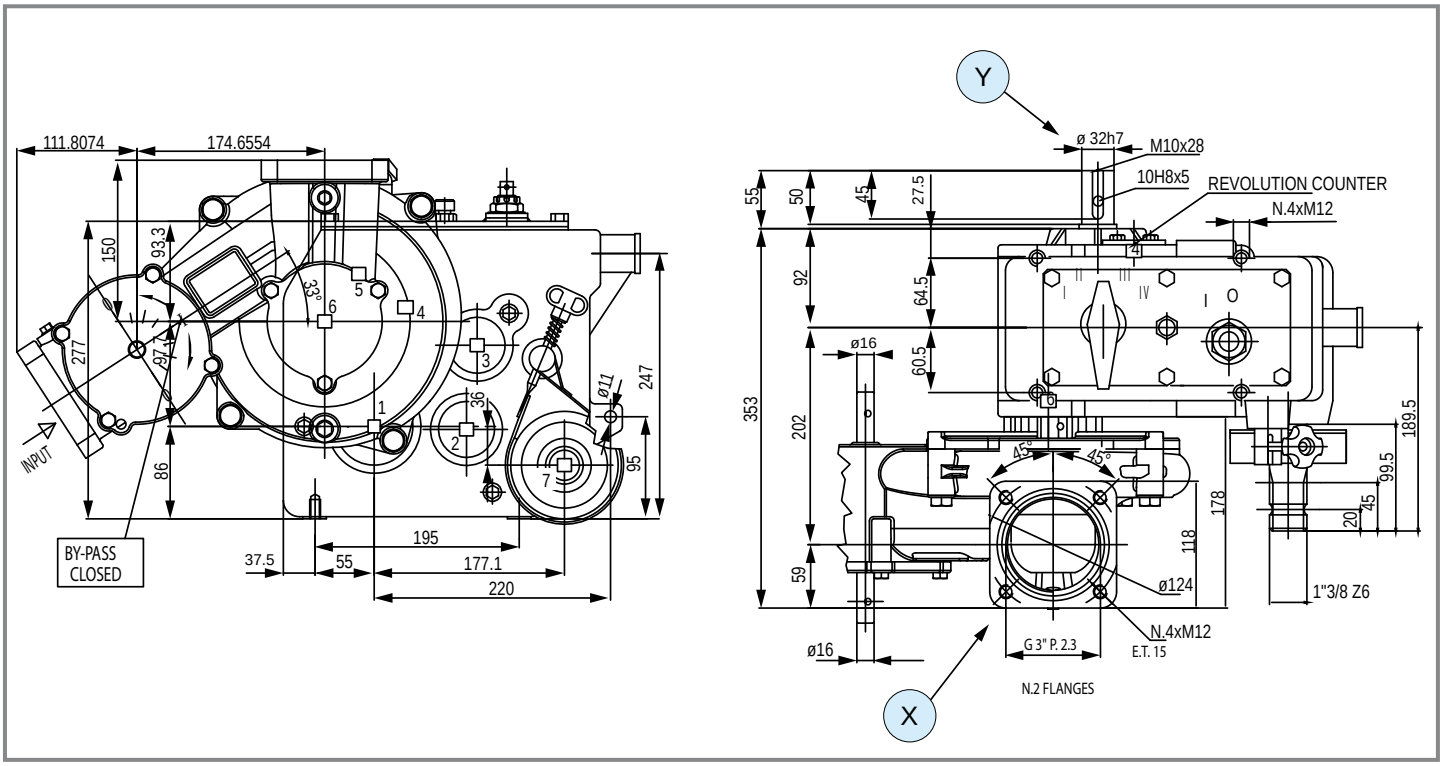

	i	M_2 [Nm]	Shaft type X	Shaft type Y	(i) P.T.O.	P.T.O.	Input	Option	Pin (on/off)	Code	Mounting	
R	**118 244 353 766**	700	Turbine	47 L 55 ø 32	11:1	1 1" 3/8 Z6	X	-	V	9.745.767	W P.T.O. IN	std
	117 254	700	Turbine (low flow)	47 L 55 ø 32	11:1	1 1" 3/8 Z6	X	-	V	9.745.761	W P.T.O. IN	std

D-744A

Code **744**

(3.04)

[kg] 54 | [l] -

Per configurazioni non a catalogo contattare Servizio Tecnico-Commerciale
For non-catalog configurations contact Technical-Commercial Service

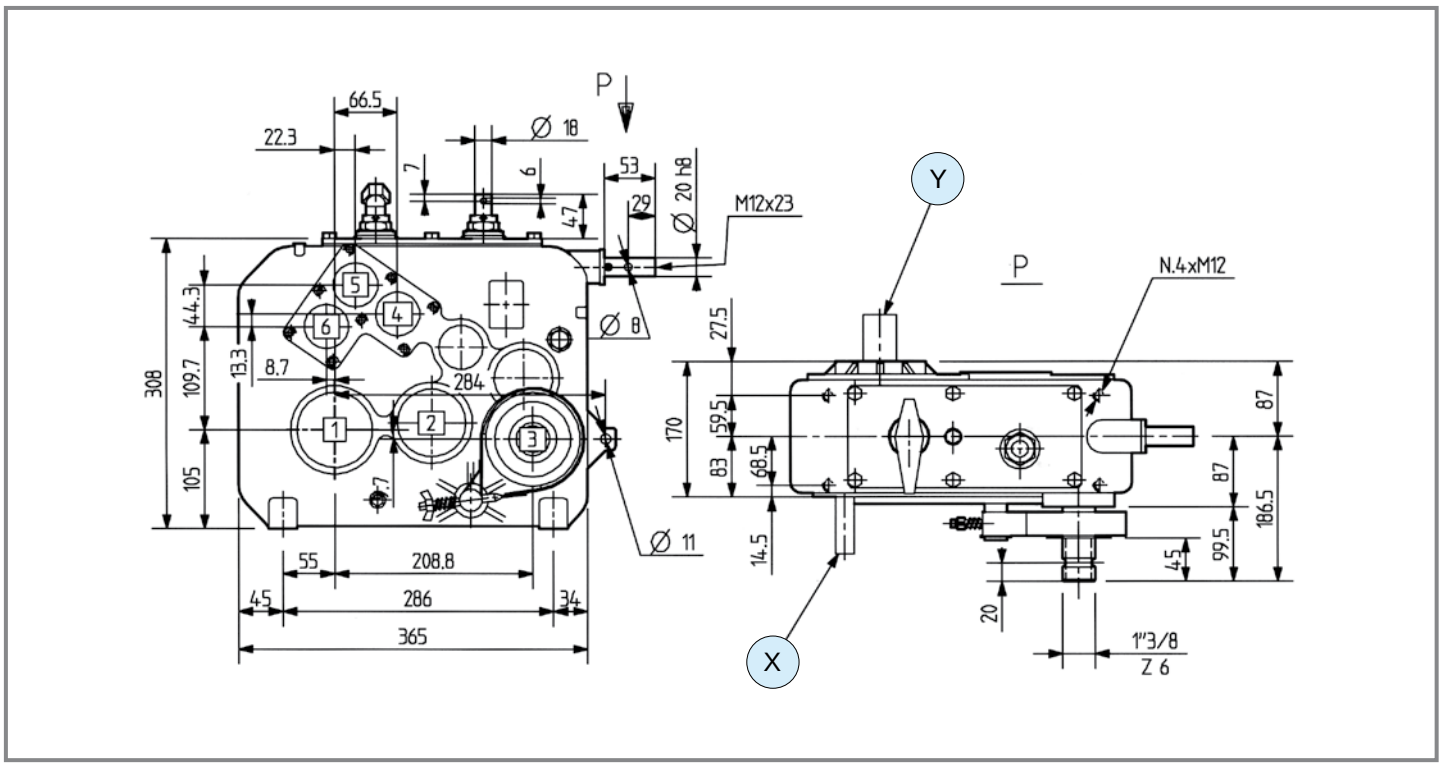

	i	M_2 [Nm]	Shaft type X	Shaft type Y	(i) P.T.O.	P.T.O.	Input	Option	Pin (on/off)	Code	Mounting	
R	**120 249 360 781**	1100	48 L 74 ø 15	3 L 50 ø 35	11:1	1 1" 3/8 Z6	X	-	-	9.744.059	W P.T.O.	std
	119 260	1100	46 L 80 ø 19	3 L 50 ø 35	11:1	1 1" 3/8 Z6	X	-	V	9.744.023	W P.T.O.	std

comer industries

DTU-744A

Code **744**

(3.04)

[kg] 72.6 | [l] -

Per configurazioni non a catalogo contattare Servizio Tecnico-Commerciale
For non-catalog configurations contact Technical-Commercial Service

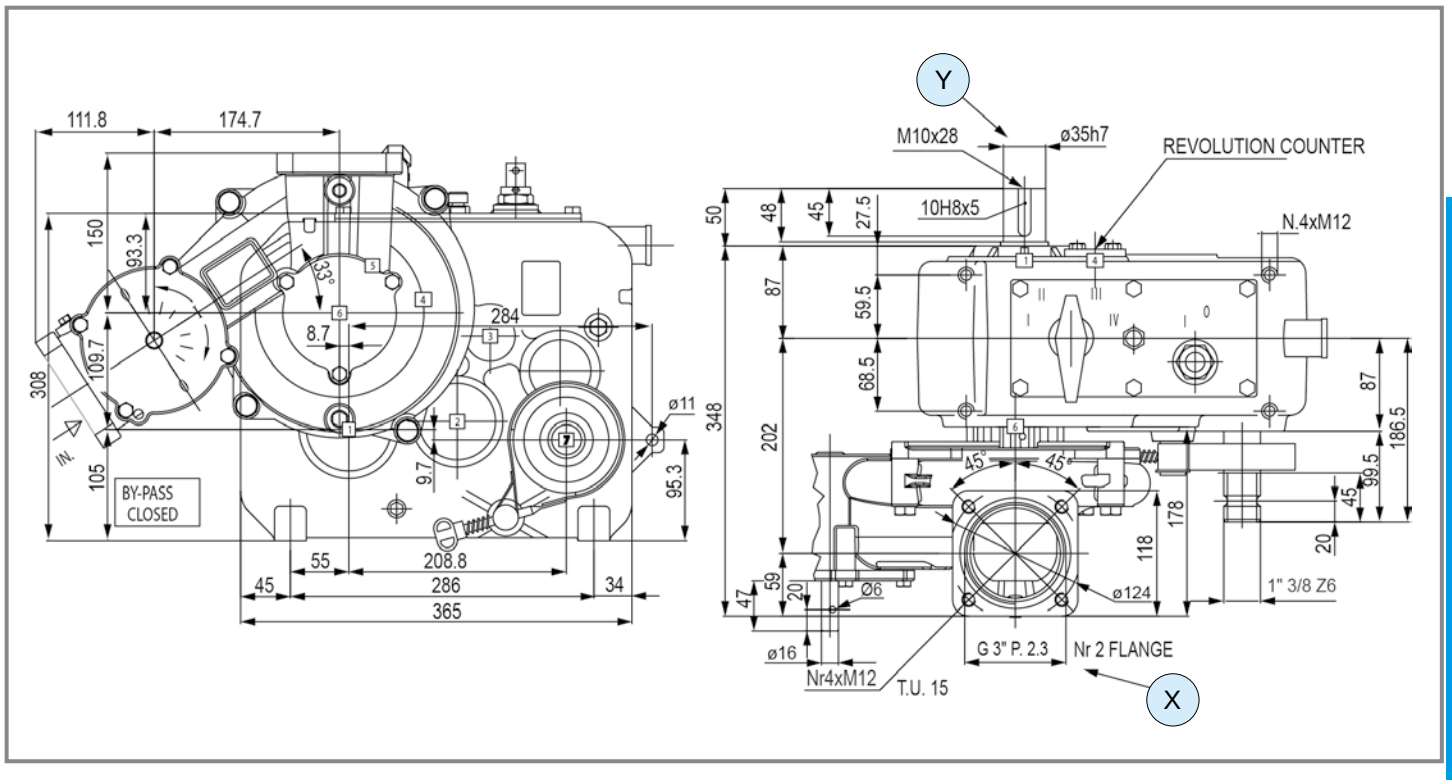

Pompe centrifughe ed irrigatori a bobina
Centrifugal Punps and Irrigation Reels

6 - Attuatore elettrico / *Electric actuator*

	i	M_2 [Nm]	Shaft type X	Shaft type Y	(i) P.T.O.	P.T.O.	Input	Option	Pin (on/off)	Code	Mounting	
R	**120 249 360 781**	1100	Turbine	3 L 50 ø 35	11:1	1 1" 3/8 Z6	X	-	-	9.744.768	W P.T.O.	std
R	**120 249 360 781**	1100	Turbine	3 L 50 ø 35	11:1	1 1" 3/8 Z6	X	6	-	9.744.766	W P.T.O.	std
	240 498 720 756	1100	Turbine (low flow)	3 L 50 ø 35	11:1	1 1" 3/8 Z6	X	-	V	9.744.761	W P.T.O.	std

D-742A

Code **742**

(3.04)

[kg] 55.4 | [l] -

Per configurazioni non a catalogo contattare Servizio Tecnico-Commerciale
For non-catalog configurations contact Technical-Commercial Service

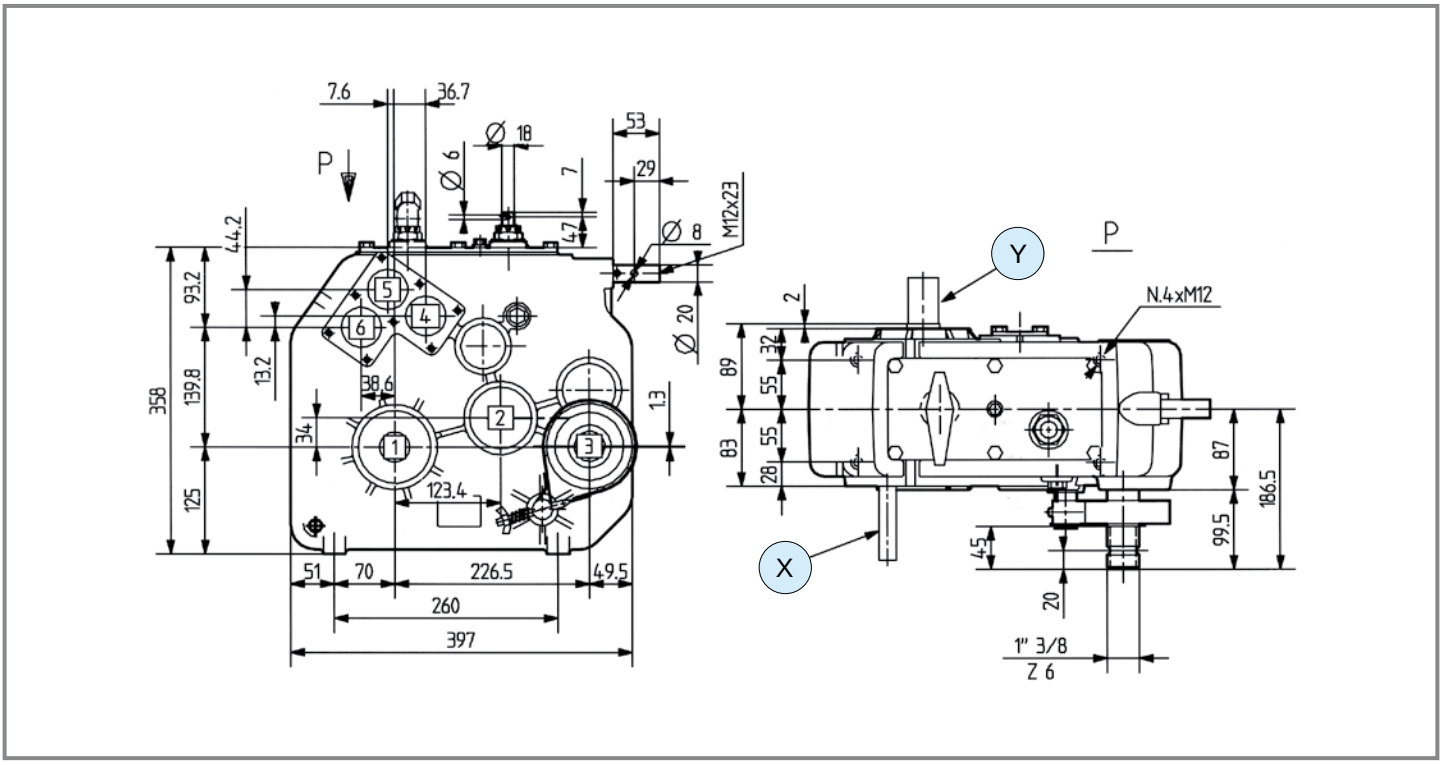

	i	M_2 [Nm]	Shaft type X	Shaft type Y	(i) P.T.O.	P.T.O.	Input	Option	Pin (on/off)	Code	Mounting	
R	**116 241 348 756**	2100	48 L 94 ø 15	4 L 50 ø 40	10.7:1	1 1" 3/8 Z6	X	-	-	9.742.061	W P.T.O. IN	std
R	**116 241 348 756**	2100	46 L 80 ø 19	4 L 50 ø 40	10.7:1	1 1" 3/8 Z6	X	-	V	9.742.002	W P.T.O. IN	std
	115 250	2100	46 L 80 ø 19	4 L 50 ø 40	10.7:1	1 1" 3/8 Z6	X	-	V	9.742.074	W P.T.O. IN antiorario ccw	std

DTU-742A

Code **742**

(3.04)

[kg] 70 | [l] -

Per configurazioni non a catalogo contattare Servizio Tecnico-Commerciale
For non-catalog configurations contact Technical-Commercial Service

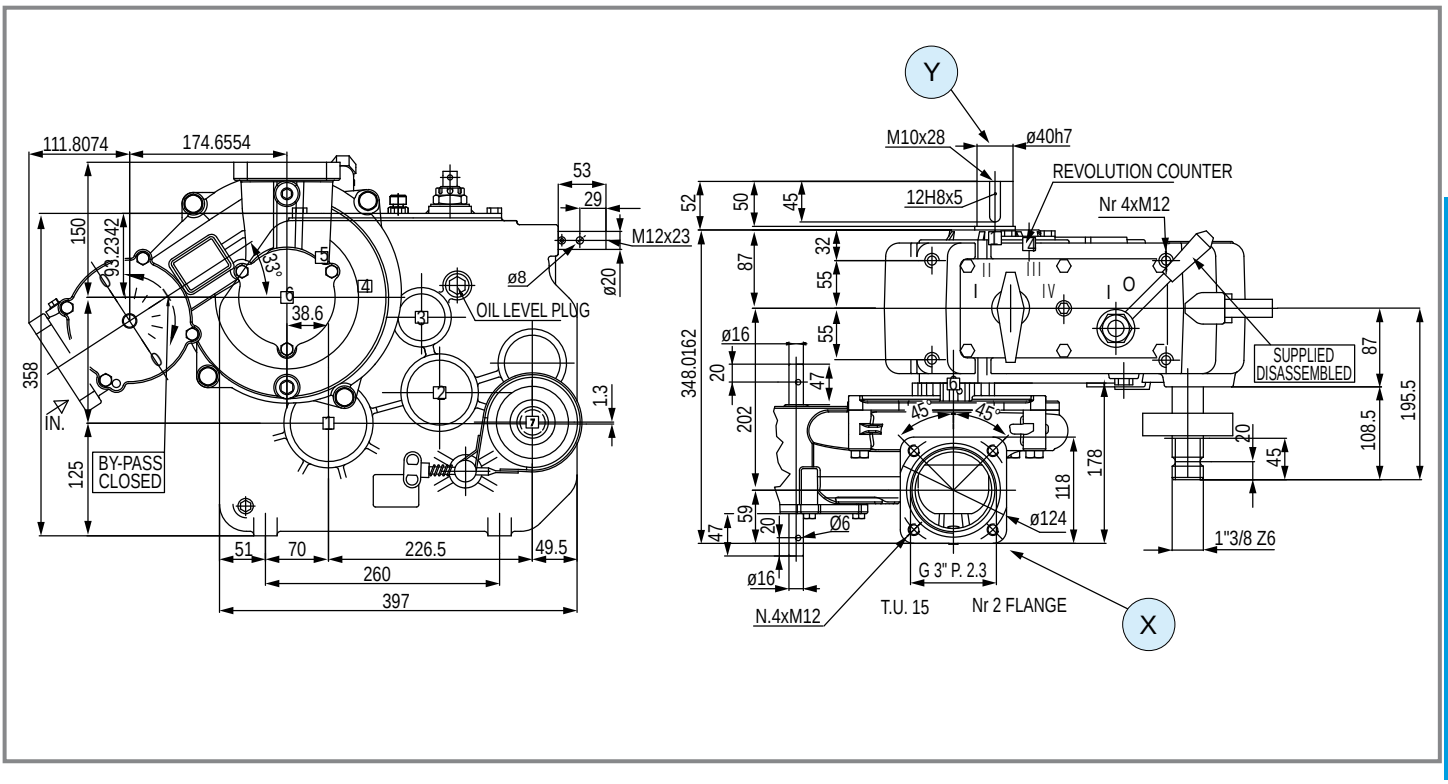

	i	M_2 [Nm]	Shaft type X	Shaft type Y	(i) P.T.O.	P.T.O.	Input	Option	Pin (on/off)	Code	Mounting	
R	**116 241 348 756**	2100	Turbine	4 L 50 ø 40	10.7:1	1 1" 3/8 Z6	X	-	-	9.742.765	W P.T.O. in	std
R	**232 482 696 151**	2100	Turbine (low flow)	4 L 50 ø 40	10.7:1	1 1" 3/8 Z6	X	-	V	9.742.761	W P.T.O. in	std



Per configurazioni non a catalogo contattare Servizio Tecnico-Commerciale
For non-catalog configurations contact Technical-Commercial Service

		i	P_{1max} [kW]	Nr. of disk	Larghezza di taglio *Cutting width*	p.
Barre falcianti *Cutting bar*	**FR-507**	M -	41.00	5 6 7 8	2.1 2.4 2.9 3.2	180
		- -				
		R 2.73				
	FR-522	M -	46.30	5 6 7 8 9	1.7 2.1 2.4 2.9 3.2	181
		- 1.00				
		R -				
	FR-567	M -	46.30	6 7 8 9	2.5 2.9 3.3 3.7	182
		- 1.00				
		R -				

		i	$P_{1 - max}$ [kW]	$M_{2 max}$ [Nm]	Tipologia alberi disponibili *Available type of shafts*	p.
Scatole ad ingranaggi per barre falcianti *Gearboxes for cutting bar*	**LF-142A**	M 2.06	33.0	137	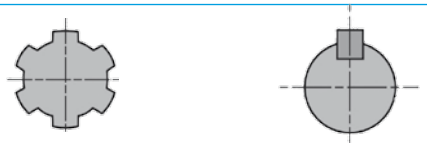	183
		- -				
		R -				
	T-304A	M	50.7	359	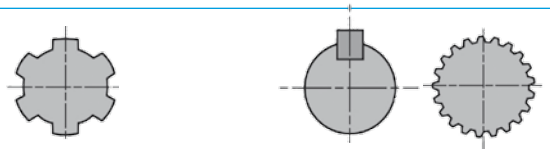	184
		- -				
		R -				
	T-312HD	M 3.17÷3.91	50.0	146	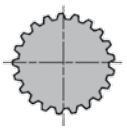	185
		- -				
		R -				
	TV-312H	M 3.00	62.5	261	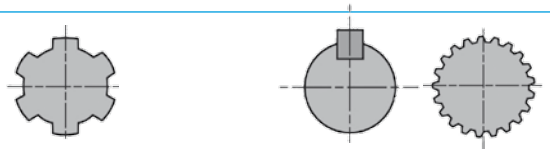	186
		- -				
		R -				
	T-278D	M 1.35	55.0	699	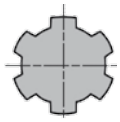	187
		- -				
		R -				
	T-279D	M 1.35	62.5	794	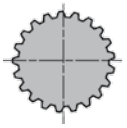	188
		- -				
		R 1.35				

FR-507

Code **507**

(4.01)



Per configurazioni non a catalogo contattare Servizio Tecnico-Commerciale
For non-catalog configurations contact Technical-Commercial Service

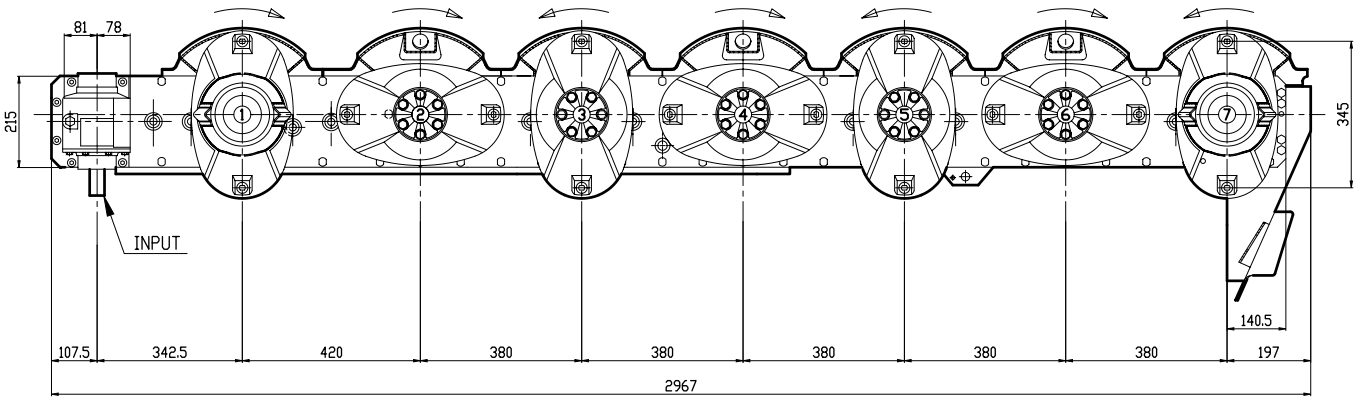

		8 - Attacco-lama rapido / Quickfit				9 - Dispositivo di sicurezza / Safety device						
	i	**N_1 [rpm]**	**P_1 [kW]**	**Nr. of disk**	**Lunghezza di taglio Cutting width [m]**	**Gearbox [l]**	**Cutter bar [l]**	**[kg]**	**Option**	**Code light**	**Code heavy**	
R	**2.73**	1080	25.7	5	2.1	0.7	2.1	145	8 9	9.505.201	9.505.211	std
R	**2.73**	1080	30.1	6	2.4	0.7	2.7	167	8 9	9.506.201	9.506.213	std
R	**2.73**	1080	36.0	7	2.9	0.7	3.2	170	8 9	9.507.201	9.507.213	std
R	**2.73**	1080	41.0	8	3.2	0.7	4.2	224	8 9	-	9.508.209	std

FR-522

Code **522**

(4.01)



Per configurazioni non a catalogo contattare Servizio Tecnico-Commerciale
For non-catalog configurations contact Technical-Commercial Service

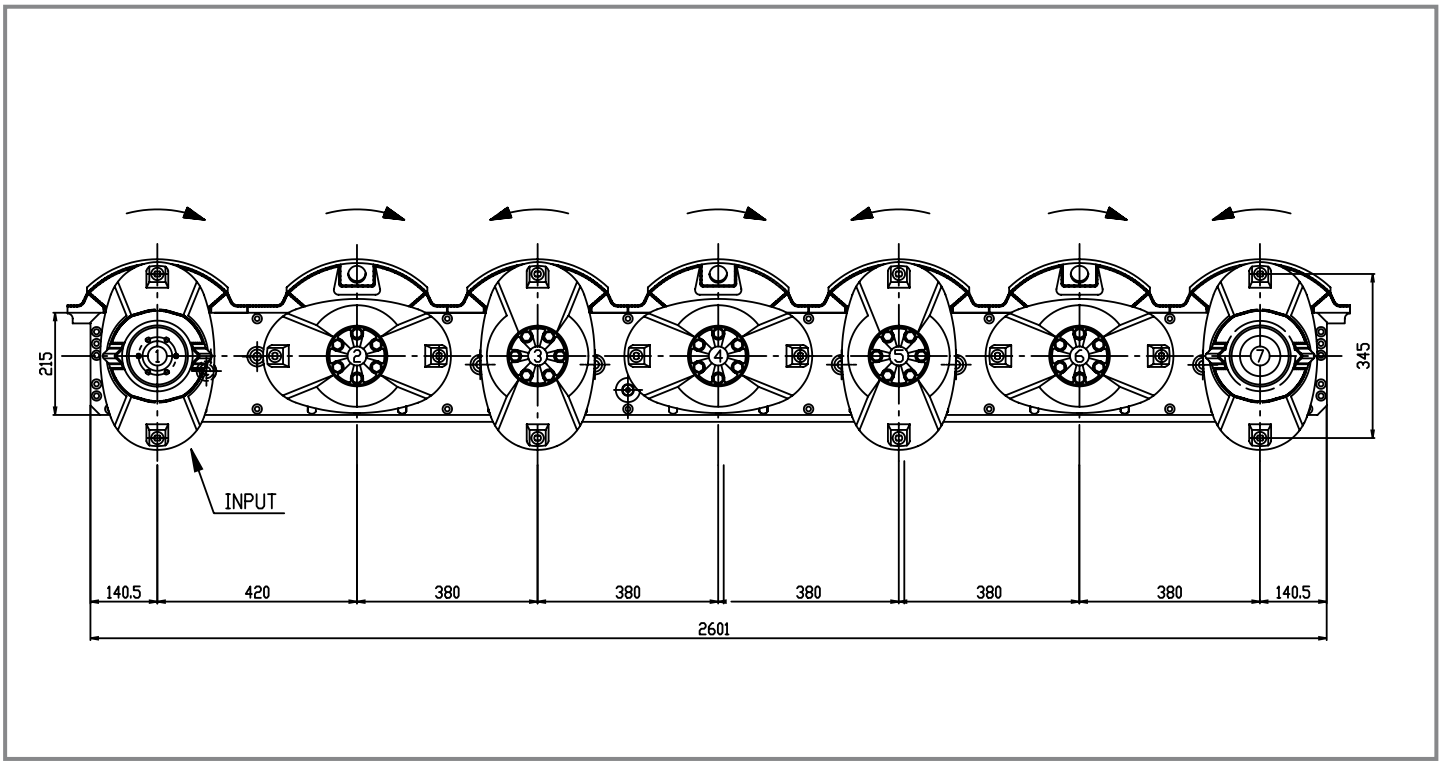

		8 - Attacco-lama rapido / Quickfit				9 - Dispositivo di sicurezza / Safety device						
	i	**N_1 [rpm]**	**P_1 [kW]**	**Nr. of disk**	**Lunghezza di taglio Cutting width [m]**	**Gearbox [l]**	**Cutter bar [l]**	**[kg]**	**Option**	**Code light**	**Code heavy**	
	1.00	3000	25.7	5	1.7	-	1.5	116	8 9	9.520.100	-	std
	1.00	3000	30.9	6	2.1	-	1.8	138	8 9	9.521.100	-	std
-	**1.00**	3000	36.0	7	2.4	-	2.3	165	8 9	9.522.100	9.522.108	std
	1.00	3000	41.2	8	2.9	-	2.8	198	8 9	9.523.100	9.523.113	std
	1.00	3000	46.3	9	3.2	-	3.1	-	8 9	-	-	special

FR-567

Code **567**

(4.01)



Per configurazioni non a catalogo contattare Servizio Tecnico-Commerciale
For non-catalog configurations contact Technical-Commercial Service

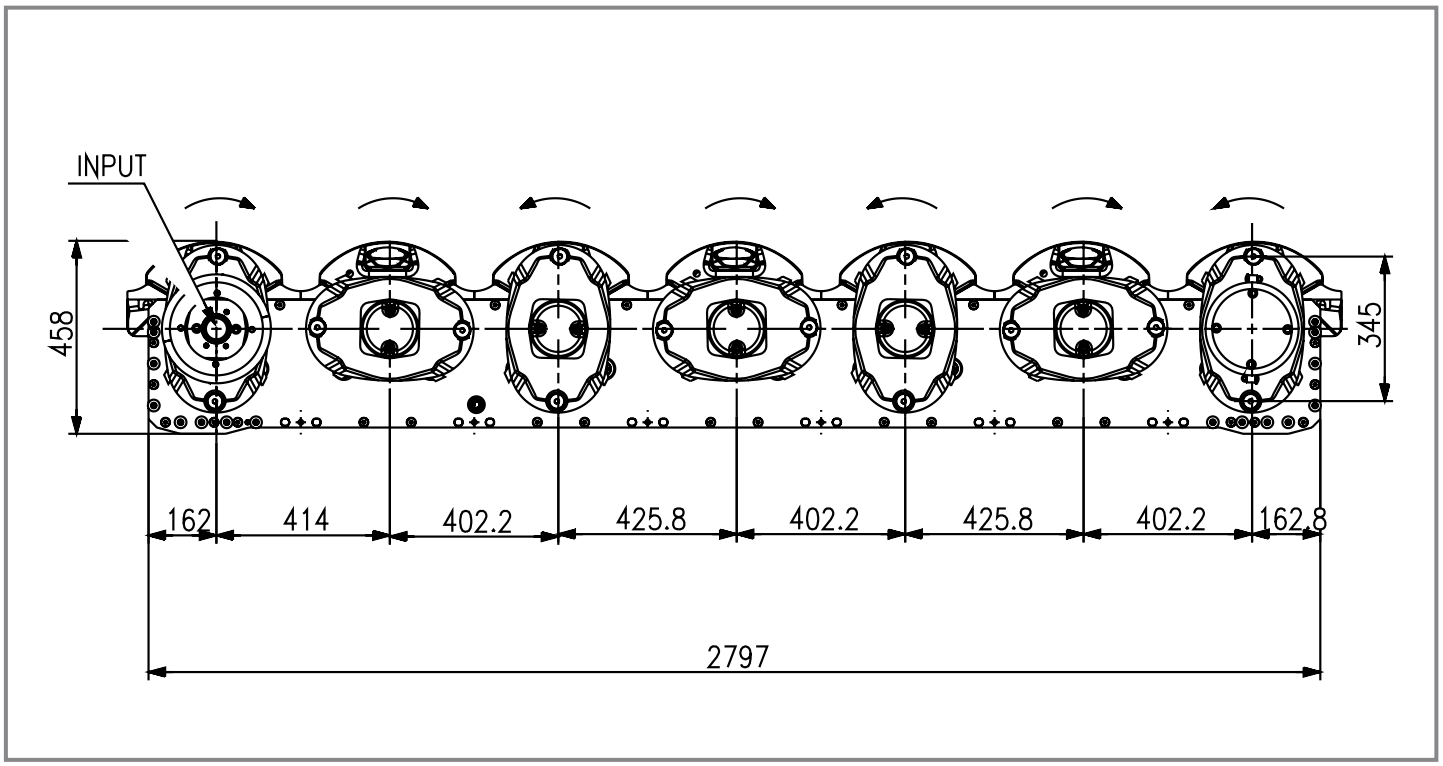

		8 - Attacco-lama rapido / Quick fit										
		i	**N_1 [rpm]**	**P_1 [kW]**	**Nr. of disk**	**Lunghezza di taglio Cutting width [m]**	**Gearbox [l]**	**Cutter bar [l]**	**[kg]**	**Option**	**Code light**	**Code heavy**
-		**1.00**	3000	31.0	6	2.5	-	1.5	94	8	-	-	special
-		**1.00**	3000	36.0	7	2.9	-	1.5	116	8	9.567.000	-	std
-		**1.00**	3000	41.2	8	3.3	-	1.8	138	8	-	-	special
-		**1.00**	3000	46.3	9	3.7	-	2.3	165	8	-	-	special

LF-142A

Code **142**

(4.01)

[kg] 22.5 | [l] -

Per configurazioni non a catalogo contattare Servizio Tecnico-Commerciale
For non-catalog configurations contact Technical-Commercial Service

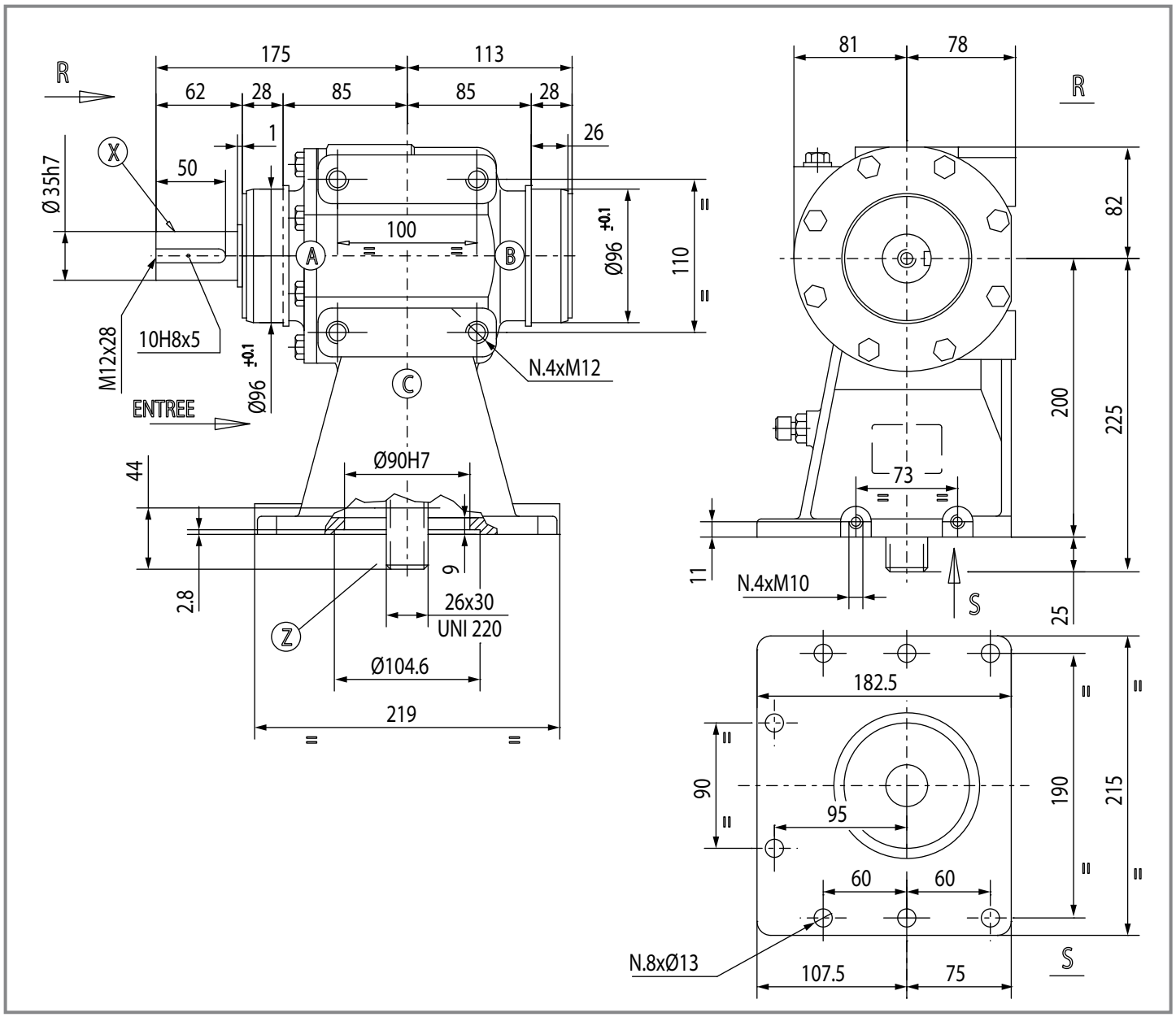

	i	N_1 [rpm]	P_1 [kW]	M_2 [Nm]	Shaft type X	Shaft type Y	Shaft type Z	Input	Option	Code	Mounting	
M	**2.06**	1080	33.0	137	3 L 62 ø 35	-	68 26x30 UNI220	X	-	9.142.001	23 24	std

T-304A

Code **304**

(4.01)



[kg] 19 | [l] 1.1

Per configurazioni non a catalogo contattare Servizio Tecnico-Commerciale
For non-catalog configurations contact Technical-Commercial Service

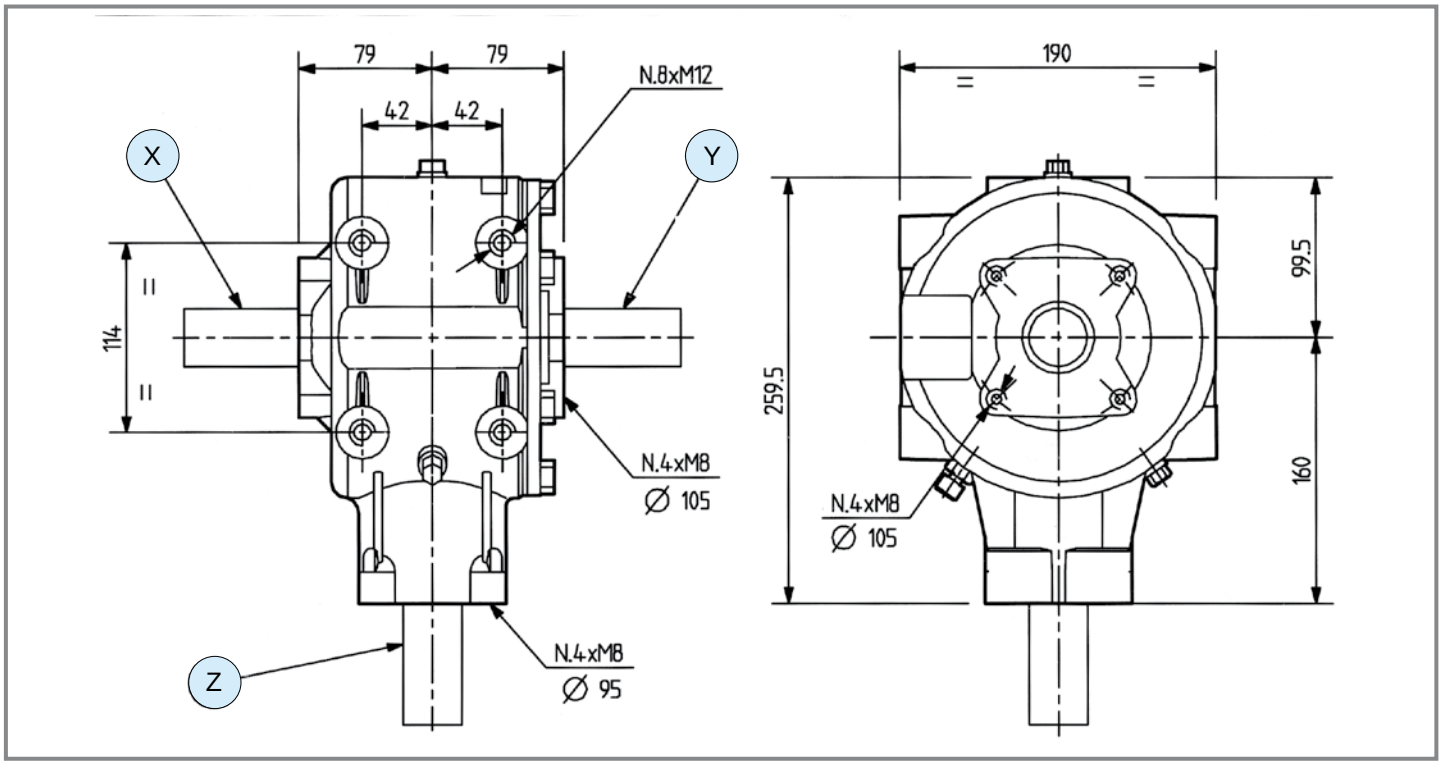

	i	N_1 [rpm]	P_1 [kW]	M_2 [Nm]	Shaft type X	Shaft type Y	Shaft type Z	Input	Option	Code	Mounting	
M	**1.93**	540	40.4	359	1 — 1" 3/8 Z6	-	1 — 1" 3/8 Z6	X	-	9.304.236	23 / 24	std
M	**3.00**	1000	50.7	157	1" 3/8 Z6 Ø35 L50 with key	-	2 — 1"3/8 Z21	X	-	9.304.237	23 / 24	std
	3.00	1000	50.7	157	1 — 1" 3/8 Z6	4 — L 80, ø 40	1 — 1" 3/8 Z6	X	-	9.304.398	27 / 28	std

comer industries

T-312HD

Code **312**

(4.01)



[kg] 27 | [l] 1.5

Per configurazioni non a catalogo contattare Servizio Tecnico-Commerciale
For non-catalog configurations contact Technical-Commercial Service

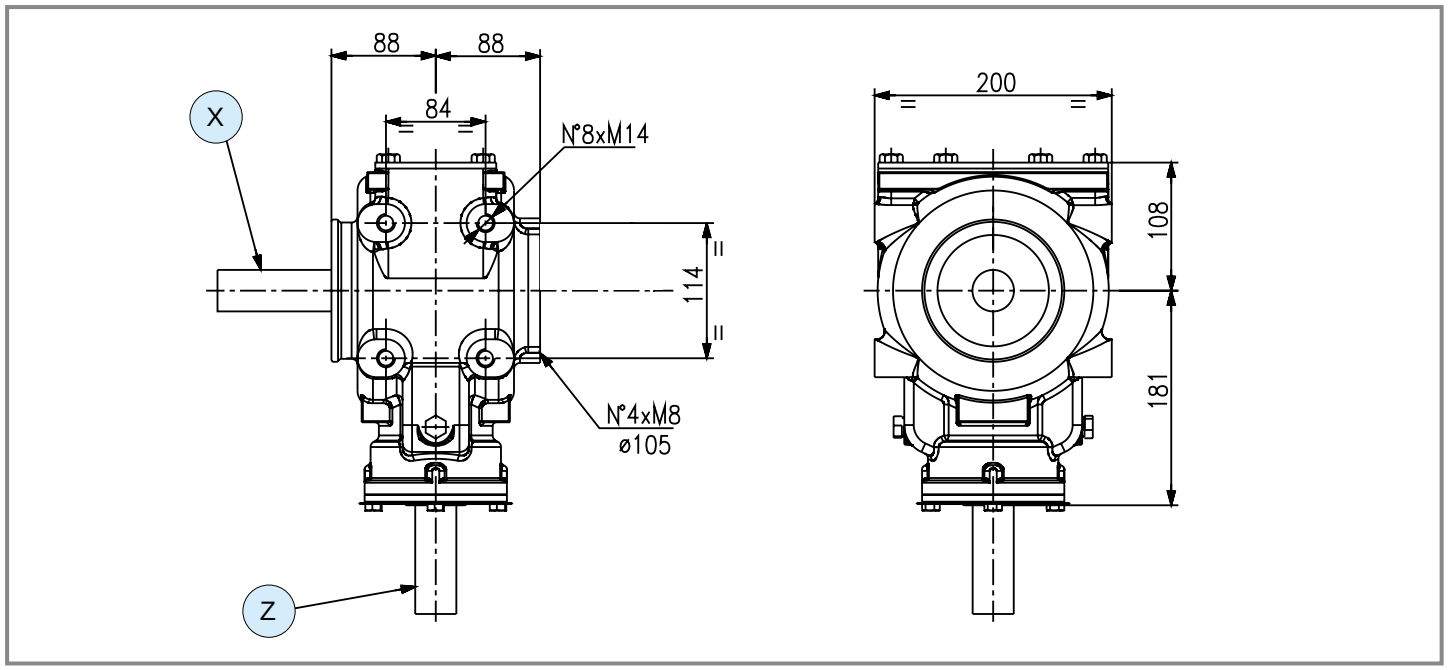

	i	N_1 [rpm]	P_1 [kW]	M_2 [Nm]	Shaft type X	Shaft type Y	Shaft type Z	Input	Option	Code	Mounting	
M	**3.91**	1000	50	118	2 1"3/8 Z21	-	2 1"3/8 Z21	X	-	-	21 22	**std**
	3.17	1000	50	146	2 1"3/8 Z21	-	2 1"3/8 Z21	X	-	-	21 22	**std**

TV-312H

Code **312**

(4.01)



[kg] 26 | [l] -

Per configurazioni non a catalogo contattare Servizio Tecnico-Commerciale
For non-catalog configurations contact Technical-Commercial Service

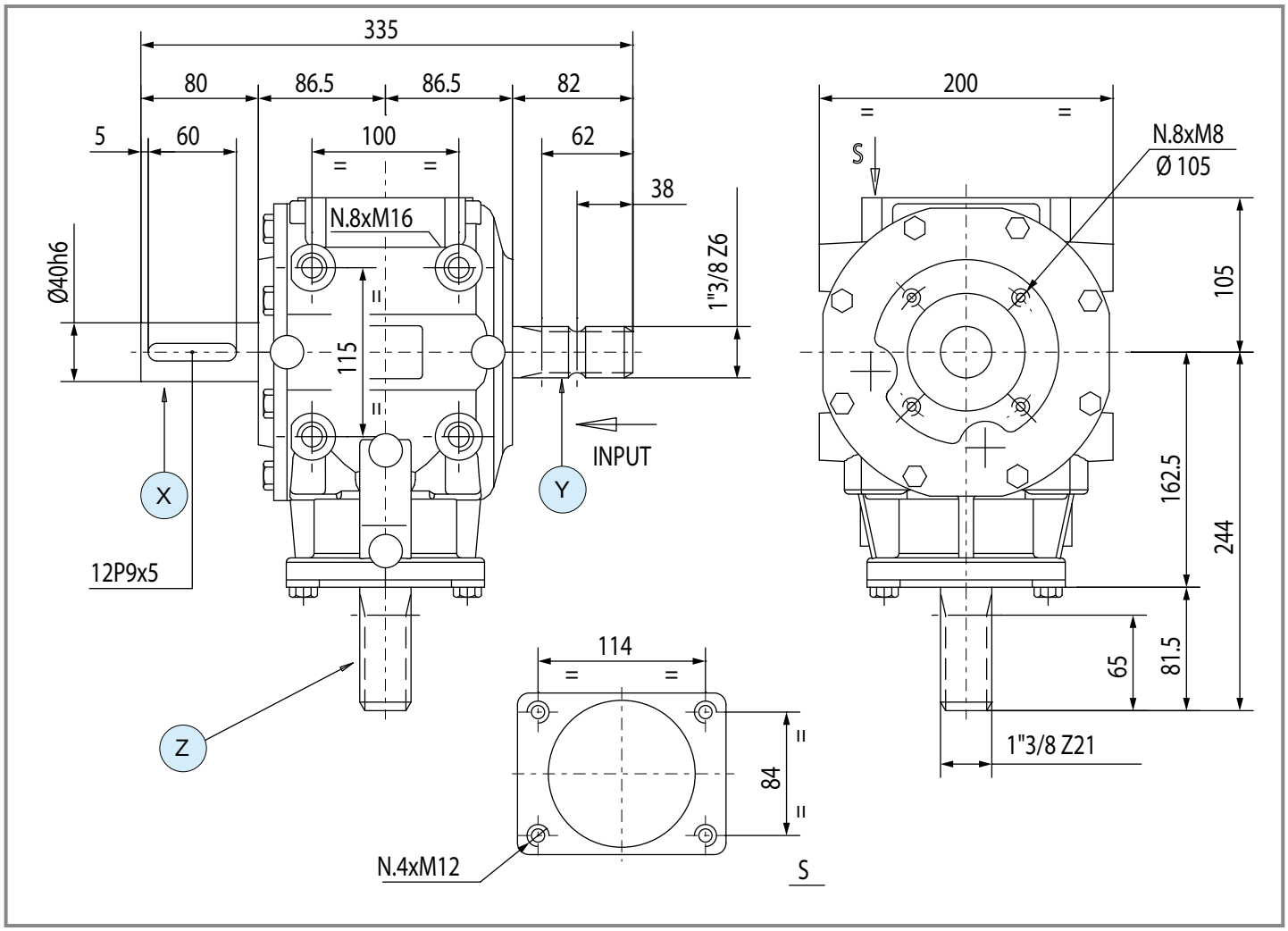

	i	N_1 [rpm]	P_1 [kW]	M_2 [Nm]	Shaft type X	Shaft type Y	Shaft type Z	Input	Option	Code	Mounting	
M	**3.00**	540	45.6	261	1" 3/8 Z6 Ø40 L105.5 with key	-	2 	X	-	9.312.624	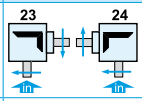	std
	3.00	1000	62.5	193	4 	1 	2 	Y	-	9.312.705	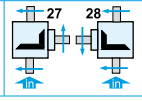	std

comer industries

T-278D

Code **278**

(4.01)



[kg] 55 | [l] 1.2+1

Per configurazioni non a catalogo contattare Servizio Tecnico-Commerciale
For non-catalog configurations contact Technical-Commercial Service

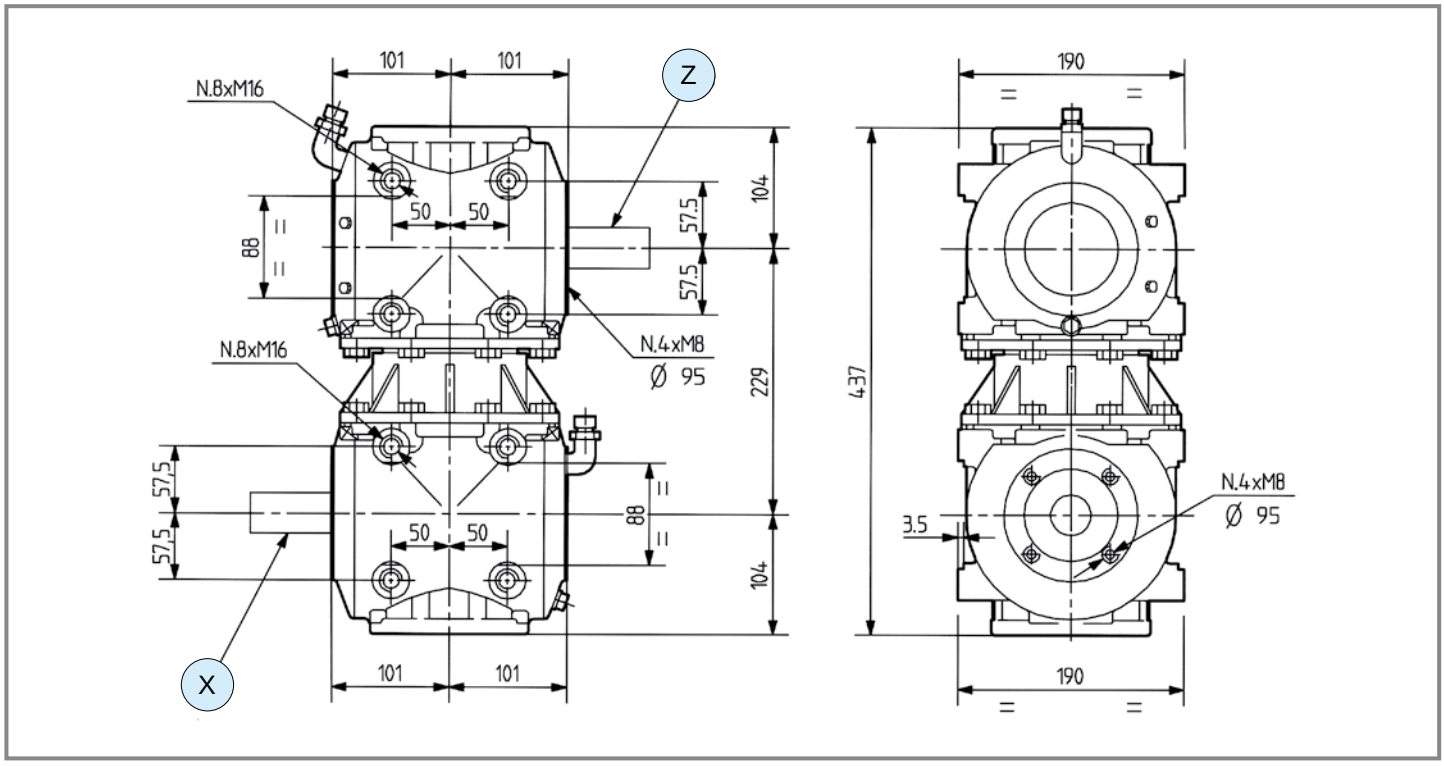

	i	N_1 [rpm]	P_1 [kW]	M_2 [Nm]	Shaft type X	Shaft type Y	Shaft type Z	Input	Option	Code	Mounting	
M	**1.35**	540	44.1	560	1 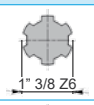 1" 3/8 Z6	-	1 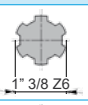 1" 3/8 Z6	X	-	9.278.215	227 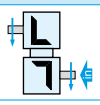	std
	1.35	540	55.0	699	1  1" 3/8 Z6	-	1  1" 3/8 Z6	X	-	9.278.232	227 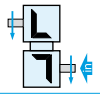	std

T-279D

Code **279**

4.01



[kg]	64	[l]	1.9+1.7

Per configurazioni non a catalogo contattare Servizio Tecnico-Commerciale
For non-catalog configurations contact Technical-Commercial Service

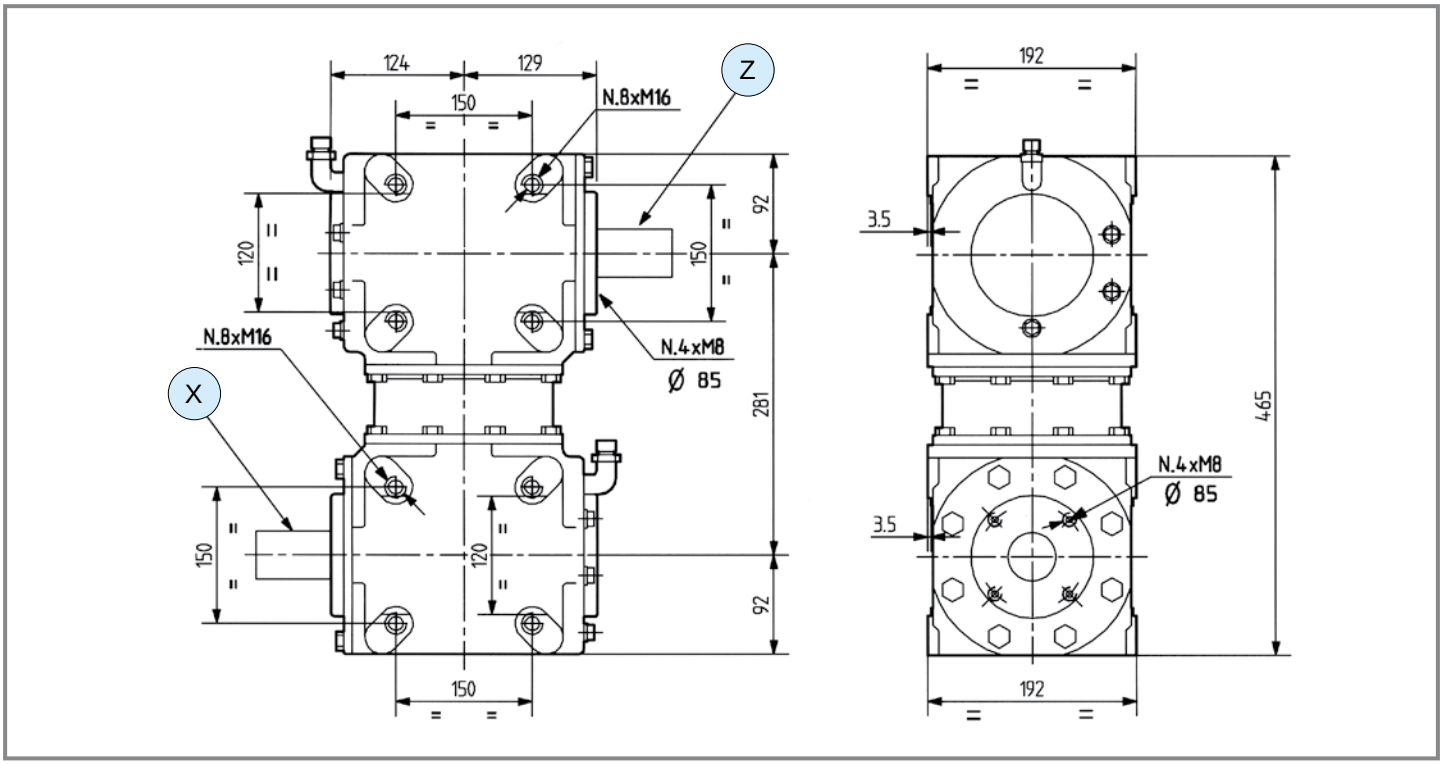

	i	N_1 [rpm]	P_1 [kW]	M_2 [Nm]	Shaft type X	Shaft type Y	Shaft type Z	Input	Option	Code	Mounting	
M	**1.35**	540	62.5	794	2 1"3/8 Z21	-	2 1"3/8 Z21	X	-	9.279.305	227	**std**
R	**1.35**	1000	62.5	781	2 1"3/8 Z21	-	2 1"3/8 Z21	X	-	9.279.303	227	**std**

Questa pagina è lasciata intenzionalmente bianca
This page is intentionally left blank

Giroandanatori e Spandifieno rotativi
Rotary Rakes and Rotary Tedders

(4.02) (4.05)

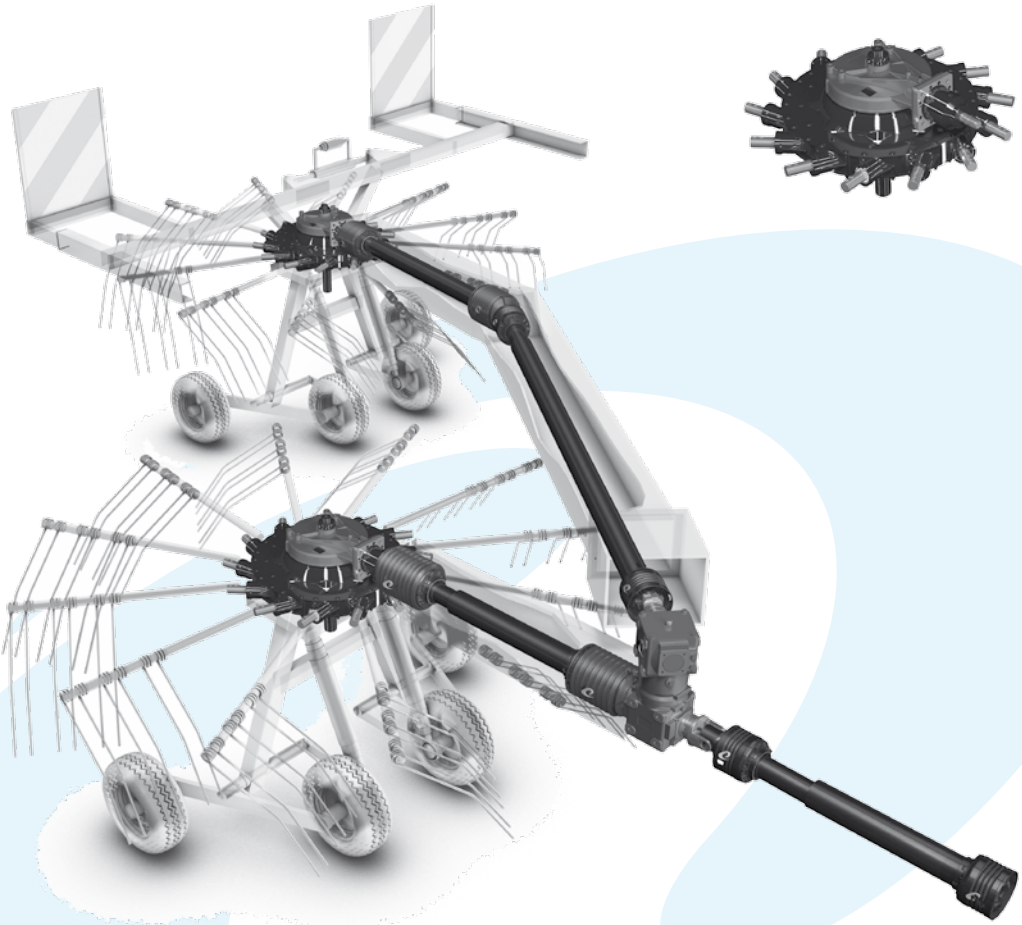

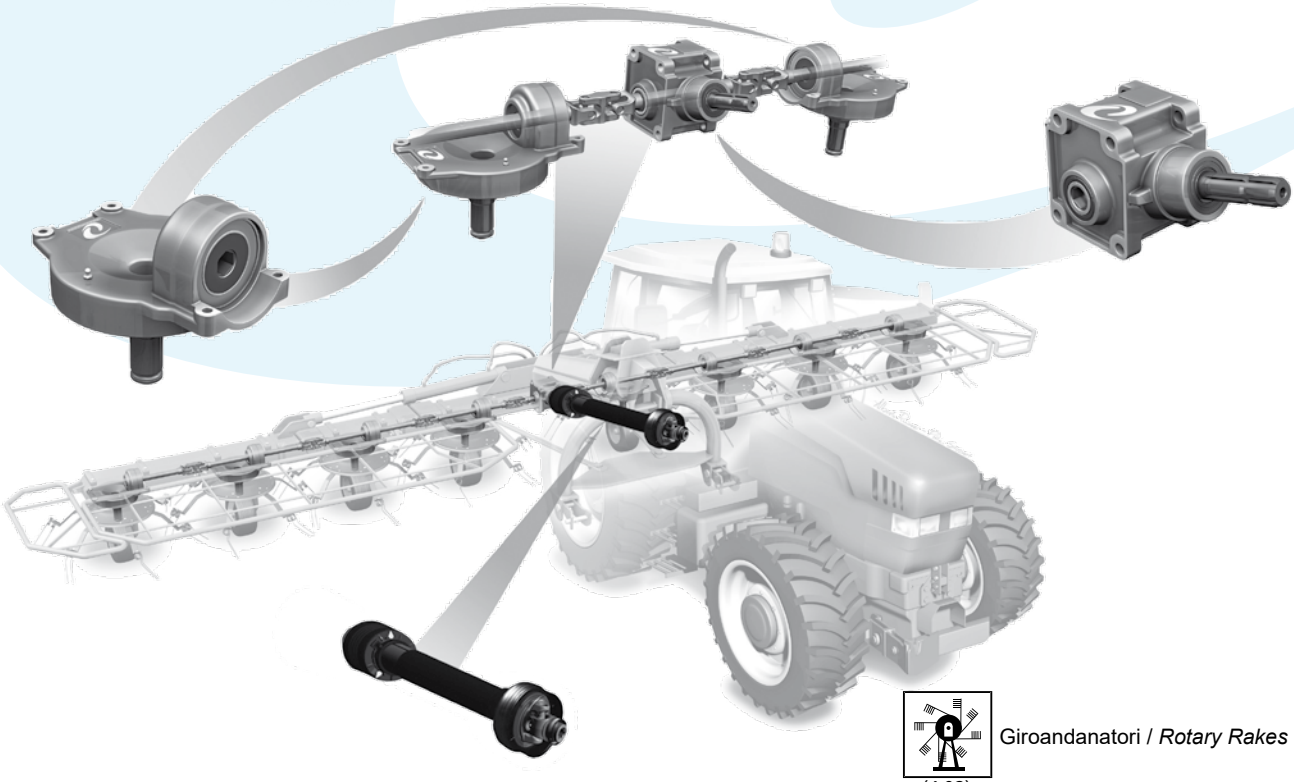

(4.02) Giroandanatori / *Rotary Rakes*

(4.05) Spandifieno rotativi / *Rotary Tedders*

Per configurazioni non a catalogo contattare Servizio Tecnico-Commerciale
For non-catalog configurations contact Technical-Commercial Service

Giroandanatori e Spandifieno rotativi
Rotary Rakes and Rotary Tedders

(4.02) (4.05)

	i	$M_{2\text{ - max}}$ [Nm]	Tipologia alberi disponibili *Available type of shafts*	p.
K-789A	R 7.5	190	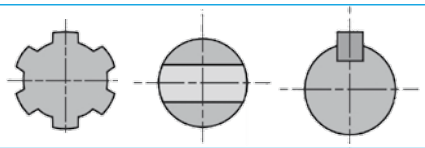	192
K-791A	R 7.2	190	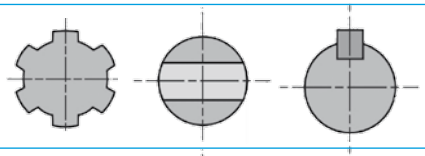	193
K-792A	R 8.2÷9.7	210÷230	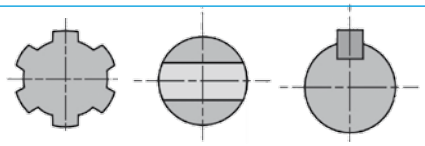	194
K-794A	R 8.1÷8.2	210	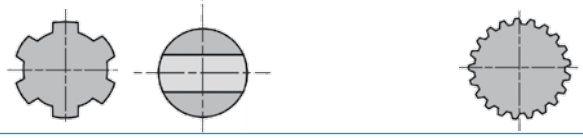	195
K-795T	R 9.2÷9.7	200÷210	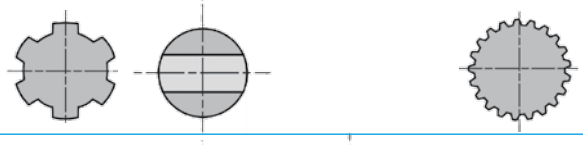	196
K-799A	R 8.1	210	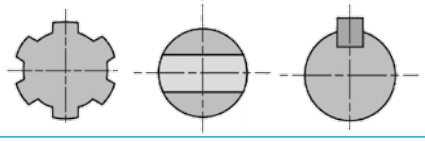	197
Y-890A	M 1.25	343	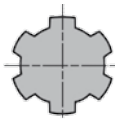	198
	- 1.00	429		
	R 1.25	536		
TB-318J	R 1.77	607	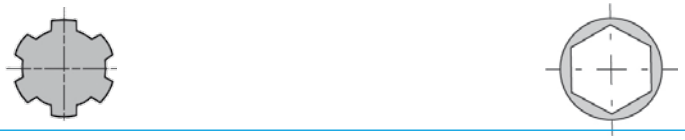	199
TB-319J	R 2	226	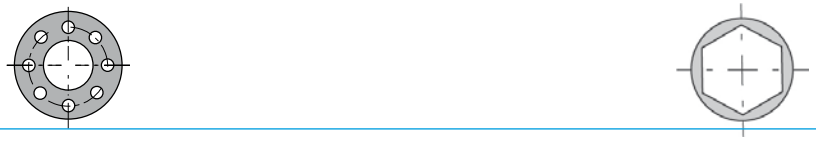	200
TB-320A	R 1.77	1002	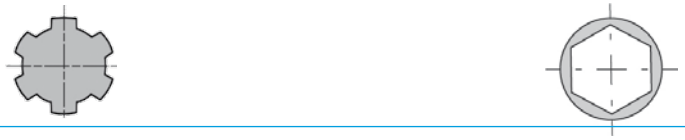	201
TB-323J	R 1.54÷1.69	406		202
LB-324J	R 1.54÷2.0	370		203

K-789A

Code **789**

(4.02)



[kg] 67 | [l] 2.8

Per configurazioni non a catalogo contattare Servizio Tecnico-Commerciale
For non-catalog configurations contact Technical-Commercial Service

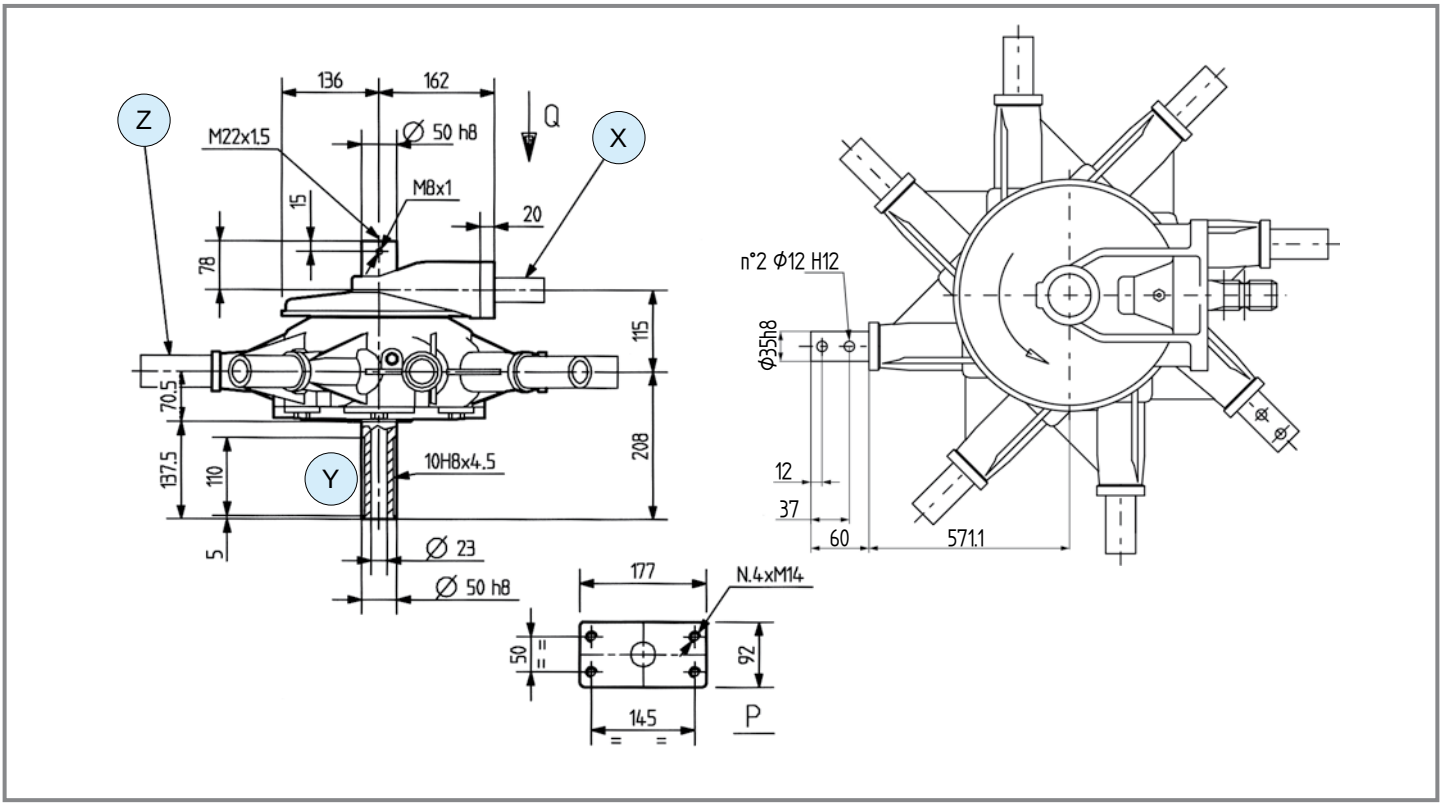

	i	N_1 [rpm]	M_2 [Nm]	nr. Arms	ø Rotor [m]	Shaft type X	Shaft type Y	Shaft type Z	Input	Code	Mounting	Direction	Note	
R	**7.20**	540	190	8	2.6	1 — 1" 3/8 Z6	23 — L 137.5 — ø 50	24 — L 60 — ø 35 — n.2 ø12	X	9.789.405	201	SX	single rotor	std

comer industries

K-791A

Code **791**

(4.02)

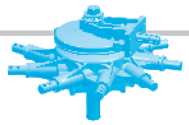

[kg] 75 | [l] 3.1

Per configurazioni non a catalogo contattare Servizio Tecnico-Commerciale
For non-catalog configurations contact Technical-Commercial Service

Disponibile versione Dx e Sx.
Available Lh and Rh version.

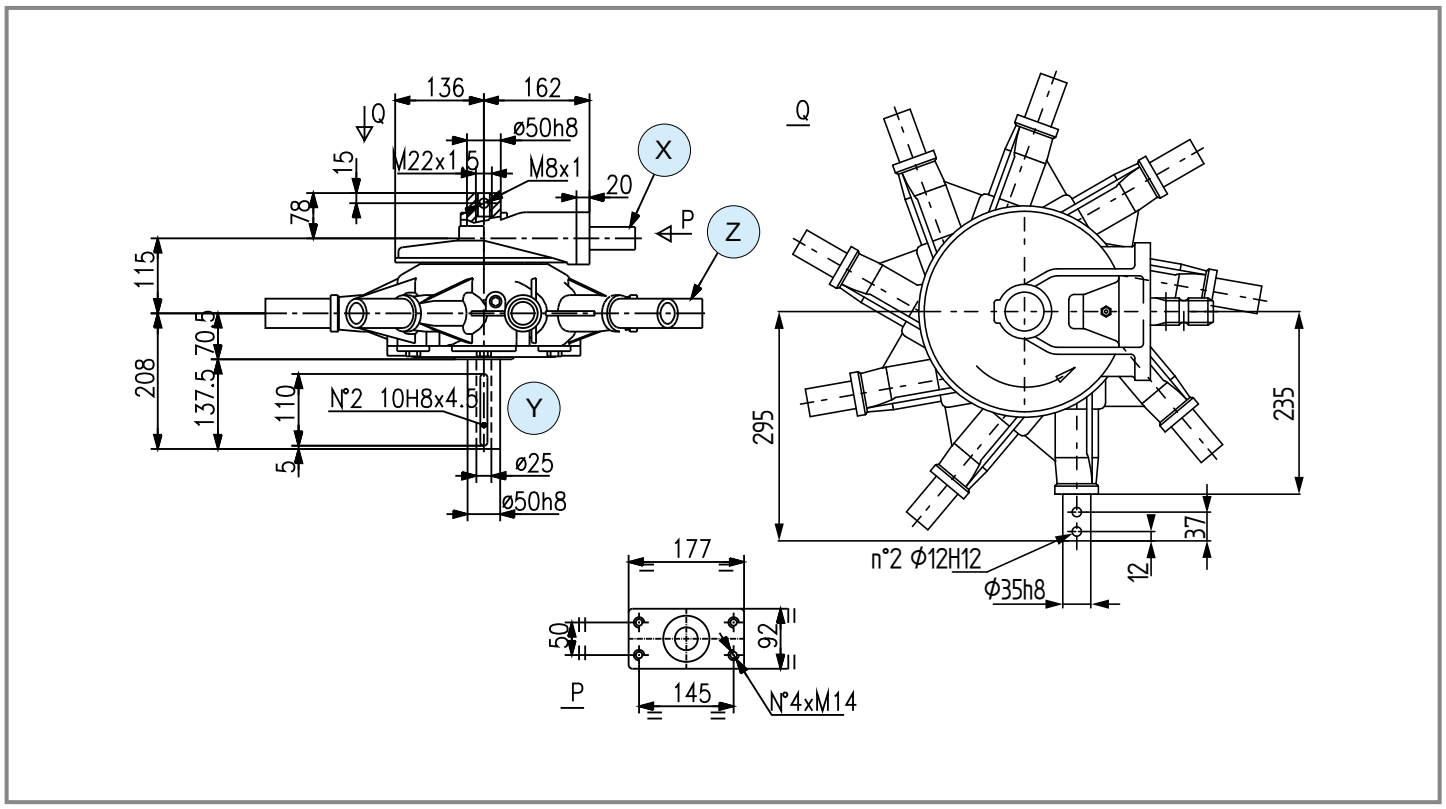

	i	N_1 [rpm]	M_2 [Nm]	nr. Arms	ø Rotor [m]	Shaft type X	Shaft type Y	Shaft type Z	Input	Code	Mounting	Direction	Note	
R	**7.20**	540	190	9	2.8	1 — 1" 3/8 Z6	23 — L 137.5, ø 50	24 — ø 35, n.2 ø12	X	9.791.406	201	SX	single rotor	std
R	**7.20**	540	190	9	2.8	1 — 1" 3/8 Z6	23 — L 177.5, ø 50	24 — ø 35, n.2 ø12	X	9.791.408	201	SX	double rotor	std
	7.20	540	190	9	2.8	1 — 1" 3/8 Z6	23 — L 177.5, ø 50	24 — ø 35, n.2 ø12	X	9.791.409	201	DX	double rotor	std

K-792A

Code **792**

(4.02)

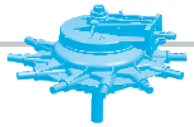

[kg] 100 | [l] 5.7

Per configurazioni non a catalogo contattare Servizio Tecnico-Commerciale
For non-catalog configurations contact Technical-Commercial Service

Disponibile versione Dx e Sx.
Available Lh and Rh version.

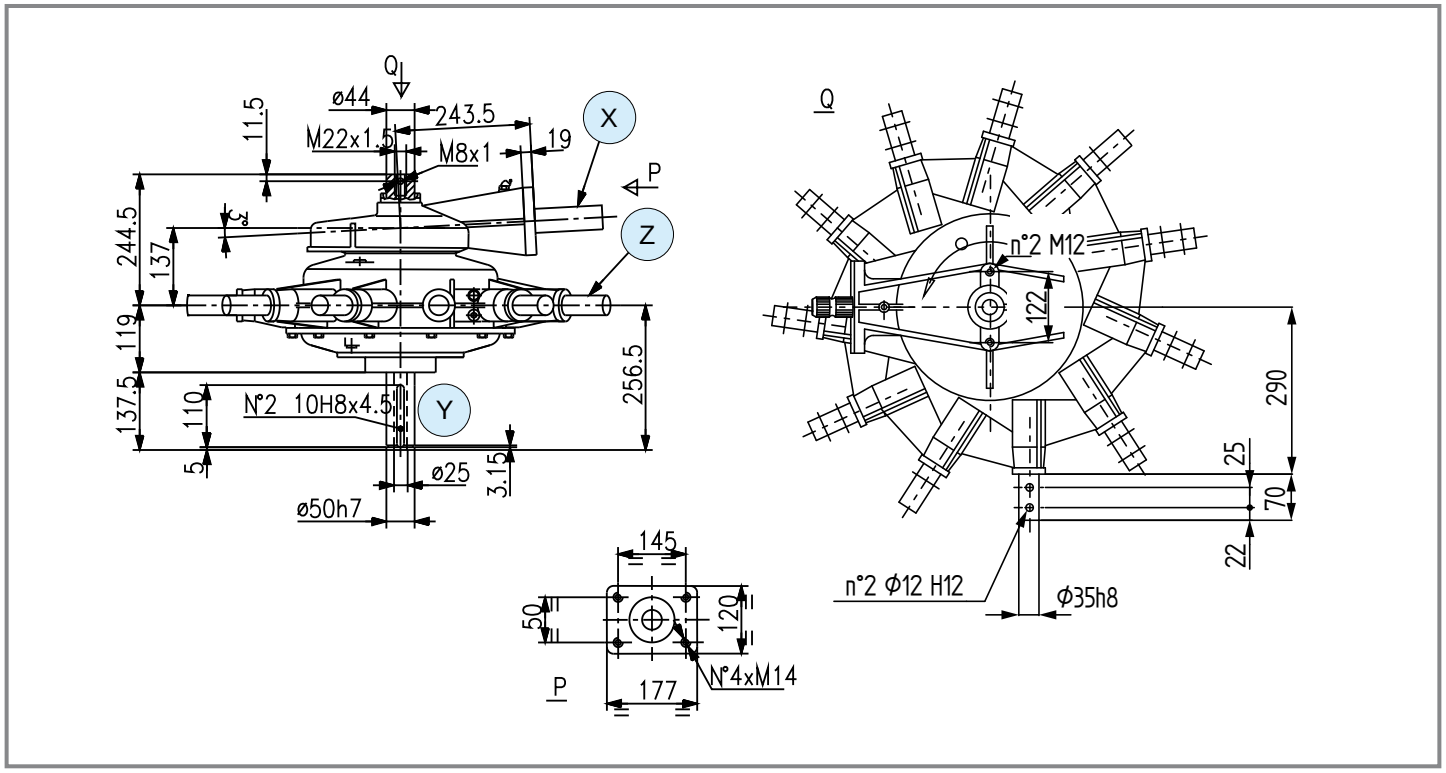

	i	N_1 [rpm]	M_2 [Nm]	nr. Arms	ø Rotor [m]	Shaft type X	Shaft type Y	Shaft type Z	Input	Code	Mounting	Direction	Note	
R	**8.20**	540	210	11	3.2	1 — 1" 3/8 Z6	23 — L 137.5 — ø 50	24 — ø 35 — n.2 ø12	X	9.792.411	201	SX	double rotor	std
R	**8.20**	540	210	11	3.2	1 — 1" 3/8 Z6	23 — L 137.5 — ø 50	24 — ø 35 — n.2 ø12	X	9.792.410	201	DX	double rotor	std
R	**8.20**	540	210	11	3.2	1 — 1" 3/8 Z6	23 — L 137.5 — ø 50	24 — ø 35 — n.2 ø12	X	9.792.401	201	SX	single rotor	std
R	**9.70**	540	230	11	3.2	1 — 1" 3/8 Z6	23 — L 137.5 — ø 50	24 — ø 35 — n.2 ø12	X	9.792.317	201	SX	single rotor	std

K-794A

Code **794**

(4.02)

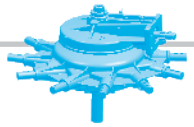

[kg] 114 | [l] -

Per configurazioni non a catalogo contattare Servizio Tecnico-Commerciale
For non-catalog configurations contact Technical-Commercial Service

Disponibile versione Dx e Sx.
Available Lh and Rh version.

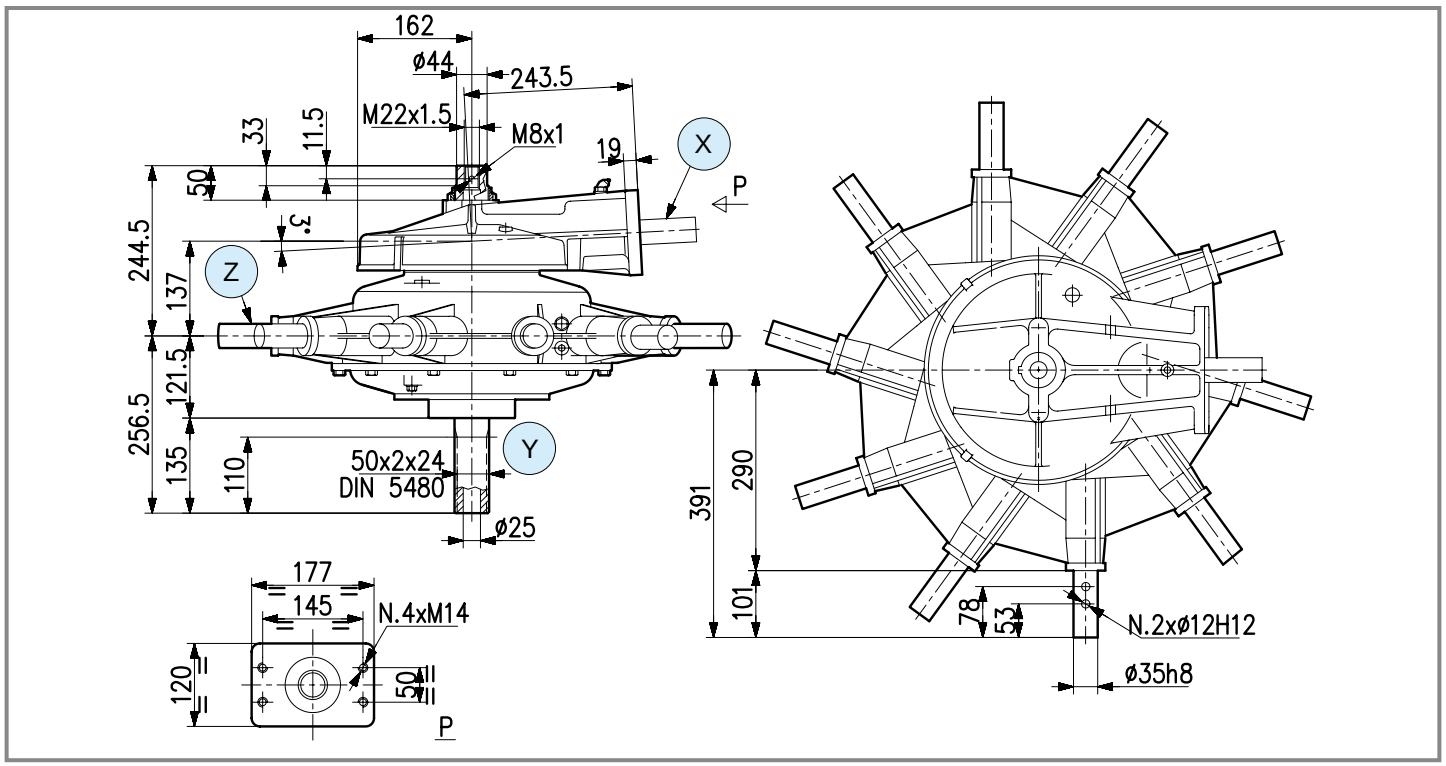

	i	N_1 [rpm]	M_2 [Nm]	nr. Arms	ø Rotor [m]	Shaft type X	Shaft type Y	Shaft type Z	Input	Code	Mounting	Direction	Note	
R	**8.20**	540	210	10	3.0	1 — 1" 3/8 Z6	26 — 50x2x24 DIN5480	24 — ø 35, n.1 ø12	X	9.794.005	201	SX	single rotor	std
	8.10	540	210	10	3.0	1 — 1" 3/8 Z6	26 — 50x2x24 DIN5480	24 — ø 35, n.1 ø12	X	9.794.006	201	SX	double rotor	std
	8.20	540	210	10	3.0	1 — 1" 3/8 Z6	26 — 50x2x24 DIN5480	24 — ø 35, n.1 ø12	X	9.794.007	201	DX	double rotor	std

K-795T

Code **795**

(4.02)

[kg] 186 | [l] -

Per configurazioni non a catalogo contattare Servizio Tecnico-Commerciale
For non-catalog configurations contact Technical-Commercial Service

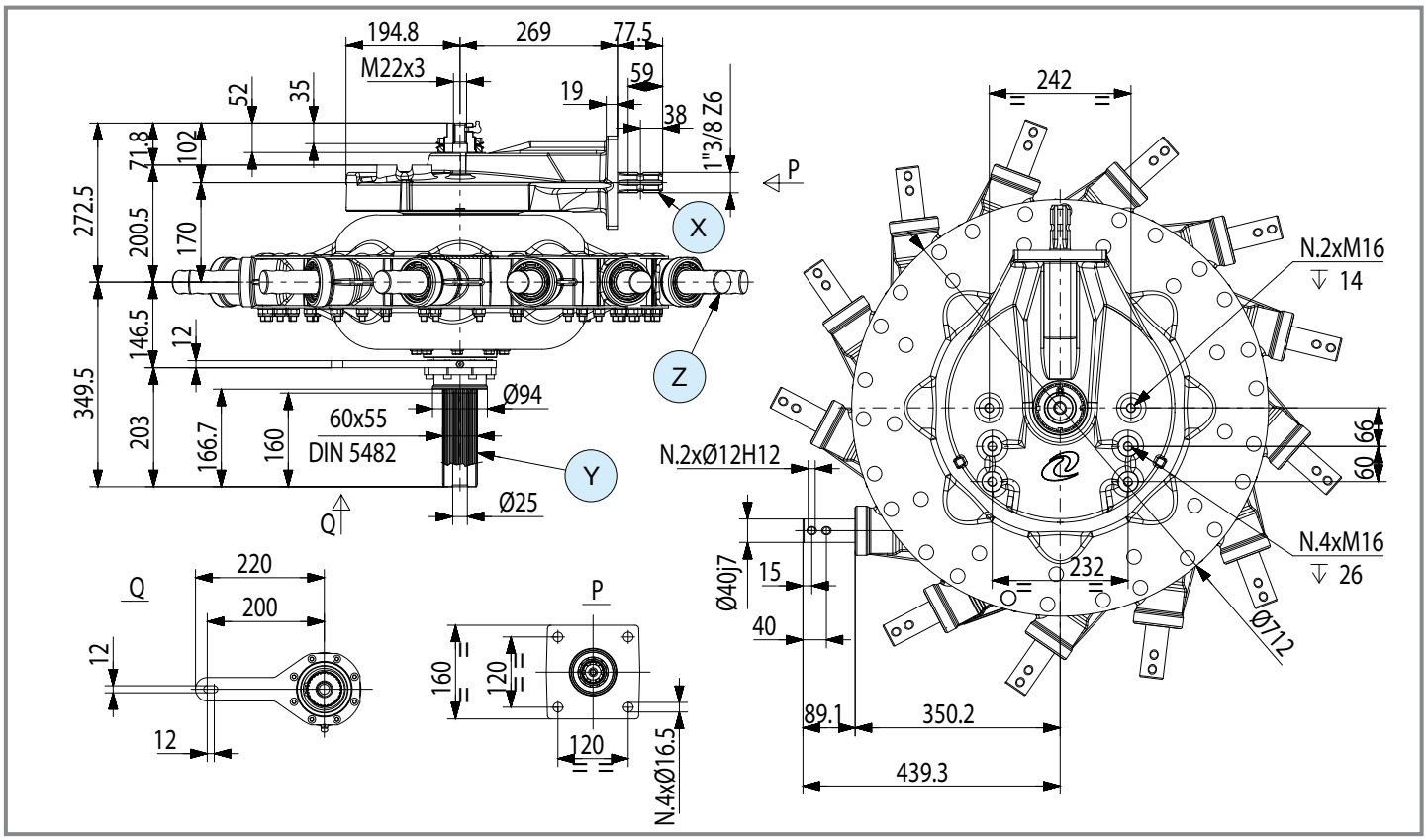

	i	N_1 [rpm]	M_2 [Nm]	nr. Arms	ø Rotor [m]	Shaft type X	Shaft type Y	Shaft type Z	Input	Code	Mounting	Direction	Note	
R	**9.70**	540	200	13	4.2	1 — 1" 3/8 Z6	42 — 60x55 DIN5482	28 — ø 40, n.2 ø12	X	9.795.102	201	SX	single rotor	std
	9.20	540	210	13	4.2	1 — 1" 3/8 Z6	42 — 60x55 DIN5482	28 — ø 40, n.2 ø12	X	9.795.112	201	SX	double rotor	std
	9.20	540	210	13	4.2	1 — 1" 3/8 Z6	42 — 60x55 DIN5482	28 — ø 40, n.2 ø12	X	9.795.113	201	DX	double rotor	std

K-799A

Code **799**

(4.02)

[kg] 130 | [l] -

Per configurazioni non a catalogo contattare Servizio Tecnico-Commerciale
For non-catalog configurations contact Technical-Commercial Service

Disponibile versione Dx e Sx.
Available Lh and Rh version.

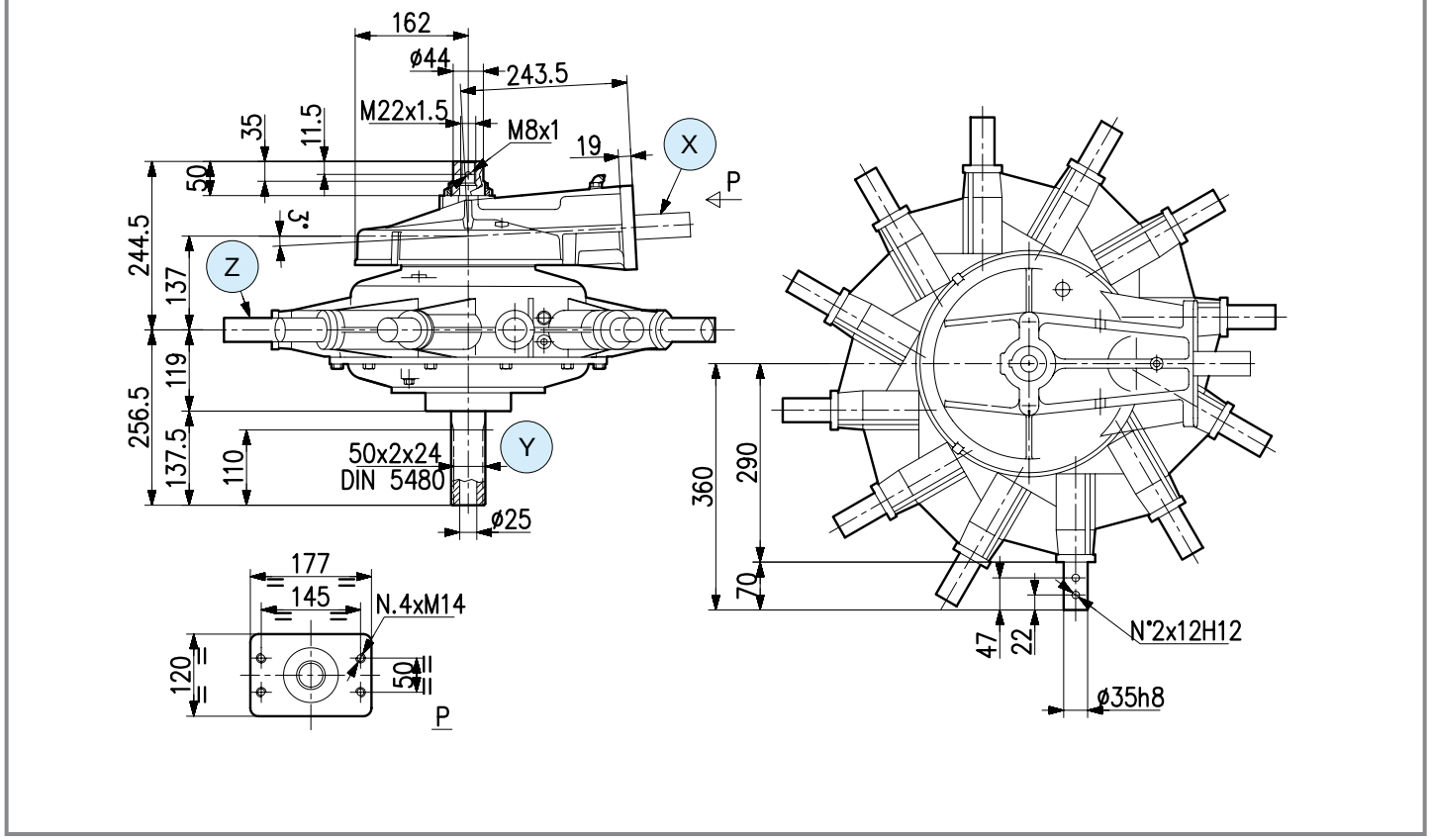

	i	N_1 [rpm]	M_2 [Nm]	nr. Arms	ø Rotor [m]	Shaft type X	Shaft type Y	Shaft type Z	Input	Code	Mounting	Direction	Note	
R	**8.10**	540	210	12	3.6	1 — 1" 3/8 Z6	23 — L 137.5, ø 50	24 — ø 35, n.1 ø12	X	9.799.106	201	SX	single rotor	std
	8.10	540	210	12	3.6	1 — 1" 3/8 Z6	23 — L 137.5, ø 50	24 — ø 35, n.1 ø12	X	9.799.112	201	SX	double rotor	std
	8.10	540	210	12	3.6	1 — 1" 3/8 Z6	23 — L 137.5, ø 50	24 — ø 35, n.1 ø12	X	9.799.113	201	DX	double rotor	std

Y-890A

Code **890**

(4.02)



[kg] 39 | [l] -

Per configurazioni non a catalogo contattare Servizio Tecnico-Commerciale
For non-catalog configurations contact Technical-Commercial Service

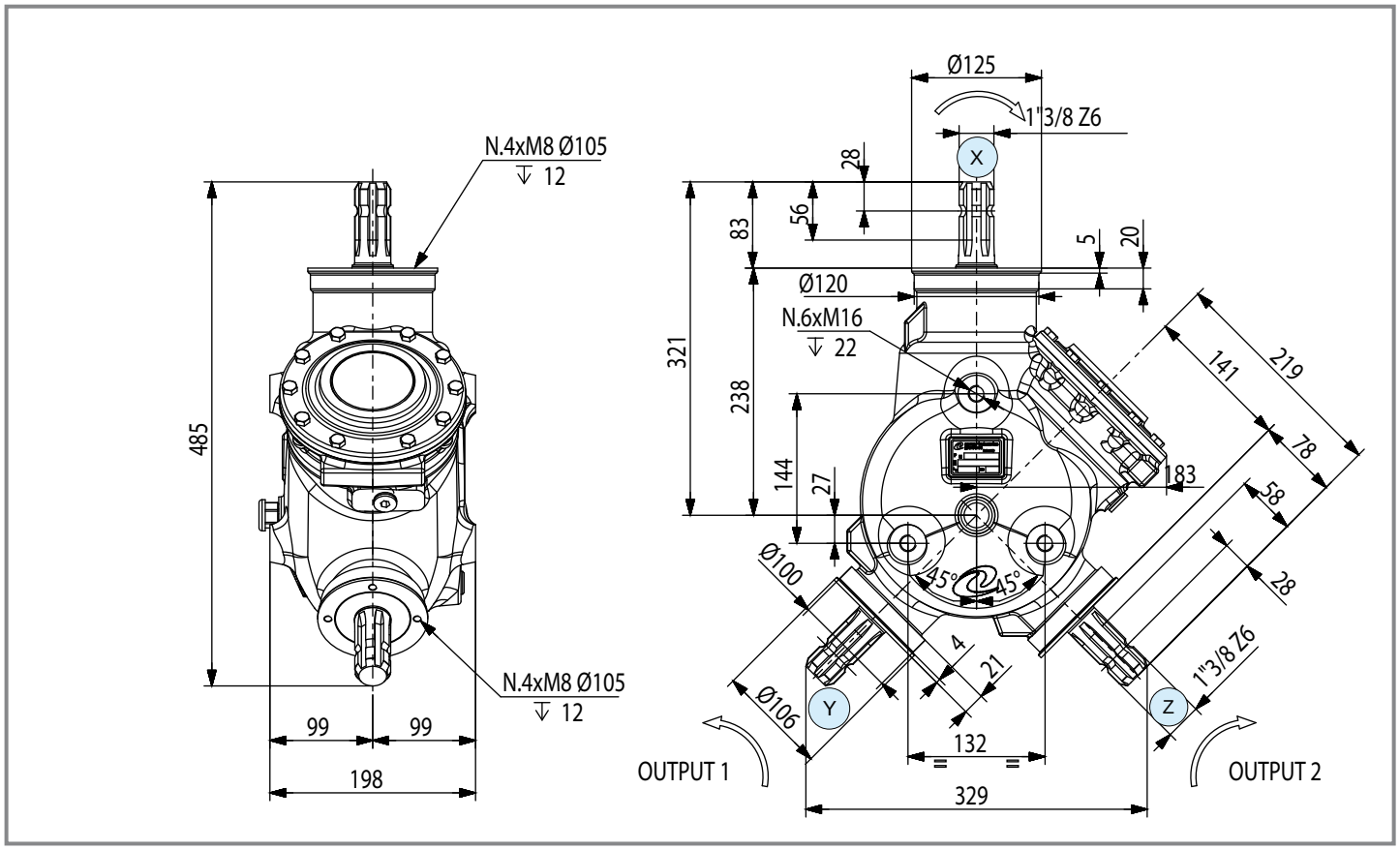

	i	N_1 [rpm]	M_2 [Nm]	Shaft type X	Shaft type Y	Shaft type Z	Input	Code	Mounting	Direction	Note	
M	**1.25**	540	343	1 1" 3/8 Z6	1 1" 3/8 Z6	1 1" 3/8 Z6	X	9.890.001	-	-	-	std
-	**1.00**	540	429	1 1" 3/8 Z6	1 1" 3/8 Z6	1 1" 3/8 Z6	X	9.890.002	-	-	-	std
R	**1.25**	540	536	1 1" 3/8 Z6	1 1" 3/8 Z6	1 1" 3/8 Z6	X	9.890.003	-	-	-	std

TB-318J

Code **318.8**

(4.05)

[kg] 25 | [l] 1.2

Per configurazioni non a catalogo contattare Servizio Tecnico-Commerciale
For non-catalog configurations contact Technical-Commercial Service

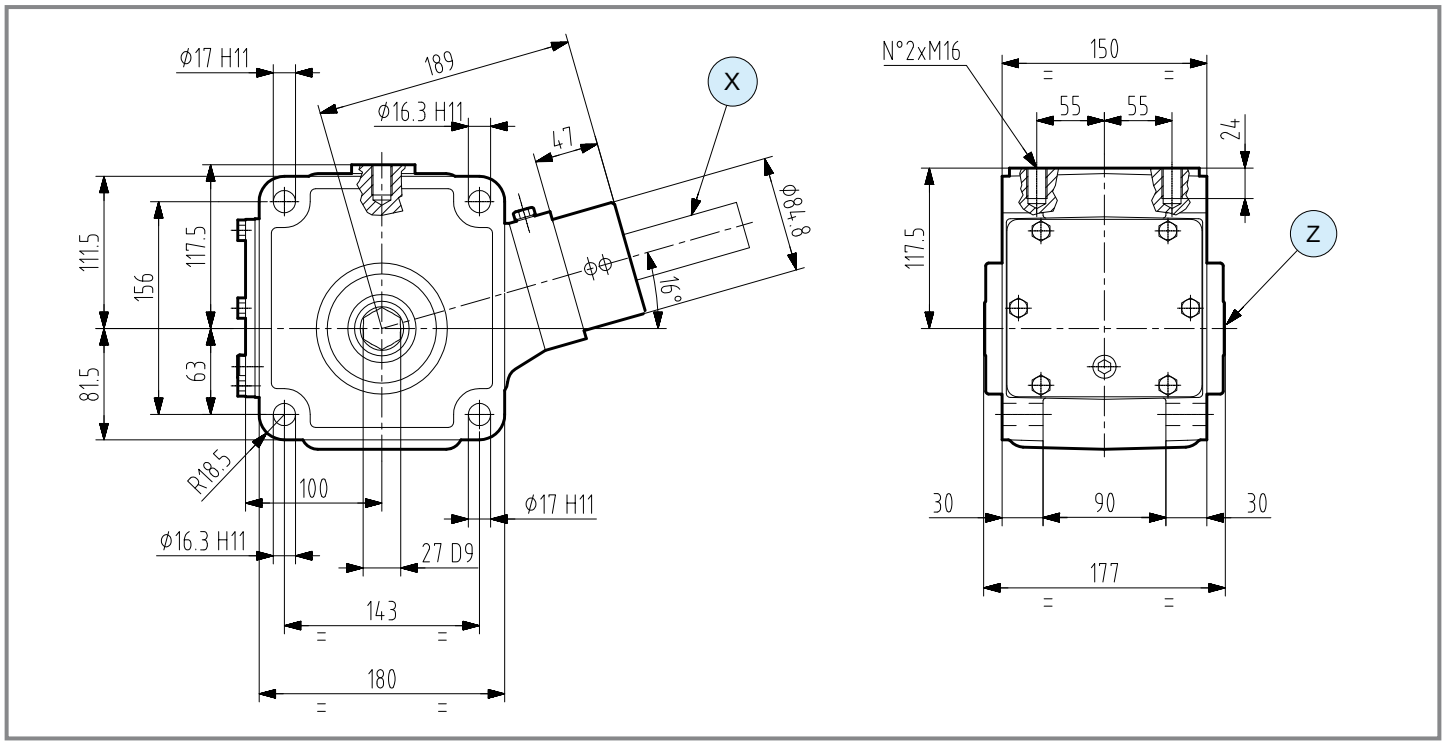

	i	N_1 [rpm]	P_1 [kW]	M_2 [Nm]	Shaft type X	Shaft type Y	Shaft type Z	Input	Code	Mounting	Note	
R	**1.77**	540	20	607	1 — 1" 3/8 Z6	-	64 — 27	X	9.318.800	5 6	-	std
	1.77	540	20	607	1 — 1" 3/8 Z6	-	64 — 27	X	9.318.802	5 6	-	std

TB-319J

Code **319.8**

(4.05)

[kg] 19 | [l] -

Per configurazioni non a catalogo contattare Servizio Tecnico-Commerciale
For non-catalog configurations contact Technical-Commercial Service

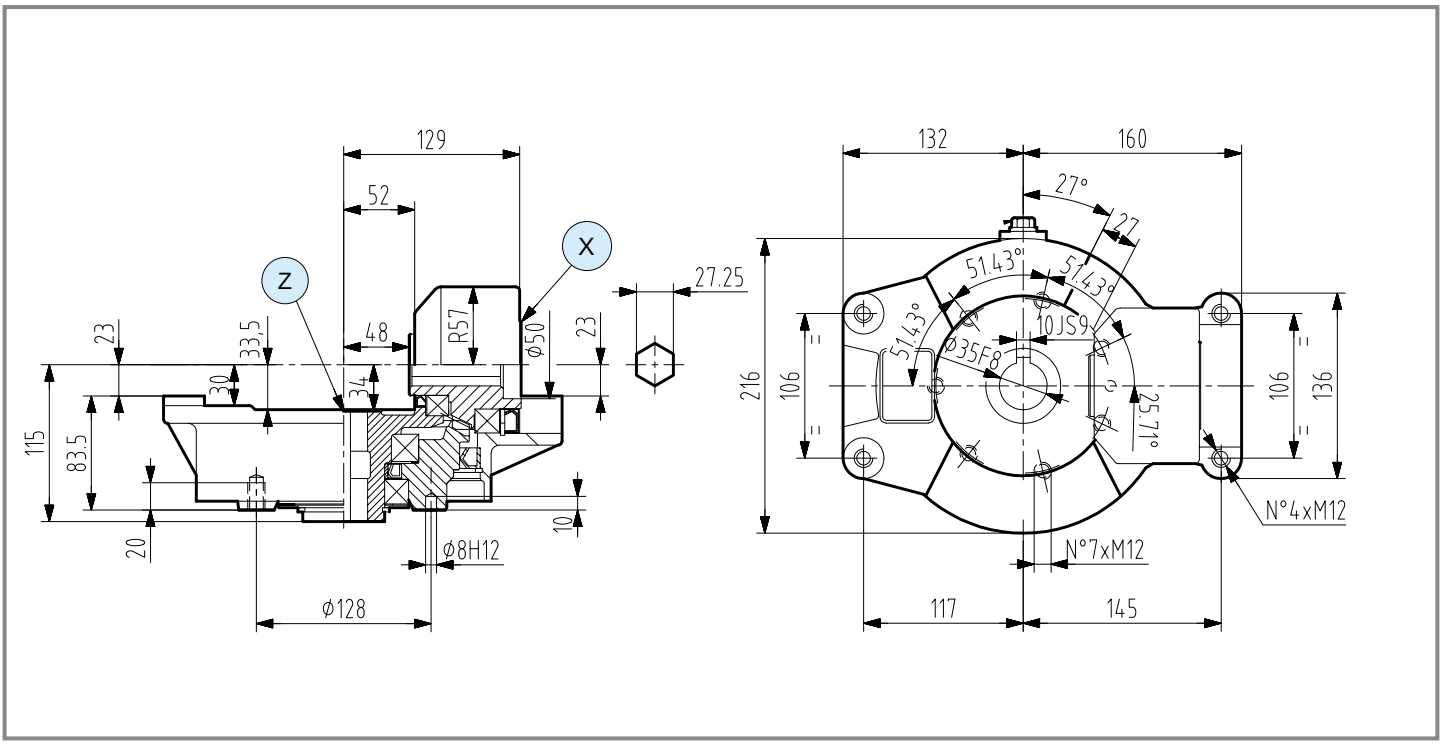

	i	N_1 [rpm]	P_1 [kW]	M_2 [Nm]	Shaft type X	Y	Z	Input	Code	Mounting	Note	
R	**2.00**	540	6.6	226	65 27.25	-		X	9.319.800	1 2	-	std
	2.00	540	6.6	226	65 27.25	-		X	9.319.801	1 2	-	std

TB-320A

Code **320**

(4.05)

[kg] 28 | [l] 2.0

Per configurazioni non a catalogo contattare Servizio Tecnico-Commerciale
For non-catalog configurations contact Technical-Commercial Service

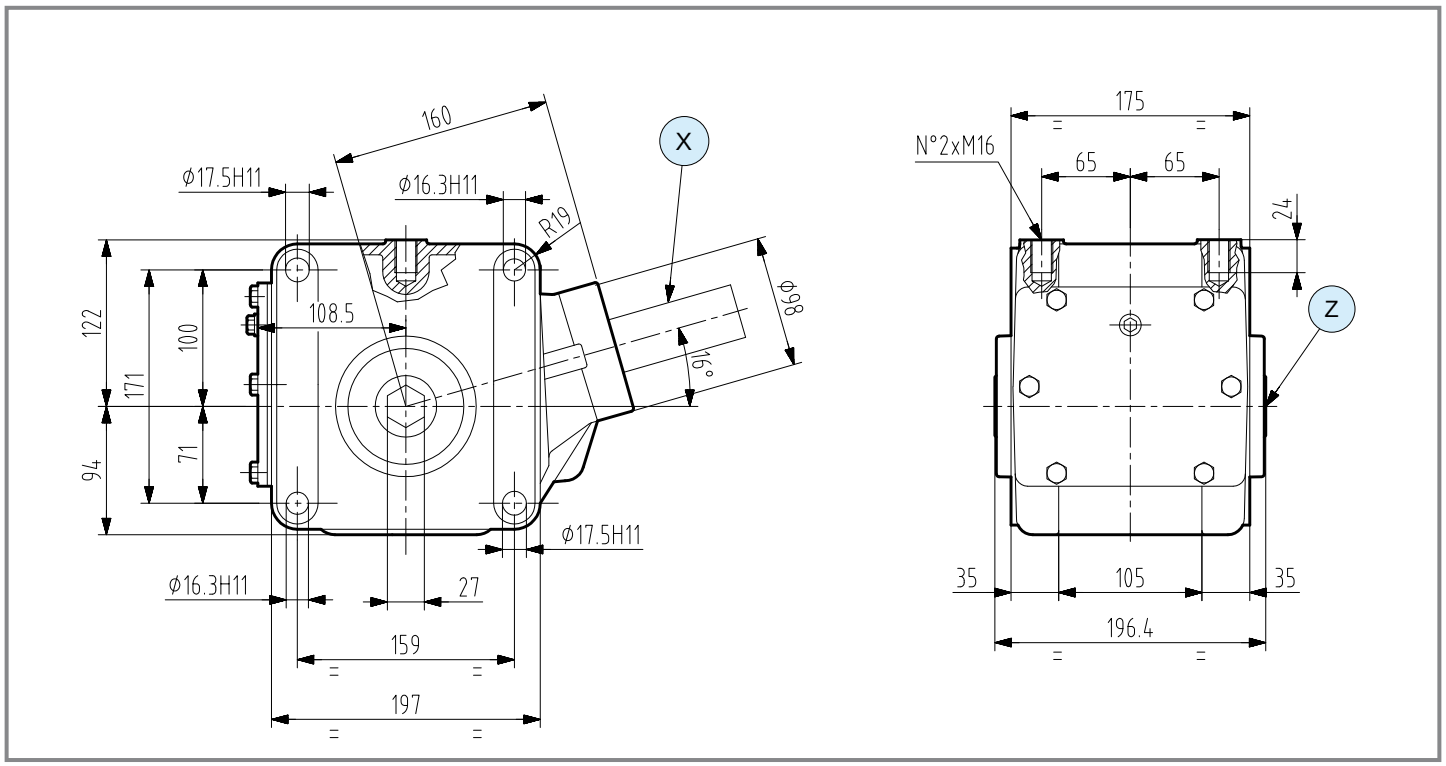

	i	N_1 [rpm]	P_1 [kW]	M_2 [Nm]	Shaft type X	Shaft type Y	Shaft type Z	Input	Code	Mounting	Note	
R	**1.77**	540	33	1002	1 — 1" 3/8 Z6	-	64 — 27	X	9.320.003	5 6	-	std

TB-323J

Code **323.8**

(4.05)

[kg] 14.5 | [l] 0.75

Per configurazioni non a catalogo contattare Servizio Tecnico-Commerciale
For non-catalog configurations contact Technical-Commercial Service

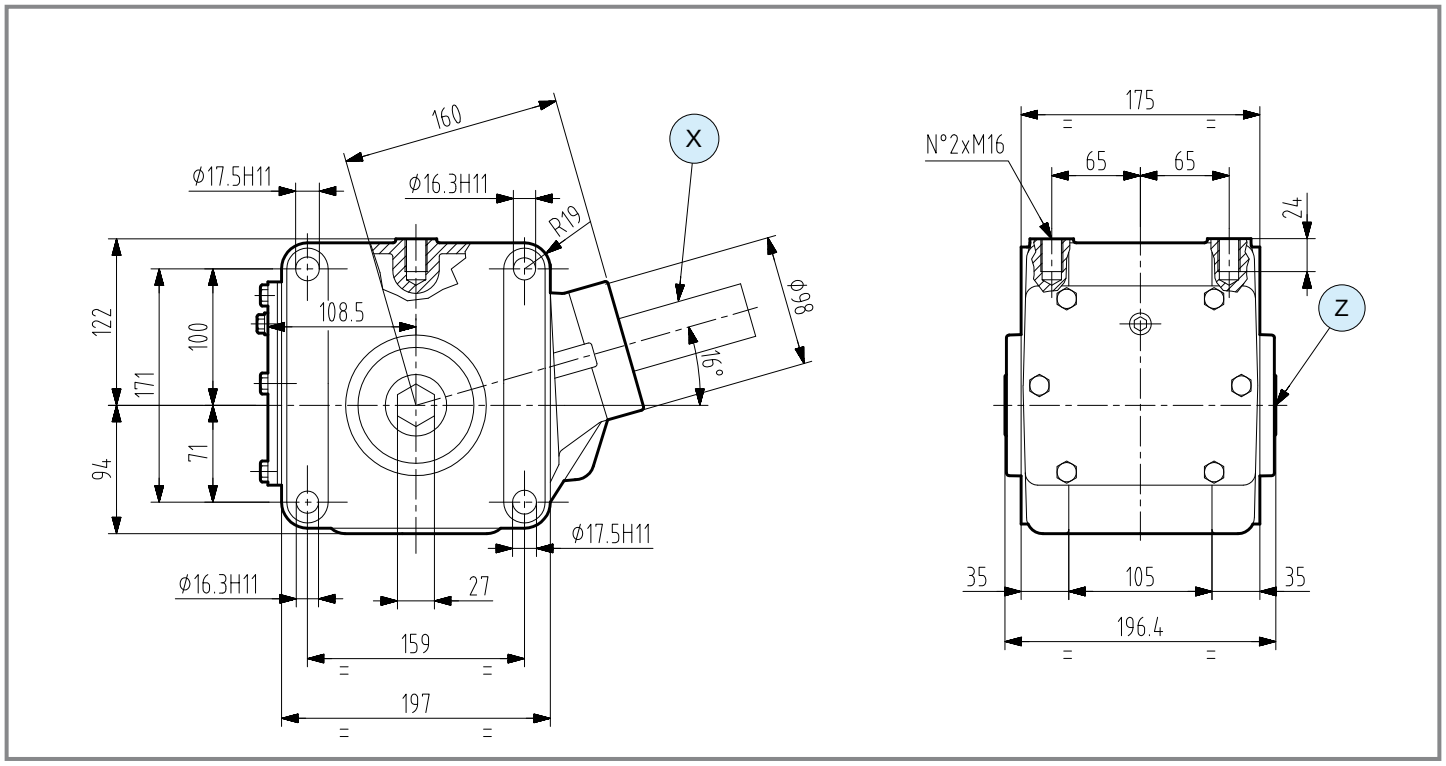

	i	N_1 [rpm]	P_1 [kW]	M_2 [Nm]	Shaft type X	Y	Z	Input	Code	Mounting	Note	
R	**1.54**	540	14	370	1 — 1" 3/8 Z6	-	65 — 24	X	9.323.802	1 2	-	std
	1.69	540	14	406	1 — 1" 3/8 Z6	-	65 — 24	X	9.323.801	1 2	-	std

LB-324J

Code **324.8**

(4.05)

[kg] 14.2 | [l] -

Per configurazioni non a catalogo contattare Servizio Tecnico-Commerciale
For non-catalog configurations contact Technical-Commercial Service

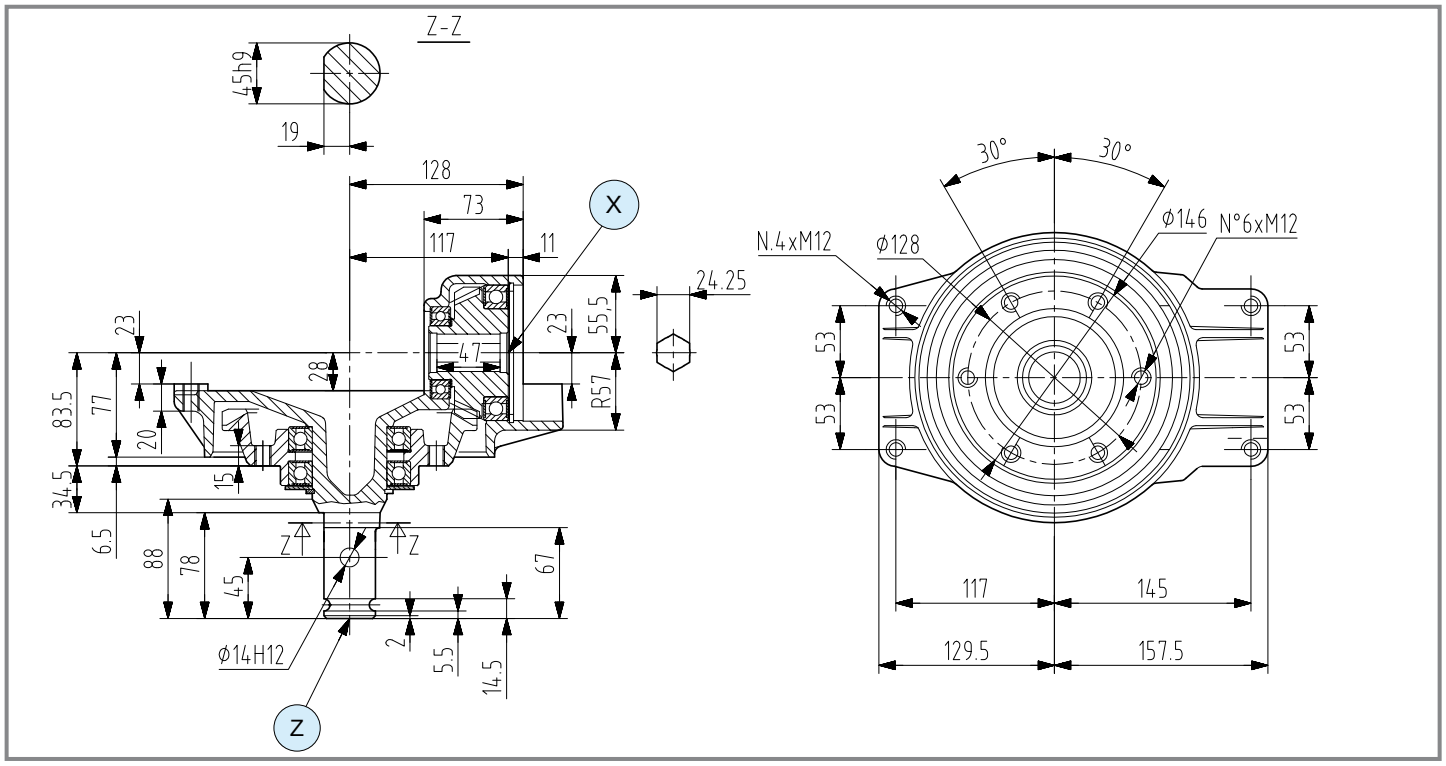

	i	N_1 [rpm]	P_1 [kW]	M_2 [Nm]	Shaft type X	Y	Z	Input	Code	Mounting	Note	
R	**1.54**	540	14	370	66 24.25	-		X	9.324.803	1 2	-	std
	2.00	540	6	206	66 24.25	-		X	9.324.800	1 2	-	std

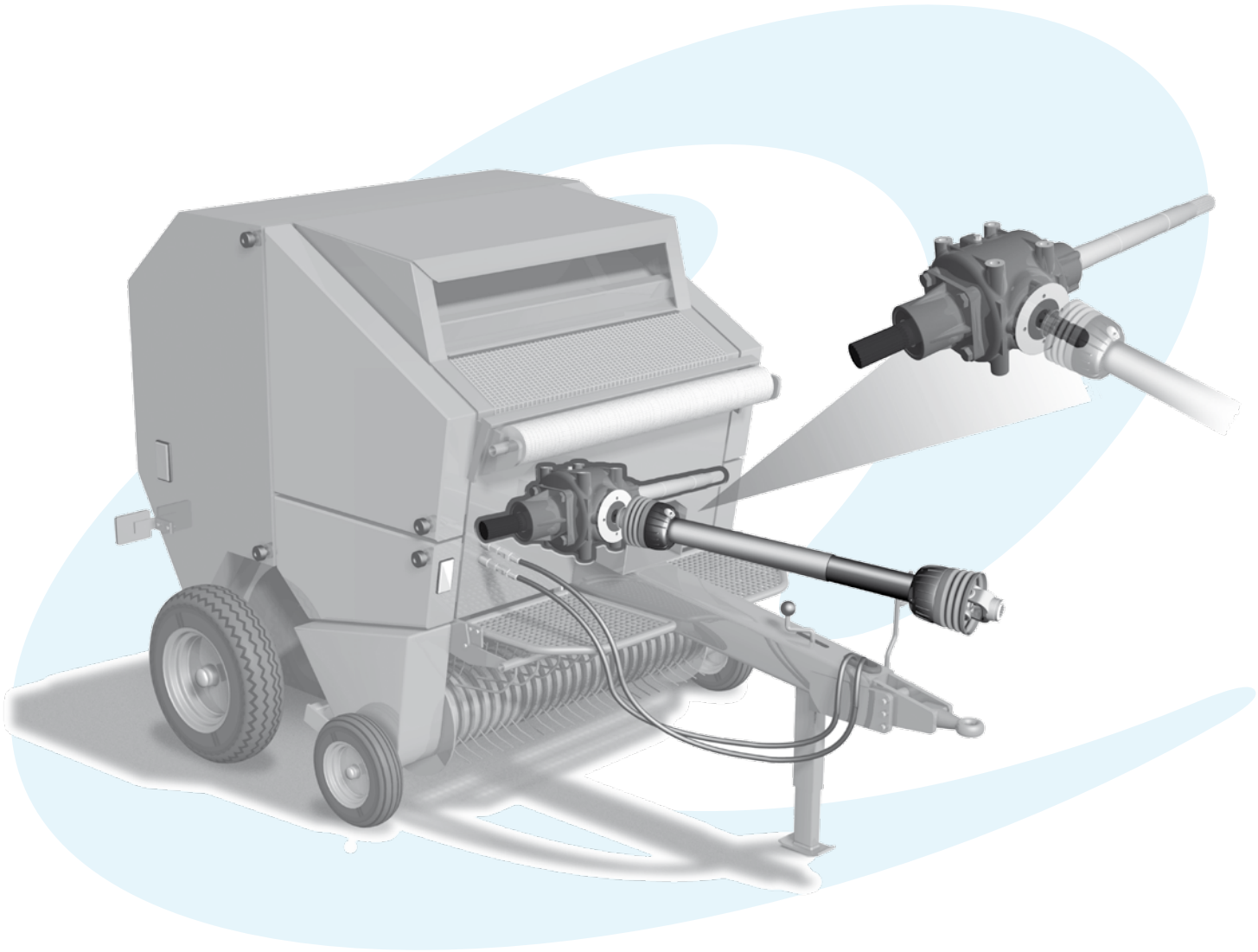

	i	$P_{1\text{ - max}}$ [kW]	$M_{2\text{ - max}}$ [Nm]	Tipologia alberi disponibili *Available type of shafts*	p.
T-304A	M + **-** - = = - R + 1.93	28	925		206
T-292E	M + - - = = - R + 1.86	-	47.7	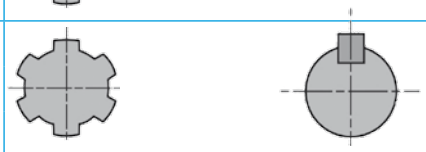	207
T-290HD	M + - - = = - R + 1.63÷3.00	78	2180	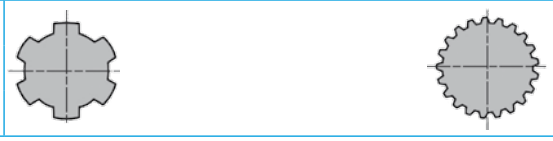	208

T-304A

Code **304**

(4.04)

[kg] 19 | [l] 1.1

Per configurazioni non a catalogo contattare Servizio Tecnico-Commerciale
For non-catalog configurations contact Technical-Commercial Service

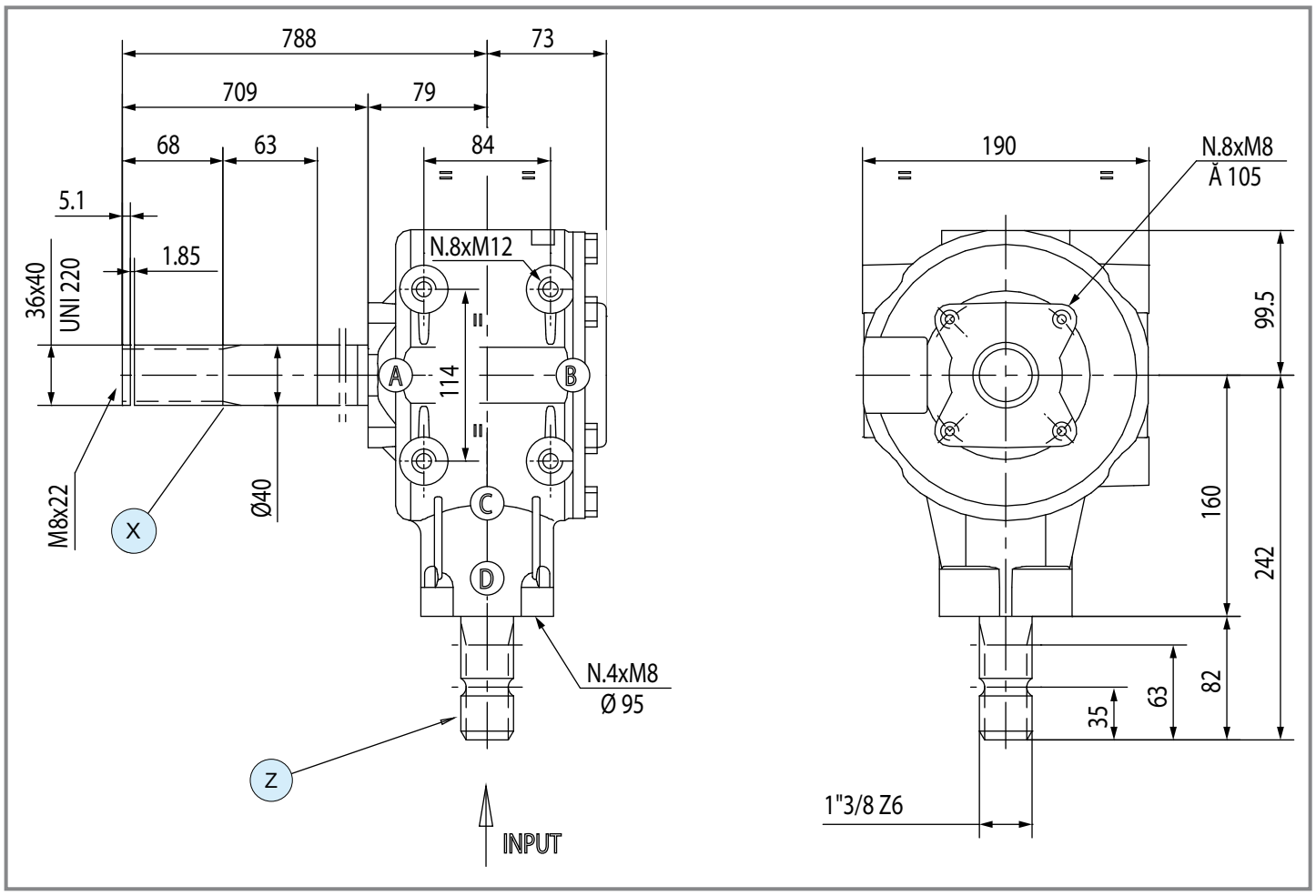

	i	N_1 [rpm]	P_1 [kW]	M_2 [Nm]	Shaft type X	Y	Z	Input	Code	Mounting	Note	
R	**1.93**	540	28	925	7 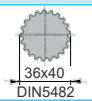 36x40 DIN5482	-	1  1" 3/8 Z6	Z	9.304.216	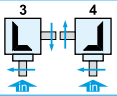	-	std

comer industries

T-292E

Code **292**

(4.04)

[kg] 74.8 | [l]

Per configurazioni non a catalogo contattare Servizio Tecnico-Commerciale
For non-catalog configurations contact Technical-Commercial Service

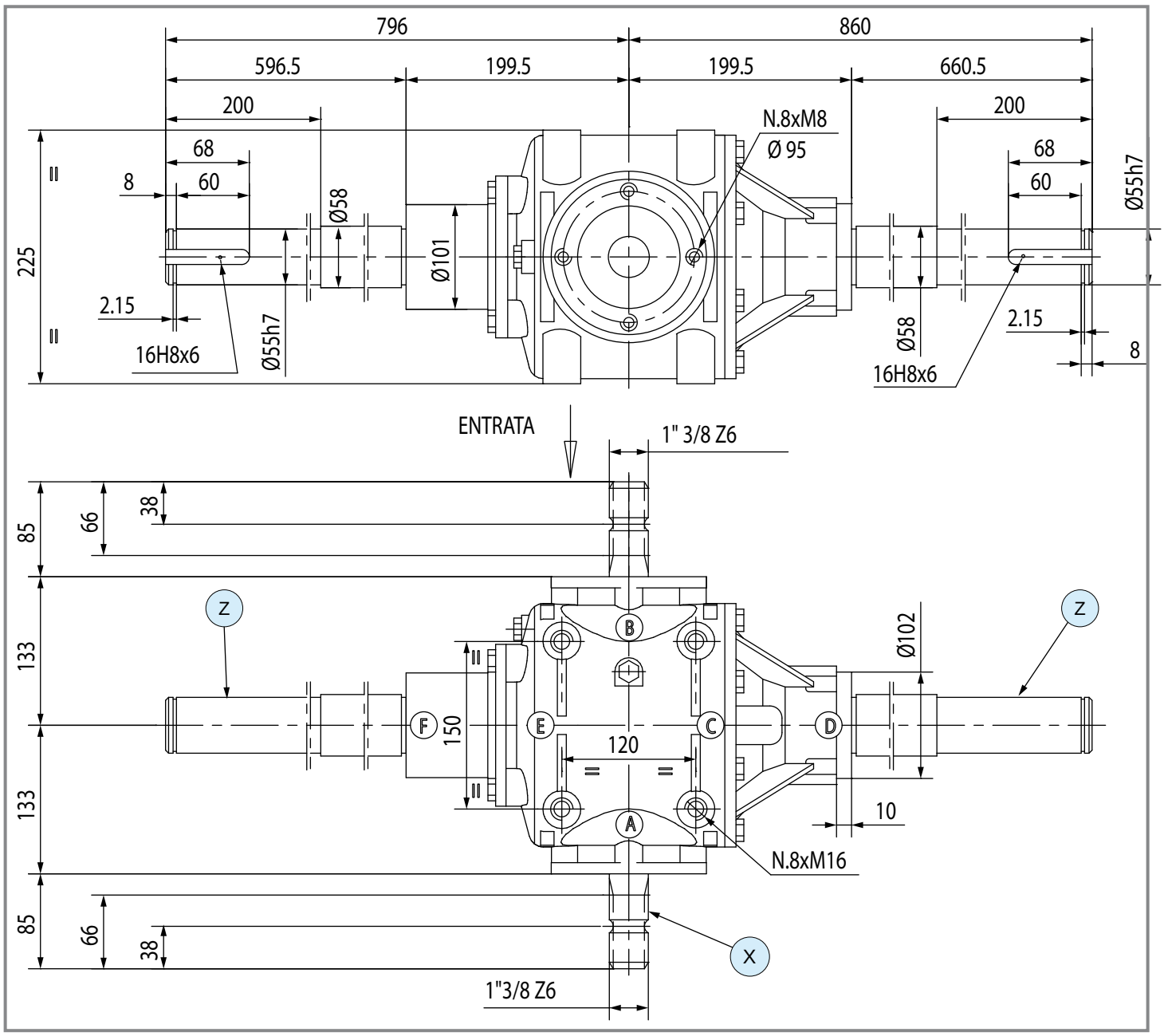

	i	N_1 [rpm]	P_1 [kW]	M_2 [Nm]	Shaft type X	Shaft type Y	Shaft type Z	Input	Code	Mounting	Note	
R	**1.86**	540	47.7	-	1 — 1" 3/8 Z6	49 — L 200 — ø 55	49 — L 200 — ø 55	X	9.292.305	-	-	std

T-290HD

Code **290**

(4.04)

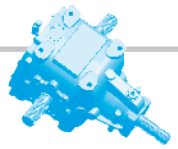

[kg] 41 | [l] 2.3

Per configurazioni non a catalogo contattare Servizio Tecnico-Commerciale
For non-catalog configurations contact Technical-Commercial Service

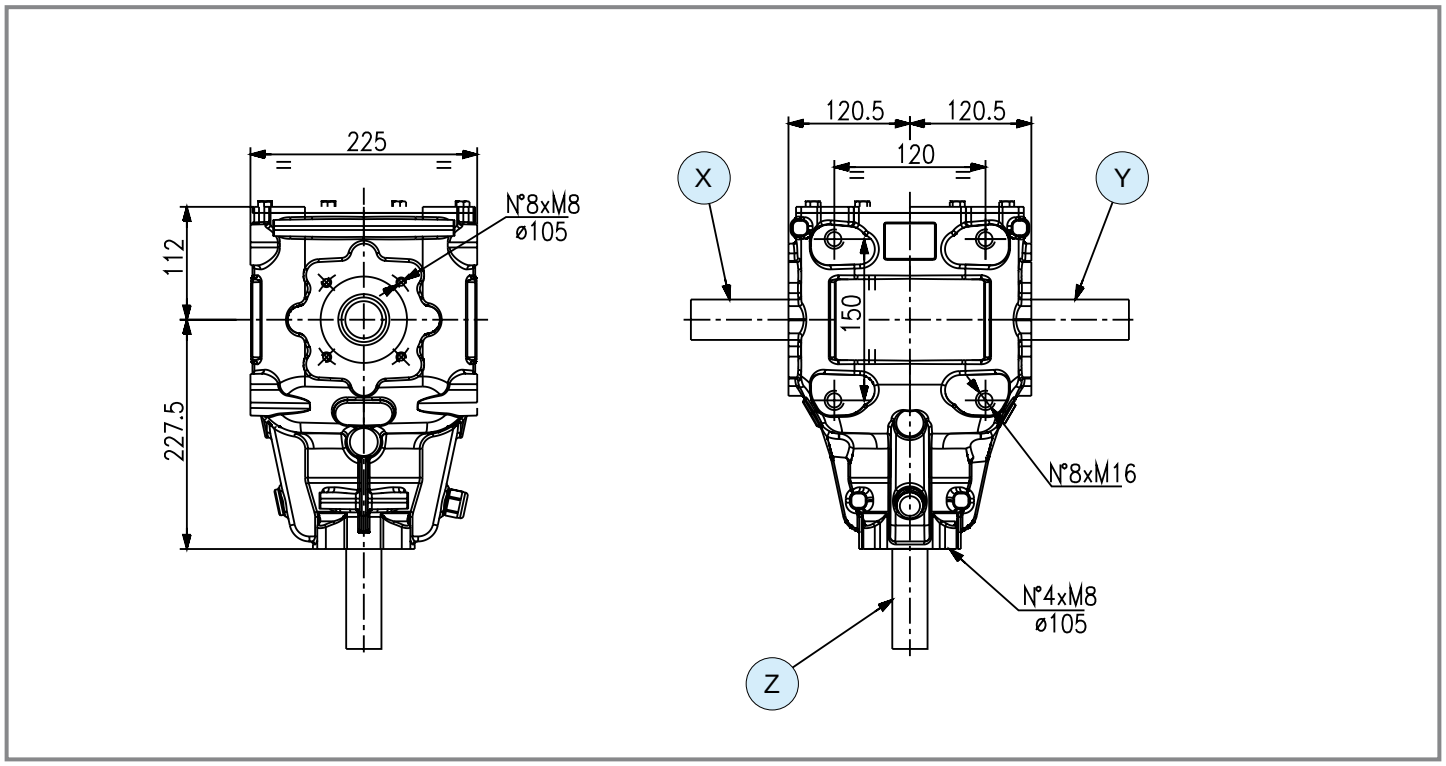

	5 - Rinforzato / *Reinforced*												
	i	N_1 [rpm]	P_1 [kW]	M_2 [Nm]	Shaft type X	Shaft type Y	Shaft type Z	Input	Option	Code	Mounting	
R	**1.63**	540	78	2180	[8] 40x2x18 DIN5480	[8] 40x2x18 DIN5480	[1] 1" 3/8 Z6	Z	5	9.290.100	5 6	std
R	**3.00**	1000	58	1694	[8] 40x2x18 DIN5480	[8] 40x2x18 DIN5480	[1] 1" 3/8 Z6	Z	5	9.290.102	5 6	special

Questa pagina è lasciata intenzionalmente bianca
This page is intentionally left blank

CARRI MISCELATORI E LANCIA PAGLIA
FEED MIXER MACHINES AND STRAW BLOWER

(4.06) (4.09)

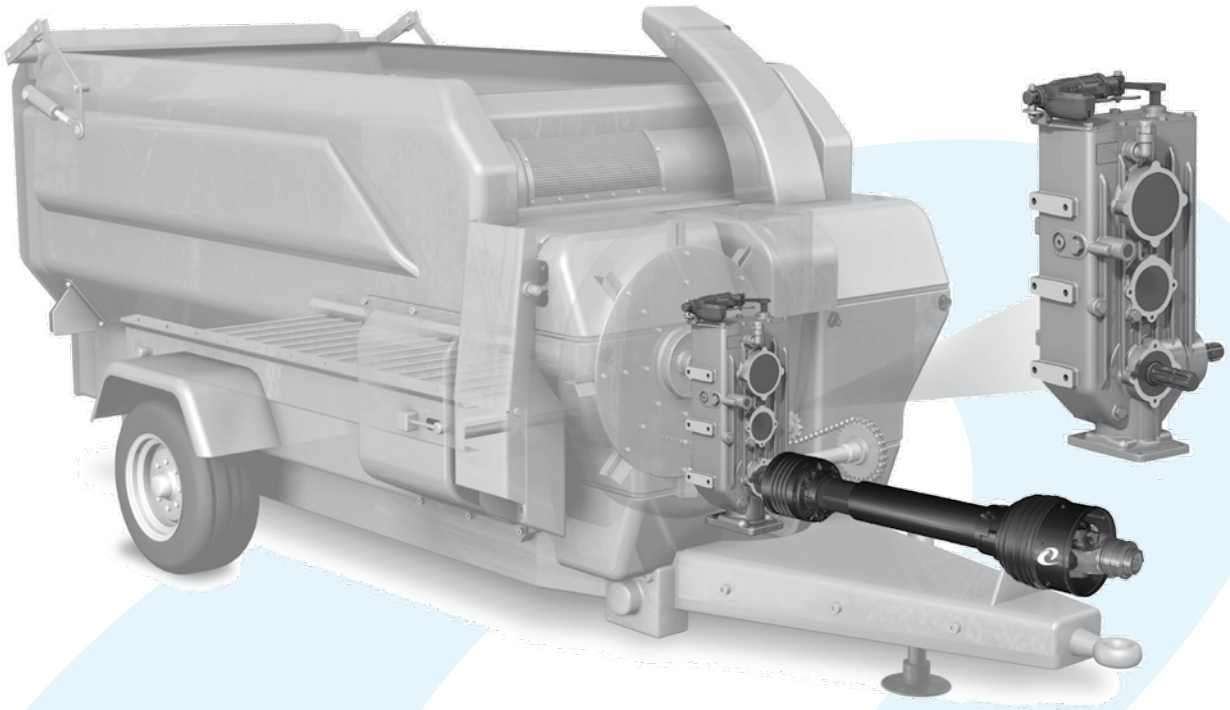

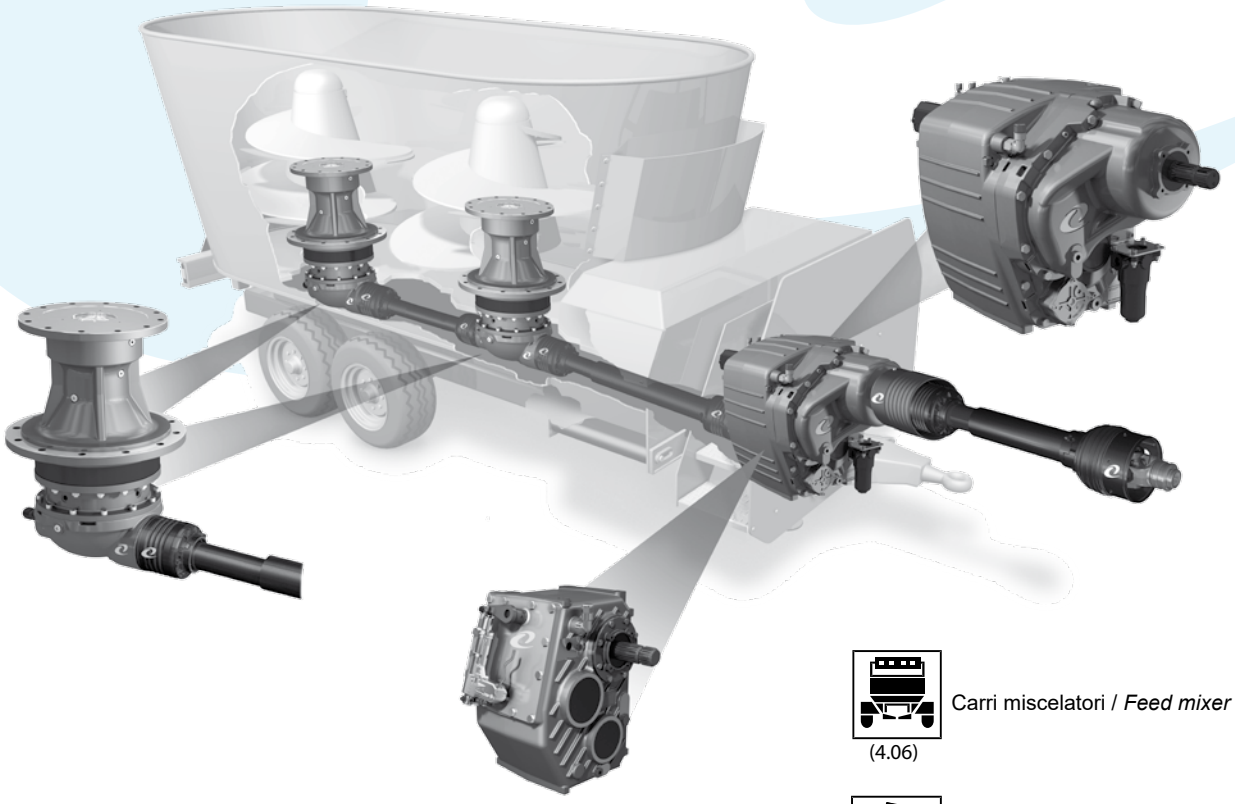

(4.06) Carri miscelatori / *Feed mixer machines*

(4.09) Lancia paglia / Straw Blower

Per configurazioni non a catalogo contattare Servizio Tecnico-Commerciale
For non-catalog configurations contact Technical-Commercial Service

	i	$P_{1\text{ - max}}$ [kW]	$M_{2\text{ - max}}$ [Nm]	Tipologia alberi disponibili *Available type of shafts*	p.
DP-732B	M - - - R 1.00÷1.88	59.0	-		213
C-3A	M 1.00÷1.25 - - R 1.00÷3.26	110.3	-	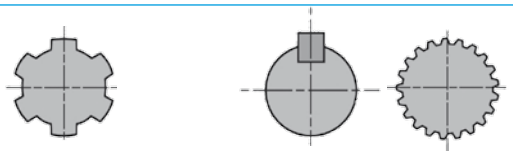	214
A-613R	M - - - R 1.00÷2.70	180.0	-	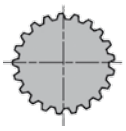	216
A-614R	M - - 1.00 R 1.80÷3.20	186.5	5650	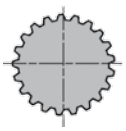	217
PGA-502	M - - - R 15.51	-	3810	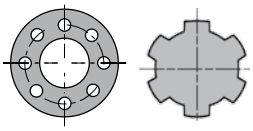	218
N-673J	M - - - R 10.80÷15.00	55.1	10206	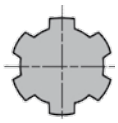	220
PGA-1202	M - - - R 13.90÷19.40	-	12800		221
PGA-1602	M - - - R 16.13÷21.10	-	15700		222

	i	$P_{1\text{ - max}}$ [kW]	$M_{2\text{ - max}}$ [Nm]	Tipologia alberi disponibili *Available type of shafts*	p.
PGA-1602 double	M - - - R 13.40÷21.10	-	17000		223
PGA-1603	M - - - R 25.89	-	20000		224
PGA-1603 Hyd. motor	M - - - R 50.00÷83.26		18020		225
PGA-2102 **PGA-2103**	M - - - R 13.56÷23.30	-	21000		226
PGA-2502	M - - - R 13.60÷19.60	-	23780		227
PGA-2503	M - - - R 72.00÷86.65	-	23780		228
PGA-3003	M - - - R 29.34÷35.40	-	30760		229
PGA-4203	M - - - R 31.60	-	142000		230
D-732A	M - - - R 1.00÷1.93	91.9	-		231

Per configurazioni non a catalogo contattare Servizio Tecnico-Commerciale
For non-catalog configurations contact Technical-Commercial Service

DP-732B

Code **732**

(4.06)

Per configurazioni non a catalogo contattare Servizio Tecnico-Commerciale
For non-catalog configurations contact Technical-Commercial Service

[kg] 62 | [l] 5.6

Disponibile con attuatore elettrico 2 e 3 posizioni.
Available with electric actuator 2 and 3 positions.

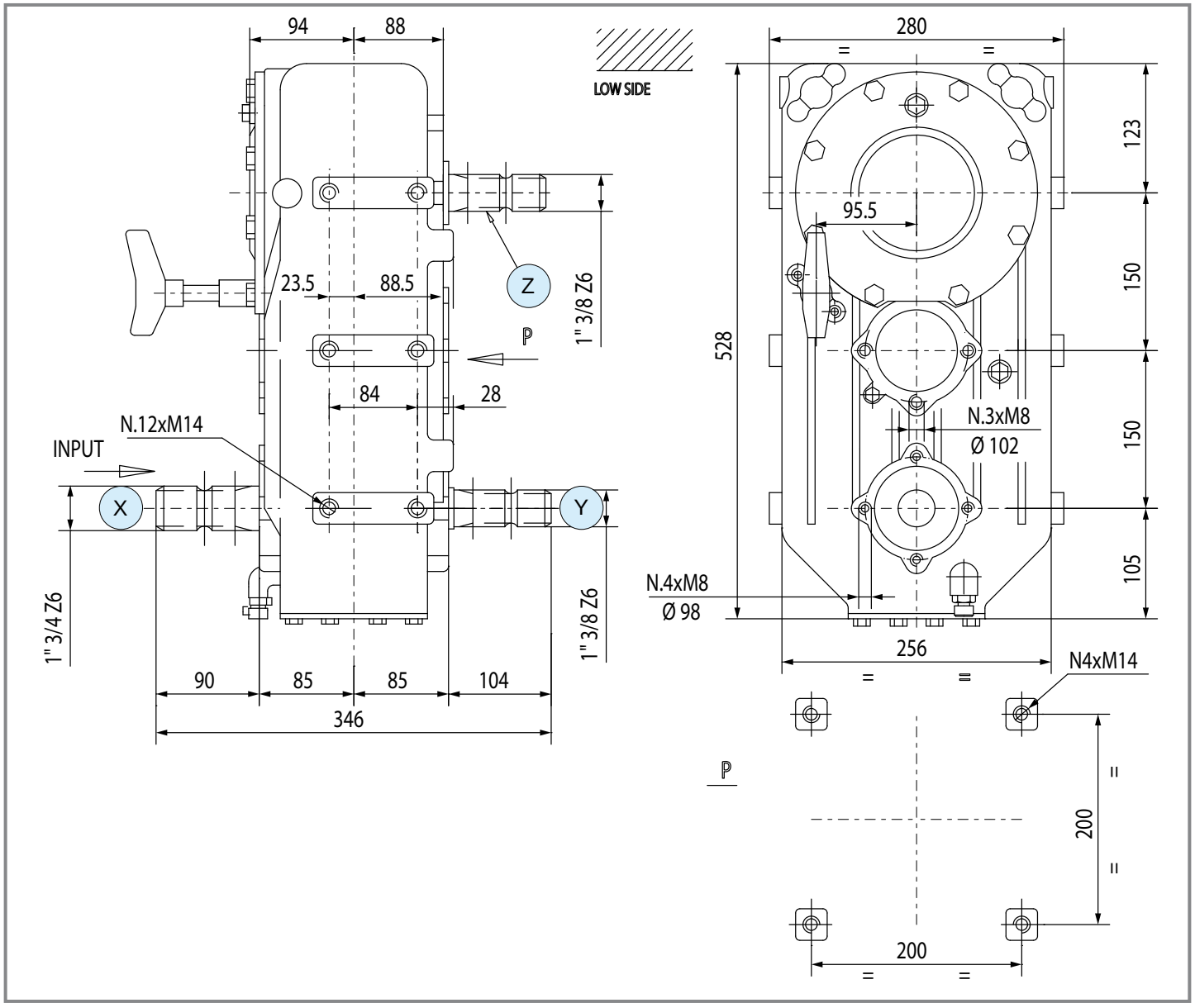

	i	N_1 [rpm]	P_1 [kW]	Shaft type X	Shaft type Y	Shaft type Z	Input	Features	Code	Mounting	
R	**1.00 1.41**	540	59.0	5 — 1" 3/4 Z6	1 — 1" 3/8 Z6	1 — 1" 3/8 Z6	X	-	9.732.346	231	std
R	**1.00 1.88**	540	59.0	6 — 1"3/4 Z20	-	1 — 1" 3/8 Z6	Z	A.P. APH - Ø22 CH6x6	9.732.347	231	std
	1.00 1.88	540	59.0	6 — 1"3/4 Z20	1 — 1" 3/8 Z6	5 — 1" 3/4 Z6	Z	-	9.732.376	231	std

C-3A

Code **5367**

(4.06)



[kg] 100 | [l] 9.3

Per configurazioni non a catalogo contattare Servizio Tecnico-Commerciale
For non-catalog configurations contact Technical-Commercial Service

Disponibile con attuatore idraulico o elettrico 3 posizioni.
Available with hydraulic or electric actuator 3 positions.

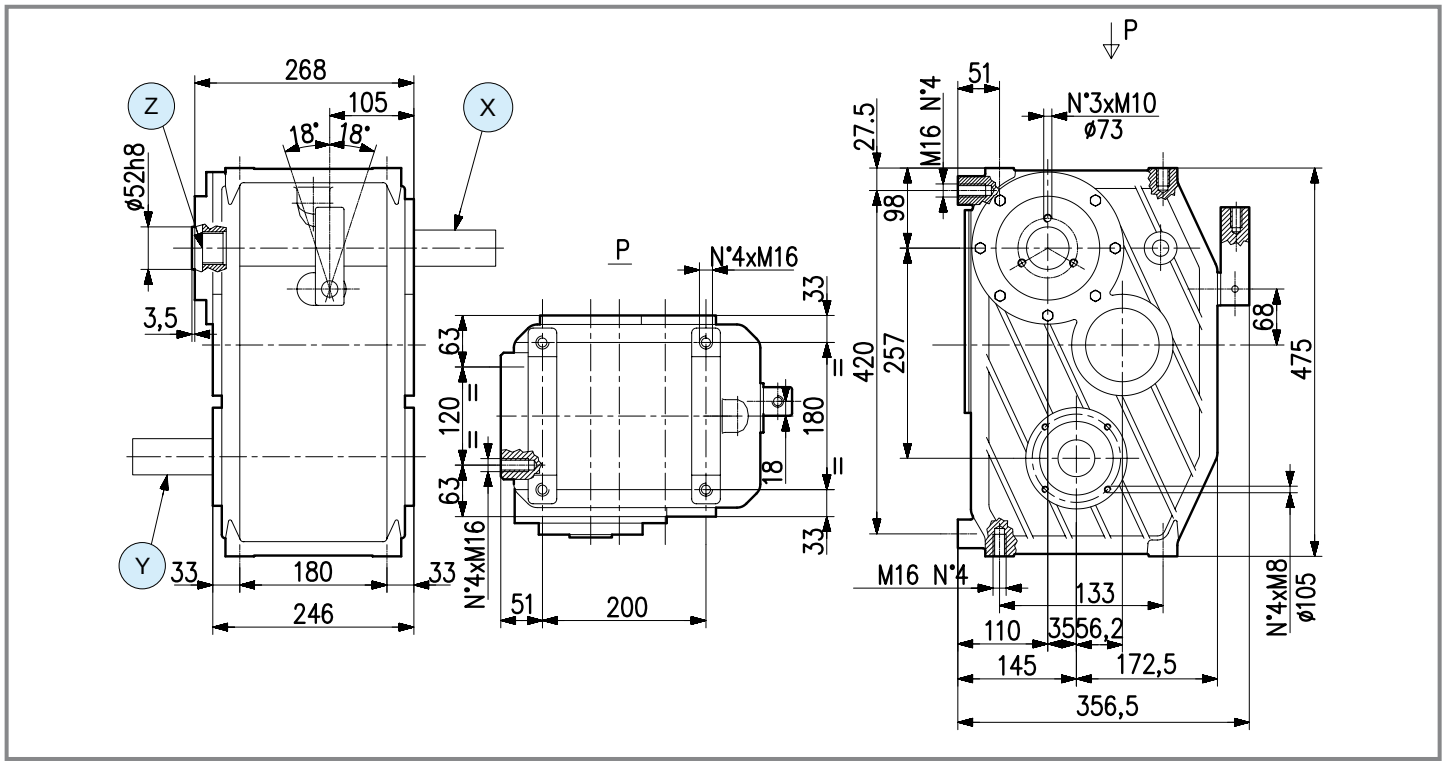

6 - Rinforzato / *Reinforced* 7 - Cambio facilitato / *Quick shift*

	i	N_1 [rpm]	P_1 [kW]	Shaft type X	Shaft type Y	Shaft type Z	Input	Option Z	Features	Code	Mounting	
	1.00 1.28	540	92.0	6 1"3/4 Z20	6 1"3/4 Z20	A.P. APH - 36x40 DIN	X	-	-	5367.005.013	-	std
	1.00 1.50	540	92.0	6 1"3/4 Z20	6 1"3/4 Z20	A.P. APH - 36x40 DIN	X	-	-	5367.008.015	-	std
R	**1.00 1.80**	540	92.0	1 1" 3/8 Z6	6 1"3/4 Z20	A.P. APH - 36x40 DIN	X	16 ø 22	-	5367.014.018	-	std
	1.00 1.80	540	92.0	6 1"3/4 Z20	6 1"3/4 Z20	A.P. APH - 36x40 DIN	X	-	-	5367.001.018	-	std
	1.00 1.80	540	92.0	1 1" 3/8 Z6	6 1"3/4 Z20	A.P. APH - 36x40 DIN	X	-	7	5367.129.018	-	std
	1.00 1.80	540	110.3	6 1"3/4 Z20	6 1"3/4 Z20	A.P. APH - 36x40 DIN	X	16 ø 22	6	5367.057.018	-	std

comer industries

C-3A

Code **5367**

(4.06)



6 - Rinforzato / *Reinforced*

	i	N_1 [rpm]	P_1 [kW]	Shaft type X	Shaft type Y	Shaft type Z	Input	Option Z	Features	Code	Mounting	
R	**1.00 1.80**	540	92.0	5 1" 3/4 Z6	6 1"3/4 Z20	A.P. SAE B - 36x40 DIN	X	-	-	5367.013.018	-	std
	1.28 2.30	540	92.0	5 1" 3/4 Z6	6 1"3/4 Z20	A.P. SAE B - 16/32 Z13	X	-	-	5367.026.023	-	special
	1.32 2.74	540	110.3	5 1" 3/4 Z6	5 1" 3/4 Z6	A.P. SAE B - 36x40 DIN	X	61 16/32" DP Z13	6	5367.117.027	-	special
	1.32 2.74	540	110.3	5 1" 3/4 Z6	5 1" 3/4 Z6	5 1" 3/4 Z6	X	-	6	5367.116.027	-	special
	1.51 2.73	1000	92.0	6 1"3/4 Z20	6 1"3/4 Z20	A.P. APH - 36x40 DIN	X	-	-	5367.042.027	-	std
	1.57 3.26	1000	110.3	5 1" 3/4 Z6	6 1"3/4 Z20	-	X	-	6	5367.101.032	-	special
	1.57 3.26	1000	110.3	6 1"3/4 Z20	6 1"3/4 Z20	A.P. APH - 36x40 DIN	X	-	6	5367.054.032	-	std
	1.80 2.73	540	110.3	6 1"3/4 Z20	6 1"3/4 Z20	A.P. APH - 36x40 DIN	X	-	6	5367.069.027	-	std
	1.80 3.20	1000	110.3	5 1" 3/4 Z6	5 1" 3/4 Z6	A.P. APH - 36x40 DIN	X	16 ø 22	6	5367.061.032	-	std
M/R	**1:1.05 2.18:1**	540	92.0	6 1"3/4 Z20	6 1"3/4 Z20	1 1" 3/8 Z6	X	-	-	5367.114.022	-	special
	1:1.25 1.67:1	540	110.3	6 1"3/4 Z20	6 1"3/4 Z20	A.P. APH - 36x40 DIN	X	-	6	5367.053.016	-	special

A-613R

Code **613**

(4.06)

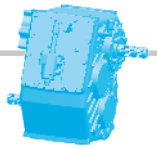

[kg] 105 | [l] -

Per configurazioni non a catalogo contattare Servizio Tecnico-Commerciale
For non-catalog configurations contact Technical-Commercial Service

Disponibile con attuatore idraulico o elettrico 3 posizioni.
Available with hydraulic or electric actuator 3 positions.

Ingranaggi Elicoidali.
Helical Gears.

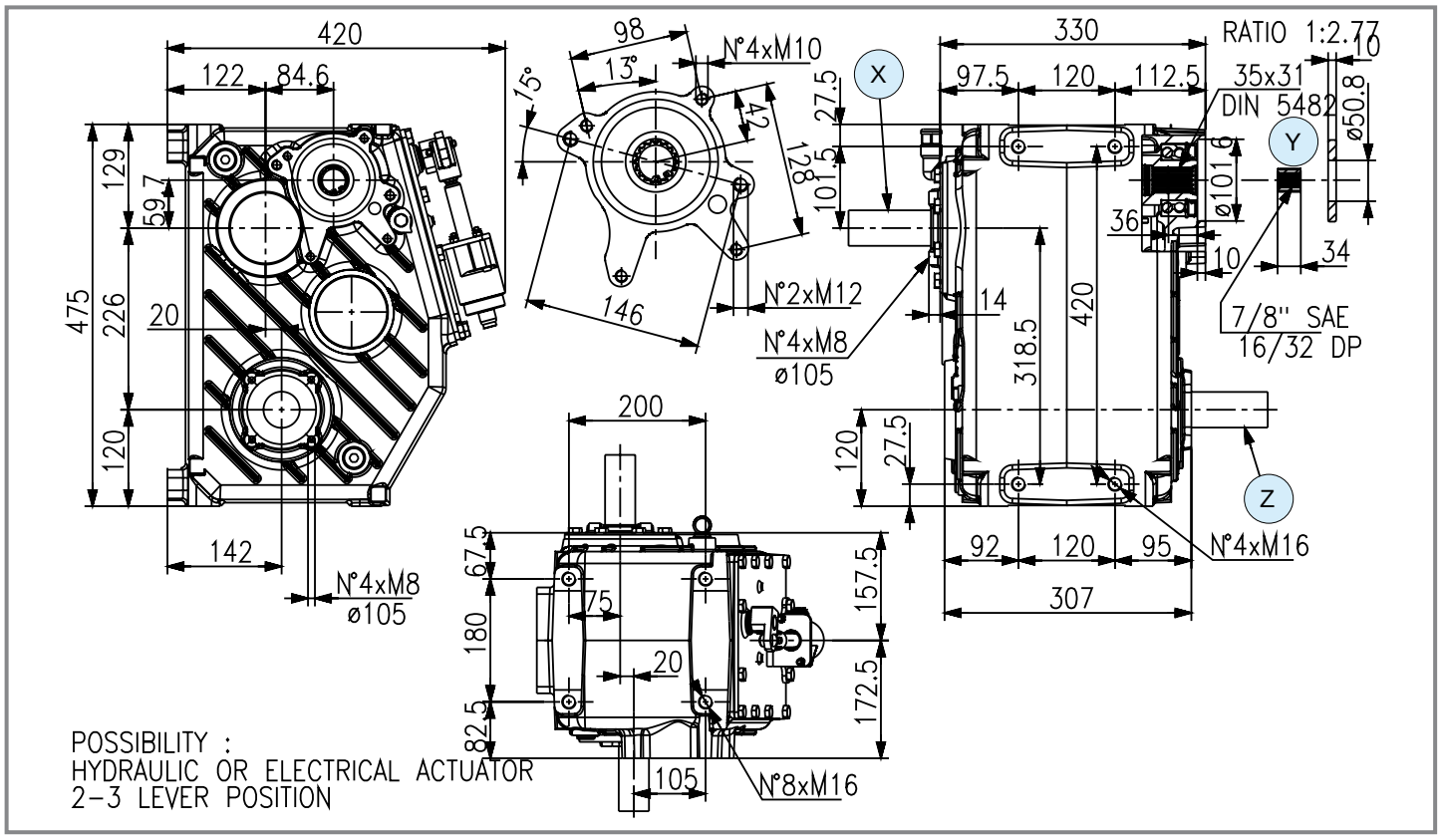

	i	N_1 [rpm]	P_1 [kW]	Shaft type X	Shaft type Y	Shaft type Z	Input	Option Y	Code	Mounting	
	1.00 1.30	540	132.0	6 1"3/4 Z20	SAE B/GR3 - 35x31 DIN	6 1"3/4 Z20	X	61 16/32" DP Z13	9.613.006	231	std
	1.00 1.50	540	132.0	6 1"3/4 Z20	SAE B/GR3 - 35x31 DIN	6 1"3/4 Z20	X	61 16/32" DP Z13	9.613.003	231	std
-/R	**1.00 1.50**	1000	180.0	6 1"3/4 Z20	SAE B/GR3 - 35x31 DIN	6 1"3/4 Z20	X	61 16/32" DP Z13		231	std
	1.00 1.80	540	132.0	6 1"3/4 Z20	SAE B/GR3 - 35x31 DIN	6 1"3/4 Z20	X	61 16/32" DP Z13	9.613.001	231	std
	1.00 1.80	1000	180.0	6 1"3/4 Z20	SAE B/GR3 - 35x31 DIN	6 1"3/4 Z20	X	61 16/32" DP Z13		231	std
R	**1.80 2.70**	1000	150.0	6 1"3/4 Z20	SAE B/GR3 - 35x31 DIN	6 1"3/4 Z20	X	61 16/32" DP Z13	9.613.004	231	std

A-614R

Code **614**

(4.06)

[kg] 255 | [l] -

Per configurazioni non a catalogo contattare Servizio Tecnico-Commerciale
For non-catalog configurations contact Technical-Commercial Service

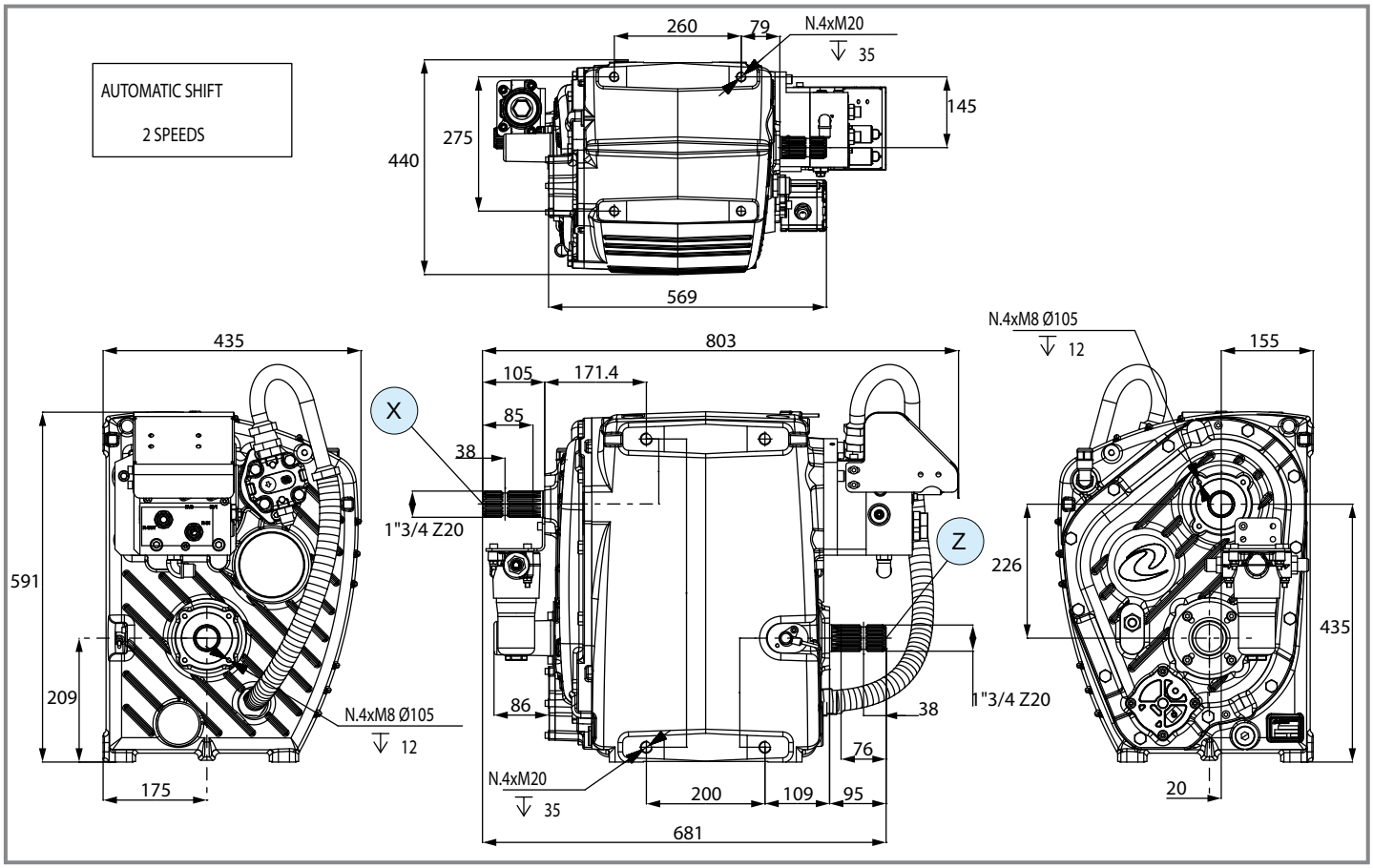

	i	N_1 [rpm]	P_1 [kW]	M_2 [Nm]	Shaft type X	Shaft type Y	Shaft type Z	Input	Features	Code	Mounting	
- R	**1.00** **1.80**	540	134.0	2370 4260	(6) 1"3/4 Z20	-	(6) 1"3/4 Z20	X	2 speed	9.614.002	-	std
- R	**1.00** **1.80**	1000	186.5	1780 3200								
- R	**1.00** **1.80** **3.20**	1000	186.5	1780 3200 5650	(6) 1"3/4 Z20	-	(6) 1"3/4 Z20	X	3 speed	9.614.602	-	std

PGA-502

Code **5714**

(4.06)

[kg] 180 | [l] 11

Per configurazioni non a catalogo contattare Servizio Tecnico-Commerciale
For non-catalog configurations contact Technical-Commercial Service

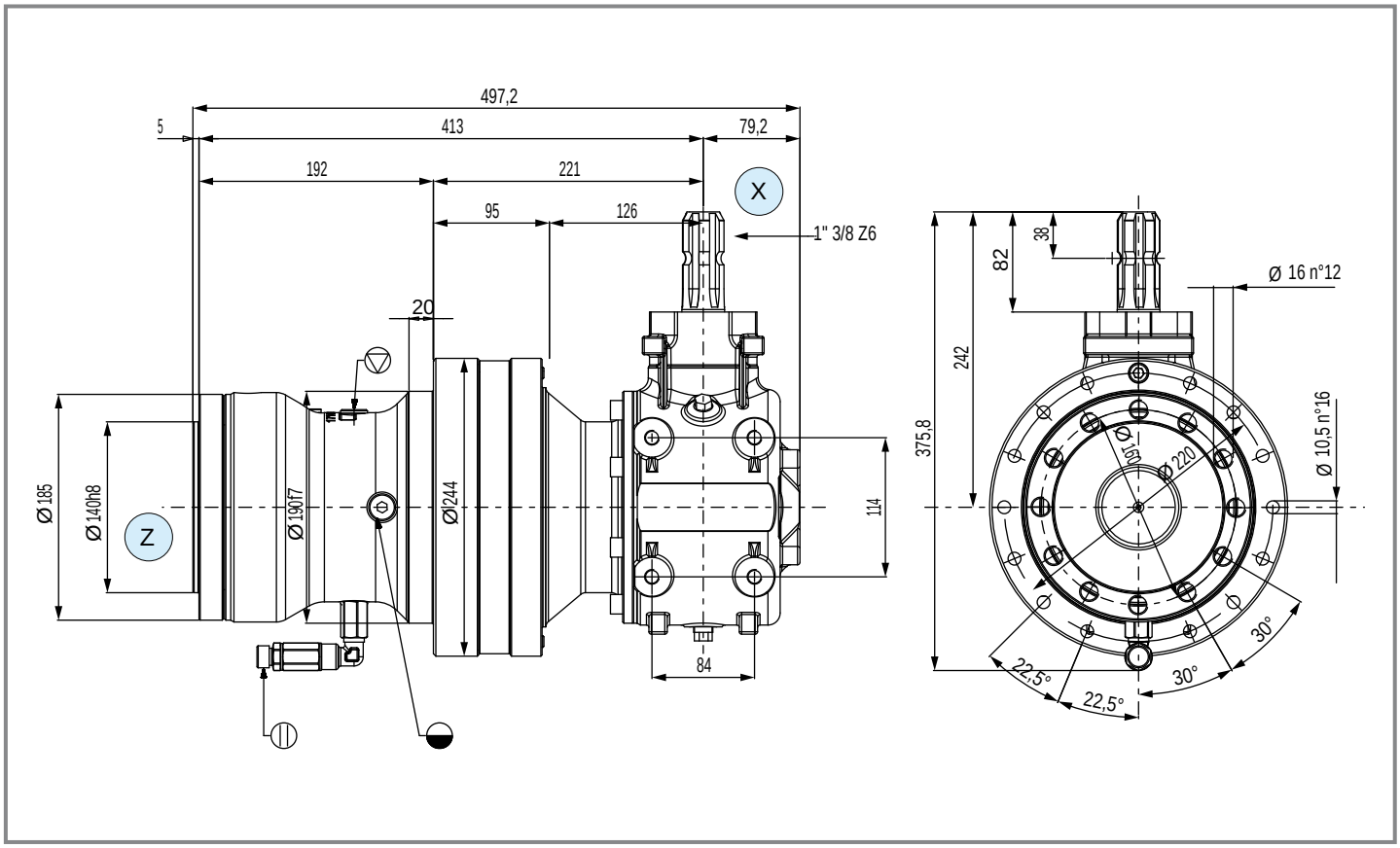

	i	N_1 [rpm]	M_2 [Nm]	Shaft type X	Shaft type Y	Shaft type Z	Input	Option	Code	Mounting	
R	**15.51**	540	3810	1 1" 3/8 Z6	-		X	-	5714.500.0502	V37	std

comer industries

Questa pagina è lasciata intenzionalmente bianca
This page is intentionally left blank

N-673J

Code **673.8**

(4.06)



[kg] 110 | [l] 1.8

Per configurazioni non a catalogo contattare Servizio Tecnico-Commerciale
For non-catalog configurations contact Technical-Commercial Service

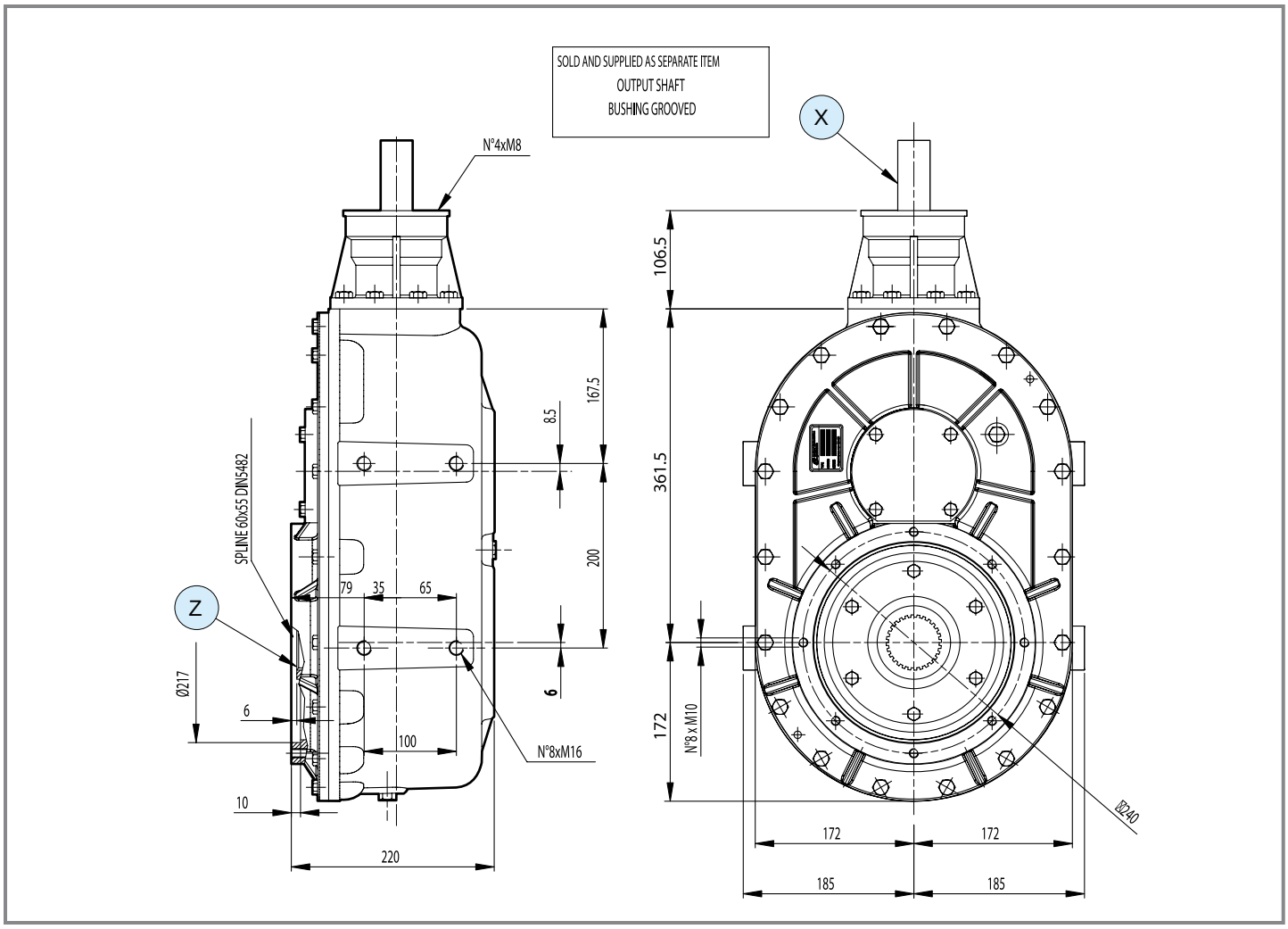

	i	N_1 [rpm]	P_1 [kW]	M_2 [Nm]	Shaft type X	Shaft type Y	Shaft type Z	Input	Option	Code	Mounting	
R	**10.80**	540	55.1	10206	1 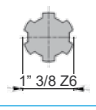 1" 3/8 Z6	-	spline 60x55 DIN 5482	X	-	9.673.801	99 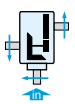	std
	15.00	540	33.0	8490	1 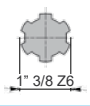 1" 3/8 Z6	-	spline 65x60 DIN 5482	X	-	9.673.802	99 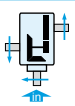	std

PGA-1202

Code **5717**

(4.06)



[kg] 180 | [l] 11

Per configurazioni non a catalogo contattare Servizio Tecnico-Commerciale
For non-catalog configurations contact Technical-Commercial Service

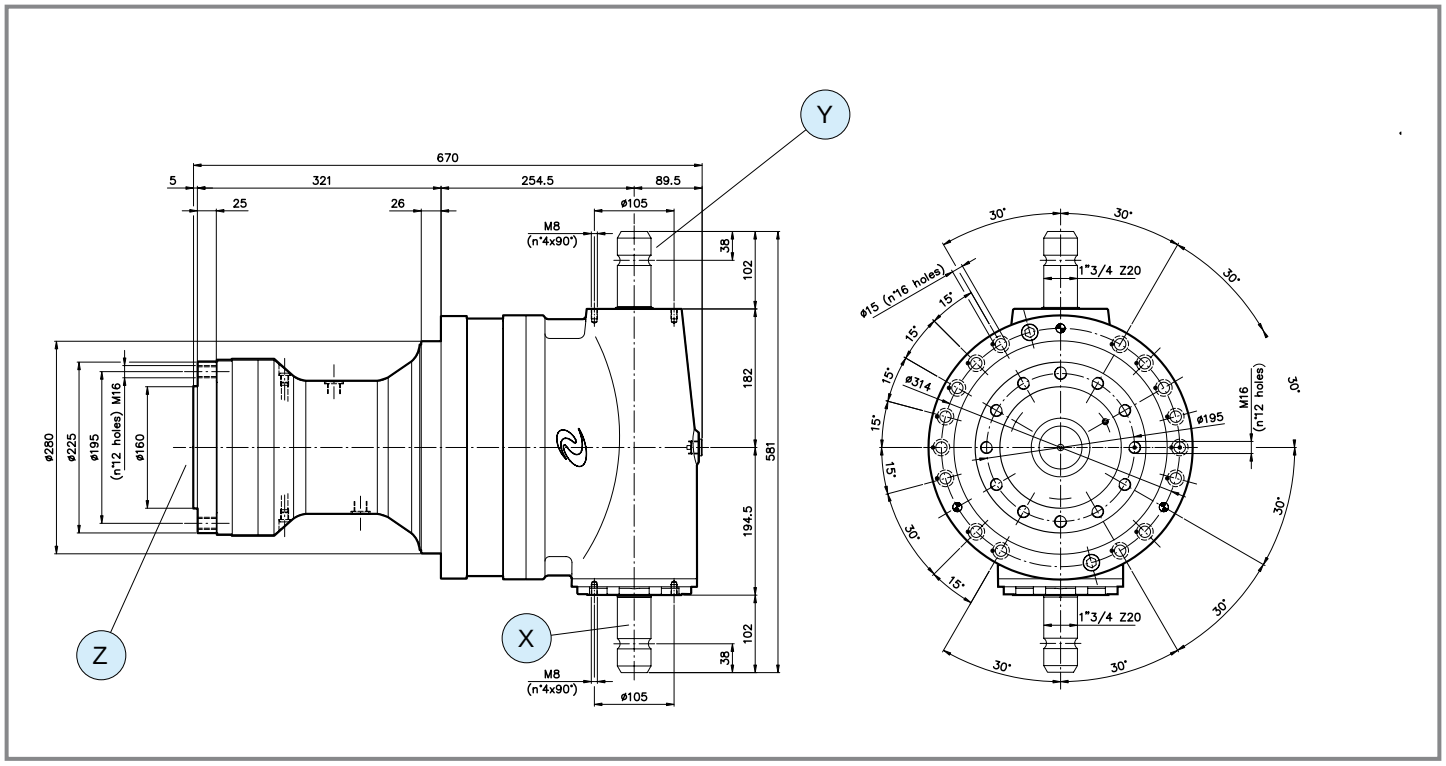

	i	N_1 [rpm]	M_2 [Nm]	Shaft type X	Shaft type Y	Shaft type Z	Input	Option	Code	Mounting	
R	**13.90**	540	12800	6 1"3/4 Z20	6 1"3/4 Z20		X	-	5717.000.8572.C	V37	std
R	**16.10**	540	11600	6 1"3/4 Z20	6 1"3/4 Z20		X	-	5717.000.8570.C	V37	std
	19.40	540	8600	6 1"3/4 Z20	6 1"3/4 Z20		X	-	5717.000.8571.C	V37	std

PGA-1602

Code **5717**

(4.06)



[kg] 280 | [l] 15.5

Per configurazioni non a catalogo contattare Servizio Tecnico-Commerciale
For non-catalog configurations contact Technical-Commercial Service

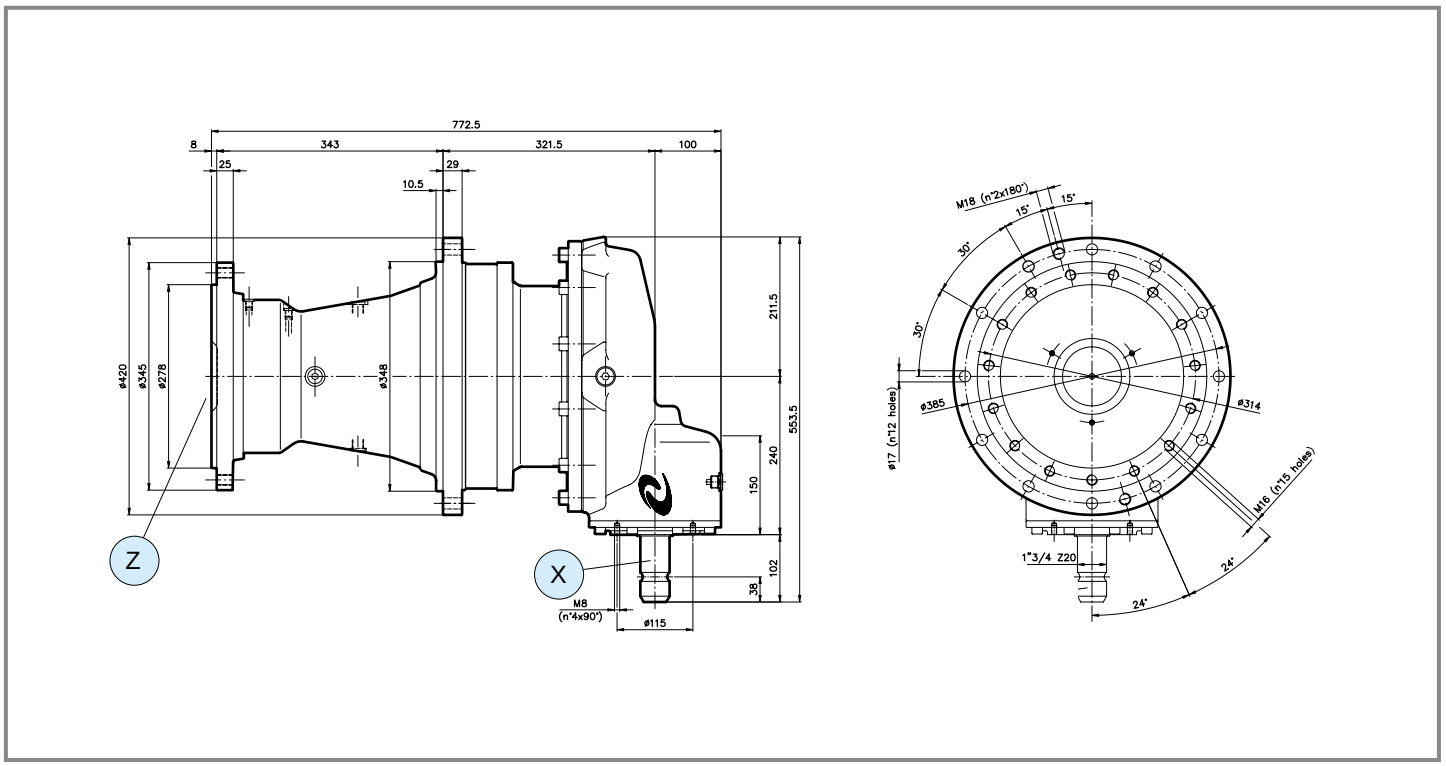

	i	N_1 [rpm]	M_2 [Nm]	Shaft type X	Shaft type Y	Shaft type Z	Input	Option	Code	Mounting	
R	**16.13**	540	15700	6 1"3/4 Z20	-		X	-	5717.004.8580.C	V37	std
	21.10	540	12010	6 1"3/4 Z20	-		X	-	5717.004.8581.C	V37	std

PGA-1602

Code **5717**

(4.06)



[kg] 265 | [l] 19.7

Per configurazioni non a catalogo contattare Servizio Tecnico-Commerciale
For non-catalog configurations contact Technical-Commercial Service

Versione doppio albero.
Double shaft version.

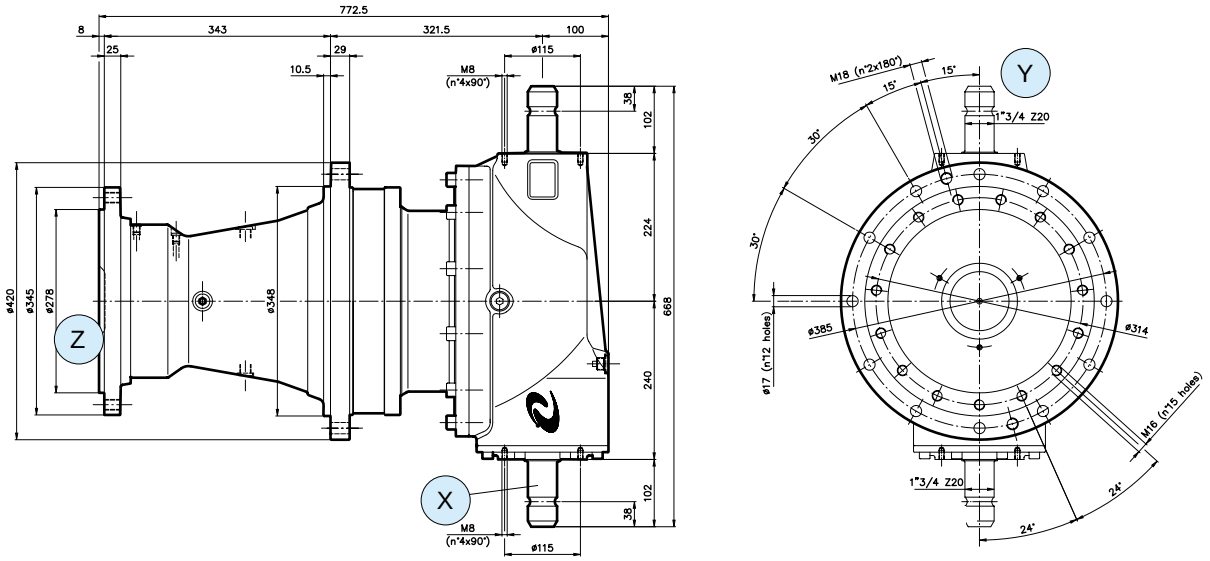

	i	N_1 [rpm]	M_2 [Nm]	Shaft type X	Shaft type Y	Shaft type Z	Input	Option	Features	Code	Mounting	
R	**13.40**	540	17000	6 1"3/4 Z20	6 1"3/4 Z20		X	-	4 Satelliti *4 Planetary gear*	5717.004.8555.C	V37	std
	13.40	540	16500	6 1"3/4 Z20	6 1"3/4 Z20		X	-	-	5717.004.8550.C	V37	std
	16.13	540	15700	6 1"3/4 Z20	6 1"3/4 Z20		X	-	-	5717.004.8541.C	V37	std
	18.20	540	13500	6 1"3/4 Z20	6 1"3/4 Z20		X	-	-	5717.004.8542.C	V37	std
	21.10	540	12010	6 1"3/4 Z20	6 1"3/4 Z20		X	-	-	5717.004.8543.C	V37	std

PGA-1603

Code **5717**

(4.06)



[kg] 270 | [l] 19.7

Per configurazioni non a catalogo contattare Servizio Tecnico-Commerciale
For non-catalog configurations contact Technical-Commercial Service

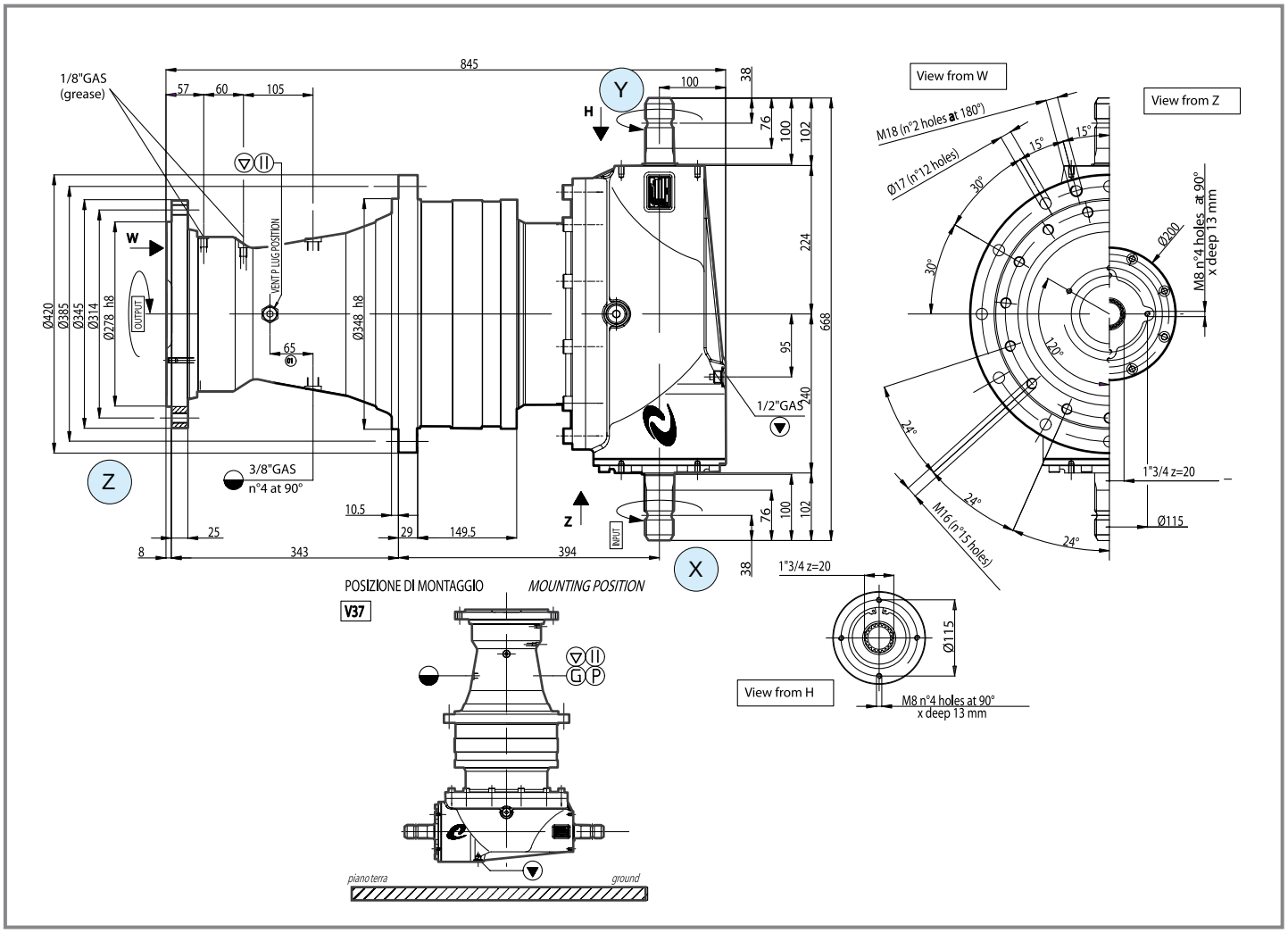

	i	N_1 [rpm]	M_2 [Nm]	Shaft type X	Shaft type Y	Shaft type Z	Input	Option	Code	Mounting	
R	**25.89**	540	20000	6  1"3/4 Z20	6  1"3/4 Z20		X	4 Satelliti *4 Planetary gear*	5717.004.8554.C	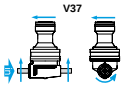 V37	std

PGA-1603

Code **5717**

(4.06)

[kg] 303 | [l] -

Per configurazioni non a catalogo contattare Servizio Tecnico-Commerciale
For non-catalog configurations contact Technical-Commercial Service

Versione per attacco motore idraulico in entrata.
Version for input hydraulic motor

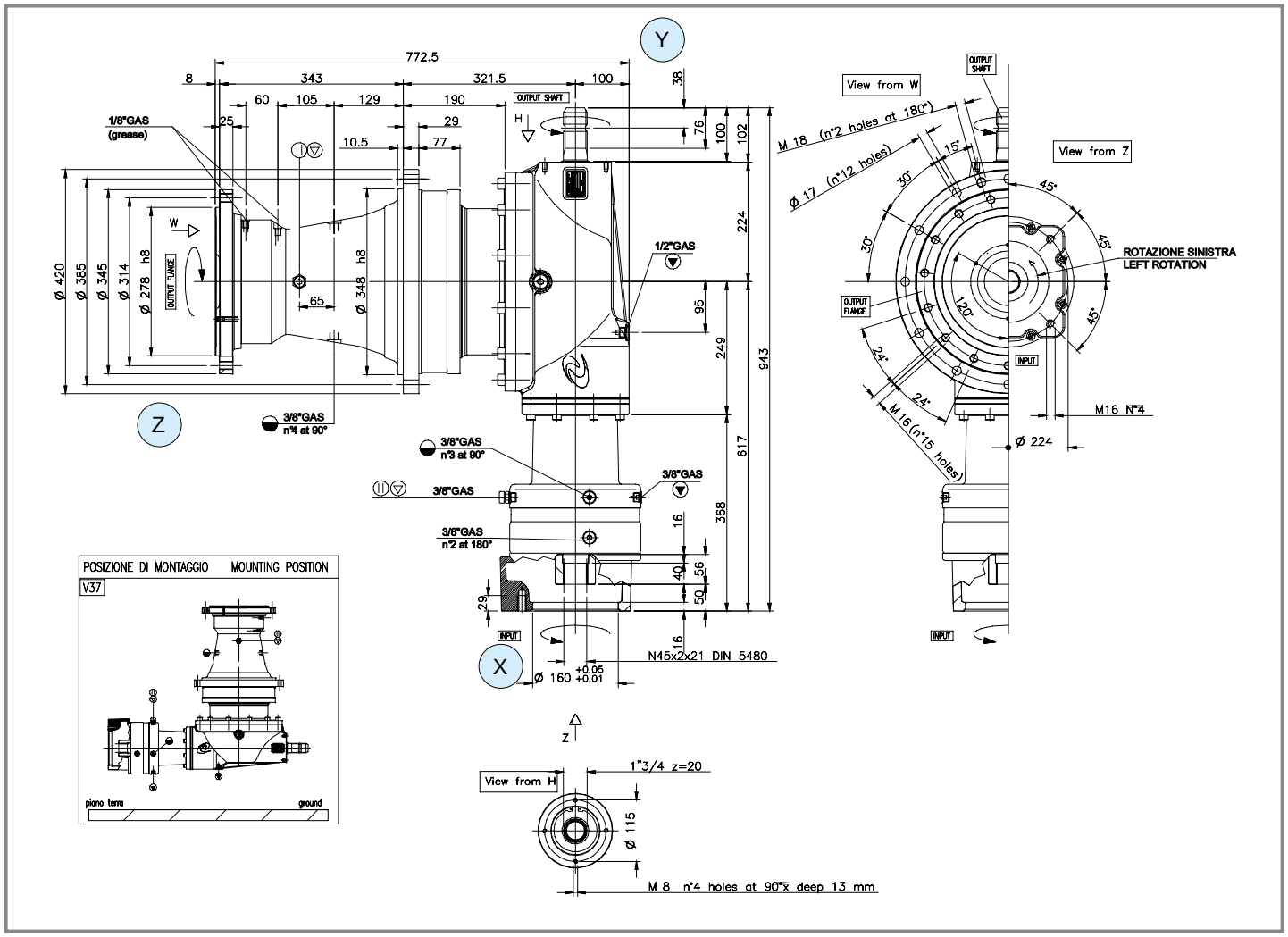

	i	N_1 [rpm]	M_2 [Nm]	Shaft type X	Shaft type Y	Shaft type Z	Input	Input flange	Code	Mounting	
R	**50.00**	3000	18020	72 16/32" DP Z27	6 1"3/4 Z20		X	SAE D 16/32 Z27	5717.000.0624	V37	std
R	**66.40**	3000	14750	73 45x2x21 DIN5480	6 1"3/4 Z20		X	Sauer H1B	5717.000.0602	V37	std
R	**66.40**	3000	14750	75 16/32" DP Z23	6 1"3/4 Z20		X	SAE C 16/32 Z23	5717.000.0610	V37	std
R	**83.26**	3000	14750	74 16/32" DP Z21	6 1"3/4 Z20		X	SAE C 16/32 Z21	5717.000.0619	V37	std

PGA-2102
Code **5718**

PGA-2103
Code **5718**

(4.06)



kg [kg]	270
OIL [l]	19.7
kg [kg]	265
OIL [l]	19.7

Per configurazioni non a catalogo contattare Servizio Tecnico-Commerciale
For non-catalog configurations contact Technical-Commercial Service

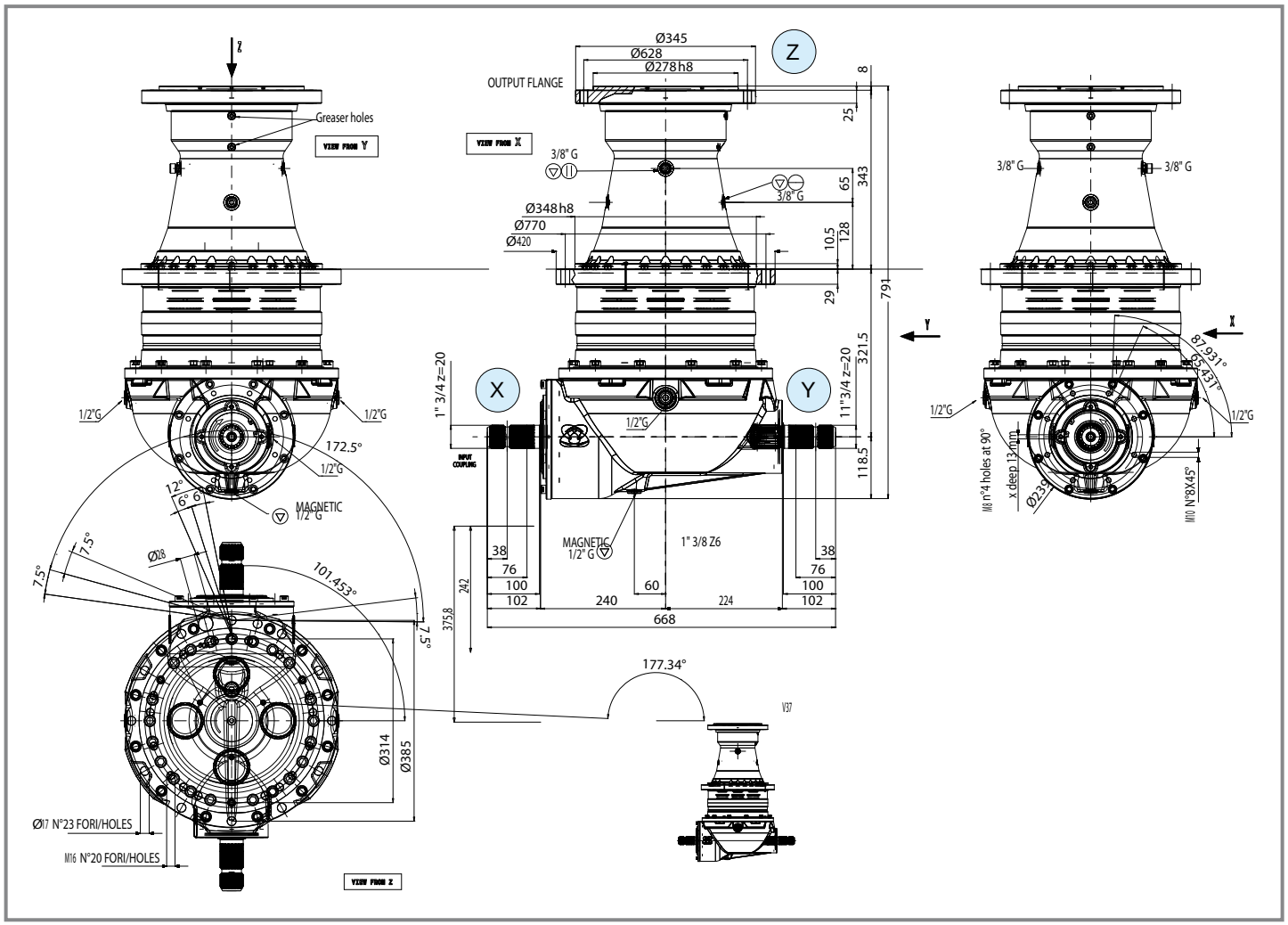

	i	N_1 [rpm]	M_2 [Nm]	Shaft type X	Shaft type Y	Shaft type Z	Input	Features	Code	Mounting	
R	**13.56**	540	21000	6 1"3/4 Z20	6 1"3/4 Z20		X	2 Stadi 2 Stages	5817.004.8003	V37	std
R	**16.00**	540	21000	6 1"3/4 Z20	6 1"3/4 Z20		X	2 Stadi 2 Stages	5817.004.8004	V37	std
R	**21.10**	540	21000	6 1"3/4 Z20	6 1"3/4 Z20		X	3 Stadi 3 Stages	5817.004.8007	V37	std
R	**23.30**	540	21000	6 1"3/4 Z20	6 1"3/4 Z20		X	3 Stadi 3 Stages	5817.004.8009	V37	std

comer industries

PGA-2502

Code **5718**

(4.06)



[kg] 420 | [l] -

Per configurazioni non a catalogo contattare Servizio Tecnico-Commerciale
For non-catalog configurations contact Technical-Commercial Service

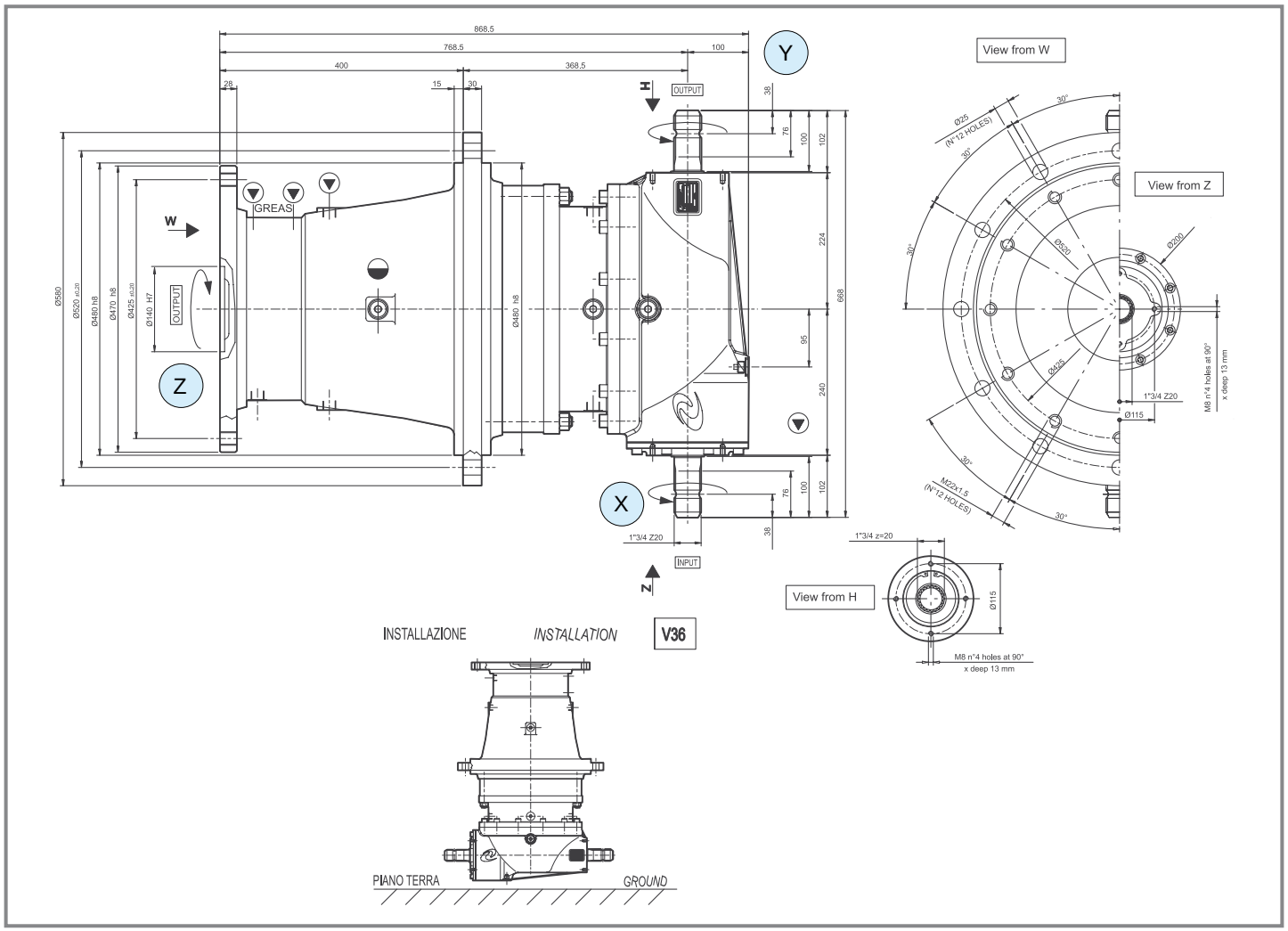

	i	N_1 [rpm]	M_2 [Nm]	Shaft type X	Shaft type Y	Shaft type Z	Input	Features	Code	Mounting	
R	**13.60**	540	23780	6 1"3/4 Z20	6 1"3/4 Z20		X	-	5718.000.0539	V37	std
	15.20	540	22000	6 1"3/4 Z20	6 1"3/4 Z20		X	-	5718.000.0533	V37	std
	19.60	540	21000	6 1"3/4 Z20	6 1"3/4 Z20		X	-	5718.000.0530	V37	std

PGA-2503

Code **5718**

(4.06)

[kg] [l]

Per configurazioni non a catalogo contattare Servizio Tecnico-Commerciale
For non-catalog configurations contact Technical-Commercial Service

Versione per attacco motore idraulico in entrata.
Version for input hydraulic motor

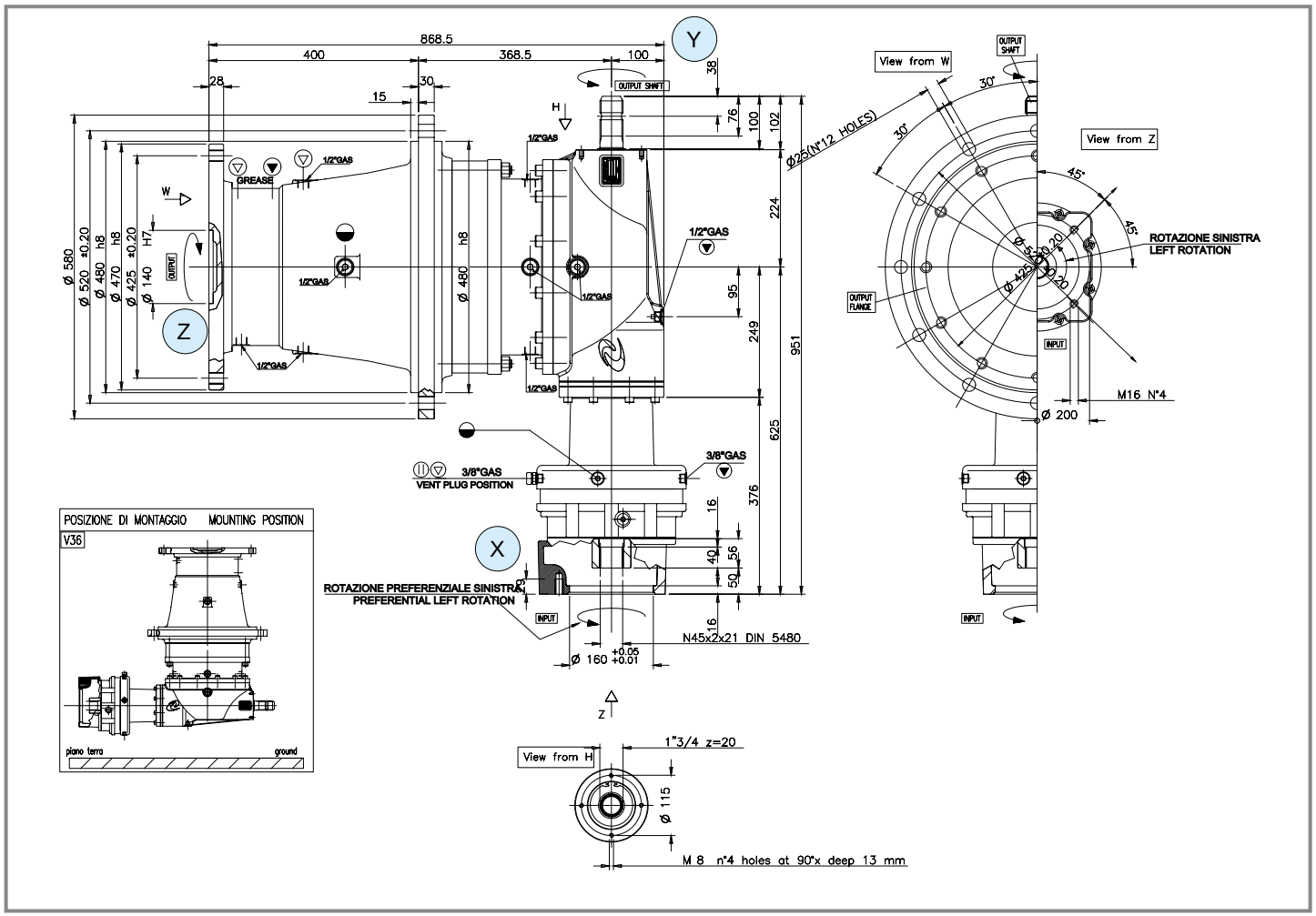

	i	N_1 [rpm]	M_2 [Nm]	Shaft type X	Shaft type Y	Shaft type Z	Input flange	Features	Code	Mounting	
R	**72.00**	540	23780	73 45x2x21 DIN5480	6 1"3/4 Z20		X	SAE C / REXROTH A2FM160	5718.000.0531	V37	std
R	**86.65**	3000	20000	73 45x2x21 DIN5480	6 1"3/4 Z20		X	SAE C / Sauer H1B	5718.000.0532	V37	std
	86.65	3000	20000	72 16/32" DP Z27	6 1"3/4 Z20		X	SAE D	5718.000.0535	V37	std

comer industries

PGA-3003

Code **5718**

(4.06)

[kg] - | [l] -

Per configurazioni non a catalogo contattare Servizio Tecnico-Commerciale
For non-catalog configurations contact Technical-Commercial Service

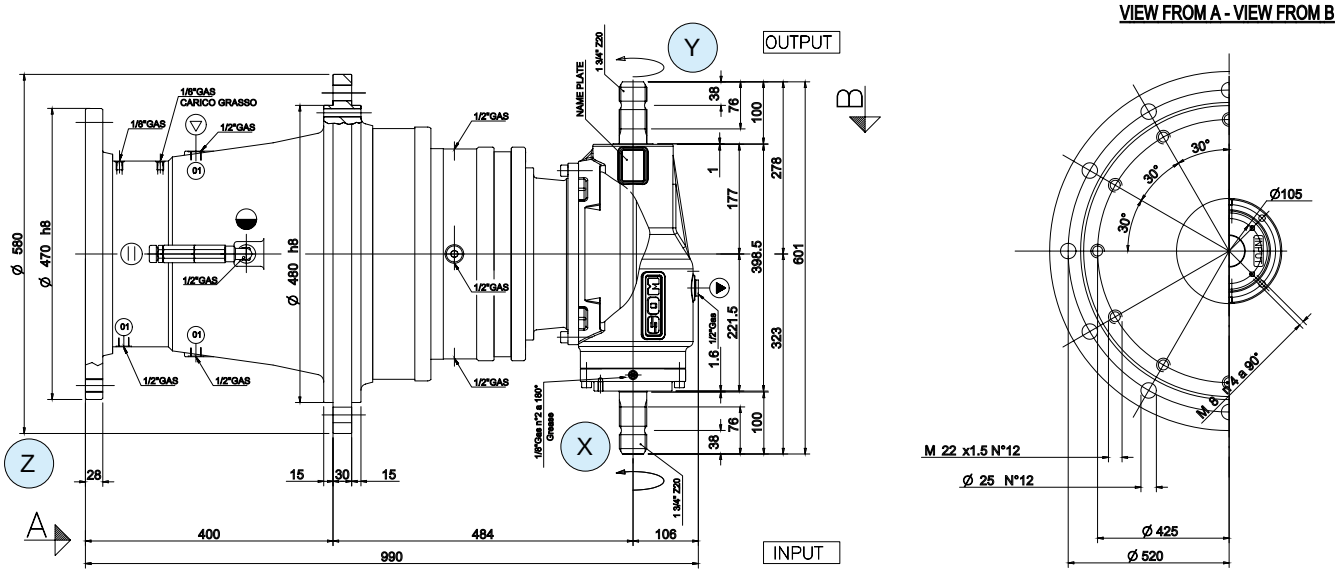

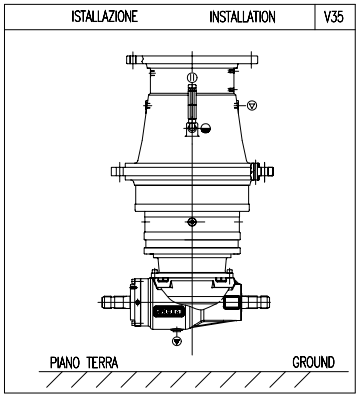

	i	N_1 [rpm]	M_2 [Nm]	Shaft type X	Shaft type Y	Shaft type Z	Input	Features	Code	Mounting	
R	**29.34**	540	30760	6 1"3/4 Z20	6 1"3/4 Z20		X	-	5718.800.0564	V37	std
	35.40	540	30760	6 1"3/4 Z20	6 1"3/4 Z20		X	-	5718.800.0563	V37	std

PGA-4203

Code **5724**

(4.06)

[kg] 587 | [I] -

Per configurazioni non a catalogo contattare Servizio Tecnico-Commerciale
For non-catalog configurations contact Technical-Commercial Service

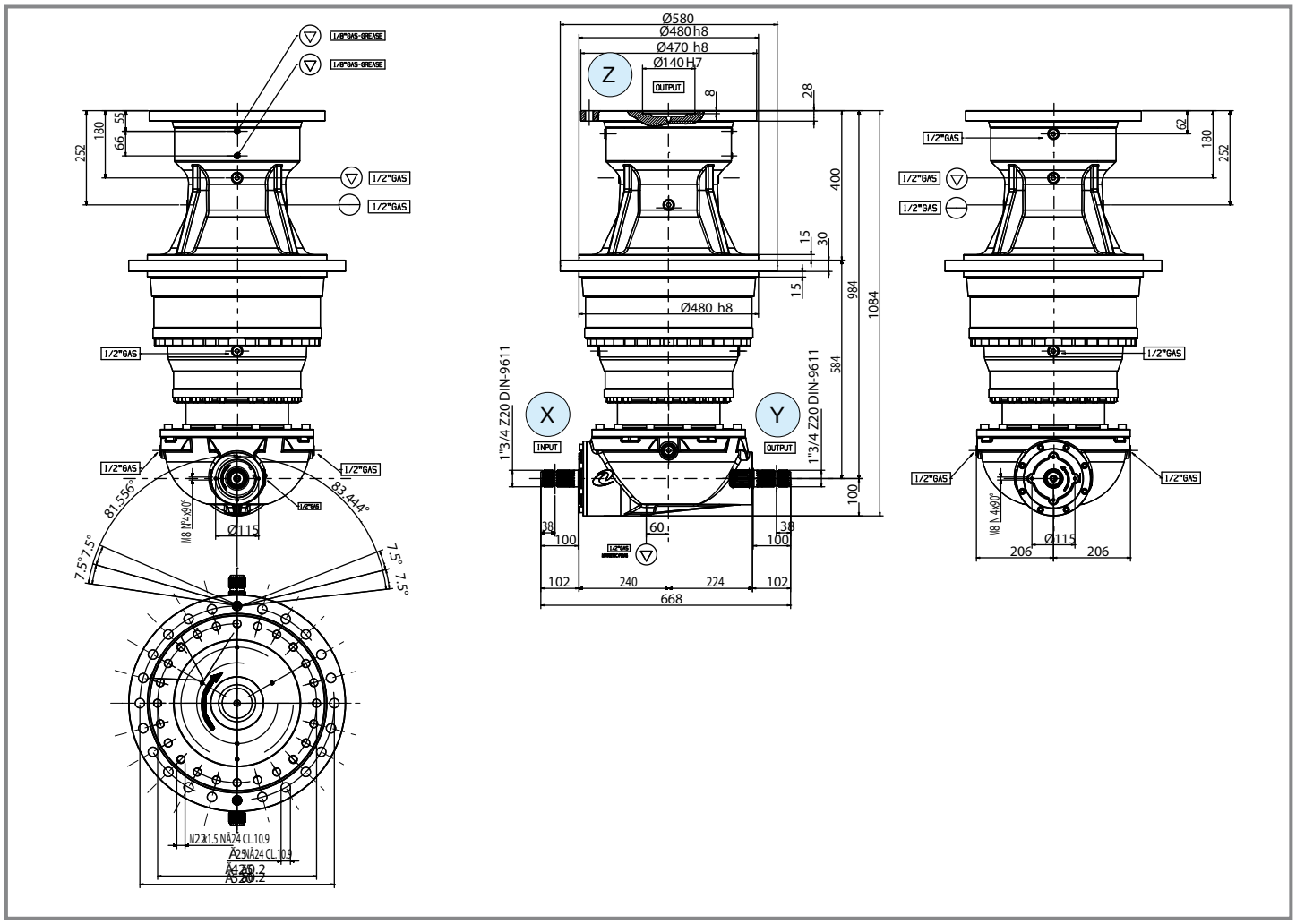

	i	N_1 [rpm]	M_2 [Nm]	Shaft type X	Shaft type Y	Shaft type Z	Input	Features	Code	Mounting	
R	**31.60**	1000	142000	6 1"3/4 Z20	6 1"3/4 Z20		X	-	5724.004.0001	V37	std

comer industries

D-732A

Code **732**

(4.09)

[kg] 62 | [l] 5.6

Per configurazioni non a catalogo contattare Servizio Tecnico-Commerciale
For non-catalog configurations contact Technical-Commercial Service

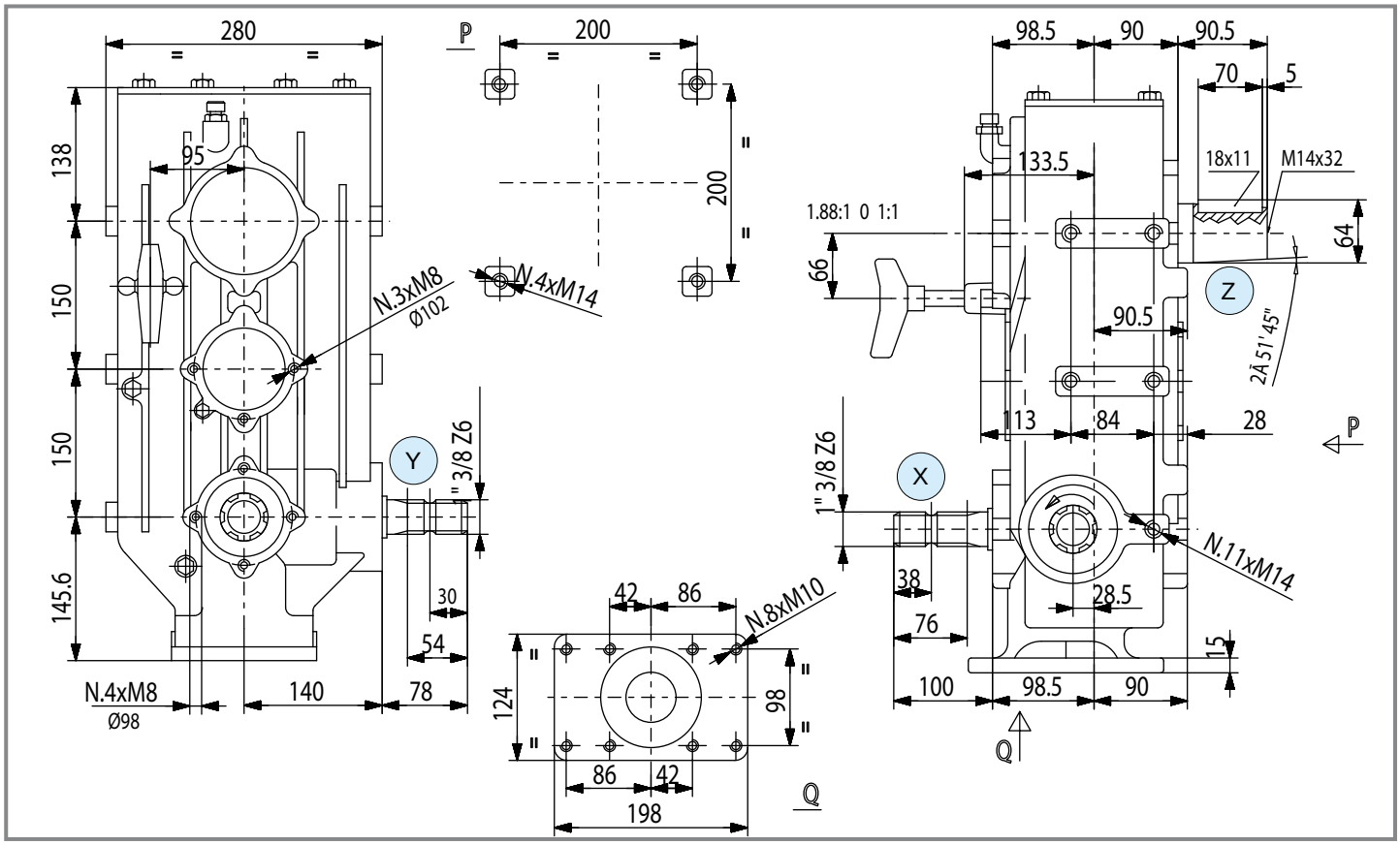

	i	N_1 [rpm]	M_2 [Nm]	Shaft type X	Shaft type Y	Shaft type Z	Input	Output	Option	Features	Code	Mounting	
				1 - Ruota libera / *Free wheel*									
R	**1.00 1.93**	540	59.0	1 — 1" 3/8 Z6	-	70 — L 90.5, ø 57	X	-	-	-	9.732.001	-	std
R	**1.00 1.93**	540	59.0	1 — 1" 3/8 Z6	1 — 1" 3/8 Z6	-	X	-	1	-	9.732.316	-	std
R	**1.00 1.93**	540	59.0	1 — 1" 3/8 Z6	1 — 1" 3/8 Z6	71 — 64	X	A.P. GR3	-	-	9.732.377	-	std
R	**1.00 1.93**	540	91.9	1 — 1" 3/8 Z6	1 — 1" 3/8 Z6	71 — 64	X	A.P. GR3	-	-	9.732.341	-	std
R	**1.00 1.88**	540	91.9	1 — 1" 3/8 Z6	1 — 1" 3/8 Z6	71 — 64	X	A.P. GR3	-	-	9.732.338	-	std

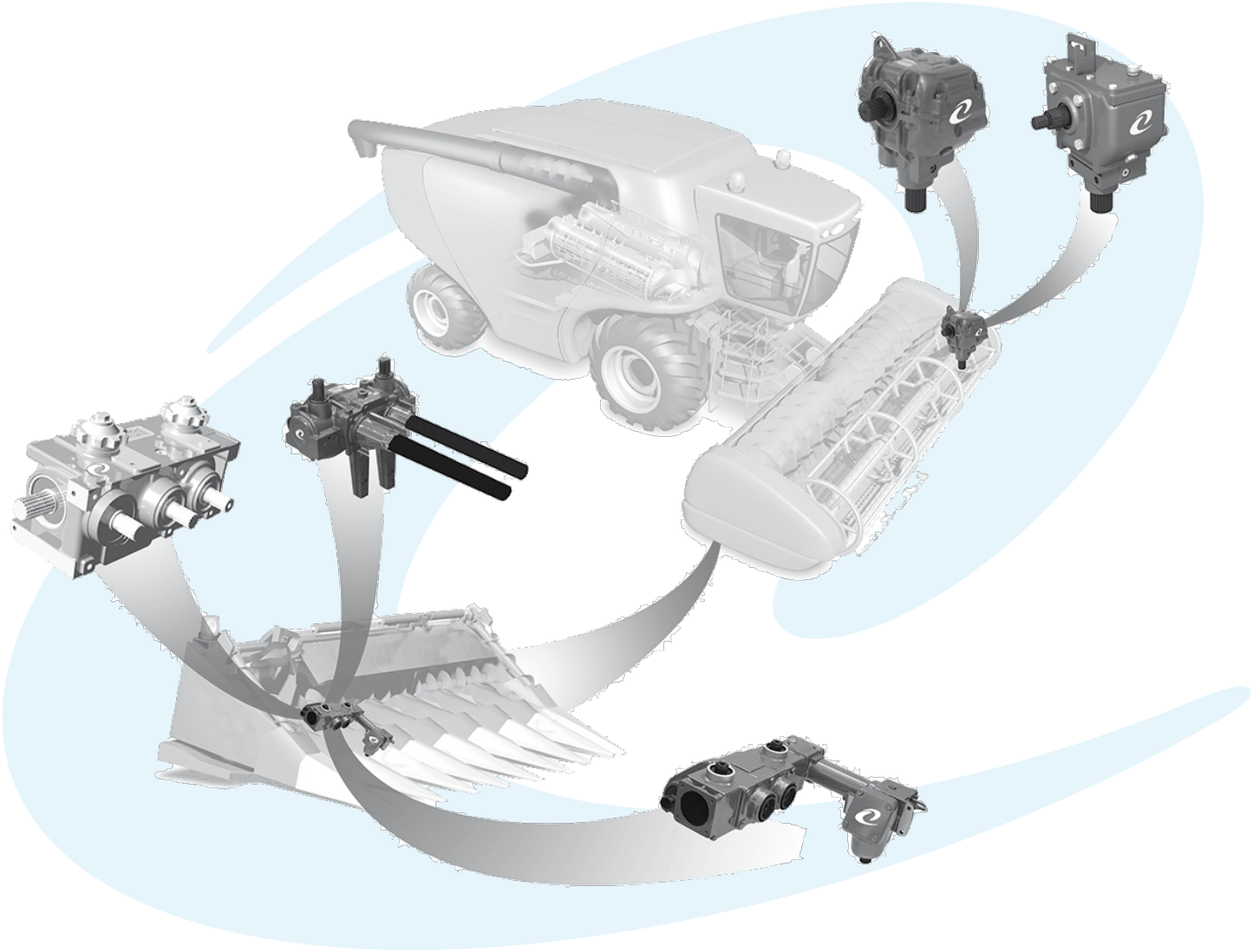

Per configurazioni non a catalogo contattare Servizio Tecnico-Commerciale
For non-catalog configurations contact Technical-Commercial Service

	i	$P_{1\text{ - max}}$ [kW]	$M_{2\text{ - max}}$ [Nm]	Tipologia alberi disponibili *Available type of shafts*	p.
L-170B	M - - R -	11.0	-	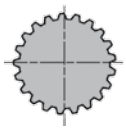	234
N-669J	M 0.51/1.21 - - R -	11.7	-		235
T-304A	M 1.50 - - R 1.41÷1.93	36.7	604	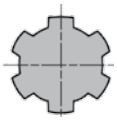	236
M-767A	M 1.60 - - R -	44.1	473	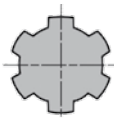	237

L-170B

Code **170**

(4.08)

[kg] 50 | [l] -

Per configurazioni non a catalogo contattare Servizio Tecnico-Commerciale
For non-catalog configurations contact Technical-Commercial Service

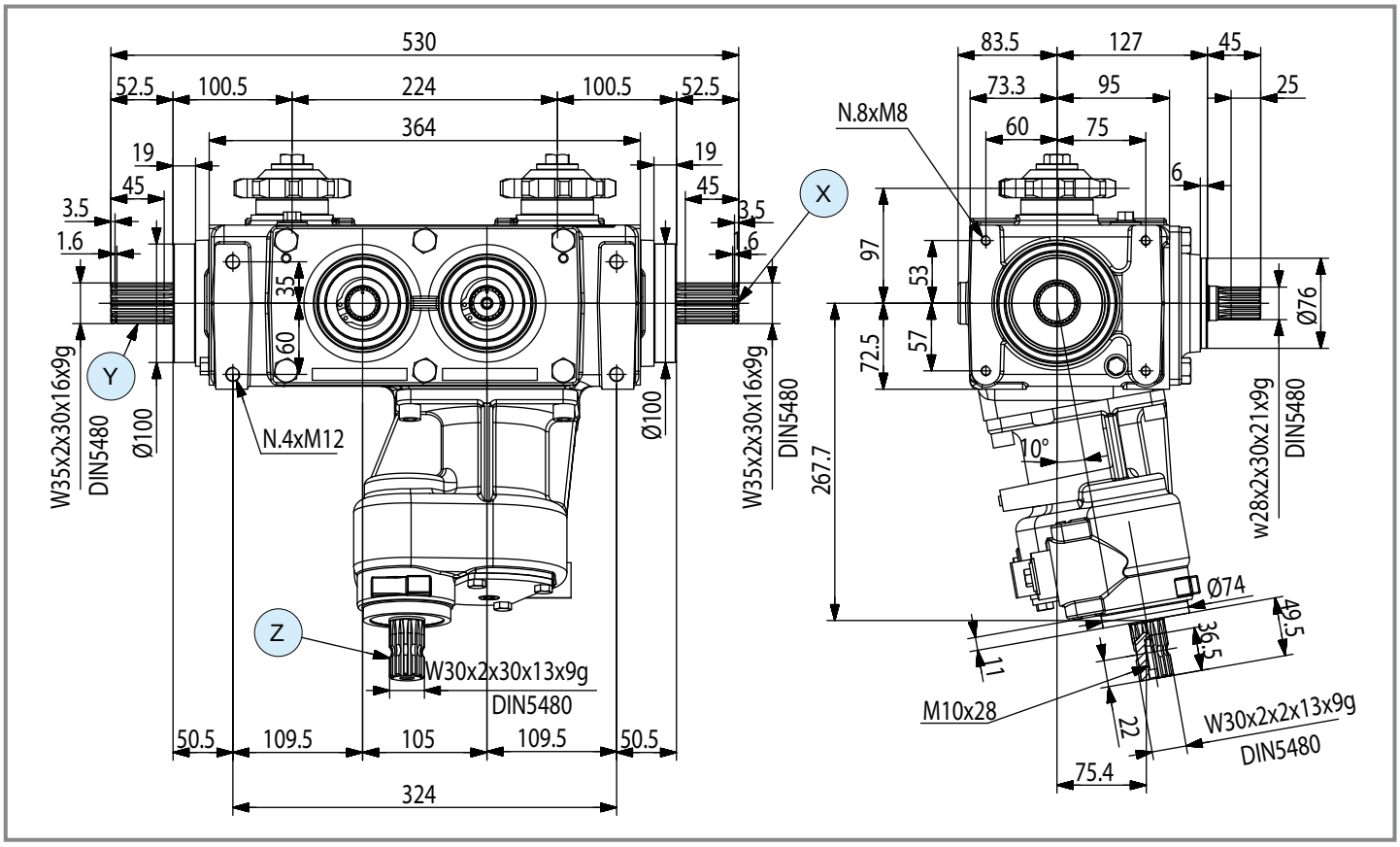

	i	N_1 [rpm]	P_1 [kW]	M_2 [Nm]	Shaft type X	Shaft type Y	Shaft type Z	Input	Features	Code	Mounting
M	-	580	11.0	-	70 35x31 DIN5482	71 28x25 DIN5482	72 30x27 DIN5482	X	-	-	21 22 special
M	-	580	11.0	-	70 35x31 DIN5482	71 28x25 DIN5482	72 30x27 DIN5482	X	SX	-	21 22 special
M	-	580	11.0	-	70 35x31 DIN5482	71 28x25 DIN5482	72 30x27 DIN5482	X	DX	-	21 22 special

N-669J

Code **669.8**

(4.08)

[kg] 34.5 | [l] -

Per configurazioni non a catalogo contattare Servizio Tecnico-Commerciale
For non-catalog configurations contact Technical-Commercial Service

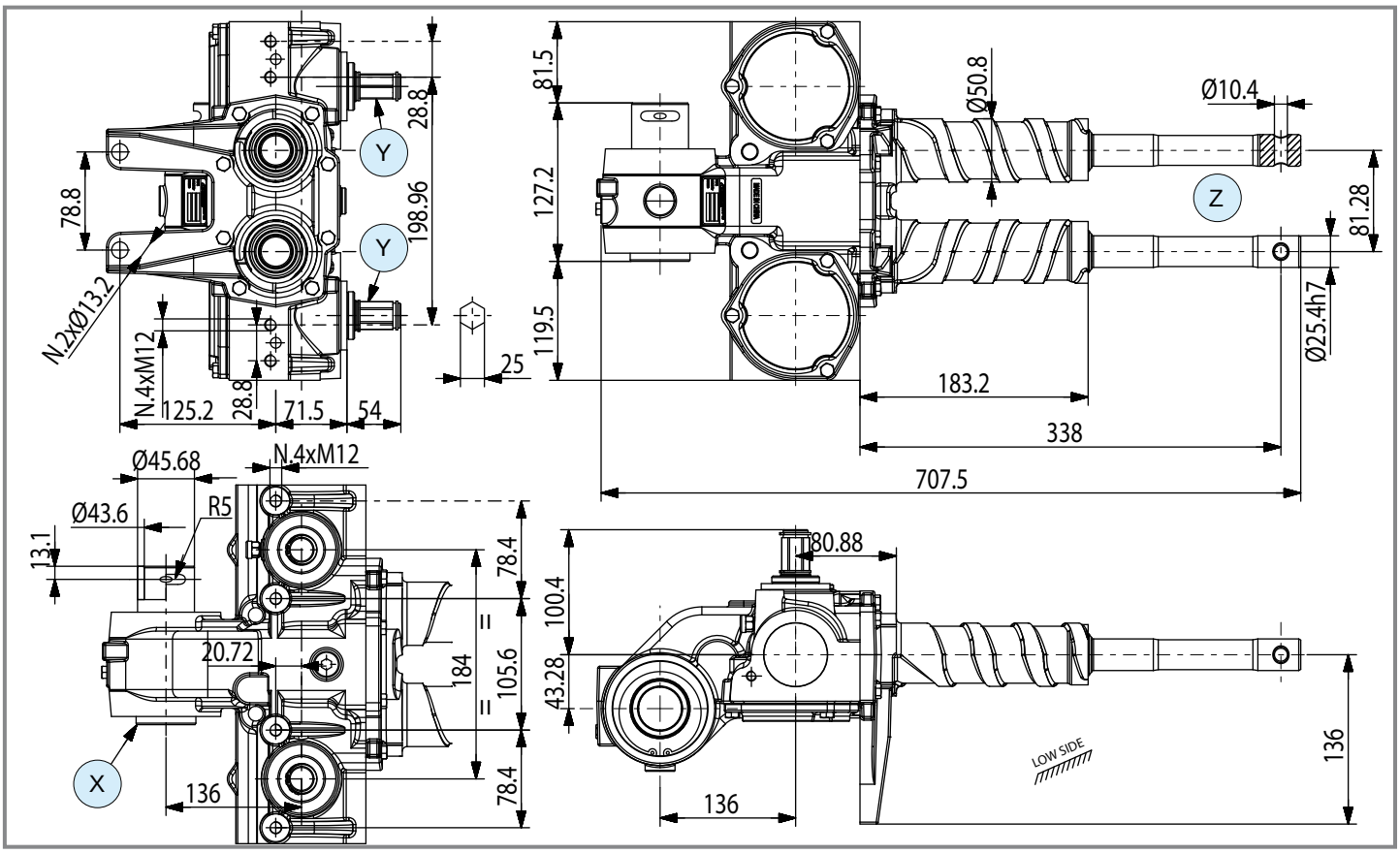

	i	N_1 [rpm]	P_1 [kW]	M_2 [Nm]	Shaft type X	Shaft type Y	Shaft type Z	Input	Features	Code	Mounting	
M	-	580	11.0	-	-	-	-	-	Ghisa *Cast Iron Housing*	9.669.808	-	std
	-	580	11.0	-	-	-	-	-	Alluminio *Aluminium Housing*	9.669.811	-	std

T-304A

Code **304**

(4.08)

[kg] 19 | [l] -

Per configurazioni non a catalogo contattare Servizio Tecnico-Commerciale
For non-catalog configurations contact Technical-Commercial Service

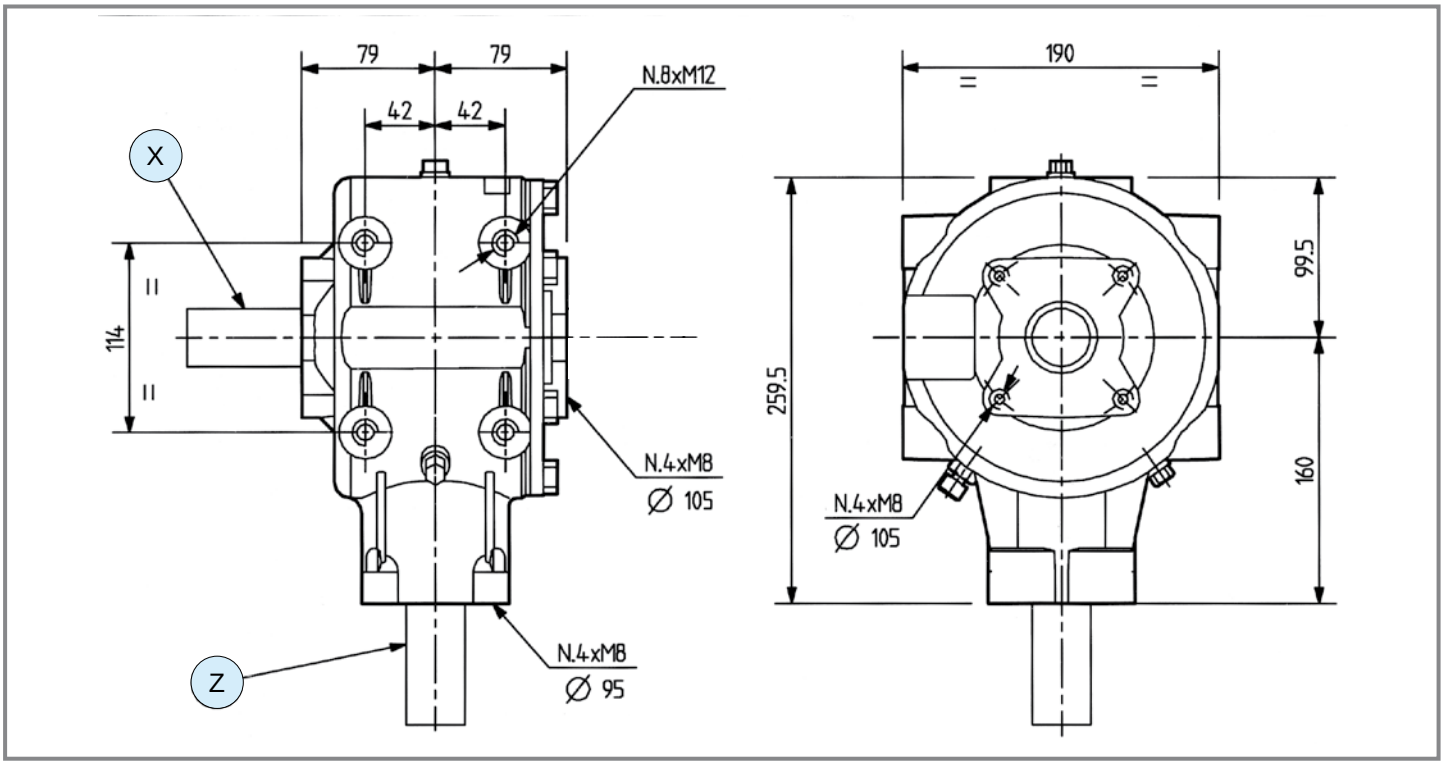

	i	N_1 [rpm]	P_1 [kW]	M_2 [Nm]	Shaft type X	Shaft type Y	Shaft type Z	Input	Features	Code	Mounting	
M	**1.50**	750	36.7	302	1 — 1" 3/8 Z6	-	1 — 1" 3/8 Z6	X	-	9.304.519	21 22	std
R	**1.41**	830	36.7	577	64 — 35x31 DIN5482	-	1 — 1" 3/8 Z6	Z	-	9.304.524	3 4	std
	1.50	900	36.7	567	64 — 35x31 DIN5482	-	1 — 1" 3/8 Z6	Z	-	9.304.514	3 4	std
	1.60	900	36.7	604	64 — 35x31 DIN5482	-	1 — 1" 3/8 Z6	Z	-	9.304.515	3 4	std
	1.93	1100	36.7	596	64 — 35x31 DIN5482	-	1 — 1" 3/8 Z6	Z	-	9.304.517	3 4	std

M-767A

Code **767**

(4.08)

[kg] 35.7 | [l] -

Per configurazioni non a catalogo contattare Servizio Tecnico-Commerciale
For non-catalog configurations contact Technical-Commercial Service

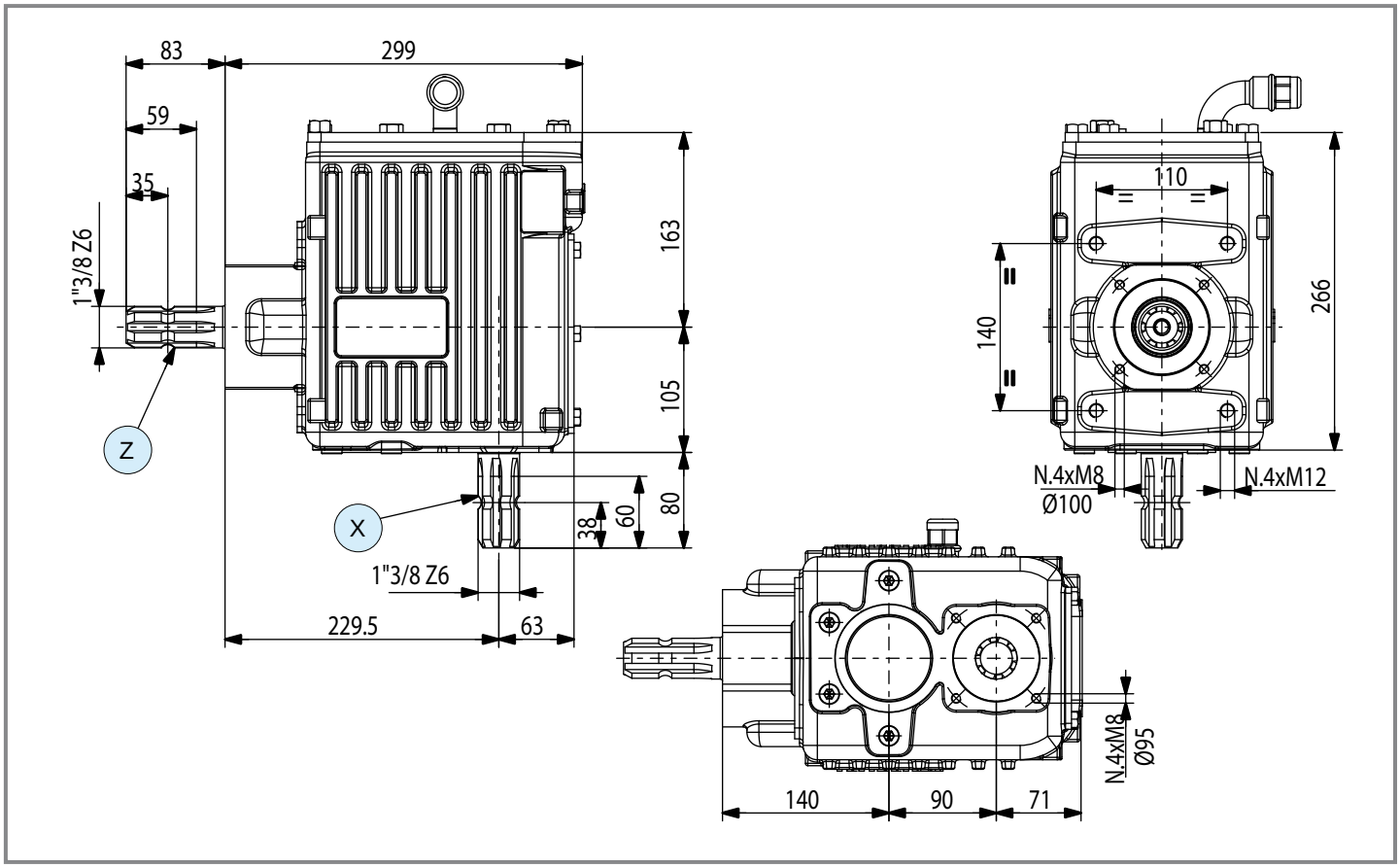

	i	N_1 [rpm]	P_1 [kW]	M_2 [Nm]	Shaft type X	Shaft type Y	Shaft type Z	Input	Features	Code	Mounting	
M ⇨ +	**1.60**	540	44.1	473	[1] 1" 3/8 Z6	-	[1] 1" 3/8 Z6	Z	-	9.767.000	-	std

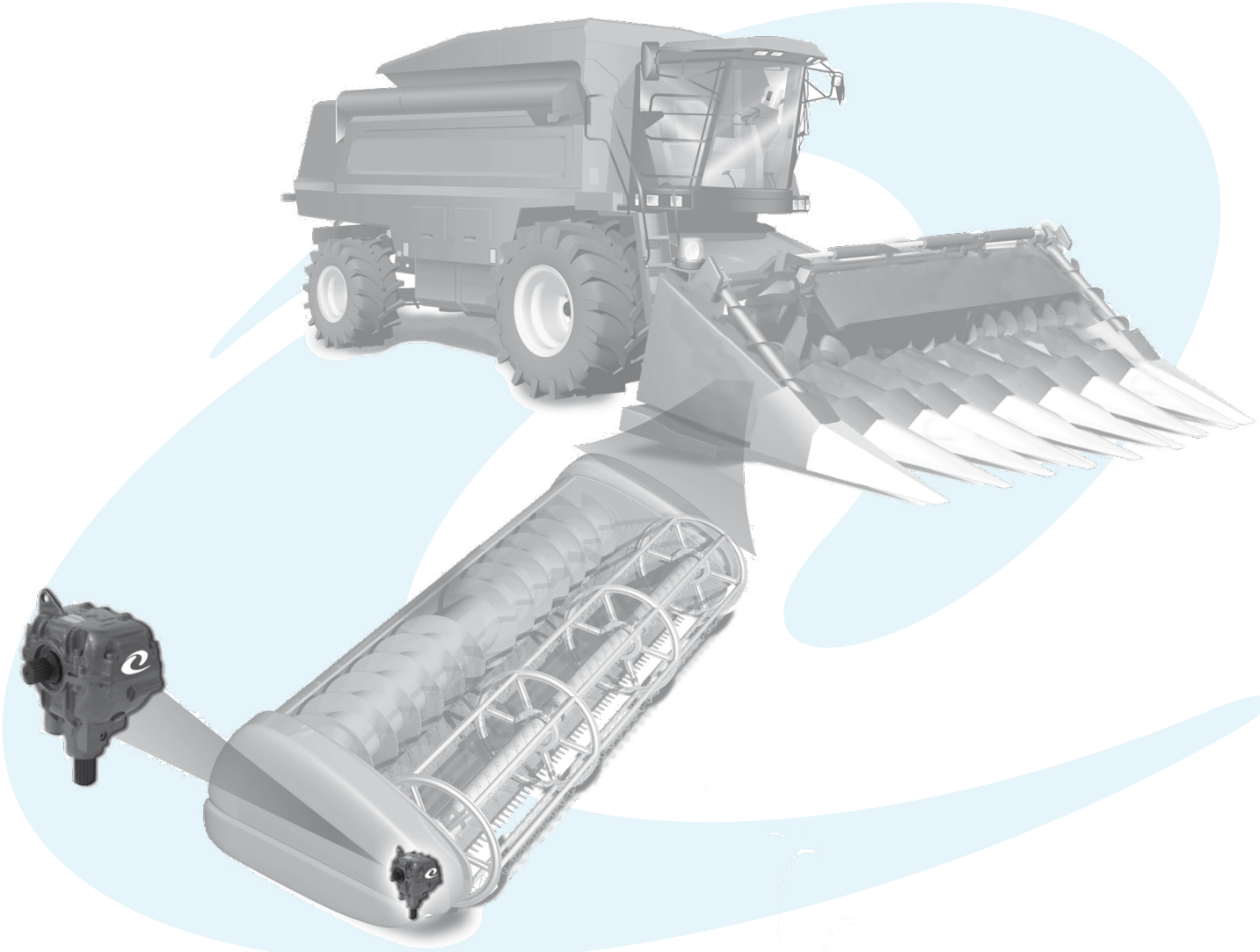

	i	$M_{2\text{ - max}}$ [Nm]	Tipologia alberi disponibili *Available type of shafts*	p.
OS-784	-	-	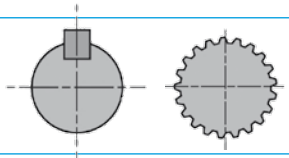	240
OS-861	-	-	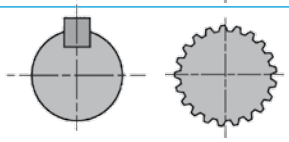	241
LF-153A	M 2.80	75		242

OS-784

Code **784**

(4.10)

[kg] 21 | [l] -

Per configurazioni non a catalogo contattare Servizio Tecnico-Commerciale
For non-catalog configurations contact Technical-Commercial Service

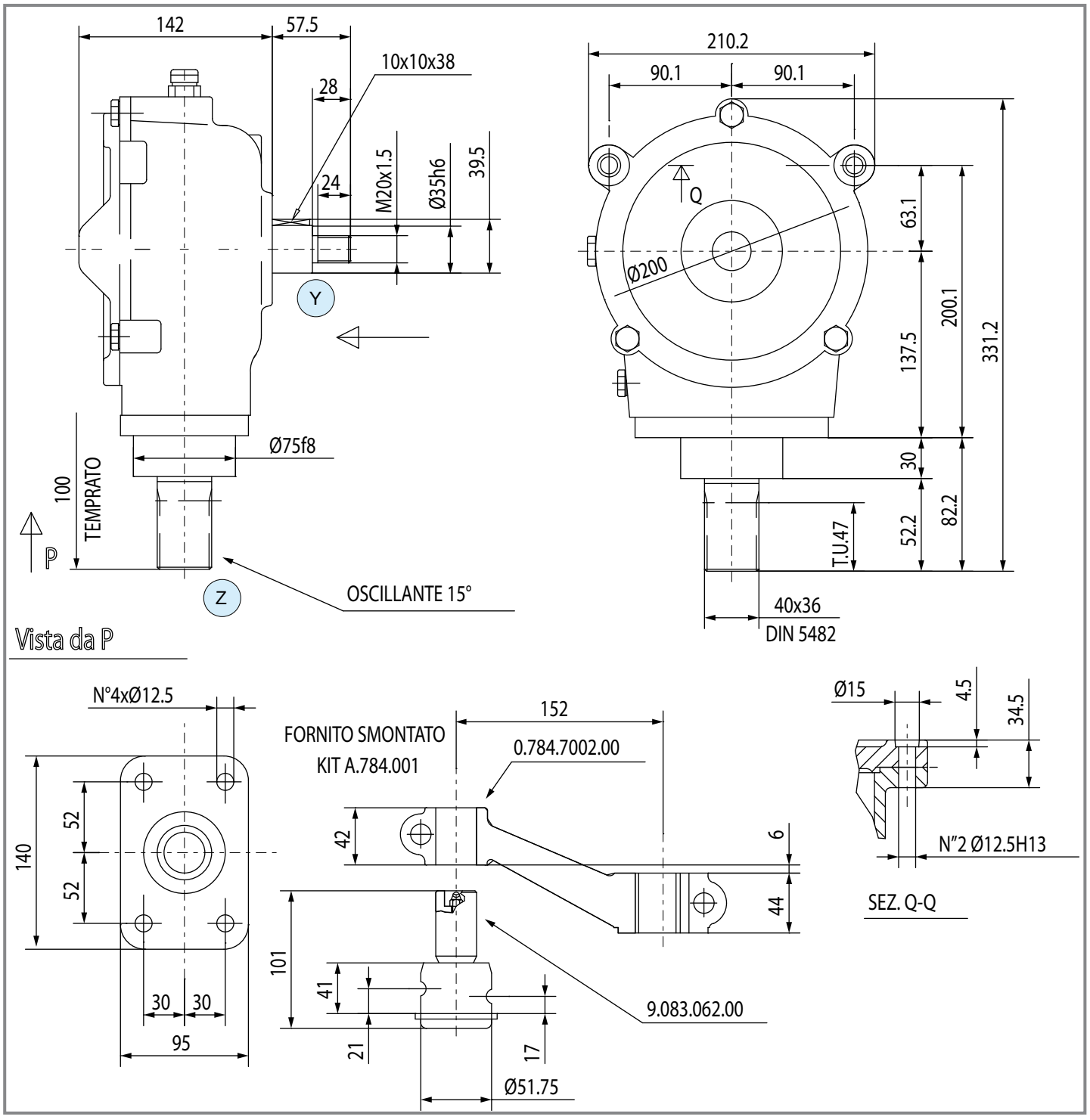

	i	N_1 [rpm]	P_1 [kW]	M_2 [Nm]	Shaft type X	Shaft type Y	Shaft type Z	Input	Features	Code	Mounting	
	-	550÷600	-	-	-	3 L 29.5 ø 35	56 40x36 DIN5482	Y	-	9.784.000	-	std

OS-861

Code **861**

(4.10)

[kg] 26 | [l] -

Per configurazioni non a catalogo contattare Servizio Tecnico-Commerciale
For non-catalog configurations contact Technical-Commercial Service

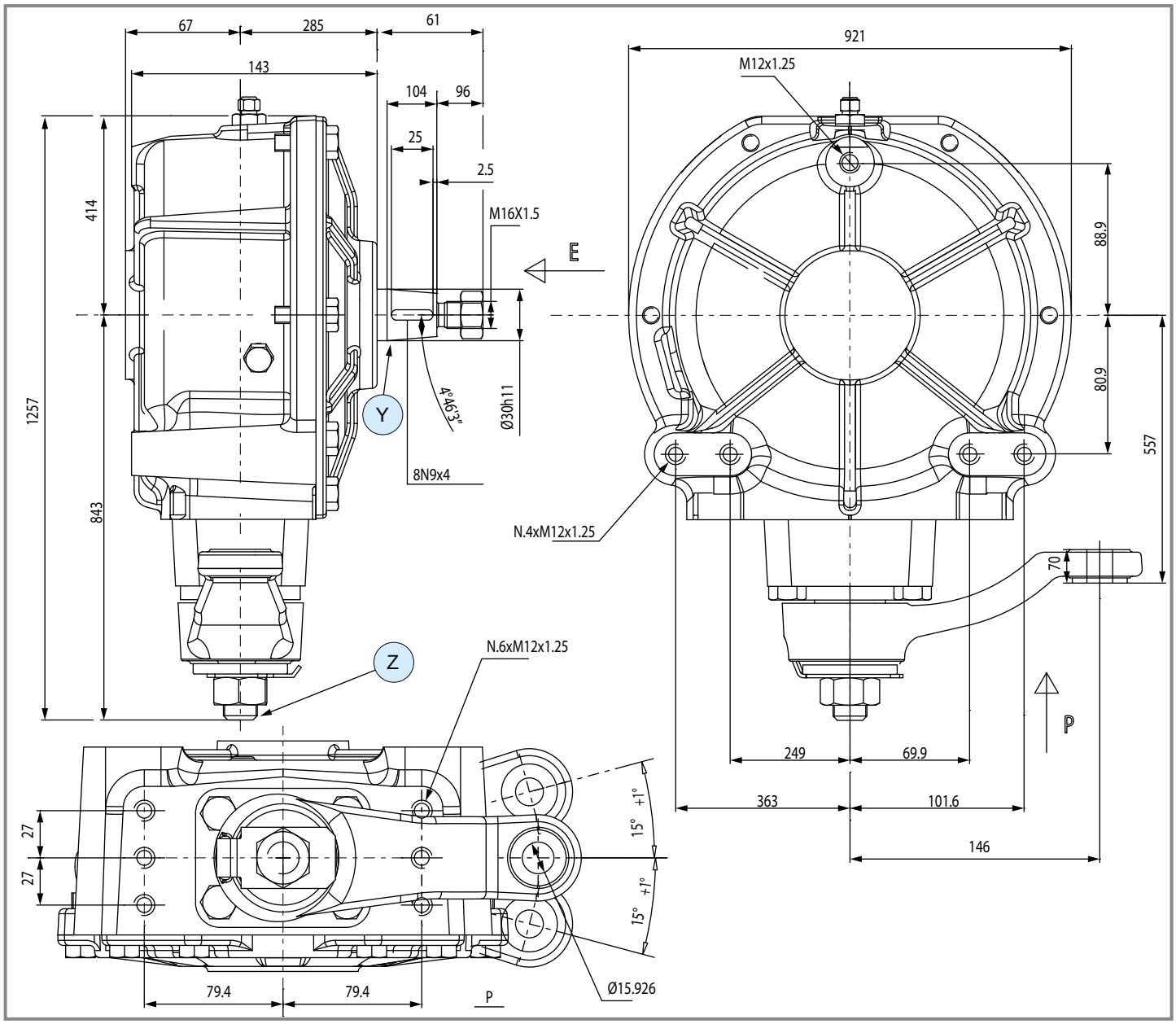

i	N_1 [rpm]	P_1 [kW]	M_2 [Nm]	Shaft type X	Shaft type Y	Shaft type Z	Input	Features	Code	Mounting	
-	550÷600	-	-	-	54 	56 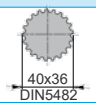	Y	-	9.861.001	-	std

LF-153A

(4.10)

Code **153**

[kg] 12 | [l]

Per configurazioni non a catalogo contattare Servizio Tecnico-Commerciale
For non-catalog configurations contact Technical-Commercial Service

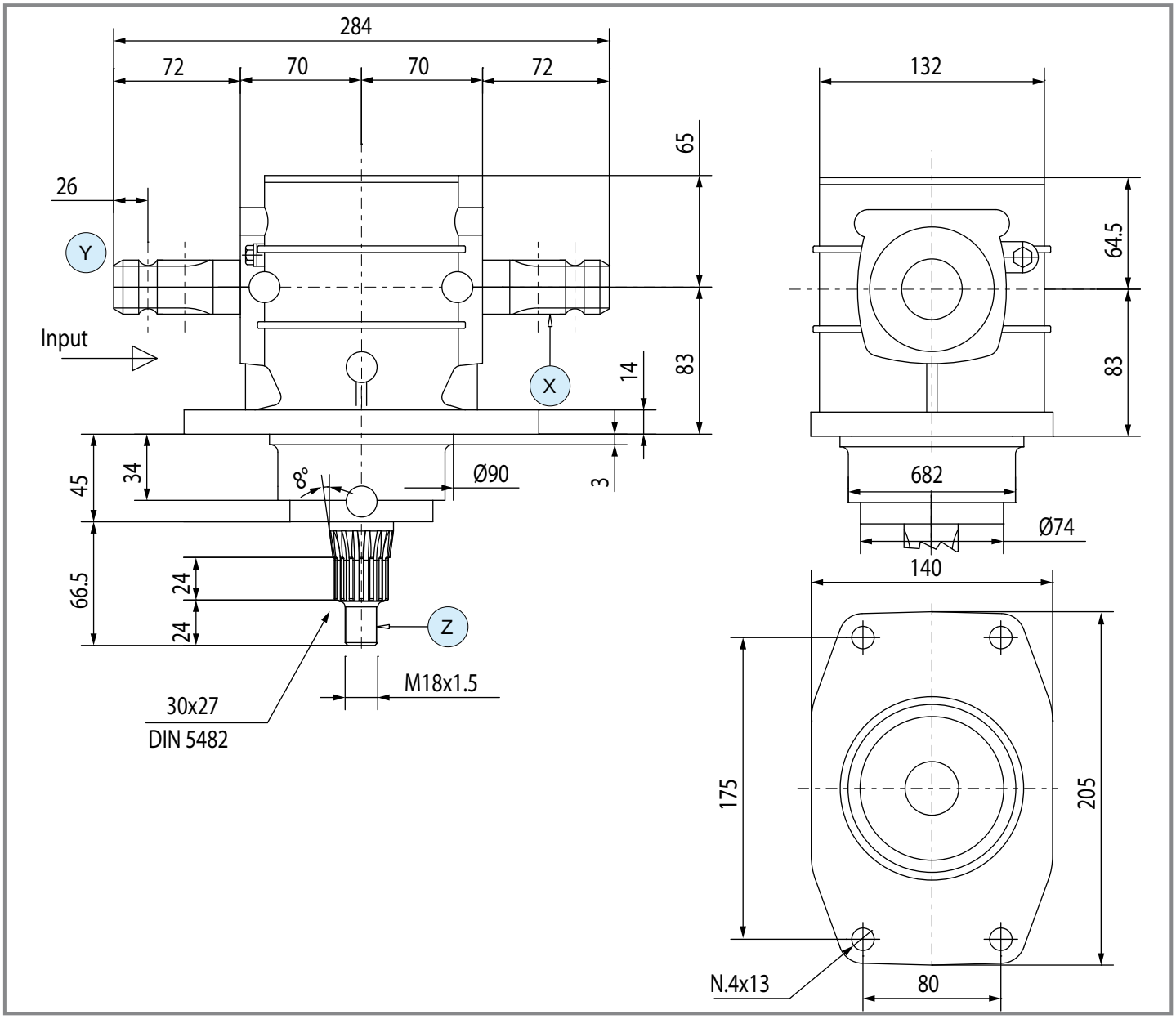

	i	N_1 [rpm]	P_1 [kW]	M_2 [Nm]	Shaft type X	Shaft type Y	Shaft type Z	Input	Features	Code	Mounting	
M	**2.80**	900	11.0	40	1 — 1" 3/8 Z6	1 — 1" 3/8 Z6	57 — 30x27 DIN5482	Y		9.153.209	27 / 28	std
	2.80	900	20.5	75	1 — 1" 3/8 Z6	1 — 1" 3/8 Z6	58 — 30x2x30x13x9g DIN5480	Y		9.153.210	27 / 28	std

comer industries

Questa pagina è lasciata intenzionalmente bianca
This page is intentionally left blank

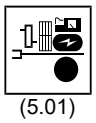
(5.01)

Gruppi elettrogeni / *P.T.O. generators*


(5.02)

Seghe circolari - a nastro/ *Circular saws - Belt saws*

Per configurazioni non a catalogo contattare Servizio Tecnico-Commerciale
For non-catalog configurations contact Technical-Commercial Service

	i	$M_{2\text{ - max}}$ [Nm]	Tipologia alberi disponibili *Available type of shafts*	p.
A-1B	M 7.0	30	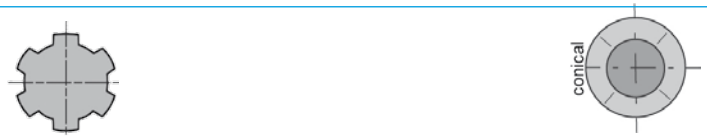	246
A-624B	M 3.5÷6.9	185	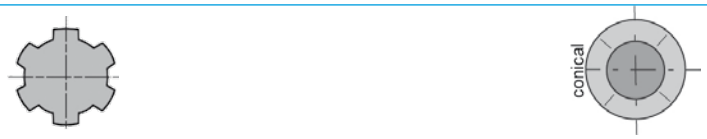	247
A-624C	M 3.5÷6.9	247	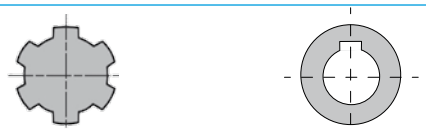	248
A-624E	M 3.5÷6.9	185	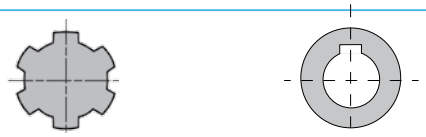	249
A-4F	M 3.8	340	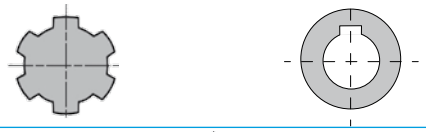	250
L-25A	M 1.9÷2.78	99	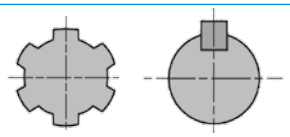	251
T-19G	M 1.85	115	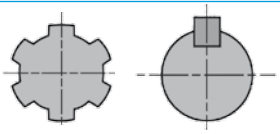	252
T-27A	M 1.92	195	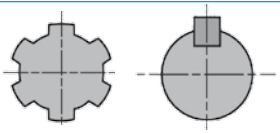	253

A-1B

Code **267**

(5.01)

[kg] 11 | [l] 0.5

Per configurazioni non a catalogo contattare Servizio Tecnico-Commerciale
For non-catalog configurations contact Technical-Commercial Service

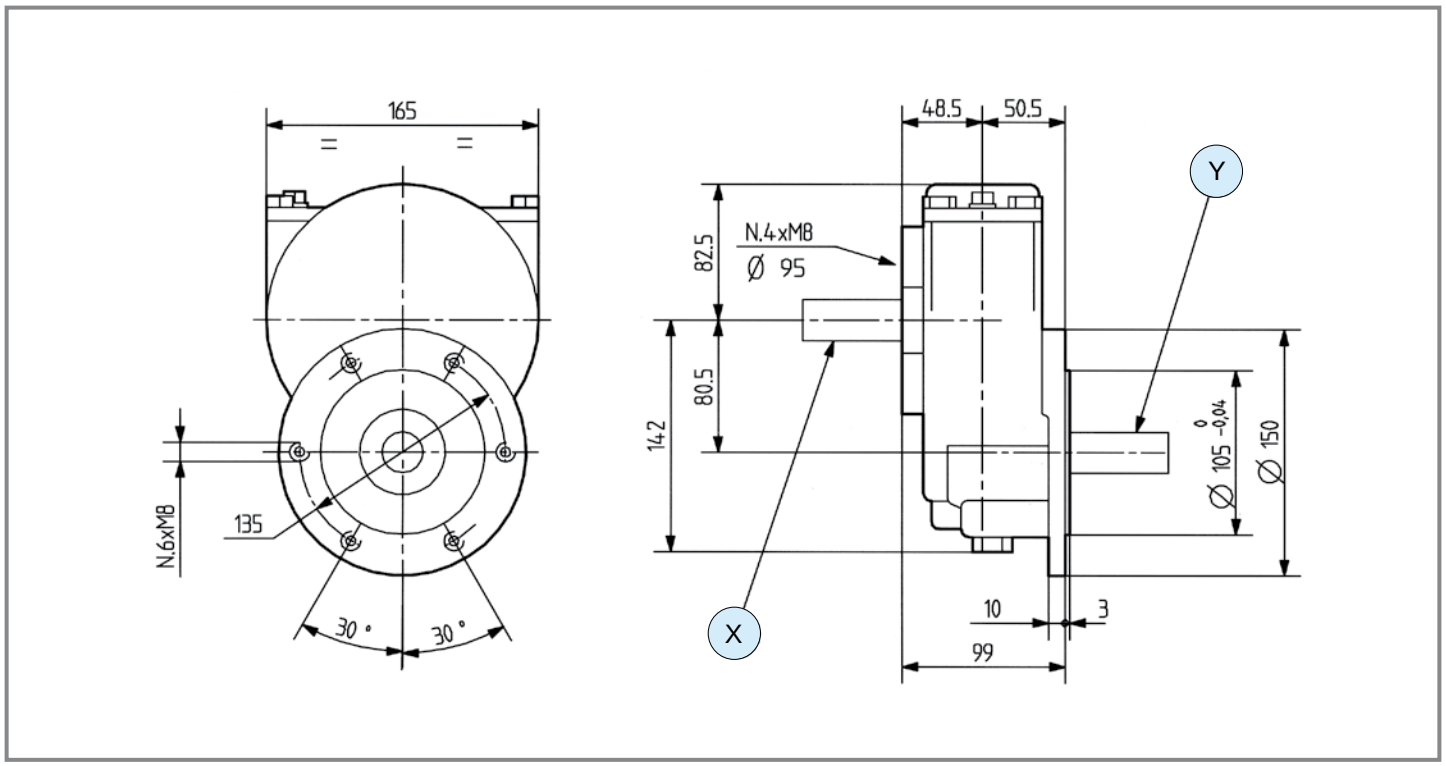

	i	N_1 [rpm]	P_1 [kW]	M_2 [Nm]	rpm Altern.	KVA	Shaft type X	Shaft type Y	Input	Flange type	Code	Mounting	
M	7	429	9.6	30	3000	8	1 	53 	X	-	9.600.005	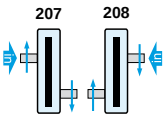	std

comer industries

A-624B

Code **624**

(5.01)

[kg] 17 | [l] 0.45

Per configurazioni non a catalogo contattare Servizio Tecnico-Commerciale
For non-catalog configurations contact Technical-Commercial Service

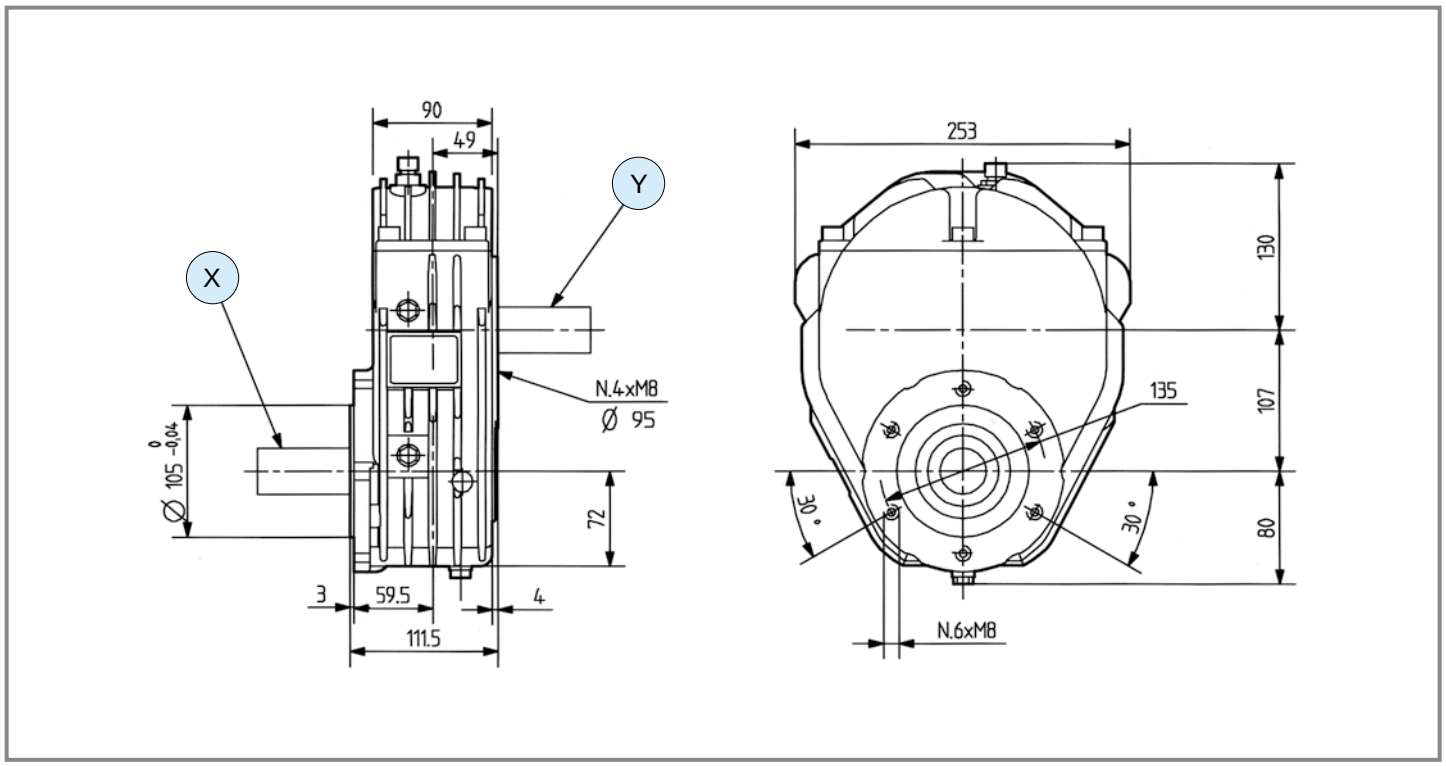

	i	N_1 [rpm]	P_1 [kW]	M_2 [Nm]	rpm Altern.	KVA	Shaft type X	Shaft type Y	Input	Flange type	Code	Mounting	
M	**3.50**	429	30	185	1500	29	52 	1 	Y	-	9.624.009	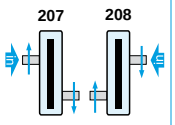	std
	6.90	435	22	68	3000	20	52 	1 	Y	-	9.624.001	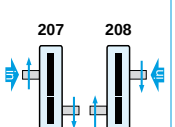	std

A-624C

Code **624**

(5.01)

[kg] 22 | [l] 0.5

Per configurazioni non a catalogo contattare Servizio Tecnico-Commerciale
For non-catalog configurations contact Technical-Commercial Service

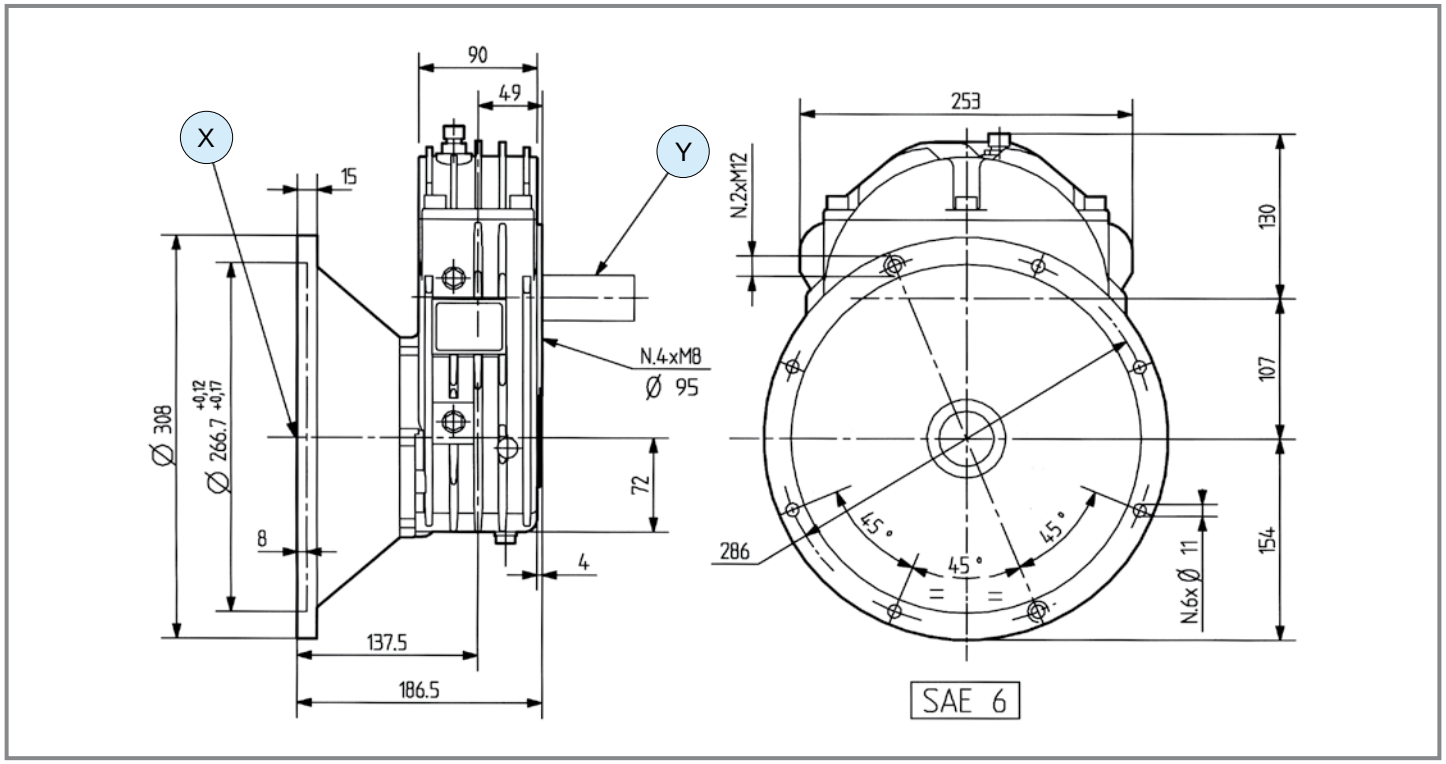

	i	N_1 [rpm]	P_1 [kW]	M_2 [Nm]	rpm Altern.	KVA	Shaft type X	Shaft type Y	Input	Flange type	Code	Mounting	
M	**3.5**	429	30	185	1500	29	76 ø42	1 1" 3/8 Z6	Y	SAE 6	9.624.008	207 208	std
	3.5	429	30	185	1500	29	77 ø48	1 1" 3/8 Z6	Y	SAE 6	9.624.010	207 208	std
	6.9	435	22	68	3000	20	76 ø42	1 1" 3/8 Z6	Y	SAE 6	9.624.007	207 208	std
	Rinforzato *Reinforced* **3.5**	429	40	247	1500	42	76 ø42	1 1" 3/8 Z6	Y	SAE 6	9.624.341	207 208	std

comer industries

A-624E

Code **624**

(5.01)

[kg] 20 | [l] 0.5

Per configurazioni non a catalogo contattare Servizio Tecnico-Commerciale
For non-catalog configurations contact Technical-Commercial Service

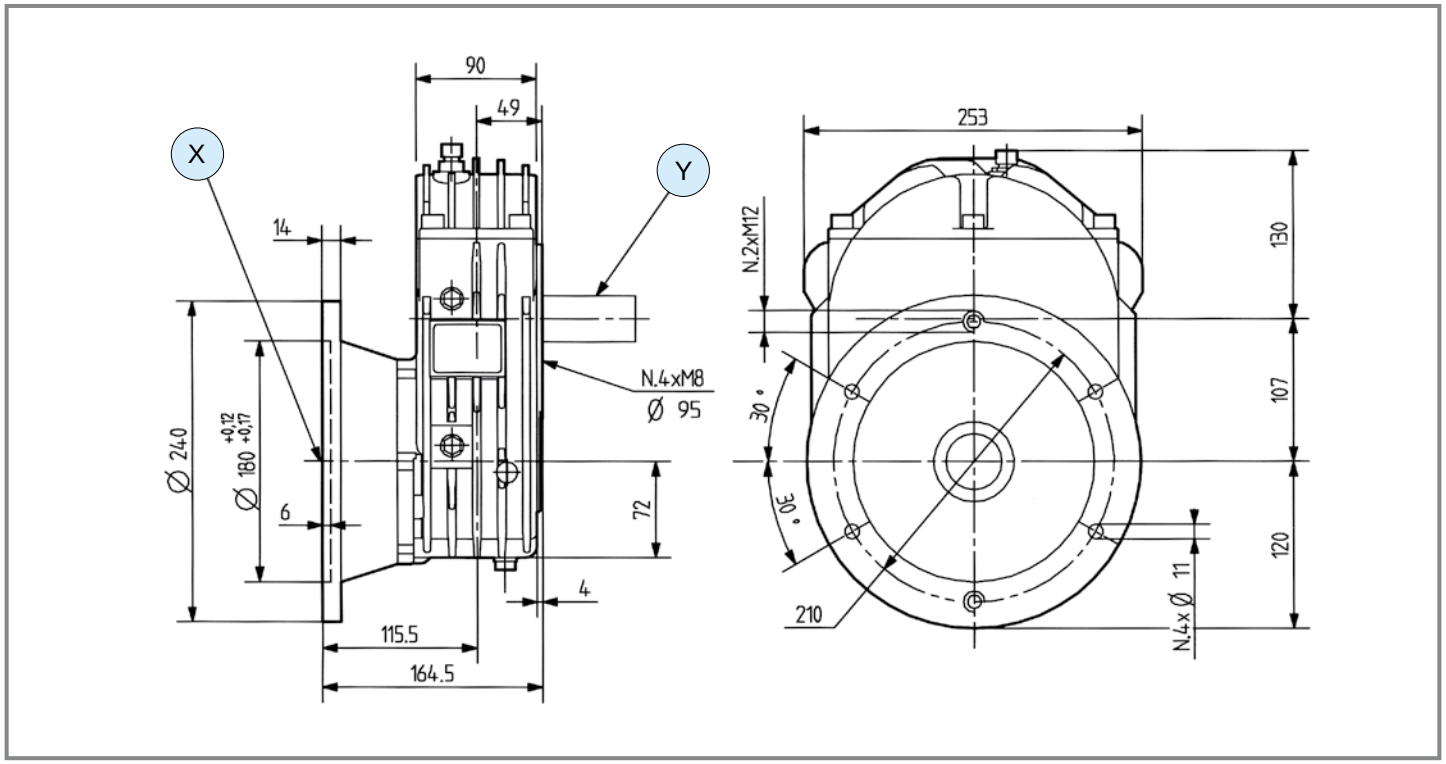

	i	N_1 [rpm]	P_1 [kW]	M_2 [Nm]	rpm Altern.	KVA	Shaft type X	Shaft type Y	Input	Flange type	Code	Mounting	
M	**3.5**	429	30	185	1500	29	75 ø35	1 1" 3/8 Z6	Y	-	9.624.011	207 208	std
	6.9	435	22	68	3000	20	75 ø35	1 1" 3/8 Z6	Y	-	9.624.005	207 208	std

A-4F

Code **603**

(5.01)

[kg] - [l] -

Per configurazioni non a catalogo contattare Servizio Tecnico-Commerciale
For non-catalog configurations contact Technical-Commercial Service

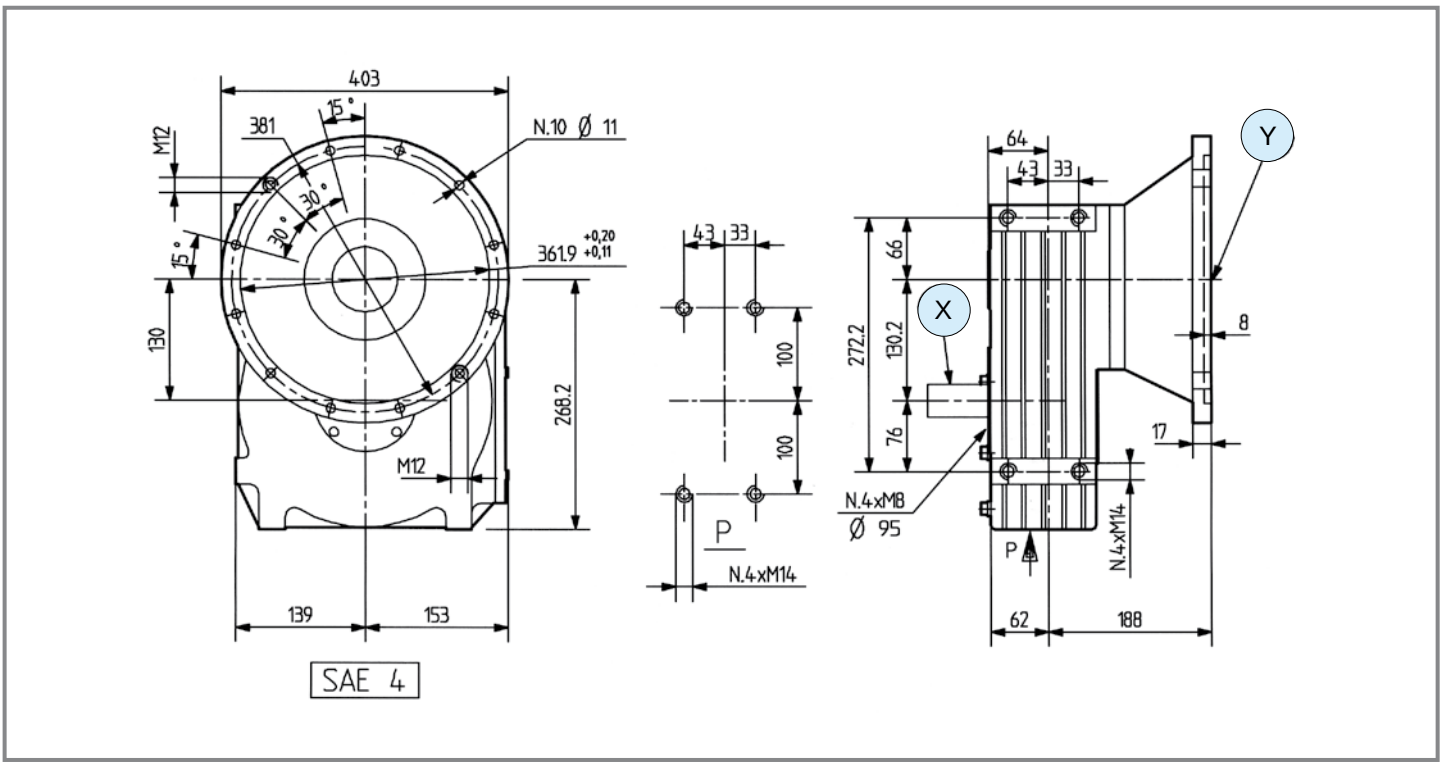

	i	N_1 [rpm]	P_1 [kW]	M_2 [Nm]	rpm Altern.	KVA	Shaft type X	Shaft type Y	Input	Flange type	Code	Mounting	
M	**3.8**	395	55	340	1500	47	1 — 1" 3/8 Z6	78 — ø55	X	SAE 6	9.603.347	207 208	std
M	Rinforzato *Reinforced* **3.8**	395	55	340	1500	62	1 — 1" 3/8 Z6	77 — ø48	X	SAE 6	9.603.341	207 208	std
	Rinforzato *Reinforced* **3.8**	395	55	340	1500	65	1 — 1" 3/8 Z6	79 — ø60	X	SAE 6	9.603.341	207 208	std

L-25A

Code **124**

(5.02)



[kg] 4.1 | [l] 0.4

Per configurazioni non a catalogo contattare Servizio Tecnico-Commerciale
For non-catalog configurations contact Technical-Commercial Service

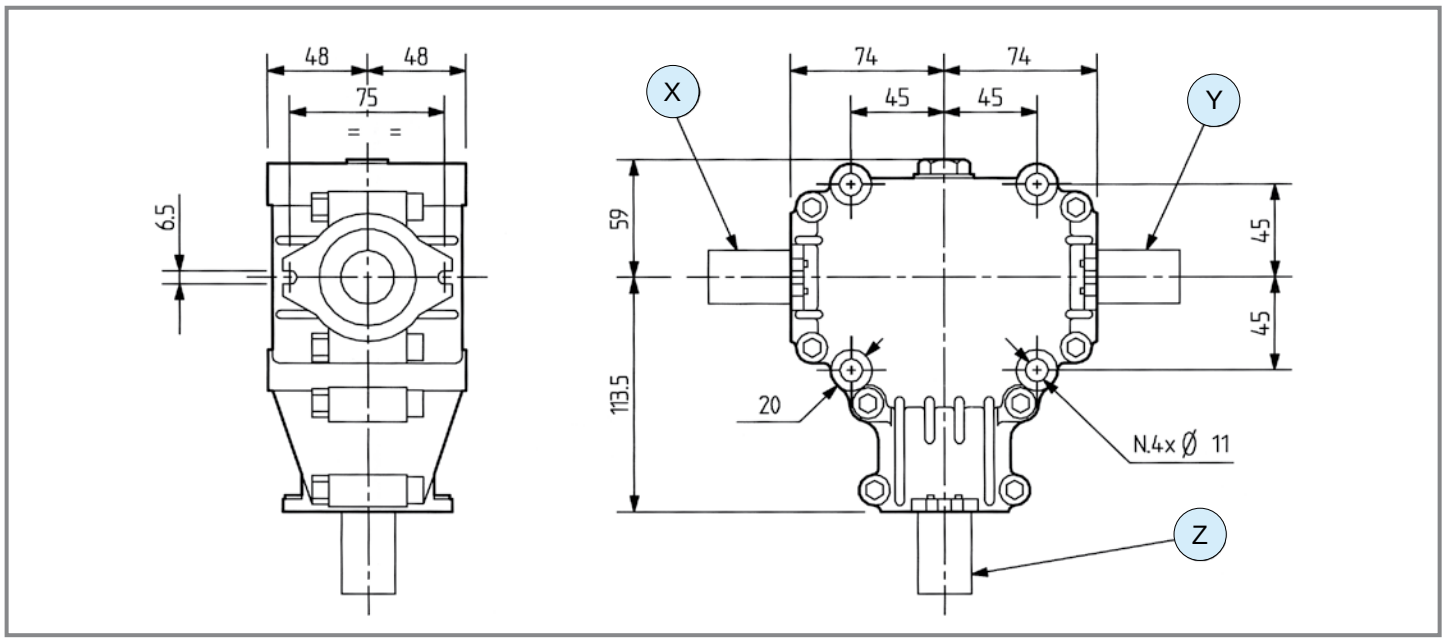

	i	N_1 [rpm]	P_1 [kW]	M_2 [Nm]	Shaft type X	Shaft type Y	Shaft type Z	Input	Code	Mounting	
	2.78	540	5.2	31	1 — 1" 3/8 Z6	-	12 — L 47 — ø 25	X	9.124.029	21 22	std
	2.78	540	5.2	31	-	1 — 1" 3/8 Z6	12 — L 47 — ø 25	Y	9.124.913	23 24	std
	2.78	540	5.2	31	-	1 — 1" 3/8 Z6	16 — L 47 — ø 22	Y	9.124.034	21 22	special
M	**1.9**	540	11	99	-	1 — 1" 3/8 Z6	16 — L 60 — ø 22	Y	9.124.900	23 24	special
	1.9	540	11	99	1 — 1" 3/8 Z6	-	12 — L 72 — ø 25	X	9.124.901	21 22	std
	1.9	540	11	99	-	1 — 1" 3/8 Z6	12 — L 72 — ø 25	Y	9.124.902	23 24	std
	1.9	540	11	99	12 — L 54 — ø 25	12 — L 54 — ø 25	1 — 1" 3/8 Z6	Z	9.124.912	33 34	std

T-19G

Code **259**

(5.02)



[kg] 14 | [l] 0.9

Per configurazioni non a catalogo contattare Servizio Tecnico-Commerciale
For non-catalog configurations contact Technical-Commercial Service

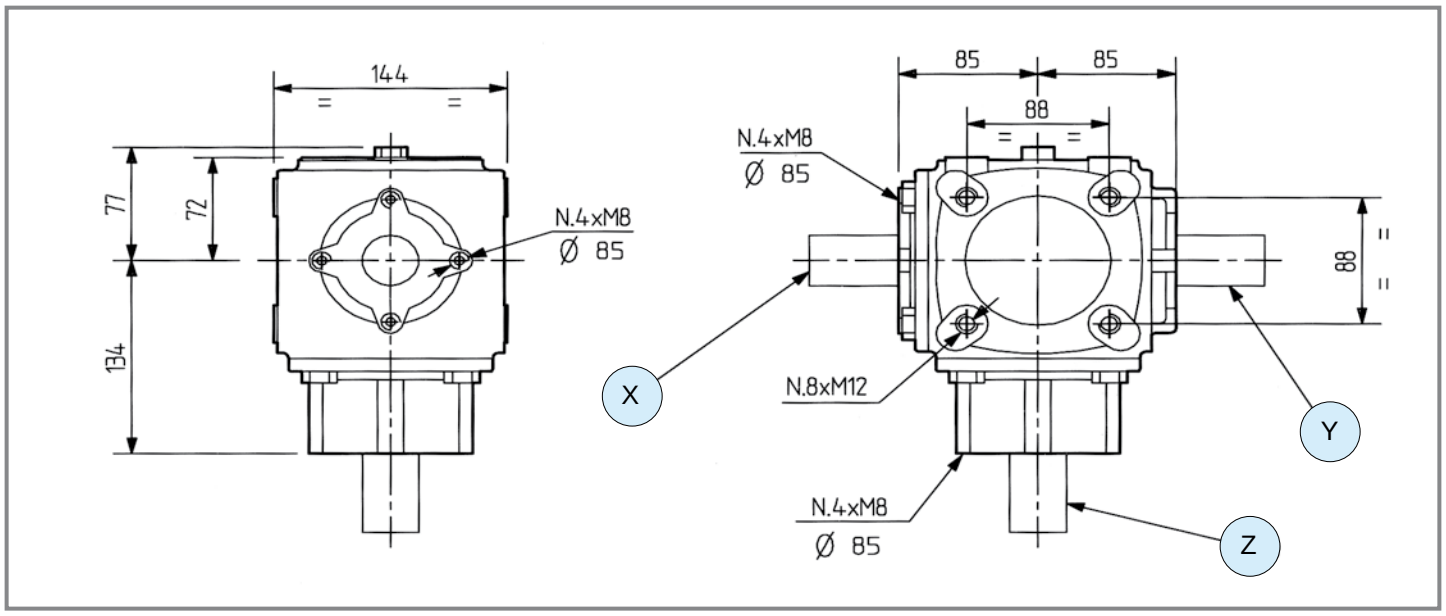

	i	N_1 [rpm]	P_1 [kW]	M_2 [Nm]	Shaft type X	Shaft type Y	Shaft type Z	Input	Code	Mounting	
M	**1.85**	540	12.5	115	-	18 L 60 ø 30	1 1" 3/8 Z6	Z	9.259.917	31 32	std
	1.85	540	12.5	115	18 L 60 ø 30	18 L 60 ø 30	1 1" 3/8 Z6	Z	9.259.918	33 34	std

comer industries

T-27A

Code **267**

(5.02)



[kg] 21 | [l] 1.2

Per configurazioni non a catalogo contattare Servizio Tecnico-Commerciale
For non-catalog configurations contact Technical-Commercial Service

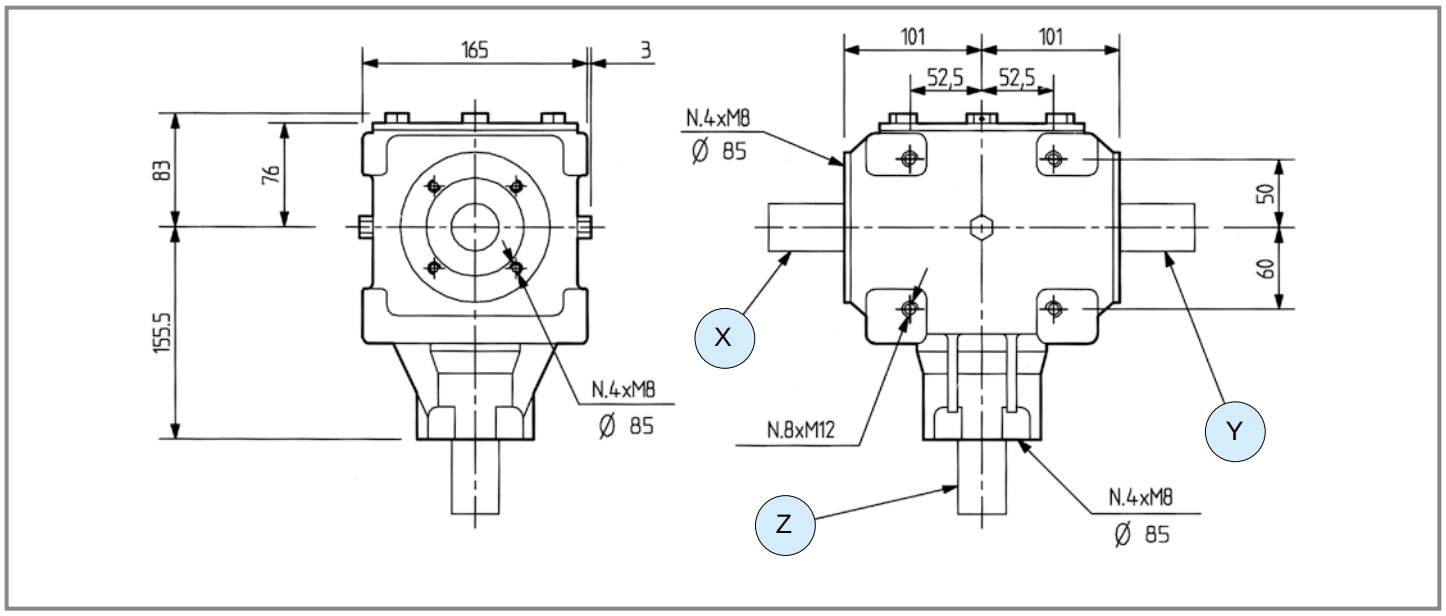

	i	N_1 [rpm]	P_1 [kW]	M_2 [Nm]	Shaft type X	Shaft type Y	Shaft type Z	Input	Code	Mounting	
M	**1.92**	540	22.1	195	3 L 68 ø 35	3 L 68 ø 35	1 1" 3/8 Z6	Z	9.267.034	33 34	std

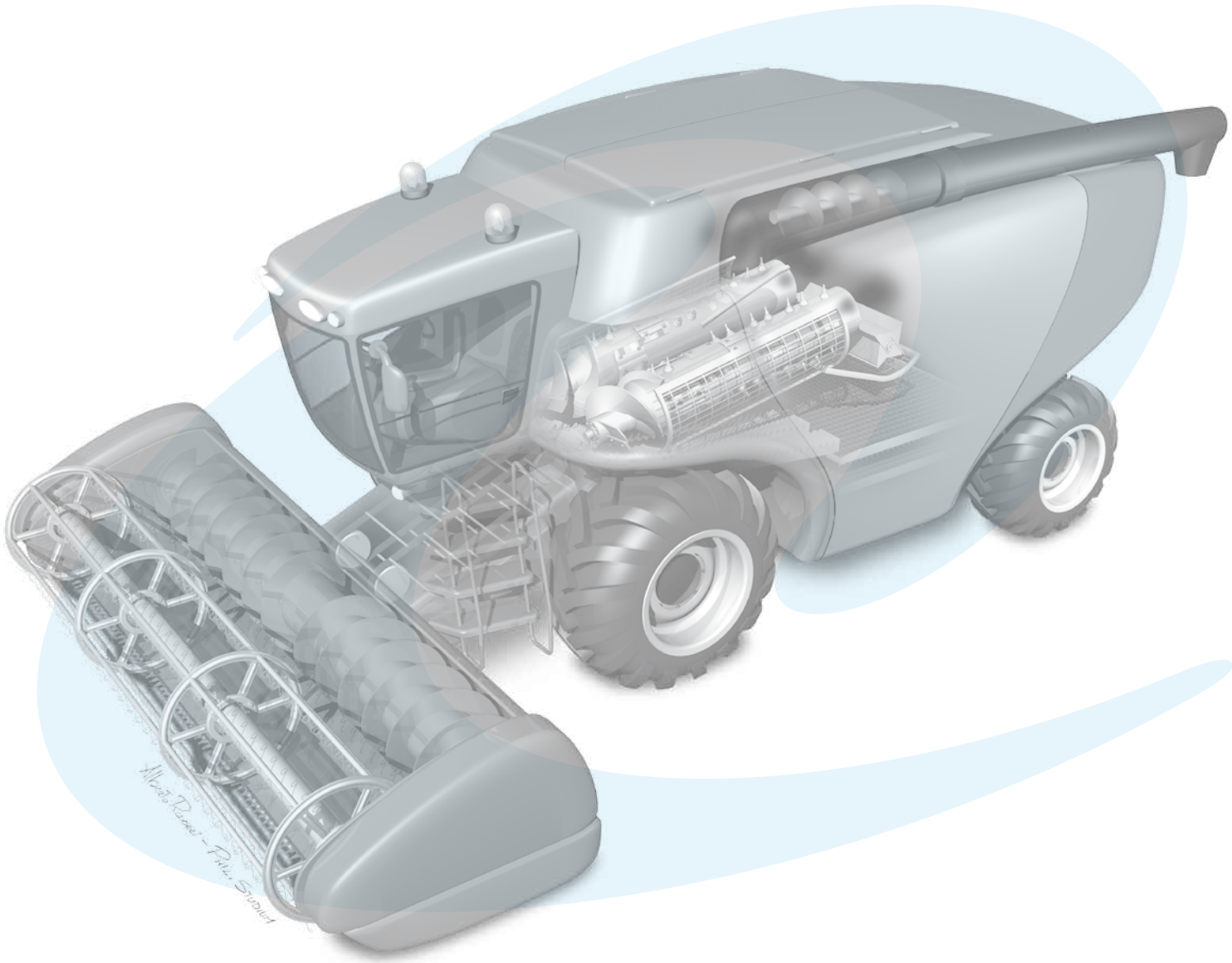

(6.01) Cinematismi per mietitrebbie
Combine Harvester Solution

(6.02) Cinematismi per trincia semoventi
Forage Harvester Driveline Solution

(6.03) Cinematismi per macchine semoventi
Self-propelled Windrower Solution

Per configurazioni non a catalogo contattare Servizio Tecnico-Commerciale
For non-catalog configurations contact Technical-Commercial Service

			p.
CINEMATISMI PER MIETITREBBIE ***COMBINE HARVESTER SOLUTIONS***			
(1)	Riduttori ad assi paralleli per azionamento pompe idrauliche	*Parallel Axle Reducers for Hydraulic Pump Drive*	256
(2)	Gruppo ruota	*Final drive*	256
(3)	Ponte differenziale pivottante e sterzante	*Upper Pivot Sterring Axle*	256
(4)	Gruppi angolari per azionamenti trinciapaglia	*Bevel Gearboxes for Straw Chopper*	256
(5)	Riduttore scarico grano superiore	*Gearbox Upper Unload*	257
(6)	Riduttore scarico grano inferiore	*Gearbox Bottom Unload*	257
(7)	Riduttore azionamento rotore	*Rotor Gearbox*	257
(8)	Riduttore multivelocità per azionamento motore	*Multispeed Rotor Gearbox*	257
CINEMATISMI PER TRINCIA SEMOVENTI ***FORAGE HARVESTER DRIVELINE SOLUTION***			
(1)	Riduttore per azionamento trasmissione trincia	*Input Gearbox of the Main Chopper Drive*	258
(2)	Riduttore per azionamento radiatore	*Exchanger Fan Drive*	258
(3)	Cinematismo integrato trincia	*Integrated Driveline for Chopper*	259
(4)	Cinematismo alimentazione tubo di lancio	*Blower Driveline*	259
CINEMATISMI PER MACCHINE SEMOVENTI ***SELF-PROPELLED WINDROWER SOLUTIONS***			
(1)	Riduttori ad assi paralleli per azionamento pompe idrauliche	*Parallel Axles Reducers for Hydraulic Pump Drive*	260
(2)	Riduttori ruota	*Wheel Drives*	261

Cinematismi per mietitrebbie
Combine Harvester Solution

(6.01)

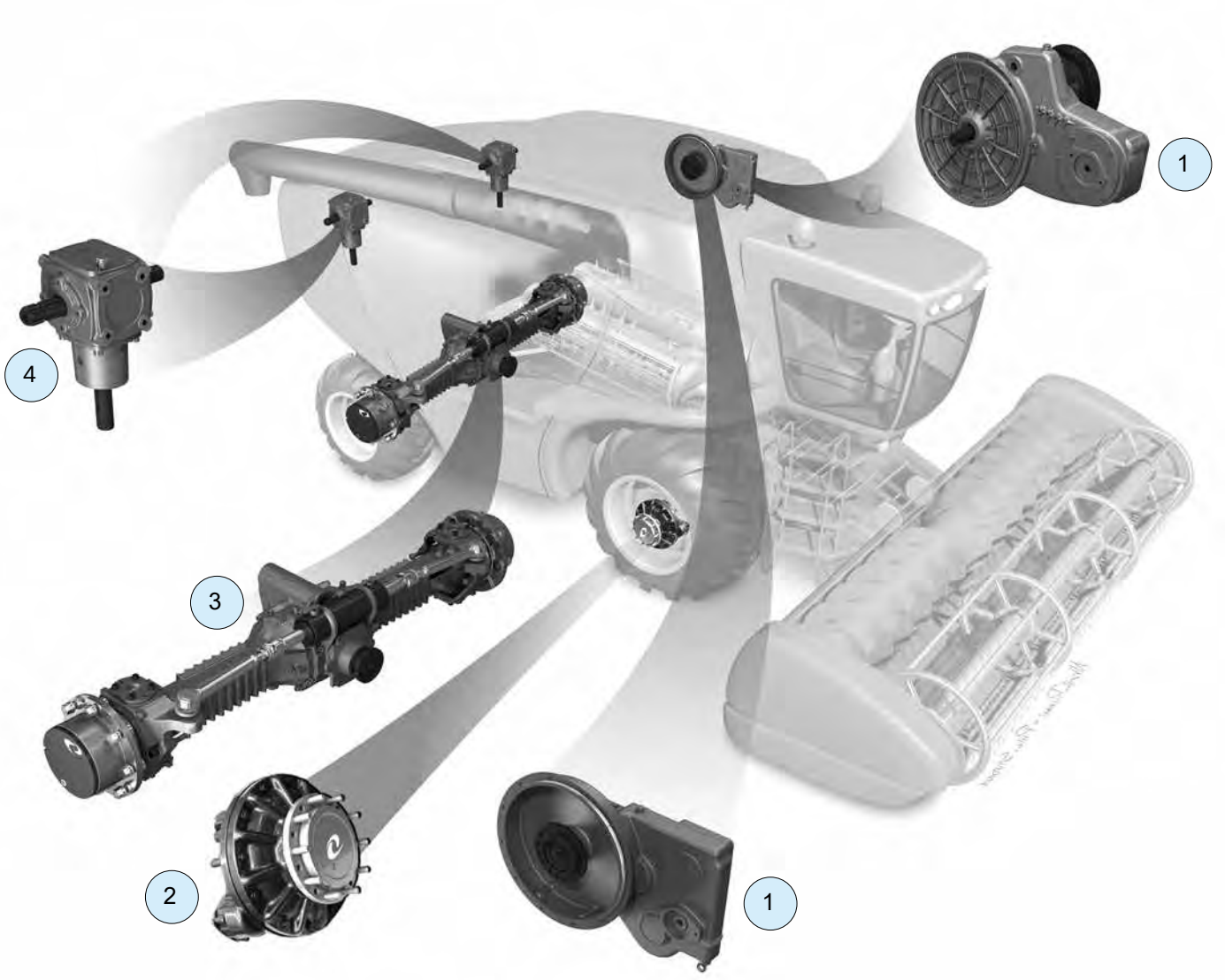

(1)	Riduttori ad assi paralleli per azionamento pompe idrauliche	*Parallel Axle Reducers for Hydraulic Pump Drive*
(2)	Gruppo ruota	*Final drive*
(3)	Ponte differenziale pivottante e sterzante	*Upper Pivot Sterring Axle*
(4)	Gruppi angolari per azionamenti trinciapaglia	*Bevel Gearboxes for Straw Chopper*

Cinematismi per mietitrebbie
Combine Harvester Solution

(6.01)



(5)	Riduttore scarico grano superiore	*Gearbox Upper Unload*
(6)	Riduttore scarico grano inferiore	*Gearbox Bottom Unload*
(7)	Riduttore azionamento rotore	*Rotor Gearbox*
(8)	Riduttore multivelocità per azionamento motore	*Multispeed Rotor Gearbox*

Cinematismi per trincia semoventi
Forage Harvester Driveline Solution

(6.02)

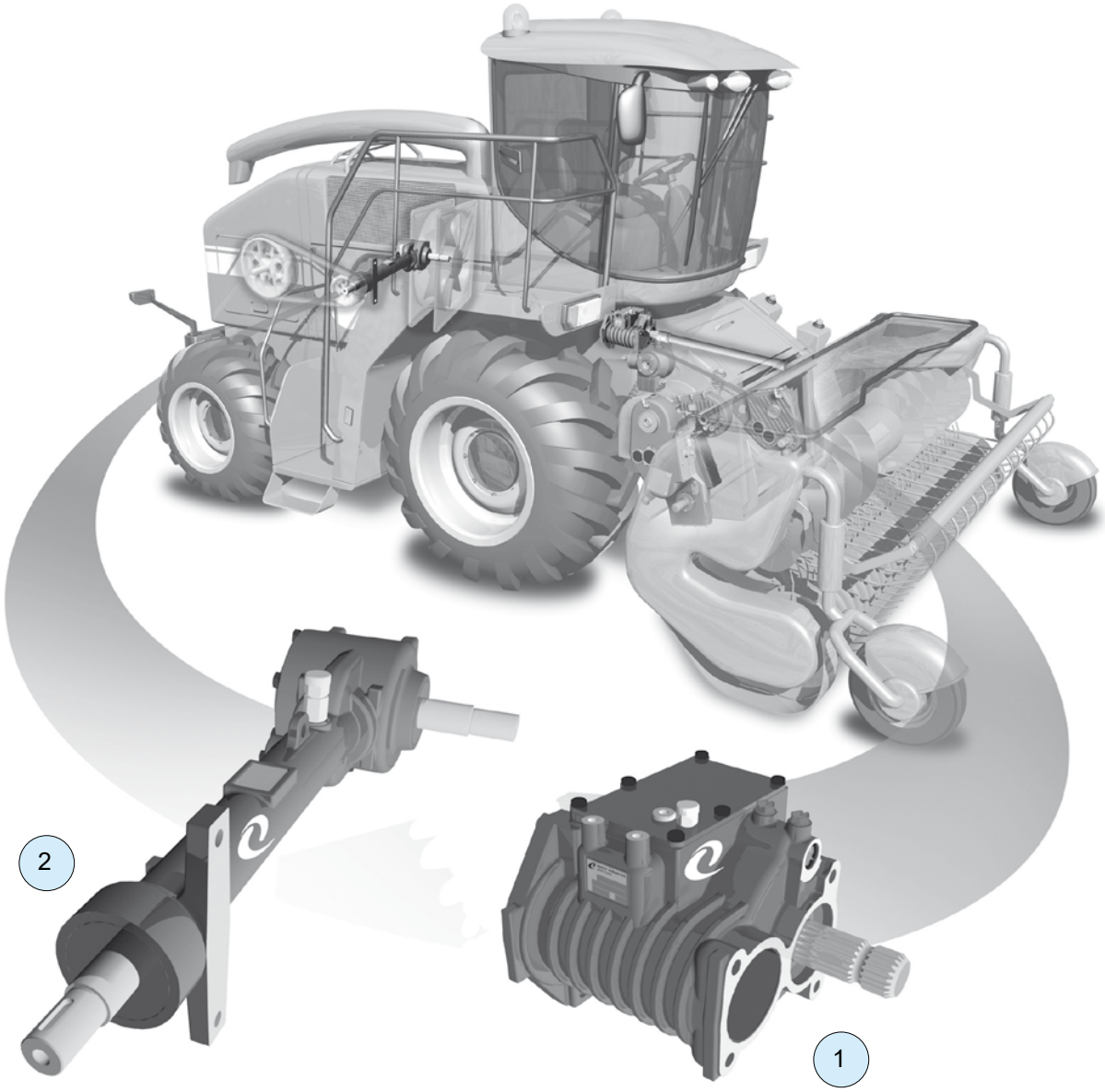

(1)	Riduttore per azionamento trasmissione trincia	*Input Gearbox of the Main Chopper Drive*
(2)	Riduttore per azionamento radiatore	*Exchanger Fan Drive*

Cinematismi per trincia semoventi
Forage Harvester Driveline Solution

(6.02)

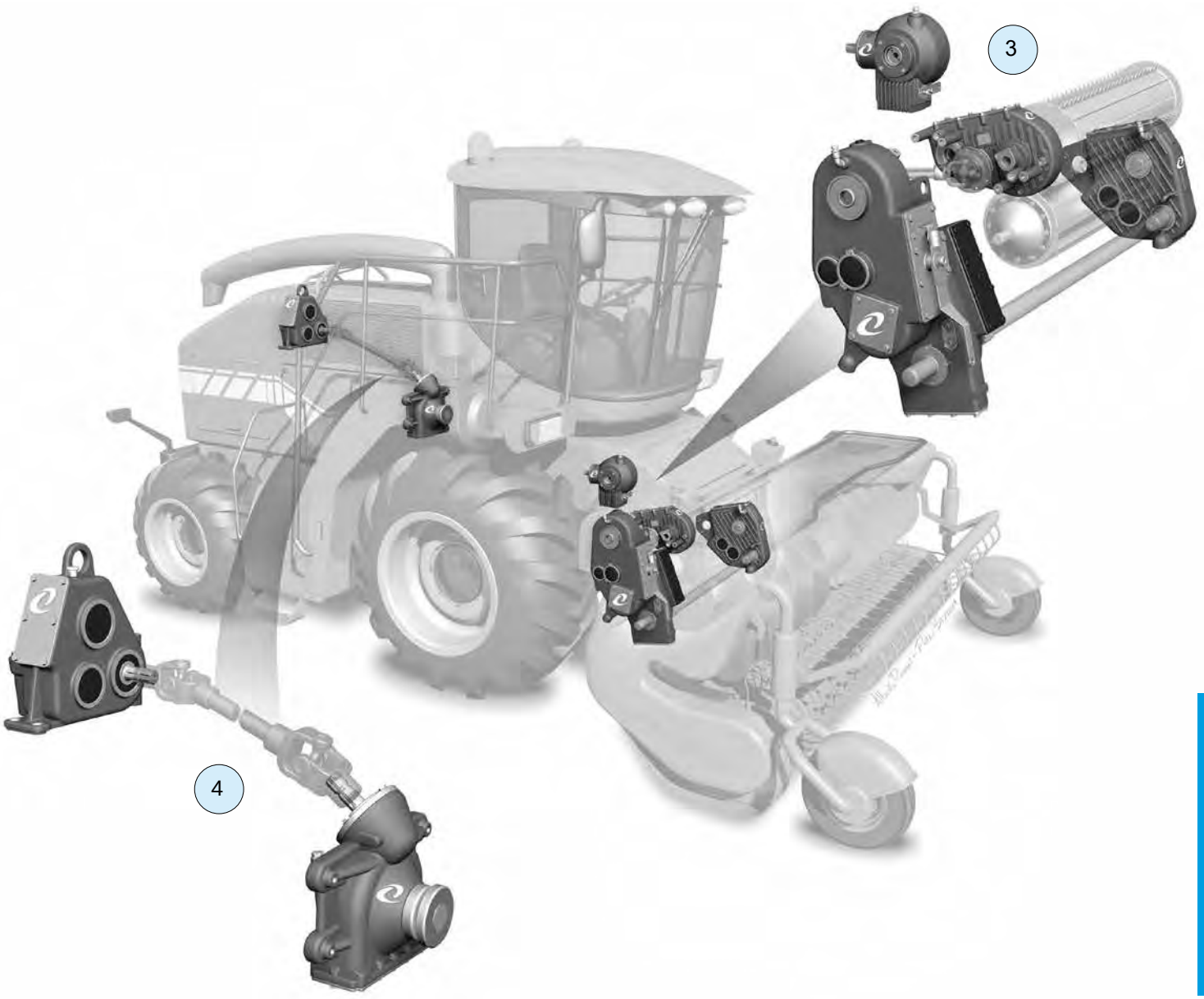

(3)	Cinematismo integrato trincia	*Integrated Driveline for Chopper*
(4)	Cinematismo alimentazione tubo di lancio	*Blower Driveline*

Cinematismi per macchine semoventi
Self-propelled Windrower Solution

(6.03)

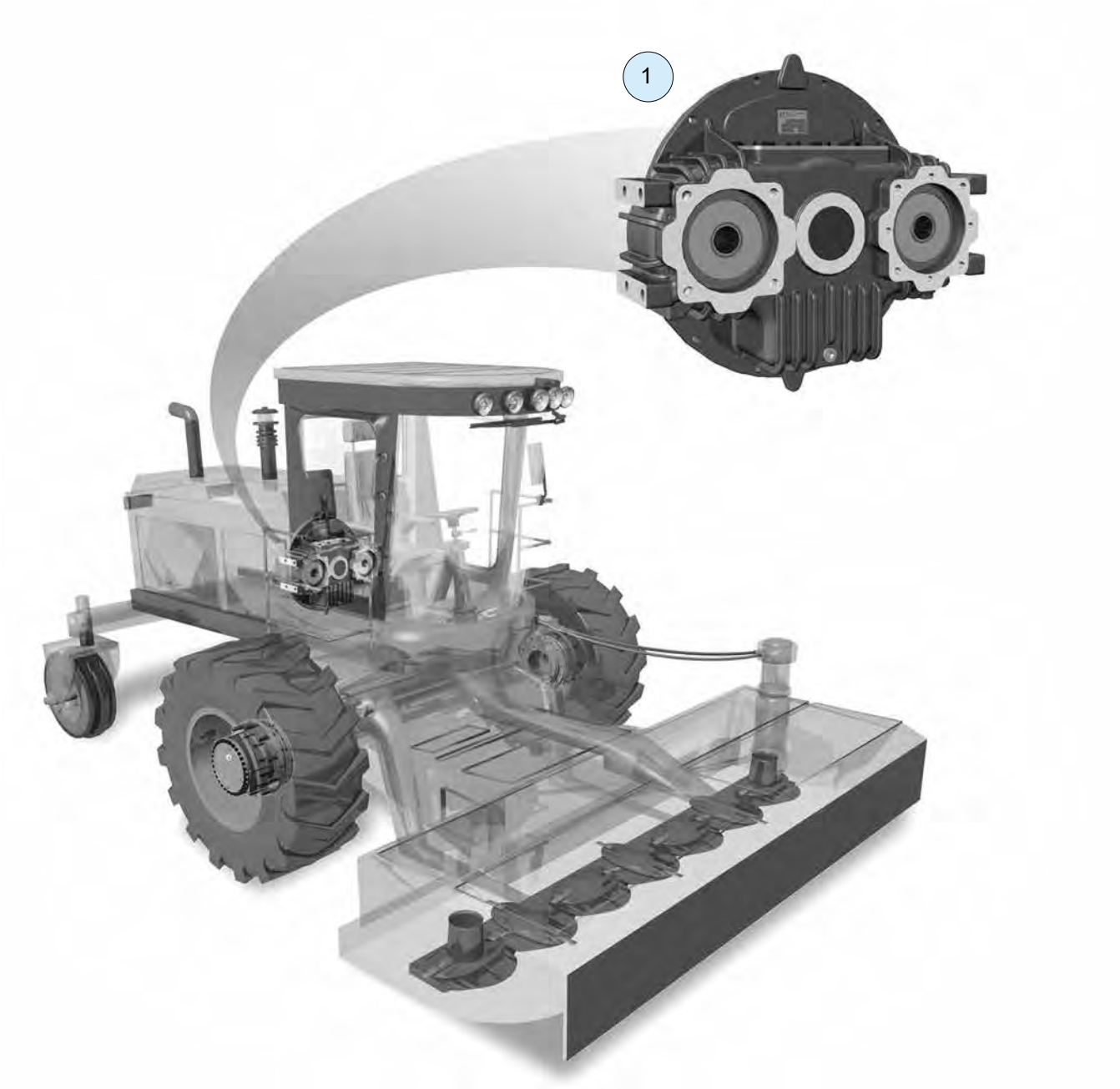

(1)	Riduttori ad assi paralleli per azionamento pompe idrauliche	*Parallel Axle Reducer for Hydraulic Pump Drive*

Cinematismi per macchine semoventi
Self-propelled Windrower Solution

(6.03)

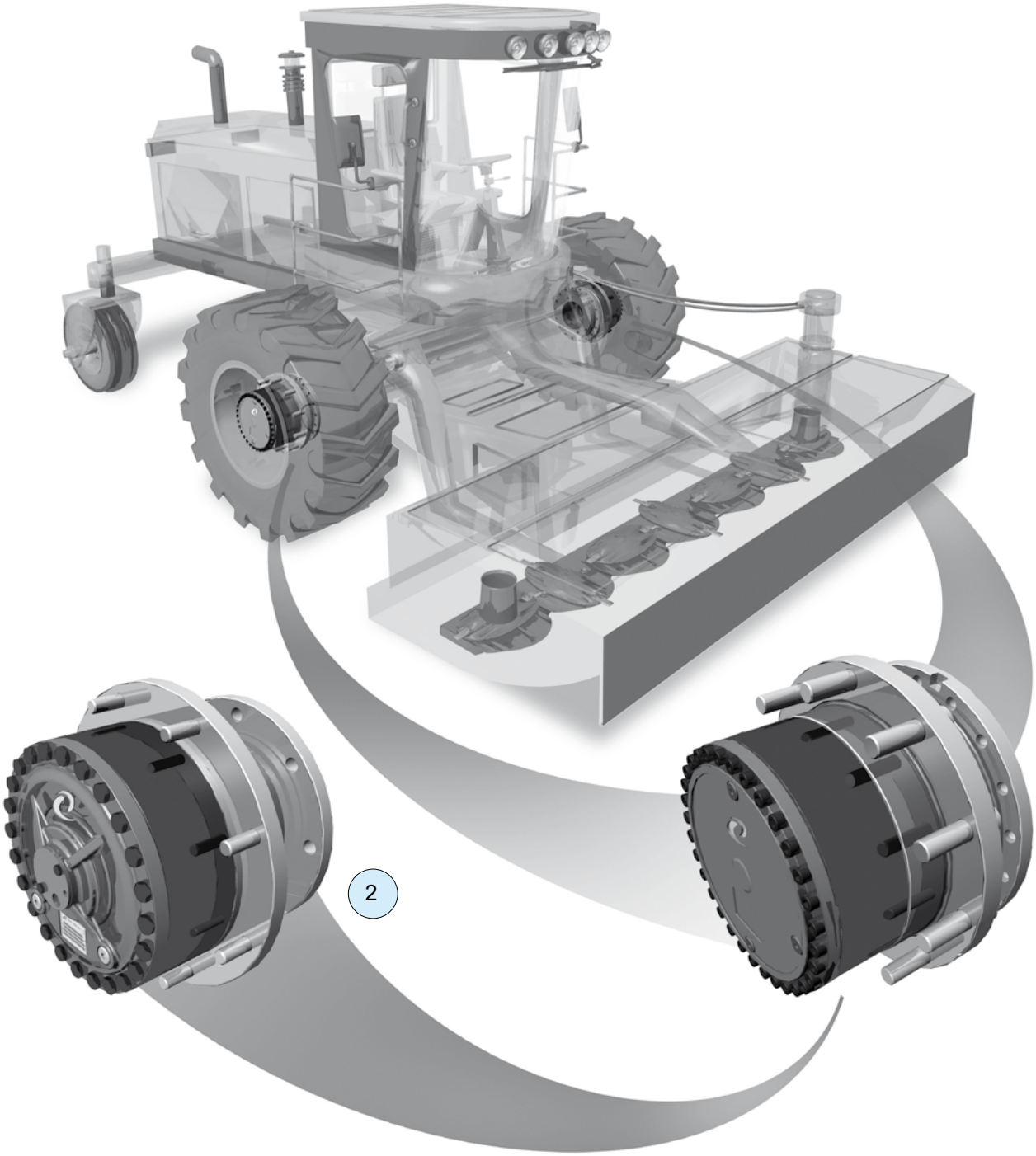

(2)	Riduttori ruota	*Wheel Drives*

Tipo *Type*	Applicazioni *Applications*		p.
A-16A	Gamma assi paralleli applicazioni generiche / *Generic Application Parallel Gearboxes*	(0.02)	61
A-1A	Gamma assi paralleli applicazioni generiche / *Generic Application Parallel Gearboxes*	(0.02)	50
A-1B	Gruppi elettrogeni / *P.T.O. Generators*	(5.01)	246
A-20A	Gamma assi paralleli applicazioni generiche / *Generic Application Parallel Gearboxes*	(0.02)	60
A-3A	Gamma assi paralleli applicazioni generiche / *Generic Application Parallel Gearboxes*	(0.02)	52
A-4A	Gamma assi paralleli applicazioni generiche / *Generic Application Parallel Gearboxes*	(0.02)	56
A-4A	Pompe centrifughe per irrigazione / *Centrifugal Pumps for Irrigation*	(3.03)	168
A-4F	Gruppi elettrogeni / *P.T.O. Generators*	(5.01)	250
A-613R	Carri miscelatori / *Feed Mixer Machines*	(4.06)	216
A-614R	Carri miscelatori / *Feed Mixer Machines*	(4.06)	217
A-623A	Gamma assi paralleli applicazioni generiche / *Generic Application Parallel Gearboxes*	(0.02)	59
A-624A	Gamma assi paralleli applicazioni generiche / *Generic Application Parallel Gearboxes*	(0.02)	51
A-624B	Gruppi elettrogeni / *P.T.O. Generators*	(5.01)	247
A-624C	Gruppi elettrogeni / *P.T.O. Generators*	(5.01)	248
A-624E	Gruppi elettrogeni / *P.T.O. Generators*	(5.01)	249
A-629A	Gamma assi paralleli applicazioni generiche / *Generic Application Parallel Gearboxes*	(0.02)	58
A-629A	Pompe centrifughe per irrigazione / *Centrifugal Pumps for Irrigation*	(3.03)	169
A-640A	Decespugliatori idraulici / *Hydraulic Cutters*	(1.05)	109
A-649A	Decespugliatori idraulici / *Hydraulic Cutters*	(1.05)	108
C-3A	Carri miscelatori / *Feed Mixer Machines*	(4.06)	214
D-21A	Atomizzatori / *Sprayers*	(3.01)	156
D-21A double	Atomizzatori / *Sprayers*	(3.01)	158
D-21B	Atomizzatori / *Sprayers*	(3.01)	157
D-21F	Atomizzatori / *Sprayers*	(3.01)	157
D-27A	Atomizzatori / *Sprayers*	(3.01)	154
D-27B	Atomizzatori / *Sprayers*	(3.01)	155
D-27J	Atomizzatori / *Sprayers*	(3.01)	155
D-732A	Carri miscelatori / *Feed Mixer Machines*	(4.06)	231
D-741A	Irrigatori a bobina / *Irrigation Reels*	(3.04)	170

Tipo *Type*	Applicazioni *Applications*		p.
D-742A	Irrigatori a bobina / *Irrigation Reels*	(3.04)	176
D-743A	Irrigatori a bobina / *Irrigation Reels*	(3.04)	171
D-744A	Irrigatori a bobina / *Irrigation Reels*	(3.04)	174
D-745A	Irrigatori a bobina / *Irrigation Reels*	(3.04)	172
D-7A	Atomizzatori / *Sprayers*	(3.01)	152
D-7B	Atomizzatori / *Sprayers*	(3.01)	153
D-825A	Erpici rotanti / *Rotary Harrows*	(2.03)	143
DP-732B	Carri miscelatori e lancia paglia / *Feed Mixer Machines and Straw Blower*	(4.06) (4.09)	213
DTU-742A	Irrigatori a bobina / *Irrigation Reels*	(3.04)	177
DTU-744A	Irrigatori a bobina / *Irrigation Reels*	(3.04)	175
DTU-745A	Irrigatori a bobina / *Irrigation Reels*	(3.04)	173
DV-733F	Erpici rotanti / *Rotary Harrows*	(2.03)	141
DV-813F	Erpici rotanti / *Rotary Harrows*	(2.03)	134
DV-818F	Erpici rotanti / *Rotary Harrows*	(2.03)	137
DV-823F	Erpici rotanti / *Rotary Harrows*	(2.03)	139
DZ-811F	Zappatrici - Fresatrici / *Rotary Tillers*	(2.01)	124
DZ-816F	Zappatrici - Fresatrici / *Rotary Tillers*	(2.01)	126
DZ-821F	Zappatrici - Fresatrici / *Rotary Tillers*	(2.01)	128
FR-507	Falciatrici rotative / *Cutter Bars*	(4.01)	180
FR-522	Falciatrici rotative / *Cutter Bars*	(4.01)	181
FR-567	Falciatrici rotative / *Cutter Bars*	(4.01)	182
K-789A	Giroandanatori / *Rotary Rakes*	(4.02)	192
K-791A	Giroandanatori / *Rotary Rakes*	(4.02)	193
K-792A	Giroandanatori / *Rotary Rakes*	(4.02)	194

Tipo *Type*	Applicazioni *Applications*		p.
K-794A	Giroandanatori / *Rotary Rakes*	(4.02)	195
K-795T	Giroandanatori / *Rotary Rakes*	(4.02)	196
K-799A	Giroandanatori / *Rotary Rakes*	(4.02)	197
L-150C	Spandiconcime / *Fertilizer Spreaders*	(3.02)	163
L-150J	Gamma angolari applicazioni generiche / *Generic Application Angular Gearboxes*	(0.01)	10
I-150J	Spandiconcime / *Fertilizer Spreaders*	(3.02)	162
L-170B	Punte da mais / *Corn Headers*	(4.08)	234
L-196J	Trivelle / *Post Hole Diggers*	(2.04)	147
L-25A	Gamma angolari applicazioni generiche / *Generic Application Angular Gearboxes*	(0.01)	12
L-25A	Trinciastocchi / *Flail Mowers*	(1.01)	68
L-25A	Seghe circolari e a nastro / *Circular Saws and Belt Saws*	(5.02)	251
L-25C	Spandiconcime / *Fertilizer Spreaders*	(3.02)	164
L-25J	Gamma angolari applicazioni generiche / *Generic Application Angular Gearboxes*	(0.01)	12
L-25J	Trinciastocchi / *Flail Mowers*	(1.01)	68
L-25J	Spandiconcime / *Fertilizer Spreaders*	(3.02)	165
L-281A	Gamma angolari applicazioni generiche / *Generic Application Angular Gearboxes*	(0.01)	14
L-281J	Gamma angolari applicazioni generiche / *Generic Application Angular Gearboxes*	(0.01)	14
L-5A	Gamma angolari applicazioni generiche / *Generic Application Angular Gearboxes*	(0.01)	11
L-5A	Trinciastocchi / *Flail Mowers*	(1.01)	66
LB-324J	Spandifieno rotativi / *Rotary Tedders*	(4.05)	203
LF-125J	Decespugliatrici / *Rotary Cutters*	(1.03)	94
LF-139A	Decespugliatrici / *Rotary Cutters*	(1.03)	92
LF-140A	Decespugliatrici / *Rotary Cutters*	(1.03)	89
LF-140J	Decespugliatrici / *Rotary Cutters*	(1.03)	89

Tipo *Type*	Applicazioni *Applications*		p.
LF-142A	Falciatrici rotative / *Cutter Bars*	(4.01)	183
LF-149B	Decespugliatrici / *Rotary Cutters*	(1.03)	91
LF-151A	Falciadistruggierba / *Rotary Mowers*	(1.02)	87
LF-153A	Gruppi testate da grano e girasole / *Grain Header and Sunflower Headers*	(4.10)	242
LF-205J	Decespugliatrici / *Rotary Cutters*	(1.03)	88
LF-211J	Falciadistruggierba / *Rotary Mowers*	(1.02)	86
LF-227J	Decespugliatrici / *Rotary Cutters*	(1.03)	93
LF-32A	Decespugliatrici / *Rotary Cutters*	(1.03)	90
LL-5L	Trinciastocchi / *Flail Mowers*	(1.01)	67
LTV-14F	Erpici rotanti / *Rotary Harrows*	(2.03)	131
M-797A	Punte da mais / *Corn Headers*	(4.08)	237
MR-90	Gamma assi paralleli applicazioni generiche / *Generic Application Parallel Gearboxes*	(0.02)	54
MV-814F	Erpici rotanti / *Rotary Harrows*	(2.03)	135
MV-817F	Erpici rotanti / *Rotary Harrows*	(2.03)	136
MV-819F	Erpici rotanti / *Rotary Harrows*	(2.03)	138
MV-824F	Erpici rotanti / *Rotary Harrows*	(2.03)	140
MV-826F	Erpici rotanti / *Rotary Harrows*	(2.03)	142
MZ-1A	Zappatrici - Fresatrici / *Rotary Tillers*	(2.01)	121
MZ-2A	Zappatrici - Fresatrici / *Rotary Tillers*	(2.01)	122
MZ-3A	Zappatrici - Fresatrici / *Rotary Tillers*	(2.01)	123
MZ-812F	Zappatrici - Fresatrici / *Rotary Tillers*	(2.01)	125
MZ-817F	Zappatrici - Fresatrici / *Rotary Tillers*	(2.01)	127
MZ-822F	Zappatrici - Fresatrici / *Rotary Tillers*	(2.01)	129
MZ-827F	Erpici rotanti / *Rotary Harrows*	(2.03)	130

Tipo *Type*	Applicazioni *Applications*		p.
N-2A	Spandiletame / *Manure Spreaders*	(1.04)	104
N-669J	Punte da mais / *Corn Headers*	(4.08)	235
N-673J	Carri miscelatori / *Feed Mixer Machines*	(4.06)	218
OS-784	Gruppi testate da grano e girasole / *Grain Header and Sunflower Headers*	(4.10)	240
OS-861	Gruppi testate da grano e girasole / *Grain Header and Sunflower Headers*	(4.10)	241
PGA-1202	Carri miscelatori / *Feed Mixer Machines*	(4.06)	219
PGA-1602	Carri miscelatori / *Feed Mixer Machines*	(4.06)	222
PGA-1602 double	Carri miscelatori / *Feed Mixer Machines*	(4.06)	223
PGA-1603	Carri miscelatori / *Feed Mixer Machines*	(4.06)	224
PGA-1603 hyd	Carri miscelatori / *Feed Mixer Machines*	(4.06)	225
PGA-2102	Carri miscelatori / *Feed Mixer Machines*	(4.06)	226
PGA-2103	Carri miscelatori / *Feed Mixer Machines*	(4.06)	226
PGA-2502	Carri miscelatori / *Feed Mixer Machines*	(4.06)	227
PGA-2503	Carri miscelatori / *Feed Mixer Machines*	(4.06)	228
PGA-3003	Carri miscelatori / *Feed Mixer Machines*	(4.06)	229
PGA-4203	Carri miscelatori / *Feed Mixer Machines*	(4.06)	230
PGA-502	Carri miscelatori / *Feed Mixer Machiness*	(4.06)	218
T-19	Gamma angolari applicazioni generiche / *Generic Application Angular Gearboxes*	(0.01)	16
T-19G	Seghe circolari e a nastro / *Circular Saws and Belt Saws*	(5.02)	252
T-22A	Gamma angolari applicazioni generiche / *Generic Application Angular Gearboxes*	(0.01)	38
T-22F	Trivelle / *Post Hole Diggers*	(2.04)	149
T-25J	Decespugliatrici / *Rotary Cutters*	(1.03)	97
T-269A	Gamma angolari applicazioni generiche / *Generic Application Angular Gearboxes*	(0.01)	40
T-269B	Gamma angolari applicazioni generiche / *Generic Application Angular Gearboxes*	(0.01)	41

Tipo *Type*	Applicazioni *Applications*		p.
T-269B	Trinciastocchi / *Flail Mowers*	(1.01)	80
T-278A	Gamma angolari applicazioni generiche / *Generic Application Angular Gearboxes*	(0.01)	24
T-278D	Falciatrici rotative / *Cutter Bars*	(4.01)	185
T-279A	Gamma angolari applicazioni generiche / *Generic Application Angular Gearboxes*	(0.01)	36
T-279D	Falciatrici rotative / Cutter Bars	(4.01)	188
T-279J	Gamma angolari applicazioni generiche / *Generic Application Angular Gearboxes*	(0.01)	36
T-27A	Gamma angolari applicazioni generiche / *Generic Application Angular Gearboxes*	(0.01)	18
T-27A	Seghe circolari e a nastro / *Circular Saws and Belt Saws*	(5.02)	253
T-290A	Gamma angolari applicazioni generiche / *Generic Application Angular Gearboxes*	(0.01)	32
T-290F	Trivelle / *Post Hole Diggers*	(2.04)	148
T-290HD	Gamma angolari applicazioni generiche / *Generic Application Angular Gearboxes*	(0.01)	34
T-292B	Gamma angolari applicazioni generiche / *Generic Application Angular Gearboxes*	(0.01)	35
T-292E	Presse raccoglitrici / *Balers*	(4.04)	207
T-301B	Gamma angolari applicazioni generiche / *Generic Application Angular Gearboxes*	(0.01)	42
T-301B	Trinciastocchi / *Flail Mowers*	(1.01)	81
T-304A	Gamma angolari applicazioni generiche / *Generic Application Angular Gearboxes*	(0.01)	22
T-304A	Falciatrici rotative / *Cutter Bars*	(4.01)	184
T-304A	Presse raccoglitrici / *Balers*	(4.04)	206
T-304A	Punte da mais / *Corn Headers*	(4.08)	236
T-304C	Trivelle / *Post Hole Diggers*	(2.04)	146
T-305J	Decespugliatrici / *Rotary Cutters*	(1.03)	98
T-310A	Gamma angolari applicazioni generiche / *Generic Application Angular Gearboxes*	(0.01)	20
T-310J	Gamma angolari applicazioni generiche / *Generic Application Angular Gearboxes*	(0.01)	20
T-311A	Gamma angolari applicazioni generiche / *Generic Application Angular Gearboxes*	(0.01)	26

Tipo *Type*	Applicazioni *Applications*		p.
T-311J	Gamma angolari applicazioni generiche / *Generic Application Angular Gearboxes*	(0.01)	26
T-312A	Gamma angolari applicazioni generiche / *Generic Application Angular Gearboxes*	(0.01)	28
T-312HD	Gamma angolari applicazioni generiche / *Generic Application Angular Gearboxes*	(0.01)	30
T-312HD	Falciatrici rotative / *Cutter Bars*	(4.01)	186
T-312J	Gamma angolari applicazioni generiche / *Generic Application Angular Gearboxes*	(0.01)	28
T-313J	Trinciastocchi / *Flail Mowers*	(1.01)	78
T-331A	Gamma angolari applicazioni generiche / *Generic Application Angular Gearboxes*	(0.01)	44
T-331A	Trinciastocchi / *Flail Mowers*	(1.01)	82
T-332A	Gamma angolari applicazioni generiche / *Generic Application Angular Gearboxes*	(0.01)	46
TB-19C	Spandiletame / *Manure Spreaders*	(1.04)	102
TB-19C	Zappatrici multiple / *Multiple Rotary Tillers*	(2.02)	115
TB-22C	Zappatrici multiple / *Multiple Rotary Tillers*	(2.02)	118
TB-278C	Zappatrici multiple / *Multiple Rotary Tillers*	(2.02)	117
TB-27C	Spandiletame / *Manure Spreaders*	(1.04)	103
TB-27C	Zappatrici multiple / *Multiple Rotary Tillers*	(2.02)	116
TB-27J	Zappatrici multiple / *Multiple Rotary Tillers*	(2.02)	116
TB-281J	Zappatrici multiple / *Multiple Rotary Tillers*	(2.02)	114
TB-318J	Spandifieno rotativi / *Rotary Tedders*	(4.05)	199
TB-319J	Spandifieno rotativi /*Rotary Tedders*	(4.05)	200
TB-320A	Spandifieno rotativi / *Rotary Tedders*	(4.05)	201
TB-323J	Spandifieno rotativi / *Rotary Tedders*	(4.05)	202
TF-26A	Decespugliatrici / *Rotary Cutters*	(1.03)	95
TF-285B	Decespugliatrici / *Rotary Cutters*	(1.03)	96
TL-281E	Trinciastocchi / *Flail Mowers*	(1.01)	69

Tipo *Type*	Applicazioni *Applications*		p.
TL-290A	Trinciastocchi / *Flail Mowers*	(1.01)	76
TL-292B	Trinciastocchi / *Flail Mowers*	(1.01)	79
TL-310A	Trinciastocchi / *Flail Mowers*	(1.01)	70
TL-310J	Trinciastocchi / *Flail Mowers*	(1.01)	70
TL-311A	Trinciastocchi / *Flail Mowers*	(1.01)	72
TL-311J	Trinciastocchi / *Flail Mowers*	(1.01)	72
TL-312A	Trinciastocchi / *Flail Mowers*	(1.01)	74
TLZ-21J	Zappatrici - Fresatrici / *Rotary Tillers*	(2.01)	119
TLZ-292A	Zappatrici - Fresatrici / *Rotary Tillers*	(2.01)	120
TV-274A	Erpici rotanti / *Rotary Harrows*	(2.03)	132
TV-301H	Erpici rotanti / *Rotary Harrows*	(2.03)	133
TV-312H	Falciatrici rotative / *Cutter Bars*	(4.01)	187
Y-890A	Giroandanatori / *Rotary Rakes*	(4.02)	198

5 mm

5 mm

5 mm



comer industries

Comer Industries SpA

42046 Reggiolo (RE) - Italy - Via Magellano, 27 - Tel. +39 0522 974111 - Fax +39 0522 973249
www.comerindustries.com - info@comerindustries.com

Updated information about our sales network and product ranges is available at: **www.comerindustries.com**
Comer Industries shall have no liability for the completeness and accuracy of the information and cannot be held liable for any third-party claims or losses of any damages. The information represented in this catalogue can be revised at any time without notice.