Service Manual

Wheel loaders

180 / 280



Models	**340-01 / 341-01 / 341-02**
From serial nos.	**340010001 / 341010001 / 341020001**
Edition	**2.1**
Order number	**1000104011 EN 06/07**

neuson

kramerALLRAD®

Documentation

Description		Order no.
Service manual		1000104011 En
Operator's manual		1000050821 En
Spare parts catalogue	Model 340-01	1000050818
	Model 341-01	1000050822
	Model 341-02	1000125056

Legend

Edition	Issued
1.0	01/03
1.1	01/04
2.0	01/05
2.1	06/07

Copyright – 2007 Kramer-Werke GmbH, Überlingen
Printed in Germany
All rights reserved

No part of this publication may be reproduced, translated or used in any form or by any means – graphic, electronic or mechanical including photocopying, recording, taping or information storage or retrieval systems – without prior permission in writing from the manufacturer.

The cover features the machine with possible optional equipment.

kramerALLRAD®

Kramer-Werke GmbH
Nussdorfer Str. 50
D-88662 Überlingen

Document: SERV-HB 340-01 En
Order no.: 1000104011
Edition: 2.1

Table of contents

Specifications

Important information on this service manual TD-1
Type labels and component numbers TD-2
Machine overview TD-4
Cab overview TD-5
Overview: Instrument panel, multifunctional lever and drive lever (340-01, 341-01) TD-7
Overview: Instrument panel, multifunctional lever and drive lever (341-02) TD-9
Machine specifications TD-10
Frame TD-10
Engine TD-10
Power train TD-11
Axles TD-11
Brakes TD-12
Steering system TD-12
Work hydraulics TD-12
Pilot control TD-12
Additional control circuit + 4th control circuit (option) TD-13
Electric system TD-13
Fuse box in control lever base TD-13
Main fuse box with relays (engine TNE 88) TD-14
Relays (engine TNE 88) TD-14
Main fuse box with relays (engine TNV 88) TD-15
Relays (engine TNV 88) TD-15
Tyres for model 340-01 ..... TD-16
Tyres for model 341-01 / 341-02 ..... TD-16
Weight indications for model 340-01 ..... TD-17
Weight indications for model 341-01 ..... TD-17
Weight indications for model 341-02 ..... TD-17
Noise levels TD-18
Vibration TD-18
Coolant compound table TD-18
General tightening torques TD-19
Specific tightening torques TD-19
Loader unit TD-20
Dimensions model 340-01 ..... TD-21
Dimensions model 341-01 ..... TD-22
Dimensions model 341-02 ..... TD-23

Maintenance

Fluids and lubricants 3-1
Explanation of symbols on the maintenance label 3-2
Maintenance label 3-3
Maintenance plan (overview) 3-4
Maintenance kits 3-7
Maintenance kit model 340-01 (180) up to serial no. 340010295 3-7
Maintenance kit model 340-01 (180) starting serial no. 340010296 3-7
Maintenance kit model 341-02 (280) up to serial no. 341020016 3-7
Maintenance kit model 341-02 (280) starting serial no. 341020017 3-7
Refuelling 3-8
Stationary fuel pumps 3-8
Fuel prefilter (water separator) 3-9
Cleaning the fuel filter 3-10
Bleeding the fuel system 3-11

Engine lubrication system ... 3-12
Checking the oil level ... 3-12
Changing engine oil ... 3-13
Changing the engine oil filter cartridge ... 3-14
Checking/filling up the coolant level ... 3-15
Air filter ... 3-16
Replacing the filter cartridge ... 3-17
V-belt ... 3-18
Checking V-belt tension ... 3-18
Retightening the V-belt ... 3-18
Hydraulic system ... 3-19
Specific safety instructions ... 3-19
Checking the hydraulic oil level ... 3-20
Filling up the hydraulic oil ... 3-20
Replacing hydraulic oil ... 3-21
Use of biodegradable oil ... 3-22
Important information ... 3-22
Replacing the hydraulic oil reflux filter ... 3-23
Replacing the filler and breather filter ... 3-23
Checking hydraulic pressure lines ... 3-24
Specific safety instructions ... 3-24
Gearboxes and axles ... 3-25
Rear axle transfer gearbox ... 3-25
Checking the oil level ... 3-25
Filling up oil ... 3-25
Changing the oil ... 3-26
Front and rear axle differentials ... 3-27
Lubricating the rear axle oscillation-type bearing ... 3-28
Front and rear axle planetary drives ... 3-28
Lubricating the loader unit ... 3-29
Lubricate the following lubrication points on the loader unit: ... 3-29
Tyre care ... 3-31
Tyre check ... 3-31
Daily checks ... 3-31
Weekly checks ... 3-31
Wheel change ... 3-32
Removing the wheels ... 3-32
Fitting the wheels ... 3-32
Electric system ... 3-33
Specific safety instructions ... 3-33
Service and maintenance work at regular intervals ... 3-33
Before driving the machine ... 3-33
Every week ... 3-33
Cables, bulbs and fuses ... 3-34
Alternator ... 3-34
Battery ... 3-35
General maintenance work ... 3-36
Specific safety instructions ... 3-36
When using washing solvents ... 3-36
When using compressed air ... 3-36
When using a high-pressure cleaner or steam jet ... 3-36
When using volatile and easily flammable anticorrosion agents and sprays: ... 3-36
Inside the cab ... 3-37
Exterior of the machine ... 3-37
Cleaning the engine compartment ... 3-38
Screw connections ... 3-38
Pivots and hinges ... 3-38

Engine

Specifications 4-1
Description of engine type label 4-2
Engine overview (forwards driving direction) 4-3
Engine overview (reverse driving direction) 4-4
Fuel injection system 4-5
Fuel injection nozzle 4-6
Engine valve tip clearance 4-7
Engine cooling: overview 4-8
Fuel system: overview 4-9
Heating circuit: engine – cab 4-10
Engine trouble 4-11

Power train

Variable displacement pump A 10 VG 28 DA: description 5-1
Hydraulic motor VM 45 EZ 6: description 5-2
Variable displacement pump: overview 5-3
Variable displacement pump: measuring points 5-4
Hydraulic motor for model 340-01 (180): overview 5-5
Hydraulic motor for model 341-01/341-02: overview 5-6
340-01 (180) drive: diagram 5-7
341-01/341-02 drive: diagram 5-8
340-01 (180) drive: hydraulic oil circuit 5-9
Check and adjustment instructions 5-10
Towing 5-10
Test report model 340-01 (180) 5-11
Test report model 341-01/341-02 (280) 5-12
Adjusting boost pressure 5-13
Adjusting pilot pressure 5-14
Adjusting starting revs 5-15
Adjusting the hydraulic resistance curve on the transposition screw 5-16
Readjusting the hydraulic resistance curve 5-17
Checking engine droop 5-18
Adjusting high pressure/pressure cutoff 5-19
Pressure cutoff: exploded view 5-20
Adjusting control piston pressure of hydraulic motor 341-01 / 02 (280) 5-21

Axles

Axle type label 6-1
Drain, fill and check plug model 340-01 6-2
Tightening values (Nm) model 340-01 6-3
Screw connections model 340-01 6-4
Sealing work 6-5
Input flange – front axle models 340-01/341-01/341-02 6-5
Sealing work: double cardan shaft – planetary carrier model 340-01 6-6
Sealing work: planetary carrier model 340-01 6-7
Sealing work: planetary drive model 340-01 6-11
Sealing work: axle carrier 6-13
Sealing work: axle carrier – differential housing models 340-01/341-01/341-02 6-15
Sealing work: gearbox – input flange models 340-01/341-01/341-02 6-16
Overview: Self-locking differential models 340-01 / 341-01 / 341-02 6-17
Oil change and check model 341-01 / 341-02 6-18
Tightening values model 341-01/341-02 6-19
Screw connections model 341-01/341-02 6-20
Overview: Planetary drive model 341-01/341-02 6-21
Input shaft – differential model 341-01/341-02: overview 6-22

Sealing work: planetary drive and wheel hub model 341-01/341-02 6-23
Removing the wheel hub assembly 6-24
Assembling the wheel hub assembly 6-26
Sealing work: planetary carriery, axle tube model 341-01/341-02 6-28
Removing the planetary carrier 6-28
Assembly work: planetary carrier – axle tube 6-29
Front axle carrier model 341-01/341-02: overview 6-31
Front axle steering ram model 341-01/341-02: overview 6-32
Overview: Front axle wheel hub model 341-01 / 341-02 6-33
Overview: Front axle differential model 341-01 / 341-02 6-34
Overview: Rear axle carrier model 341-01/341-02 6-35
Overview: Rear axle steering ram model 341-01 / 341-02 6-36
Overview: Rear axle wheel hub model 341-01 / 341-02 6-37
Overview: Rear axle differential model 341-01 / 341-02 6-38
Overview: 20 kph gearbox model 341-01 / 341-02 6-39
Sealing the gearbox 6-40

Brakes

Brake system overview 7-1
Handbrake: readjustment 7-2
Replacing brake pads 7-3
Cable pulls: basic setting 7-4
Cable pull for inching 7-4
Cable pull – handbrake 7-5
Cable pull – handbrake 7-6

Steering system

Steering circuit overview 8-1
Steering diagram 340-01 (180) 8-2
Steering diagram 341-01/341-02 8-3
Hydraulic circuit (steered to the left) model 340-01 (180) 8-4
Hydraulic circuit (steered to the right) model 340-01 (180) 8-5
Hydraulic ports on servostat 8-6
Pressure relief valve – servostat: settings 8-6
Sealing steering rams 8-7
Steering system adjustment 8-8
Function 8-8
Checking a steering ram 8-8
Overview of steering ram setting 8-8
Necessary tools 8-8
How to check/set the steering rams 8-9
Checking the track setting (1) 8-10
Correcting the track setting (2) 8-10
Setting the steering limit (3) 8-11
Checking steering synchronisation (4) 8-12
Checking the bypass 8-12
Bleeding the steering rams 8-13
Setting steering synchronisation (5) 8-14
Final check/test run 8-14

Hydraulics

Hydraulics diagram with pilot control 9-1
Hydraulics diagram – float position 9-2
Hydraulic circuit: pump – control valve – tank 9-3
Control valve: overview 9-4
Hydraulic ports on control valve 9-5
Hydraulic circuit pilot control 9-6
Sealing the lift ram 9-7
Sealing the tilt ram 9-8
Sealing the quickhitch ram 9-9
Sealing work: quickhitch ram piston rod 9-10
Assembly tools 9-10
Loader unit: overview 9-11
Hydraulic circuit 4th control circuit 9-12
Hydraulic diagram: 4th control circuit – solenoid valve without contact (neutral circulation) 9-13
4th control circuit – solenoid valve with contact: hydraulic diagram 9-14
3rd + 4th control circuit – solenoid valve with contact: hydraulic diagram 9-15
Test and setting instructions for work hydraulics 9-16
Test report model 340-01 (180) 9-16
Test report model 341-01 / 341-02 (280) 9-17
Legend for hydraulics diagram model 340-01 (180) 9-18
Hydraulics diagram model 340-01 9-20
Hydraulics diagram for model 341-01/02 (280) 9-21
Hydraulics diagram (option) for model 341-01 (280) 9-22
Hydraulics diagram (option) for model 341-02 (280) 9-23

Electric system

Ohm's Law (current, voltage, resistance); power 10-1
Multifunction measuring device 10-1
Terminal description 10-2
Cable colour coding 10-5
Extract from DIN 72551, sheet 4 10-5
Abbreviation – colour coding 10-6
Relays 10-7
Use, mode of function 10-7
Terminal description on relay 10-7
Alternator, starter, battery 10-7
Main fuse box with relays (engine TNE 88) 10-7
Relays (engine TNE 88) 10-8
Main fuse box with relays (engine TNV 88) 10-9
Relays (engine TNV 88) 10-9
Fuse box in control lever base 10-10
Board: overview 10-11
Plug and socket connection: wiring harness 0113300210 frame – cab 10-12
Plug and socket connection: wiring harness 0113300110 – instrument panel 10-13
Plug and socket connection: wiring harness 0000809831 – working light/rotating beacon 10-14
Retrofitting a rotating beacon 10-15
Retrofitting a working light (at rear of cab) 10-15
Retrofitting a working light (at front of cab) 10-15
Wiring diagrams, wiring harnesses 10-16
Cable colours: steering-column control lever S2 and S3 to plugs 10.1, 10.2 and X9 10-16
Legend: Wiring harness 1000110533 (engine – frame TNV 88) 10-17
Wiring harness 1000110533 model 340-01 (engine – frame TNV 88) 10-18
Legend: Wiring harness 1000110534 model 341-01/341-02

(engine – frame TNV 88) 10-19
Wiring harness 1000110534 model 341-01/341-02
(engine – frame TNV 88) 10-20
Legend: Wiring harness 0113300310 for model 341-01
(engine – frame TNE 88) 10-21
Wiring harness 0113300310 for model 341-01 (engine – frame TNE 88) 10-22
Legend: Wiring harness 1000127392 (cab 341-02) 10-23
Wiring harness 1000127392 cab 341-02 10-24
Wiring harness 0113300010 engine – frame model 340-01
(engine TNE 80) 10-25
Cab wiring harness 0113300110 cab 340-01 10-26
Wiring diagram 011010090 (340-01/341-01) (engine TNE 88) 10-27
Wiring diagram 011010090 (340-01/341-01) (engine TNE 88) 10-28
Legend: Wiring diagram 1000110532 model 340-01/341-01
(180/280) (engine TNV 88) 10-29
Wiring diagram 1000110532 model 340-01/341-01 (180/280)
(engine TNV 88) 10-30
Legend: Wiring diagram 1000128026 model 341-02 (280) (engine TNV 88) 10-31
Wiring diagram 1000128026 model 341-02 (280) (engine TNV 88) 10-32
Roof wiring harness 10-33
Cable routing from steering-column control lever S3 on left, starting plug X9 10-34
Cable routing from steering-column control lever S2 on right, starting plug 10.1 . 10-35
Cable routing from steering-column control lever S2 on right, starting plug 10.2 10-36

Specifications

TD Specifications

TD.1 Important information on this service manual

This service manual contains important information on how to service your machine safely, correctly and economically. Therefore, it aims not only at new staff, but it also serves as a reference for experienced users. It helps to avoid dangerous situations and reduce repair costs and downtimes. Furthermore, the reliability and the service life of the machine will be increased by following the instructions in the operation manual.

Careful and prudent working is the best way to avoid accidents!

Operational safety and readiness of the machine do not only depend on your skill, but also on maintenance and servicing of the machine.

Insist on using original spare parts when carrying out maintenance and repair work. This ensures operational safety and readiness of your machine, and maintains its value.

Your KramerAllrad dealer will be pleased to answer any further questions regarding the machine or the service manual.

Abbreviations/symbols

- This symbol stands for a list
  - Subdivision within lists or an activity. Follow the steps in the recommended sequence

☞ *This symbol requires you to carry out the activity described*

➥ Description of the effects or results of an activity

n. s. = not shown

“Option” = optional equipment

Stated whenever controls or other components of the machine are installed as an option.

 This symbol shows the driving direction – for better orientation in figures and graphics.

TD.2 Type labels and component numbers

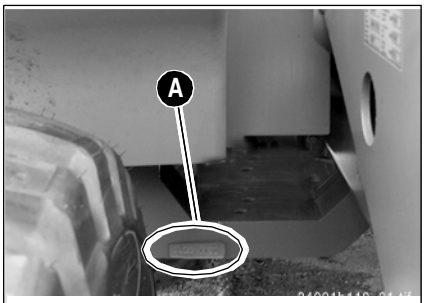

Fig. 1: Type label: location

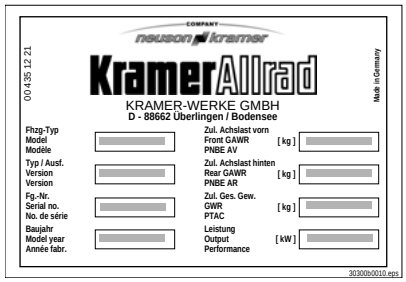

Fig. 2: Type label

Serial number

The serial number is stamped on the machine frame (fig. 1/**A**). It is also located on the type label (fig. 2).

The type label is located at the front right of the machine frame (on one side of the loader unit bulkhead).

Type label information

Example: model 340-01 (180)

Machine model:	340
Version:	340-01
Serial no.:	340 01 0090
Model year:	2003
Front gross axle weight rating:	1600 kg
Rear gross axle weight rating:	1600 kg
Gross weight rating:	2300 kg
Output:	23.5 kW

Other information – see *Machine specifications* on page TD-10

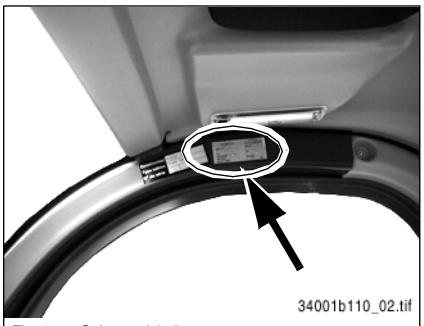

Fig. 3: Cab type label

Cab number

The type label (arrow) is located in the cab, on the top right frame member.

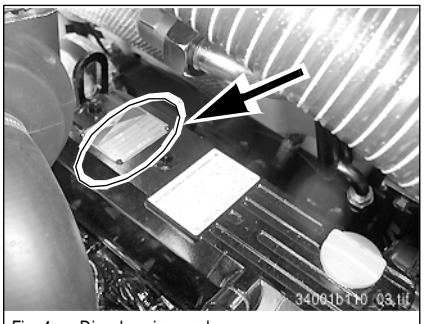

Fig. 4: Diesel engine number

Engine number

The type label (arrow) is located on the cylinder-head cover (engine).

Example: Yanmar 46557

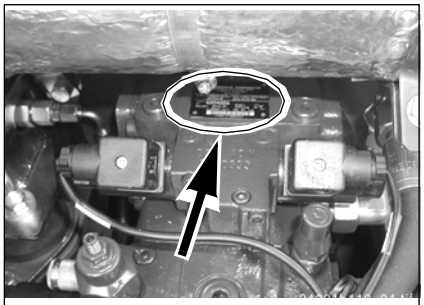

Fig. 5: Hydraulic pump type label

Hydraulic pump number

The type label (arrow) is located on the hydraulic pump housing (next to where the pump is installed on the diesel engine)

Example: 6204226

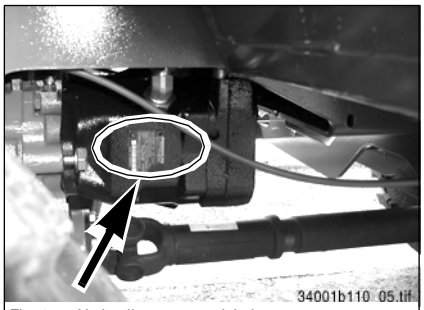

Fig. 6: Hydraulic motor type label

Hydraulic motor number

The type label (arrow) is located above the cardan shaft, on the right of the hydraulic motor.

Example: 7657648

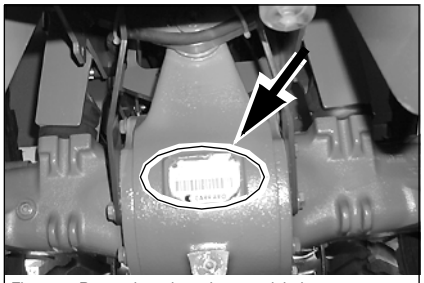

Fig. 7: Rear axle and gearbox type label

Rear axle number

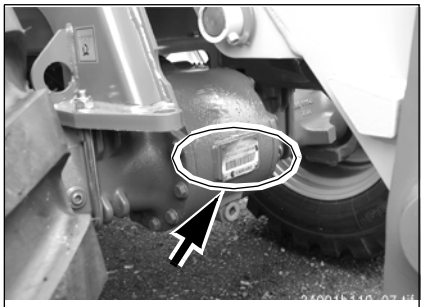

Fig. 8: Front axle type label

Front axle number

The type label (arrow) is located on the differential housing, at the front.

TD.3 Machine overview

1 Eye hook for loading/strapping down the machine[1]
2 Rearview mirror
3 Handle
4 Headlights
5 Danger label
6 Turn indicator
7 Foothold
8 Door handle and lock
9 Speed label
10 Door arrester

1. The eye hooks on model 341-01 are used for removing the cab only and may **not** be used for crane-lifting the machine

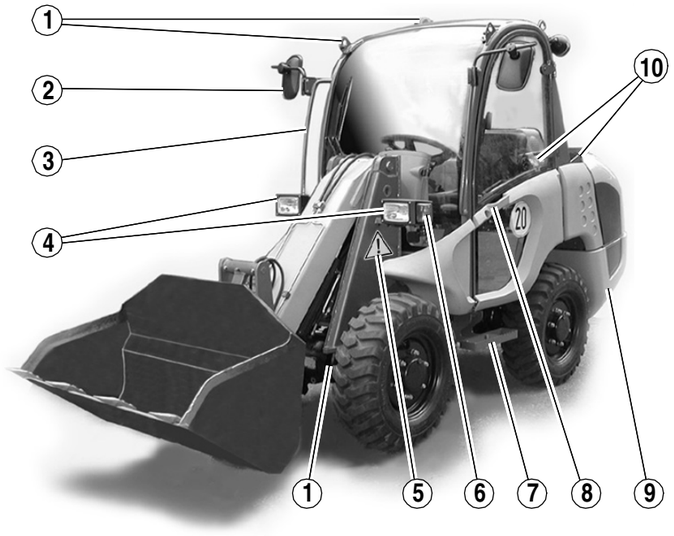

11 Reflectors
12 Turn indicator/brake/rear light
13 Socket for oil preheater (option)
14 Towing device/eye hook for loading/strapping down the machine
15 Maintenance flap (model 340-01)
16 Hydraulic ports (option)
17 Engine cover lock
18 Label (Do not open engine cover)
19 Working light
20 Rotating beacon (option)

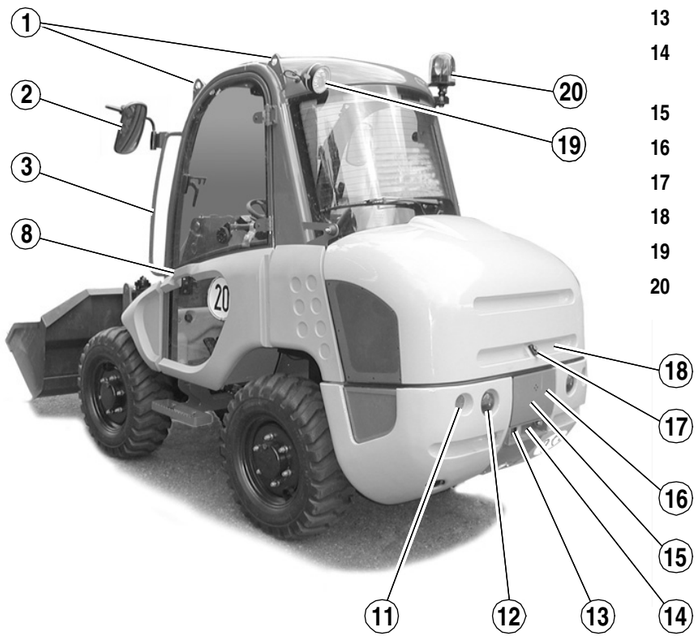

Fig. 9: Machine outside views

Cab overview: see overleaf

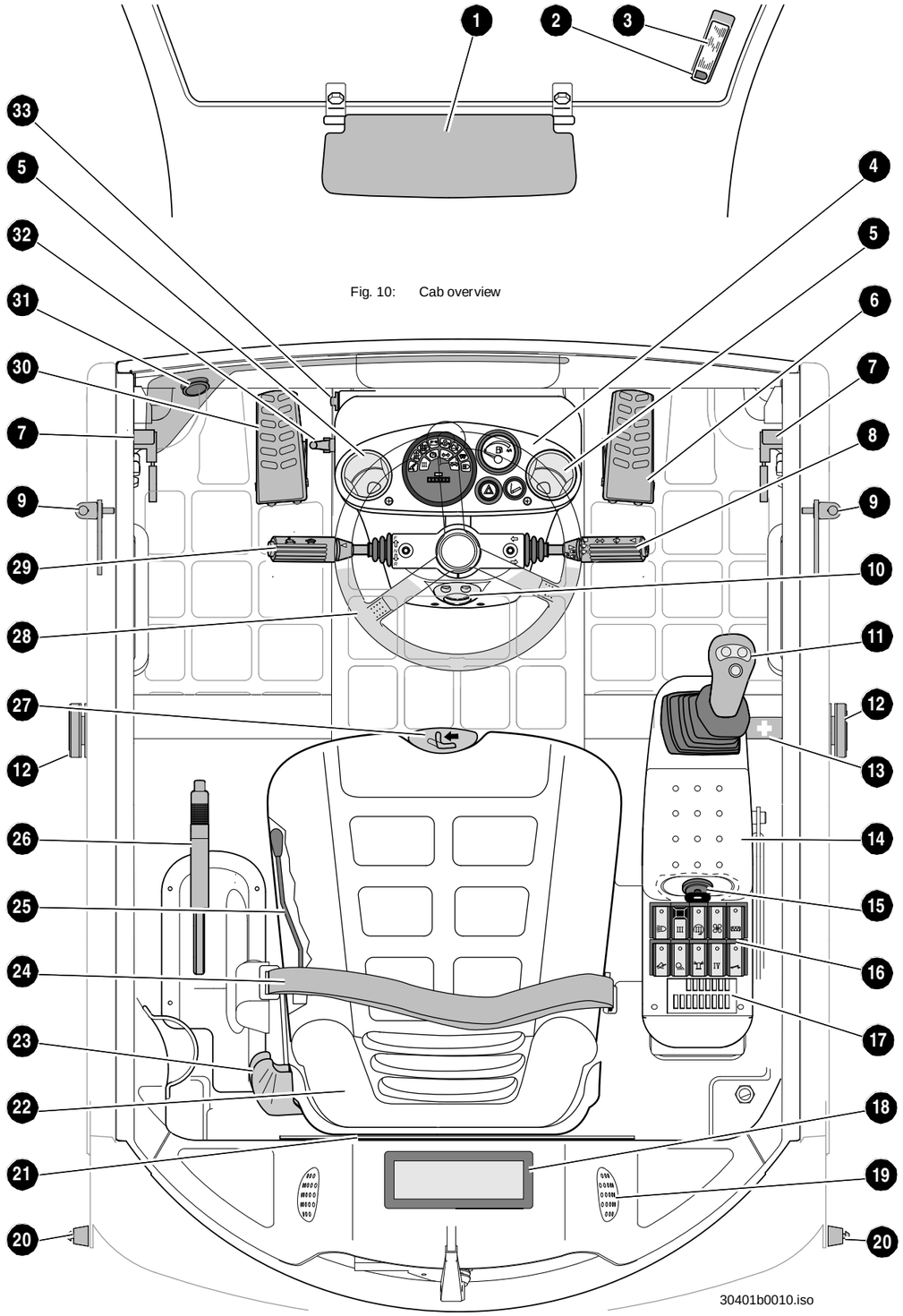

Fig. 10: Cab overview

TD.4 Cab overview

Pos.	Description For more information see page
	Roof console
1	Sun visor
2	Switch – interior lighting
3	Interior light
	Cab
4	Instrument panel
5	Air vent – front window
6	Accelerator pedal
7	Door locks
8	Multifunctional lever
9	Opener – side window
10	Air vent – leg room
11	Control lever – loader unit
12	Arrester – side window
13	Fixture – first-aid kit
14	Control lever base
15	Preheating start switch
16	Switch panel
17	Fuse box
18	Storage compartment/prepared radio installation (option)
19	Prepared installation for loudspeakers (option)
20	Arrester – side window lock
21	Storage pocket for operation manual
22	Seat
23	Lever – weight adjustment
24	Seat belt
25	Lever – horizontal seat adjustment
26	Handbrake lever
27	Backrest adjustment lever
28	Hydrostatic steering
29	Drive lever
30	Service brake pedal (hydrostatic)/inching
31	Tank – washer system
32	Lock for control lever **11** (driving on public roads)
33	Rotary switch – heating

Instrument panel overview: see overleaf (340-01/341-01)

Instrument panel overview: see overleaf (340-01/341-01)

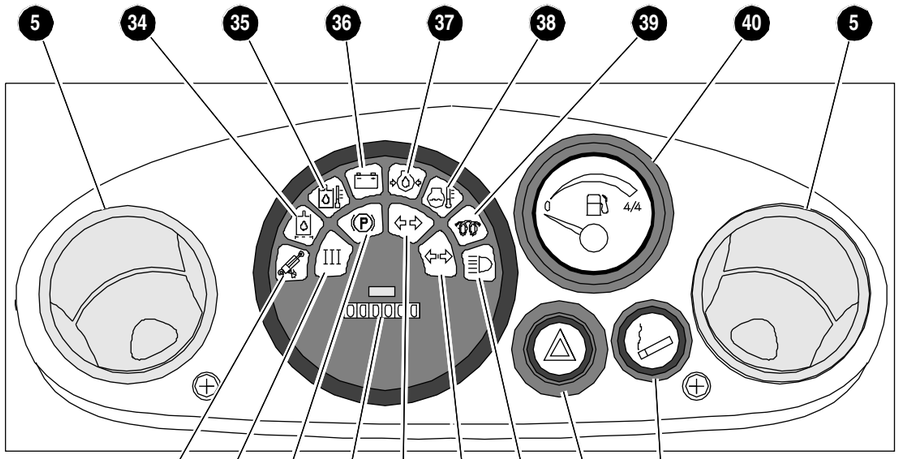

Fig. 11: Instrument panel overview

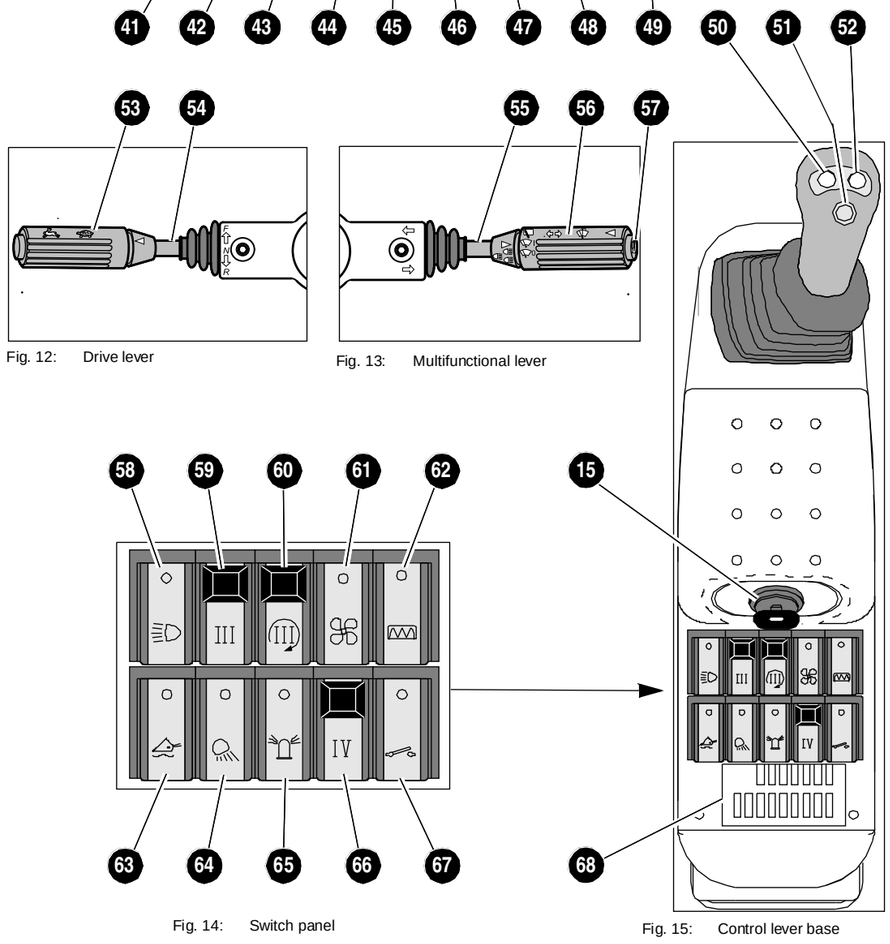

Fig. 12: Drive lever

Fig. 13: Multifunctional lever

Fig. 14: Switch panel

Fig. 15: Control lever base

TD.5 Overview: Instrument panel, multifunctional lever and drive lever (340-01, 341-01)

Pos.	Description
	Instrument panel
34	Telltale (red) – hydraulic oil filter
35	Telltale (red) – hydraulic oil temperature
36	Telltale (red) – alternator charge function
37	Telltale (red) – engine oil pressure
38	Telltale (red) – coolant temperature
39	Telltale (yellow) – cold starter
40	Fuel level indicator
41	Telltale (yellow) – load stabiliser (option) not assigned for model 340-01
42	Telltale (red) – 3rd control circuit continuous operation
43	Telltale (red) – handbrake
44	Hour meter
45	Telltale (green) – right/left turn indicator
46	Telltale (green) – right/left turn indicator on rear attachment
47	Telltale (blue) – high beam
48	Hazard warning switch
49	Socket/cigarette lighter
50	Tip switch – **unlock** 3rd control circuit (electric operation)
51	Not assigned
52	Tip switch – **lock** 3rd control circuit (electric operation)
	Drive lever
53	Rotary switch – speed range selection
54	Lever – selection of driving direction
	Multifunctional lever
55	Lever – turn indicators, high beam, headlight flasher
56	Rotary switch and tip switch – front/rear wipers, washer pump
57	Horn tip switch
	Switch panel
58	Lights switch
59	Switch with lock – 3rd control circuit
60	Switch – 3rd control circuit (continuous operation)
61	Heater fan switch
62	Tip switch – rear window heating
63	Switch – load stabiliser (option) not assigned for model 340-01
64	Switch – working light (option)
65	Switch – rotating beacon (option)
66	Switch – 4th control circuit (option)
67	Switch – front socket for electrically operated attachments (option)
68	Label – fuse box assignment

Instrument panel overview: see overleaf (341-02)

Instrument panel overview: see overleaf (341-02)

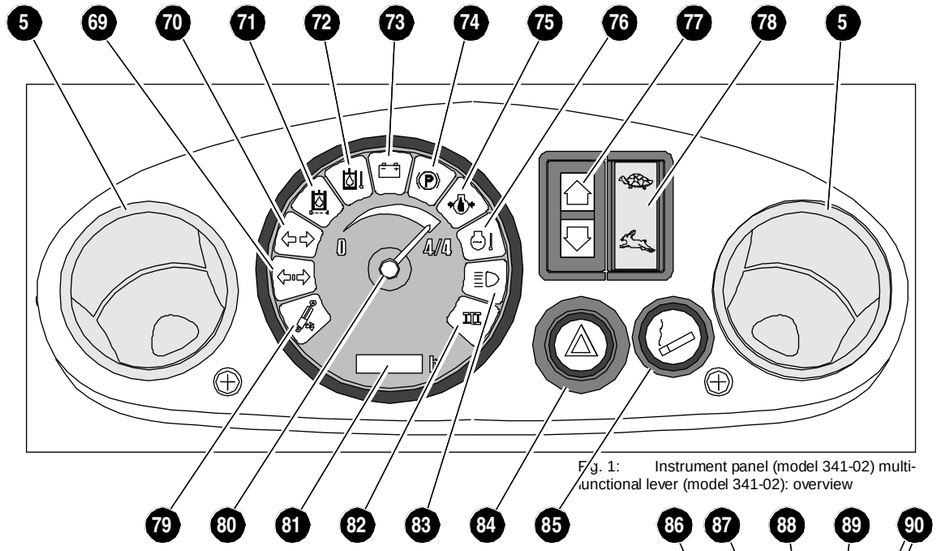

Fig. 1: Instrument panel (model 341-02) multi-functional lever (model 341-02): overview

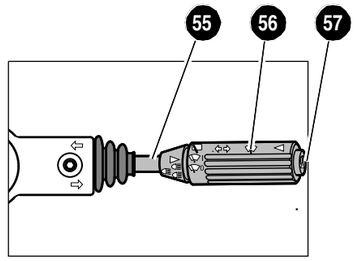

Fig. 2: Switch panel (model 341-02)

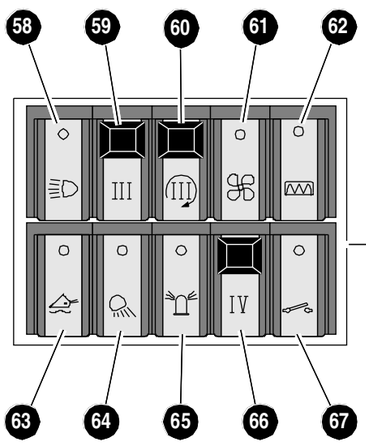

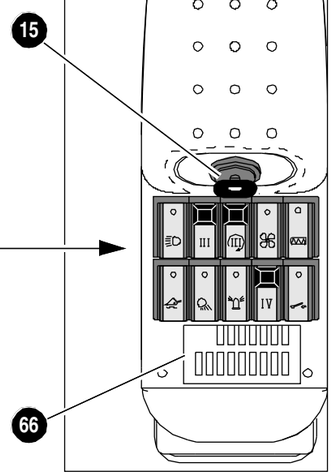

Fig. 3: Switch panel (model 341-02)

TD.6 Overview: Instrument panel, multifunctional lever and drive lever (341-02)

Pos.	Description
	Instrument panel (option)
69	Telltale (green) – right/left turn indicator on rear attachment
70	Telltale (green) – right/left turn indicator
71	Telltale (red) – hydraulic oil filter
72	Telltale (red) – hydraulic oil temperature
73	Telltale (red) – alternator charge function
74	Telltale (red) – handbrake
75	Telltale (red) – engine oil pressure
76	Telltale (yellow) – coolant temperature
77	Telltale (green) – driving direction (forwards/reverse)
78	Switch – speed range selection (high/low)
79	Telltale (yellow) – hose burst valve (option)
80	Fuel level indicator
81	Hour meter
82	Telltale (yellow) – 3rd control circuit continuous operation
83	Telltale (blue) – high beam
84	Hazard warning switch
85	Socket/cigarette lighter
	Control lever (option)
86	Tip switch – neutral speed range
87	Toggle switch – drive direction selection (forwards/reverse)
88	Tip switch – unlock 3rd control circuit (electric operation)
89	Tip switch – lock 3rd control circuit (electric operation)
90	Not assigned

TD.7 Machine specifications

TD.7.1 Frame

Sturdy steel sheet frame, rubber-mounted engine

TD.7.2 Engine

Engine	Model 340-01	Model 341-01 / 341-02
Product	Yanmar diesel engine	
Type	3TNE 88	4TNE 88
Design	Water-cooled 4 stroke diesel engine	
No. of cylinders	3	4
Displacement	1642 cm³	2190 cm³
Nominal bore and stroke	88 x 90 mm	88 x 90 mm
Output	23.5 kW at 2600 rpm	28.8 kW at 2400 rpm
Max. torque	99 –107 Nm at 1400 rpm	132 –143 Nm at 1600 rpm
Max. engine speed without load	2810 +/- 50 rpm	2590 +/- 50 rpm
Idling speed	1050 +/- 25 rpm	1050 +/- 25 rpm
Specific fuel consumption	245 g/kW	238 g/kW
Fuel injection system	Direct injection	Direct injection
Firing order	1 – 3 – 2	1 – 3 – 4 – 2
Starting aid	Glow plug (preheating time 10 – 15 seconds)	
Max. inclined position (engine no longer supplied with oil):	25° in all directions Observe tilting limit (20° lateral) of the machine!	
Exhaust values according to	97/68 EC	

TD.7.3 Power train

Variable displacement pump	**Model 340-01**	**Model 341-01 / 341-02**
Design	Infinitely adjustable axial pistons	
Displacement	0 – 28 cm³/rev	
Max. service pressure	350 bar	
Starting revs	1250 $^{+100}$ rpm	
Droop	2450 $^{+100}$ rpm	2250 $^{+100}$ rpm
Boost pump (integrated in variable displacement pump)		
Design	Gear	
Displacement	6.1 cm³/rev	8.4 cm³/rev
Charging/boost pressure	30 bar	
Driving direction	Electrohydraulic control (F – R on drive lever)	
Inching	Mechanical via brake/inching pedal	
Hydraulic motor		
Design	Axial piston motor	
Max. capacity	45 cm³/rev	55 cm³/rev
Drive speed	0 – 20 kph, forwards and reverse driving	
Pushing power	12.5 kN	24.0 kN
Transfer gearbox		
Design	Single-stage	
Transmission ratio	1.8529	

TD.7.4 Axles

Front axle (with 45 % self-locking differential)	**Model 340-01**	**Model 341-01/341-02**
Design	Rigid steering and drive axle	
King-pin inclination	7°	
Camber	1.5°	
Steering angle	38°	
Toe-in	0 mm	
Track width	886[1]/902 mm	1193 mm[1]
Rear axle (with 45 % self-locking differential)		
Design	Steering and drive axle, oscillating	
King-pin inclination	7°	
Oscillation	+/- 5°	+/- 7°
Camber	-1.5°	
Steering angle	38°	
Toe-in	0 mm	
Track width	886[1]/902 mm	1193 mm

1. Model 340-01 with tyres 28 x 9.00
   Model 341-01 with tyres 12.0-18

TD.7.5 Brakes

Service brake	
Design	Hydrostatic
Location	Drive (rear axle transfer gearbox)
Effect	Foot-operated hydrostatic brake system, braking effect on all wheels via cardan shaft
Handbrake	
Design	Manual, mechanical disc brake
Location	Front axle gearbox input
Effect	On both axles via cardan shaft

TD.7.6 Steering system

Steering system	Model 340-01	Model 341-01/341-02
Design	Hydrostatic 4 wheel steering with emergency steering features	
Steering mode	4 wheel steering	
Assemblies	Hydraulic pump, priority valve, servostat with safety valves, steering rams, self-synchronising in final position	
Max. pressure of hydraulic lines	175 bar	
Gear pump	Displacement 8 cm^3/rev	Displacement 22.5 cm^3/rev
Steering angle	2 x 38°	

TD.7.7 Work hydraulics

Work hydraulics	Model 340-01	Model 341-01/341-02
Hydraulic pump displacement:	8 cm^3/rev 20 l/min at 2600 rpm	22.5 cm^3/rev 52 l/min at 2400 rpm
Control valve	3 sections	
Max. service pressure	$240^{\pm 5}$ bar	
Secondary protection tilt ram	Rod side 280 bar Base side 120 bar	
Secondary protection lift ram	Rod side: resuction Base side: 370 bar	Rod side: resuction Base side: 300 bar
Filter	Reflux suction filter (0.5 bar initial stress)	
Hydraulic oil tank	40 l	65 l

TD.7.8 Pilot control

Pilot control pump = boost pump of hydraulic pump	Model 340-01	Model 341-01/341-02
Displacement	6.1 cm^3/rev	8.4 cm^3/rev
Charging/boost pressure	30 bar at 2400 rpm	
Pilot control unit		
Joystick	Four-way lever – control of lift and tilt rams Electric control of lock ram or attachments via tip switches	
Ball-type stop cock:	Lock against unintentional operation (for long-haul travel and transport)	

TD.7.9 Additional control circuit + 4th control circuit (option)

Additional control circuit + 4th control circuit	Model 340-01	Model 341-01/341-02
Hydraulic pump displacement:	16 cm³/rev ½ 40 l/min at 2600 rpm	32 cm³/rev ½ 75 l/min at 2400 rpm
Max. service pressure	240 bar	
Front hydraulic connections Pressure line: Unpressurised reflux:	 1 x nw 12 (red) 1 x nw 15 (blue)	 1 x nw 16 (red) 1 x nw 20 (blue)
Rear hydraulic connections Pressure line: Unpressurised reflux:	 1 x nw 10 (red) 1 x nw 10 (red)	 1 x nw 12 (red) 1 x nw 16 (blue)

TD.7.10 Electric system

Electric system	
Alternator	12 V 55 A
Starter	12 V 1.2 kW (model 340-01) 12 V 1.4 kW (model 341-01/341-02)
Battery	12 V 72 Ah
Socket	E.g. for cigarette lighter; 15 A max.

TD.7.11 Fuse box in control lever base

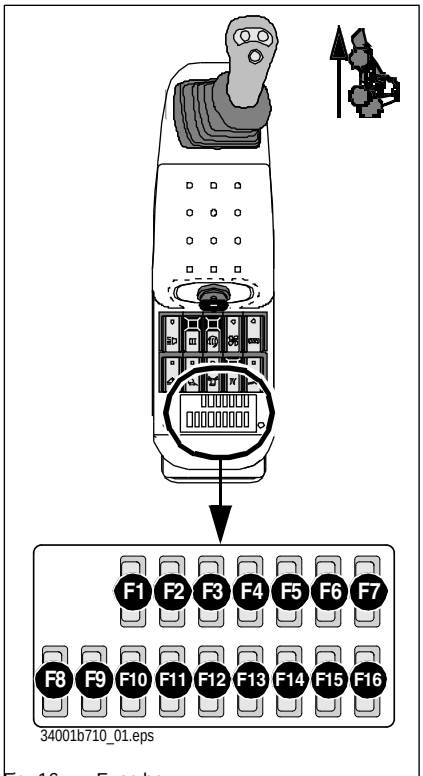

Fig. 16: Fuse box

Fuse no.	Rated current (A)	Protected circuit
F1	7.5 A	– High beam (left)
F2	7.5 A	– High beam (right)
F3	5 A	– Parking light (left)
F4	5 A	– Parking light (right)
F5	10 A	– Start
F6	25 A	– Additional lights
F7	25 A	– Lights
F8	7.5 A	– Low beam (left)
F9	7.5 A	– Low beam (right)
F10	5 A	– Relays, telltales, cutoff solenoid
F11	15 A	– Wiper
F12	15 A	– Valves
F13	7.5 A	– Driving
F14	30 A	– Fan, rear window heating
F15	7.5 A	– Turn indicator
F16	5 A	– Radio

TD.7.12 Main fuse box with relays (engine TNE 88)

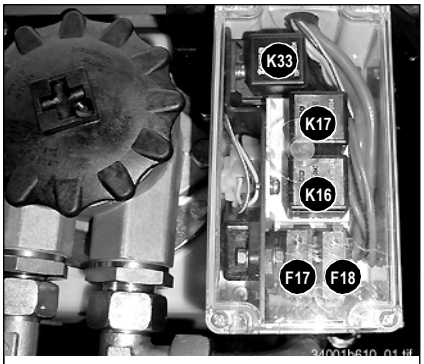

Fig. 17: Main fuse box in the engine compartment

Fuse no.	Rated current (A)	Protected circuit
F17	80 A	– Main fuse
F18	40 A	– Preheating/start fuse (starter)

Relay no.	Protected circuit
K 16	Preheating
K 17	Start
K 33	Cutoff solenoid

TD.7.13 Relays (engine TNE 88)

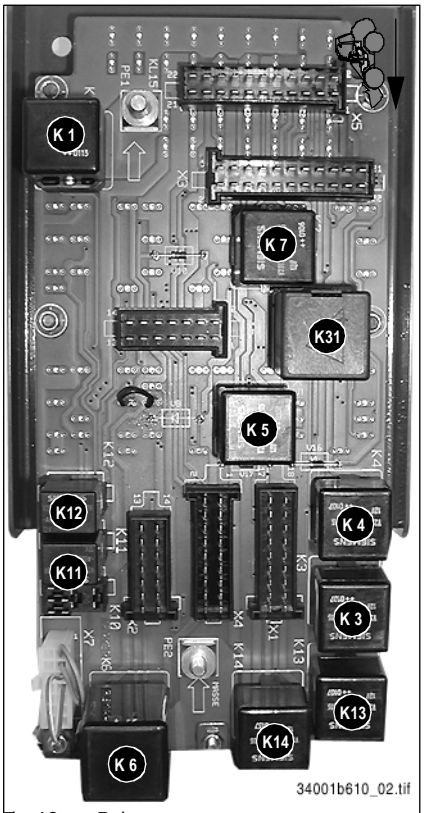

Fig. 18: Relays

The relays are installed in the control lever base under the switch panel (as seen from below the fuse board)

Switching relay no.	Rated current (A)	Protected circuit	Order no.
K 1	70	High current relay – terminal 15	1000154041
K 3	40/60	Solenoid valve – reverse driving	1000154043
K 4	40/60	Solenoid valve – forwards driving	1000154043
K 5	40/60	Front attachments	1000154043
K 6		Turn indicator relay	1000147918
K 7	40/60	Wipers	1000154043
K 11	20/35	Changeover (3rd control circuit)	1000125244
K 12	20/35	Changeover (3rd control circuit)	1000125244
K 13	20/35	Unlock (quickhitch facility)	1000125244
K 14	40/60	Lock (quickhitch facility)	1000154043
K 31		Time-lag relay $^{5\ min}$ (rear window heating)	1000027071

TD.7.14 Main fuse box with relays (engine TNV 88)

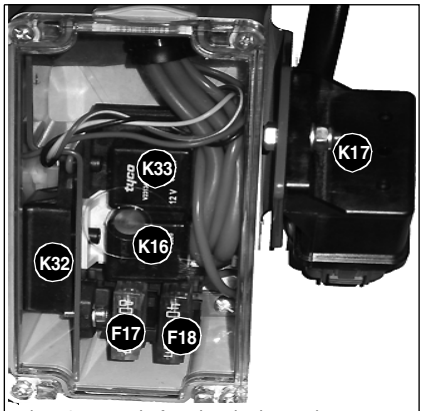

Fig. 19: Main fuse box in the engine compartment

Fuse no.	Rated current (A)	Protected circuit
F17	70 A	Main fuse
F18	40 A	Preheating/start fuse (starter)

Relay no.	Protected circuit
K 16	High current relay preheating
K 17	Start high current relay
K 32	Time lag relay for cutoff solenoid
K 33	High current relay cutoff solenoid

TD.7.15 Relays (engine TNV 88)

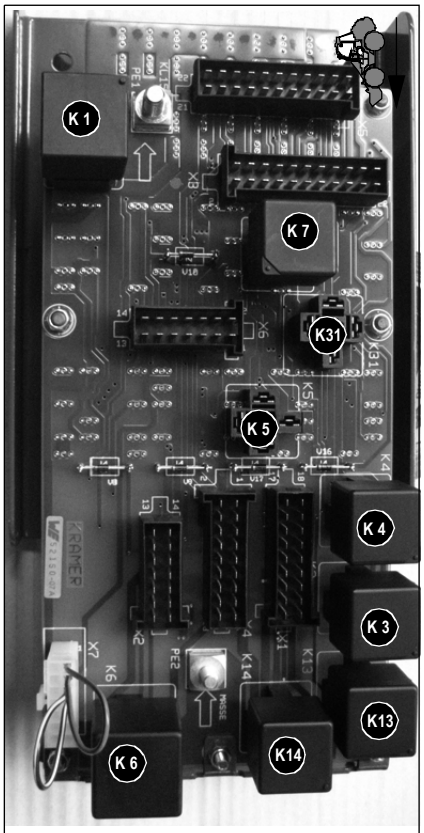

Fig. 20: Relays

The relays are installed in the control lever base under the switch panel (as seen from below the fuse board)

Switching relay no.	Rated current (A)	Protected circuit	Order no.
K 1	70	High current relay – terminal 15	1000154041
K 3	40/60	Solenoid valve – reverse driving	1000154043
K 4	40/60	Solenoid valve – forwards driving	1000154043
K 5	40/60	Front attachments	1000154043
K 6		Turn indicator relay	1000147918
K 7	40/60	Wipers	1000154043
K 13	20/35	Unlock (quickhitch facility)	1000125244
K 14	40/60	Lock (quickhitch facility)	1000154043
K 31		Time-lag relay $^{5\ min}$ (rear window heating)	1000027071

TD.7.16 Tyres for model 340-01

Tyre size	Tyre pressure		Wheel rims	
	Front	Rear	Wheel rim	Wheel offset
28 x 9.00/6PR[1]	2.0[2]	2.0	7 x 15	58 mm
10-16.5/6 PR	1.5[2]	1.5	8.25x16.5	50 mm
315/55 R16 120K MPT 81[3]	2.0[2]	2.0	10LBx16	30 mm

1. 28 x 9.00-15AC30 **4PR** tyres are permitted if fitted ex works
2. Increase front tyre pressure by 0.5 bar during pallet forks operation!
3. Legal regulations of your country may require separate certification

TD.7.17 Tyres for model 341-01 / 341-02

Tyre size	Tyre pressure		Wheel rims	
	Front	Rear	Wheel rim	Wheel offset
12.0-18 /12 PR	2.5[1]	2.5	9x18	30 mm
10.5-18/8PR[2]	2.0[1]	2.0		
12-16.5/10PR	1.5[1]	1.5	16.5x9.75	
340/65 R18 113A8 XM108	3.0	2.5	9x18	69 mm wheel offset
325/70 R18 113A8[3]				

1. Increase front tyre pressure by 0.5 bar during pallet forks operation!
2. For snow chains
3. Legal regulations of your country may require separate certification

TD.7.18 Weight indications for model 340-01

Weight indications for model 340-01[1]	Standard cab	Open cab
Kerb weight	1860 kg	1780 kg
Front axle load	600 kg	560 kg
Rear axle load	1260 kg	1220 kg
Gross weight rating	2300 kg	
Front axle weight rating	1600 kg	
Rear axle weight rating	1600 kg	
Max. authorised load for towing facility	2000 kg	

1. With driver, standard bucket and full fuel tank

TD.7.19 Weight indications for model 341-01

Weight indications for model 341-01[1]	Standard cab	Open cab
Kerb weight	3200 kg	3120 kg
Front axle load	1150 kg	1110 kg
Rear axle load	2050 kg	1890 kg
Gross weight rating	3800 kg	
Front axle weight rating	2750 kg	
Rear axle weight rating	2750 kg	
Max. authorised load for towing facility	2500 kg	

1. With driver, standard bucket and full fuel tank

TD.7.20 Weight indications for model 341-02

Weight indications for model 341-02[1]	Standard cab	Open cab
Kerb weight	3300 kg	3220 kg
Front axle load	1070 kg	1030 kg
Rear axle load	2230 kg	2190 kg
Gross weight rating	3800 kg	
Front axle weight rating	2750 kg	
Rear axle weight rating	2750 kg	
Max. authorised load for towing facility	2500 kg	

1. With driver, standard bucket and full fuel tank

TD.7.21 Noise levels

Sound power level	Model 340-01	Model 341-01/341-02
Measured value	98.5 dB (A)	100.5 dB (A)
Guaranteed value	100 dB (A)	102 dB (A)
Noise level in the cab (standard cab) (open cab)	 79 dB (A) 82 dB (A)	 76 dB (A) 82 dB (A)

Important!

Measurement of sound power level according to EC Directive 2000/14 EC. Noise level at the driver's ear measured according to EC Directives 84/532/EEC, 89/514/EEC and 95/27/EEC. Measurements carried out on asphalted surface.

TD.7.22 Vibration

Vibration	
Effective acceleration value for the upper extremities of the body	$< 2.5 \frac{m}{s^2}$
Effective acceleration value for the body	$< 0.5 \frac{m}{s^2}$

TD.7.23 Coolant compound table

Outside temperature	Coolant			
	Water	Anticorrosion agent		Antifreeze agent
Up to °C	% by volume	cm³/l	% by volume	% by volume
4	99	10	1	–
-10	79			20
-20	65			34
-25	59			40
-30	55			44

TD.7.24 General tightening torques

Screw dimensions	Tightening torques in Nm[1]		
	8.8	**10.9**	**12.9**
M4	3	4	5
M5	5.5	8	10
M6	10	14	16
M8	23	34	40
M10	46	67	79
M12	79	115	135
M14	125	185	220
M16	195	290	340
M18	280	400	470
M20	395	560	660
M22	540	760	890
M24	680	970	1150
M27	1000	1450	1700
M30	1350	1950	2300

1. These values are valid for screws with untreated, non-lubricated surfaces

TD.7.25 Specific tightening torques

Description	Tightening torque
Wheel nut	300 $^{\pm 20}$ Nm
Track-rod end (steering ram)	160 Nm
Piston rod (steering ram/track rod)	250 Nm

TD.7.26 Loader unit

Loader unit with bucket [1, 2]	Model 340-01	Model 341-01	Model 341-02
Bucket capacity	0.3 m³ according to ISO	0.5 m³ according to ISO	0.65 m³ according to ISO
Tipping load	1200 kg	1950 kg	2340 kg
Payload	540 kg	900 kg	1170 kg
Bucket width	1180 mm	1550 mm	1650 mm
Dump height	2075 mm	2410 mm	2300 mm
Pin height	2578 mm	2970 mm	3020 mm
Dump reach	600 mm	500 mm	250 mm
Scraping depth	51 mm	49 mm	
Dump-in angle	40°	45°	
Dump-out angle	40°	40°	
Breakout force (lift ram)	18.7 kN	28.0 kN	
Breakout force (tilt ram)	15.1 kN	27.3 kN	
Fork arms (payloads stated for 400 mm load distance)			
Payload, safety factor 1.25:	780 kg (standard cab) 750 kg (open cab)	1250 kg (standard cab) 1220 kg (open cab)	1600 kg (standard cab) 1550 kg (open cab)
Payload, safety factor 1.67:	580 kg (standard cab) 560 kg (open cab)	930 kg (standard cab) 910 kg (open cab)	1200 kg (standard cab) 1150 kg (open cab
Tipping load	975 kg	1560 kg	2000 kg
Lift height	2250 mm	2620 mm	2670
Movable payload in transport position (safety factor 1.25):	950 kg	1510 kg	1900 kg

1. Model 340-01 with tyres 28 x 9.00-15
   Model 341-01/341-02 with tyres 10.5-18
2. Model 340-01 with standard bucket 10255-00
   Model 341-01 with standard bucket 10258-00
   Model 341-02 with standard bucket 1000123977

TD.7.27 Dimensions model 340-01

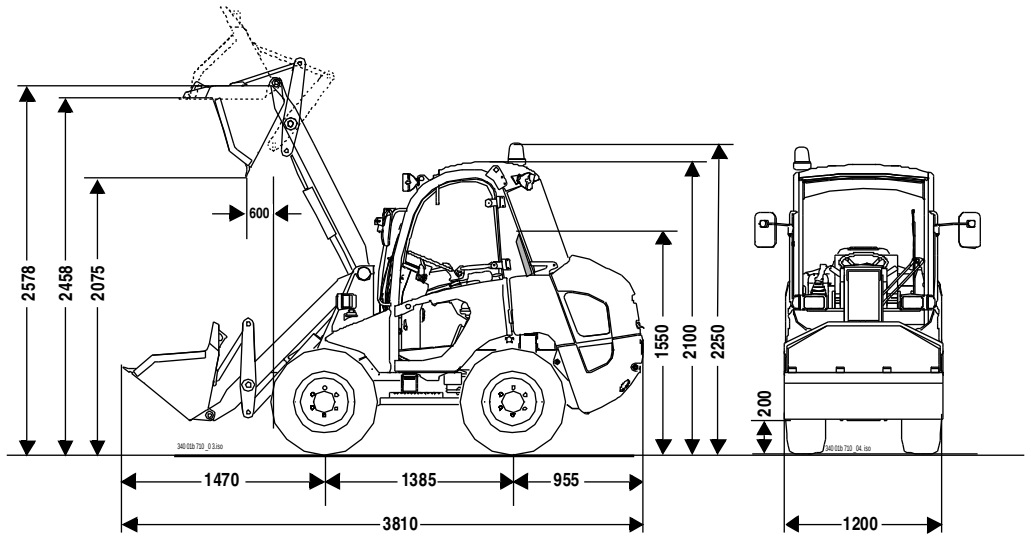

Fig. 21: Machine dimensions (model 340-01)

Dimensions	Model 340-01
Overall length[1]	3810 mm
Overall height [2, 3]without cab	1550 mm
Overall height[2] with cab	2100 mm
Overall height[2] with cab and protective FOPS screen[4] (option)	2160 mm
Overall height[2] with cab and rotating beacon (option)	2250 mm
Overall height[2] with ROPS bar (option)	2160 mm
Overall height[2, 5]with ROPS bar folded down (option)	1745 mm
Overall width without bucket[6]	1180 mm
Overall width[1]	1200 mm
Ground clearance in transport position of loader unit	200 mm
Ground clearance [2] below rear axle gearbox	200 mm
Track width, front/rear	904 mm
Wheelbase	1385 mm
Turning radius[7]	1940 mm

1. With standard buckets 10255-00, 10256-00
2. With tyres 28 x 9.00-15 (machine higher by 30 mm with tyres 10-16.5)
3. Top edge of inside trim panel (behind seat)
4. According to ISO 3449 category I
5. Measured at upper edge of pivot
6. With outside mirrors folded in
7. Measured at outer edge of tyres

TD.7.28 Dimensions model 341-01

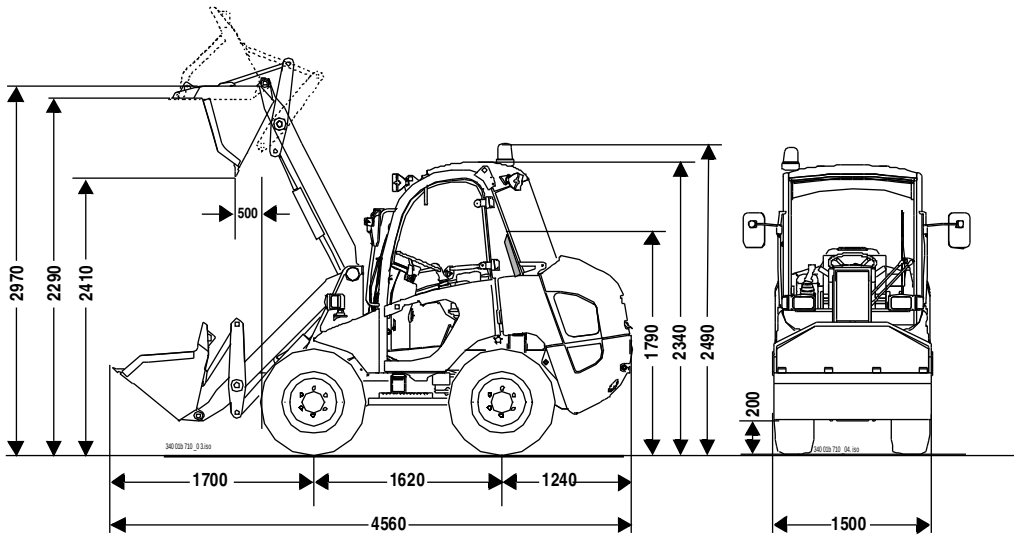

Fig. 22: Machine dimensions (model 341-01)

Dimensions	Model 341-01
Overall length[1]	4560 mm
Overall height [2, 3]without cab	1790 mm
Overall height[2] with cab	2340 mm
Overall height[2] with cab and protective FOPS screen[4] (option)	2400 mm
Overall height[2] with cab and rotating beacon	2490 mm
Overall height[2] with ROPS bar (option)	2400 mm
Overall height[2, 5]with ROPS bar folded down (option)	1985 mm
Overall width without bucket[6]	1500 mm
Overall width[1]	1550 mm
Ground clearance in transport position of loader unit	200 mm
Ground clearance [2] below rear axle gearbox	320 mm
Track width, front/rear	1193 mm
Wheelbase	1620 mm
Turning radius[7]	2350 mm

1. With standard buckets 10258-00, 10259-00
2. With tyres 10.5-18 (machine higher by 30 mm with tyres 12-16.5)
3. Top edge of inside trim panel (behind seat)
4. According to ISO 3449 category I
5. Measured at upper edge of pivot
6. With outside mirrors folded in
7. Measured at outer edge of tyres

TD.7.29 Dimensions model 341-02

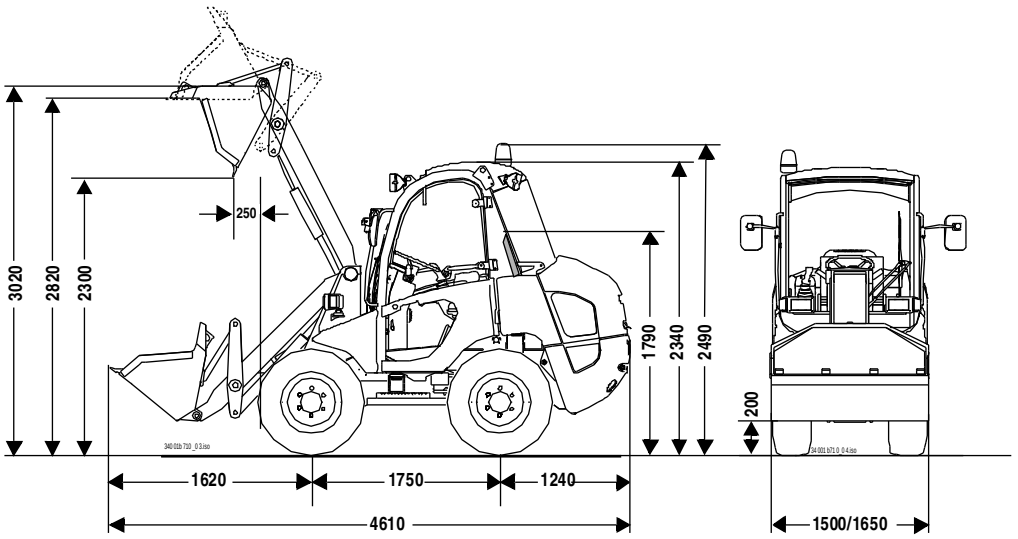

Fig. 23: Machine dimensions (model 341-02)

Dimensions	Model 341-02
Overall length[1]	4610 mm
Overall height [2, 3]without cab	1790 mm
Overall height[2] with cab	2340 mm
Overall height[2] with cab and protective FOPS screen[4] (option)	2400 mm
Overall height[2] with cab and rotating beacon (option)	2490 mm
Overall height[2] with ROPS bar (option)	2400 mm
Overall height[2, 5]with ROPS bar folded down (option)	1985 mm
Overall width without bucket[6]	1500 mm
Overall width[1]	1650 mm
Ground clearance in transport position of loader unit	200 mm
Ground clearance[2] below rear axle gearbox	320 mm
Track width, front/rear	1193 mm
Wheelbase	1750 mm
Turning radius[7]	2430 mm

1. With standard bucket (spare part no. 1000124345)
2. With tyres 10.5-18 (30 mm less with tyres 12-16.5)
3. Top edge of inside trim panel (behind seat)
4. According to ISO 3449 category I
5. Measured at upper edge of pivot
6. With outside mirrors folded in
7. Measured at outer edge of tyres

Maintenance

3 Maintenance

3.1 Fluids and lubricants

Component/ application	Engine/machine fluid	SAE grade Specification	Season/ temperature	Capacities[1]
Diesel engine	Engine oil[2]	SAE 10W; EO10[3]	Below -5 °C	7.2 l (model 340-01) 8.6 l (model 341-01/341-02)
		SAE 20W20; EO20[3]	-10 to +10 °C	
		SAE 30; EO30[3]	5 to 30 °C	
		HD-C 10W-40; EO1040B[3]	Year-round	
		HD-C 15W-40; EO1540B[3]		
Rear axle transfer gearbox	Gearbox oil[4]	80 W 90 API GL5 or SAE 90 LS (hypoid gear oil)	Year-round	0.3 l
Planetary drives – left and right, front and rear axle				0.6 l each (model 340-01) 0.5 l each (model 341-01/341-02)
Front and rear axle differentials				2.5 l each
Hydraulic oil tank	Engine oil[2]	SAE 5 W/30	Up to -25 °C	About 40 l (model 340-01) About 65 l (model 341-01/341-02)
		SAE 5 W/40; EO 0540B[3]		
		SAE 10 W/40; EO 0540B[3]	Up to -15 °C	
		SAE 15 W/40; EO 1540B[3]	Up to -10 °C	
	Hydraulic oil[5]	HVLPD 46 (HYD0530[3])	Year-round	
	Biodegradable oil	AVILUB Syntofluid 46		
		PANOLIN HLP Synth 46		
Grease nipples	Multipurpose grease	Lithium-saponified brand-name grease MPG-A[3]	Year-round	As required
Battery terminals	Acid-proof grease	SP-B[3]	Year-round	As required
Mounting of pins, shafts etc.	Special grease	Optimoly paste "TA"[6] White paste	Year-round	As required
Fuel tank	Diesel fuel[7]	Grade no. 2-D	Over 4 °C	About 30 l (model 340-01) About 62 l (model 341-01/341-02)
		Grade no. 1-D	Below 4 °C	
Engine and hydraulic oil cooler	Coolant	Water + antifreeze; SP-C[3]	Year-round	About 4.2 l (model 340-01) About 5.3 l (model 341-01/341-02)
Washer system	Cleaning agent	Water + antifreeze		About 1.5 l

1. The capacities indicated are approximative values; the oil level check alone is relevant for the correct oil level
2. MIL-L-2104C; API CD/CE/CF4; CCMC-D4
3. Abbreviation for lubricants (Hauptverband der Deutschen Bauindustrie e. V. – German construction engineering association)
4. MIL-L-2105B; API-GL5
5. DIN 51 524
6. 250 gr tube, order no.: 0 00 441 32 10
7. DIN 51 601, min 45 cetane

3.2 Explanation of symbols on the maintenance label

Symbol	Explanation
	Before starting maintenance work, follow the safety instructions in the operation manual!
	Before starting maintenance work, read the “Maintenance” chapter in the operation manual!
	Carry out a functional check of the light system!
	Check tyres for damage, pressure and tread depth!
	Carry out a functional check and synchronise the steering system!
	Carry out a functional check of the brake system!
	Check hydraulic oil level. Fill up if necessary!
	Check engine oil level. Fill up if necessary!
	Check coolant level. Fill up if necessary!
	Check cooler for engine coolant and hydraulic oil for contamination. Clean if necessary!
	Check condition and initial tension of V-belt. Retighten or replace if necessary!
	Leakage check: Check for tightness, leaks and chafing: pipes, flexible lines and screw connections. Rectify if necessary!
	Lubrication service: Lubricate the assemblies concerned!

3.3 Maintenance label

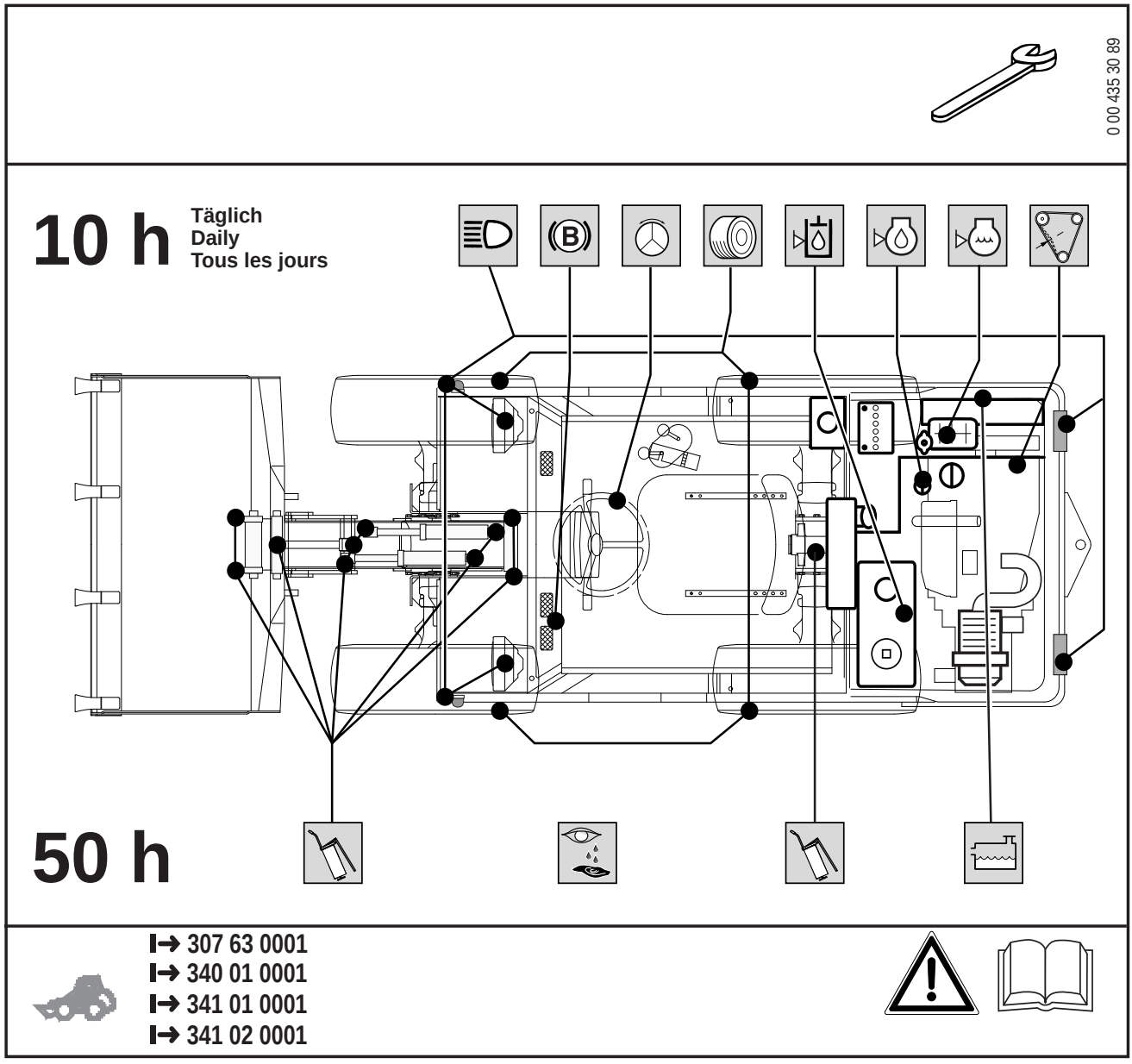

0004353089.eps

3.4 Maintenance plan (overview)

Work description
For service and maintenance work on the attachment, please refer to the operation and maintenance manual of the attachment manufacturer as well.

	Maintenance plan/service hours (s/h)					
	Maintenance work (once a day)	Delivery inspection	"A" every 50 s/h once a week	1st Inspection[1] at 100 s/h	2nd inspection every 500 s/h[2]	Once a year every 1500 s/h
Oil and filter changes ( ):						
Carry out the following oil and filter changes (check oil levels after test run):						
• Engine oil				●	●	●
• Engine oil filter				●	●	●
• Fuel filter				●	●	●
• Fuel line filter				●	●	●
• Fuel/water separator					●	●
• Air filter insert [3,4] replace safety cartridge every 3rd time the air filter insert is replaced						●
• Gearbox oil in front and rear axle differentials and in rear axle gearbox				●		●
• Gearbox oil in front and rear axle planetary drives (left and right)				●		●
• Hydraulic oil[5]						●
• Hydraulic oil filter insert				●		●
• Breather filter – hydraulic oil tank [4]						●
Inspection work ( ):						
Check the following material. Refill if necessary:						
• Engine oil	●	●	●			
• Engine coolant [6](also check antifreeze in autumn/winter and at temperatures below 4 °C!)	●	●	●	●	●	●
• Hydraulic oil	●	●	●	●	●	●
• Gearbox oil in front and rear axle differentials and in rear axle gearbox		●			●	●
• Gearbox oil in front and rear axle planetary drives (left and right)		●			●	●
• Check cooler for engine and hydraulic oil for contamination. Clean if necessary[7]			●	●	●	●
• When using biodegradable oil: drain the condensation water in the hydraulic oil tank [5]					●	●
• Clean dust valve on air filter housing [3]	●	●	●	●	●	●
• V-belt: check condition and pre-tension. Retighten or replace if necessary		●	●	●	●	●
• Check the fuel/water separator. Drain water if necessary[8]			●	●	●	●
• Check valve tip clearance (engine timing). Set if necessary					●	●
• Battery: check charge condition					●	●
• Heating: clean dust filter, replace every 1500 s/h if necessary[9]						●
• Check and set service brake and handbrake pads. Replace if necessary				●	●	●
• Tyre check (damage, air pressure, tread depth)	●	●	●	●	●	●

3.4 Maintenance plan (overview)

Work description
For service and maintenance work on the attachment, please refer to the operation and maintenance manual of the attachment manufacturer as well.

	Maintenance plan/service hours (s/h)					
	Maintenance work (once a day)	Delivery inspection	"A" every 50 s/h once a week	1st Inspection[1] at 100 s/h	2nd inspection every 500 s/h[2]	Once a year every 1500 s/h
Check screws and nuts or screw connections for tightness on the following assemblies/components. Retighten if necessary						
• Engine and engine bearing				●	●	●
• Steering system				●	●	●
• Hydraulic system				●	●	●
• Loader unit (pin locking)				●	●	●
• Axle mounting, axle suspension				●	●	●
• Counterweight (attachment)				●	●	●
• Fastening screws of cardan shafts				●	●	●
• Fastening screws of cab				●	●	●
• Wheel nuts		●		●	●	●
• Electric system: check electric and earth connections, chafing on wiring harness, battery terminals		●		●	●	●
Lubrication service ( ):[10]						
Lubricate the following assemblies/components:						
• Rear axle oscillating bearing		●	●	●	●	●
• Front and rear axle planetary drive bearings (left and right)		●	●	●	●	●
• Loader unit						
• Lift frame bearing		●	●	●	●	●
• Tilt rod bearing		●	●	●	●	●
• Tilt lever bearing		●	●	●	●	●
• Lift ram bearing		●	●	●	●	●
• Tilt ram bearing		●	●	●	●	●
• Quickhitch facility: bearing on lift frame		●	●	●	●	●
• Hinges, joints and fittings (e.g. door arrester)			●	●	●	●

3.4 Maintenance plan (overview)

Work description
For service and maintenance work on the attachment, please refer to the operation and maintenance manual of the attachment manufacturer as well.

	Maintenance plan/service hours (s/h)					
	Maintenance work (once a day)	Delivery inspection	"A" every 50 s/h once a week	1st Inspection[1] at 100 s/h	2nd inspection every 500 s/h[2]	Once a year every 1500 s/h
Functional check ( ):						
Check the function of the following assemblies/components. Rectify if necessary:						
• Service brake and handbrake	●	●	●	●	●	●
• Steering system	●	●	●	●	●	●
• Lights and electric system	●	●	●	●	●	●
Leakage check ( ):						
Check for tightness, leaks and chafing: pipes, flexible lines and screw connections of the following assemblies and components. Rectify if necessary:						
• Air intake line (air filter – engine)	●	●	●	●	●	●
• Engine lubrication (engine – filter)	●	●	●	●	●	●
• Fuel lines	●	●	●	●	●	●
• Cooling system (coolant and hydraulic oil)	●	●	●	●	●	●
• Steering system (flexible lines and rams)	●	●	●	●	●	●
• Hydraulic system/loader unit (flexible lines and rams) [11]	●	●	●	●	●	●

1. Work to be carried out once after the first 100 s/h. This work must be carried out by an authorised workshop for warranty claims to be acknowledged.
2. Work after the first 500 s/h (2nd Inspection) must be carried out by an authorised workshop for warranty claims to be acknowledged
3. Replace filter insert as indicated on the filter housing, however at least once a year or every 1500 service hours.
4. When working in an acidic environment, replace the filter every 300 s/h!
5. When using biodegradable oil: drain the condensation water in the hydraulic oil tank every 500 s/h, in any case before the cold season.
6. Replace the engine coolant every other year!
7. Depending on operation and dust conditions, it may necessary to clean the cooler more frequently
8. Check every 50 s/h and drain the water
9. Depending on operation and dust conditions, it may be necessary to replace the dust filter more frequently
10. Lubricate attachment according to manufacturer's instructions!
11. Replace flexible lines every 6 years (UVV, DIN 20066 part 5)

3.5 Maintenance kits

3.5.1 Maintenance kit model 340-01 (180) up to serial no. 340010295

- Maintenance kit for maintenance plan **"1st inspection" at 100 s/h (A)**
  ➥ Maintenance kit 0110030030 (1000098852)
- Maintenance kit for maintenance plan **"2nd inspection" at 500 s/h (B)**
  ➥ Maintenance kit 0110030130 (1000098853)
- Maintenance kit for maintenance plan **"Once a year" every 1500 s/h (C)**
  ➥ Maintenance kit 0110030230 (1000098782)

3.5.2 Maintenance kit model 340-01 (180) starting serial no. 340010296

- Maintenance kit for maintenance plan **"1st inspection" at 100 s/h (A)**
  ➥ Maintenance kit 1000127057
- Maintenance kit for maintenance plan **"2nd inspection" at 500 s/h (B)**
  ➥ Maintenance kit 1000127058
- Maintenance kit for maintenance plan **"Once a year" every 1500 s/h (C)**
  ➥ Maintenance kit 1000127059

3.5.3 Maintenance kit model 341-02 (280) up to serial no. 341020016

- Maintenance kit for maintenance plan **"1st inspection" at 100 s/h (A)**
  ➥ Maintenance kit 1000104281
- Maintenance kit for maintenance plan **"2nd inspection" at 500 s/h (B)**
  ➥ Maintenance kit 1000104282
- Maintenance kit for maintenance plan **"Once a year" every 1500 s/h (C)**
  ➥ Maintenance kit 1000104283

3.5.4 Maintenance kit model 341-02 (280) starting serial no. 341020017

- Maintenance kit for maintenance plan **"1st inspection" at 100 s/h (A)**
  ➥ Maintenance kit 1000130520
- Maintenance kit for maintenance plan **"2nd inspection" at 500 s/h (B)**
  ➥ Maintenance kit 1000130721
- Maintenance kit for maintenance plan **"Once a year" every 1500 s/h (C)**
  ➥ Maintenance kit 1000130722

3.6 Refuelling

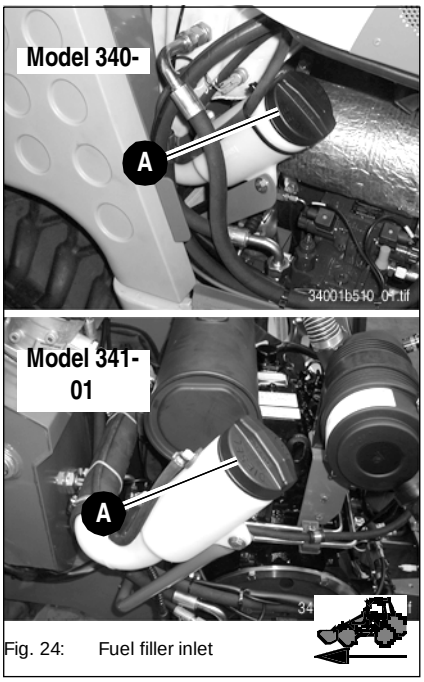

Fig. 24: Fuel filler inlet

Filler inlet **A** for the fuel tank is located under the engine cover, on the left in driving direction.

Danger!

All work involving fuel carries an increased

Danger of fire and poisoning!

☞ *Do not refuel in closed rooms*

☞ *Never carry out work on the fuel system in the vicinity of naked flames or sparks*

Environment!

Use a suitable container to collect the fuel as it drains and dispose of it in an environmentally friendly manner!

Important!

Do not run the fuel tank completely dry. Otherwise, air is drawn into the fuel system. This requires bleeding the fuel system
– see *Bleeding the fuel system* on page 3-11.

3.6.1 Stationary fuel pumps

General

Only refuel from stationary fuel pumps. Fuel from barrels or cans is usually contaminated.

Even the smallest particles of dirt can cause

- Increased engine wear
- Malfunctions in the fuel system and
- Reduced effectiveness of the fuel filters

Refuelling from barrels

If refuelling from barrels cannot be avoided, note the following points:

- Barrels must neither be rolled nor tilted before refuelling
- Protect the suction pipe opening of the barrel pump with a fine-mesh strainer
- Immerse it down to a max. 15 cm above the floor of the barrel
- Only fill the tank using refuelling aids (funnels or filler pipes) with integral microfilter

Keep all refuelling containers clean at all times

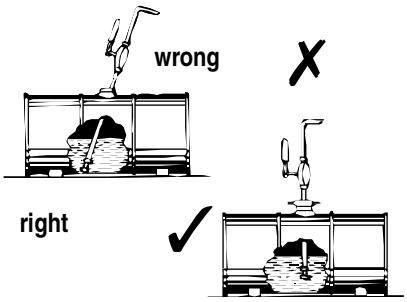

Fig. 25: Refuelling from a barrel

3.7 Fuel prefilter (water separator)

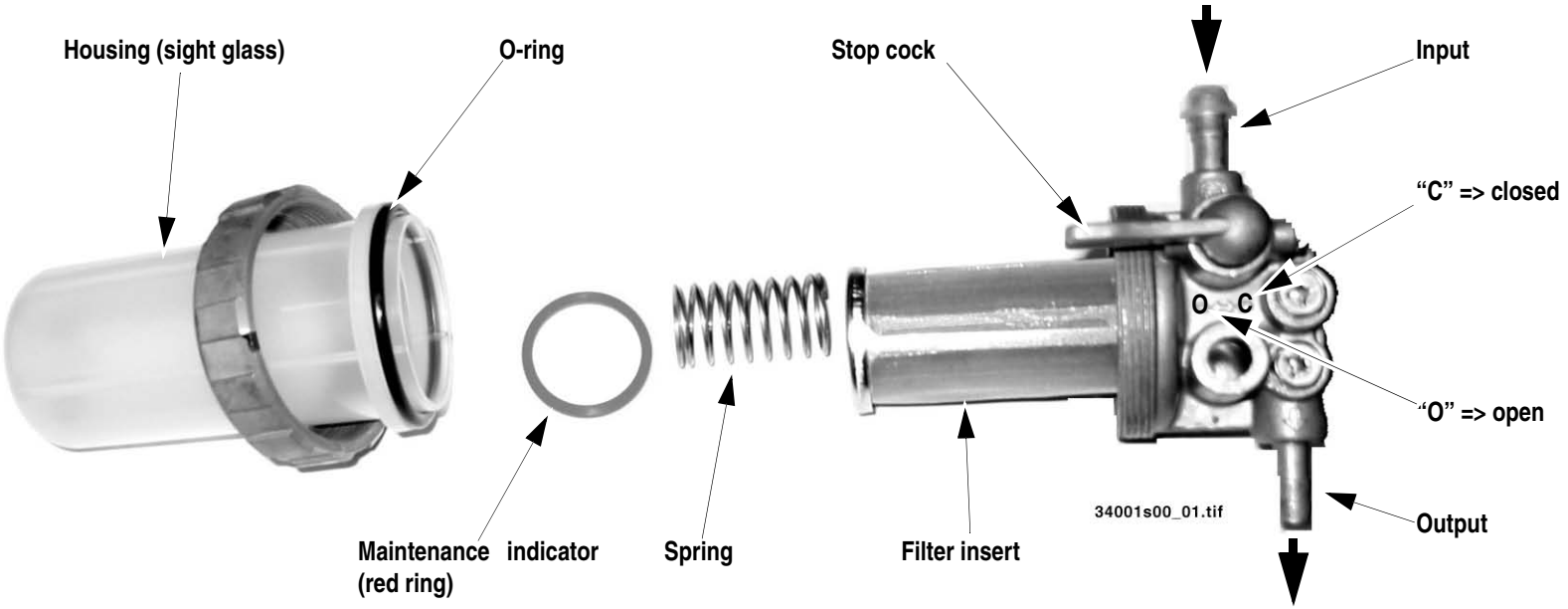

Clean the fuel prefilter if the maintenance indicator (red ring) rises in the sight glass with the engine running.

Environment!

Use a suitable container to collect the fuel as it drains and dispose of it in an environmentally friendly manner!

☞ Close the stop cock to position **"C"**

☞ Remove and clean the housing (sight glass)

☞ Remove and clean the filter insert

☞ Mount the filter insert

☞ Mount the housing (sight glass) with the maintenance indicator (red ring) and the spring

☞ Open the stop cock to position **"O"**

3.8 Cleaning the fuel filter

Environment!

Use a suitable container to collect the fuel as it drains and dispose of it in an environmentally friendly manner!

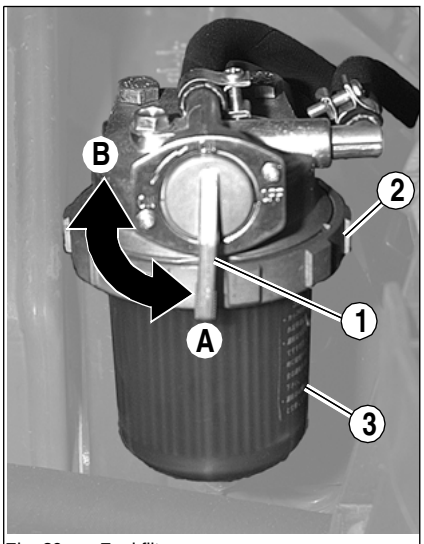

Fig. 26: Fuel filter

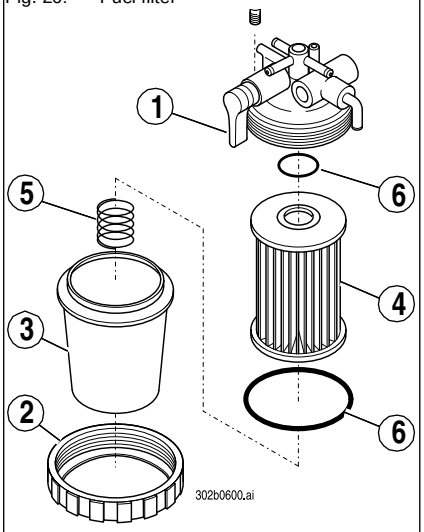

Fig. 27: Fuel filter: assembly drawing

Removing the fuel filter

☞ Close fuel cock **1**. To do this:
Turn the cock from **A** to **B**

☞ Unscrew union nut **2**.
Caution! The filter housing is filled with fuel

☞ Remove filter housing **3**

☞ Clean filter housing **3** and filter element **4** with diesel fuel

Mounting the fuel filter

☞ Mount all elements in the reverse order (fig. **27**)

Important!

To bleed the fuel system more quickly:

- Fill filter housing **3** with fuel before mounting it

☞ Tighten union nut **2** by hand

☞ Open fuel cock **1**. To do this:
Turn the cock from **B** to **A**

☞ Bleed the fuel system – see *Bleeding the fuel system* on page 3-11

☞ Make a test run – and check for tightness!

3.9 Bleeding the fuel system

Caution!

Wheel loaders **up to serial no. 340010295 (180)**
up to serial no. 341020016 (280)

☞ *Bleed the fuel system after you have carried out repair work*

starting serial no. 340010296 (180)
starting serial no. 341010017 (280)

☞ *The fuel system bleeds itself automatically when starting the engine*

Danger!

If the fuel, as it drains, comes into contact with hot engine parts or the exhaust system, there is an increased

Danger of burns!

☞ *Never bleed the fuel system if the engine is hot!*

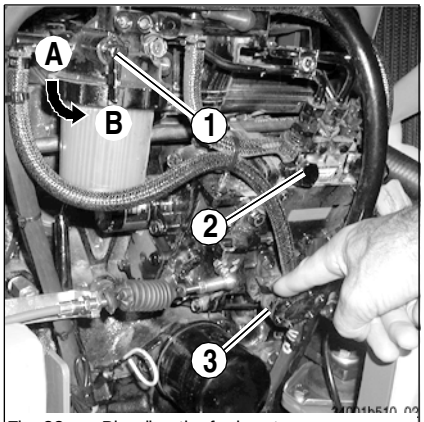

Fig. 28: Bleeding the fuel system

☞ Bleed the fuel system as follows:

- Fill the fuel tank
- Open fuel cock **1** on the fuel filter. To do this:
  Turn lever from **A** to **B**
- Slacken bleed screw **2** on the injection pump by a few turns
- Actuate the lever on fuel pump **3** manually until the fuel comes out free of air from the slackened bleed screw
- Tighten bleed screw **2** on the fuel injection pump
- Start the engine

If the engine runs smoothly for a while, and then stops; or if it does not run smoothly:

- Switch off the engine
- Check once again if there is any air in the fuel system
- Bleed the fuel system again as described above
- Have this checked by authorised staff if necessary

3.10 Engine lubrication system

Caution!

If the engine oil level is too low or if an oil change is overdue, this may cause

Engine damage or loss of output!

☞ *Have oil changed by an authorised workshop – see maintenance plan in the appendix*

3.10.1 Checking the oil level

Important!

Check the oil level every 10 service hours or once a day.
We recommend checking it before starting the engine. After switching off a warm engine, wait at least 5 minutes before checking.

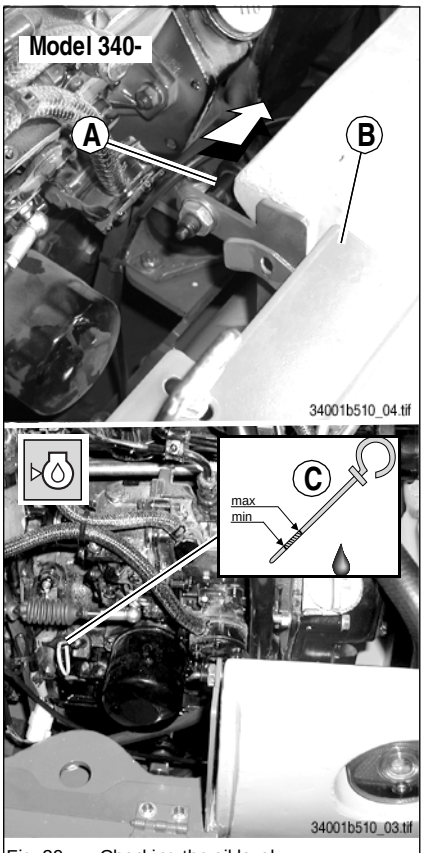

Fig. 29: Checking the oil level

Checking the oil level

☞ Proceed as follows:

- Park the machine on level ground
- Switch off the engine!
- Apply the handbrake
- Open the engine cover
- (Model 340-01 only) Pull maintenance flap **B** and latch **A** to the right
  - Fold back maintenance flap **B**
- Oil dipstick **C**:
  - Pull it out
  - Wipe it with a lint-free cloth
  - Push it back in as far as possible
  - Withdraw it and read off the oil level

☞ However if necessary, fill up the oil at the latest when the oil reaches the MIN mark on dipstick **C**

3.10.2 Changing engine oil

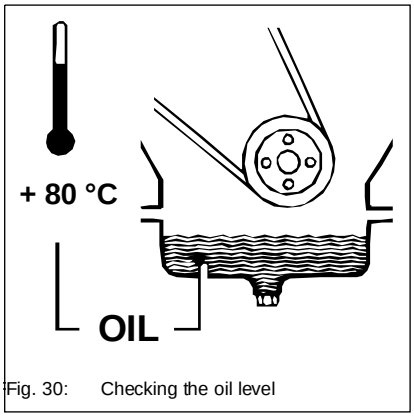

Fig. 30: Checking the oil level

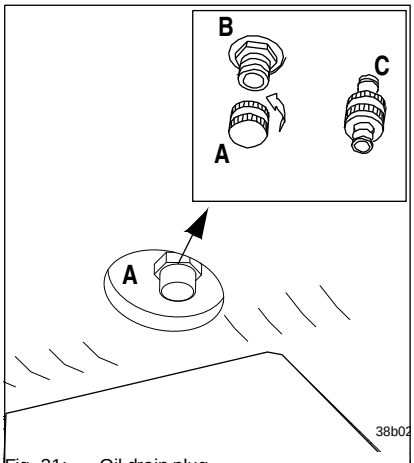

Fig. 31: Oil drain plug

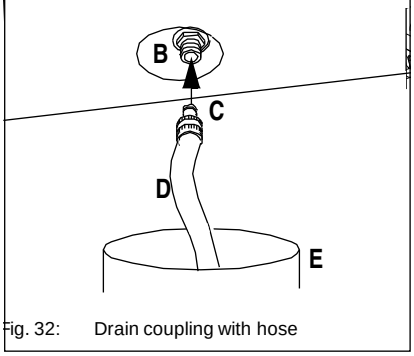

Fig. 32: Drain coupling with hose

Danger!

Careful when draining hot oil:

Danger of burns!

☞ *Wear protective gloves!*

☞ *Use suitable tools, e.g. for unscrewing the oil drain plug!*

☞ Change the oil as follows:

- Park the machine on level ground
- Let the engine run until it reaches service temperature (oil temperature about 80 °C)
- Switch off the engine

Environment!

Use a suitable container to collect the engine oil as it drains and dispose of it in an environmentally friendly manner!

- Place container **E** for collecting the oil under the engine
  ➥ (minimum capacity: 12 l).
- Unscrew cap **A** of drain valve **B**.
- Screw drain coupling **C** onto the drain valve with a sufficiently long hose **D**
  ➥ Make sure the end of the hose is in container **E** used for collecting the oil.
- Completely drain the oil.
- Unscrew drain coupling **C**.
- Screw cap **A** onto drain valve **B**
- Fill in engine oil
- Start the engine and let it run briefly at low revs.
- Switch off the engine.
  ➥ Wait a moment until all the oil has run into the oil sump
- Check the oil level again.
- Fill up if necessary and check again
- Completely remove all oil spills from the engine

3.10.3 Changing the engine oil filter cartridge

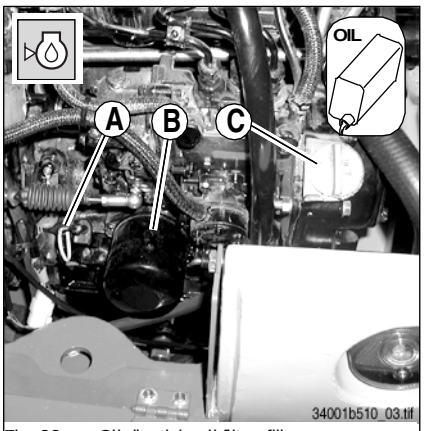

Fig. 33: Oil dipstick, oil filter, filler cap

Danger!

Hot engine oil –

Danger of burns!

☞ *Wear protective gloves*

Environment!

Use a suitable container to collect the engine oil as it drains. Dispose of used oil and filters in an environmentally friendly manner!

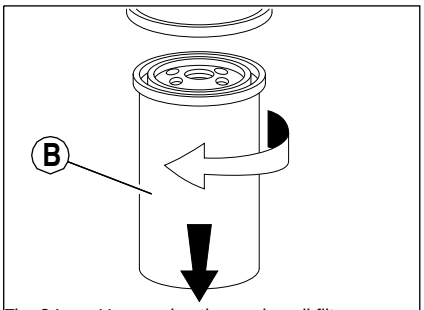

Fig. 34: Unscrewing the engine oil filter

☞ Change the oil filter as follows:

- Switch off the engine
- Place a suitable container under the oil filter
- Unscrew oil filter cartridge **B** using a commercially available tool

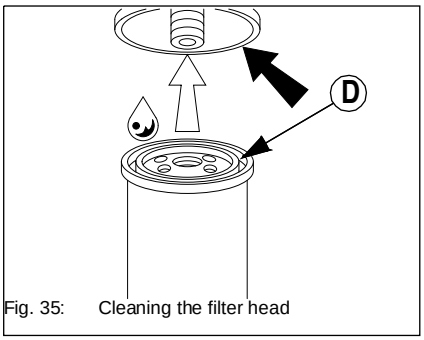

Fig. 35: Cleaning the filter head

- Clean the inside of the filter head
- Apply a thin coat of engine oil to seal **D** of the new oil filter cartridge
- Screw oil filter cartridge **B** until the filter contacts the sealing surface of the filter head

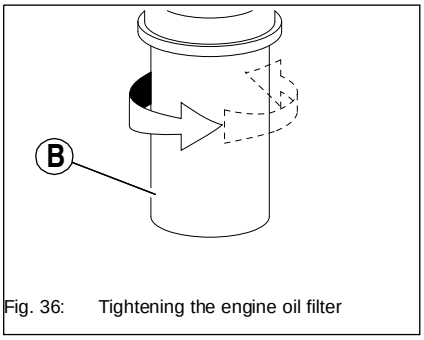

Fig. 36: Tightening the engine oil filter

- Tighten oil filter cartridge **B** by hand by about a further half revolution
- Check engine oil level (oil dipstick fig. 33/**A**)
- Let the engine run briefly
- Switch off the engine
- Check oil filter cartridge **B** for leakage, tighten by hand if necessary
- Check the engine oil level, refill engine oil if necessary (fig. 33/**C**)
- Completely remove all oil spills from the engine
- Dispose of used oil filter cartridges in an environmentally friendly manner

3.11 Checking/filling up the coolant level

Important!

Check the coolant level every 10 service hours or once a day.
We recommend checking it before starting the engine.

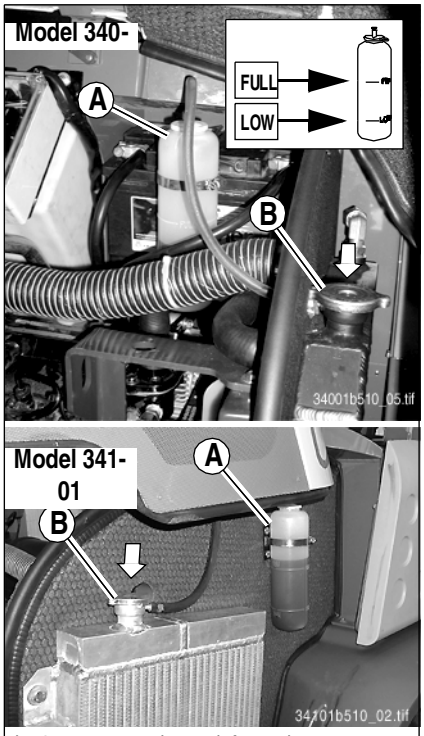

Fig. 37: Expansion tank for coolant

Checking the coolant level

☞ Proceed as follows:

- Park the machine on level ground
- Switch off the engine!
- Apply the handbrake
- Open the engine cover
- Check the coolant level in the transparent expansion tank **A**

  ➥If the coolant level is below seam **LOW** of the expansion tank:
- Fill up the coolant

Filling up coolant

Danger!

Never open the coolant tank and never drain coolant if the engine is warm since the cooling system is under high pressure

–

Danger of burns!

☞ *Wait at least 10 minutes after switching off the engine!*

☞ *Wear protective gloves and clothing*

☞ *Open filler cap **B** to the first notch and release the pressure*

After the engine has cooled down:

☞ Reduce the overpressure in the radiator. To do this:
Press filler cap **B** down

☞ Open the cap to the first notch and fully release the pressure

☞ Open filler cap **B**

☞ Fill in coolant up to the lower edge of the filler inlet (radiator)

☞ Close filler cap **B**

☞ Start the engine and let it warm up for about 5 – 10 minutes

☞ Switch off the engine and check the coolant level again

➥ The coolant level must be between the **LOW and FULL** tank seams

☞ If necessary, fill up coolant and repeat the procedure until the coolant level remains constant

3.12 Air filter

Caution!

The filter cartridge will be damaged if it is washed or brushed out! Bear in mind the following to avoid premature engine wear!

☞ *Do not clean the filter cartridge*

☞ *Replace the filter cartridge when the telltale comes on*

☞ *Never reuse a damaged filter cartridge*

☞ *Ensure cleanliness when replacing the filter cartridge*

Weekly check of air filter contamination

The filter cartridge is monitored by maintenance display **B** on the filter housing.

☞ Filter cartridge **D** must be replaced:

- If the **red** mark **C** in maintenance display **B** is visible
- At the latest after 1500 service hours (however once a year)

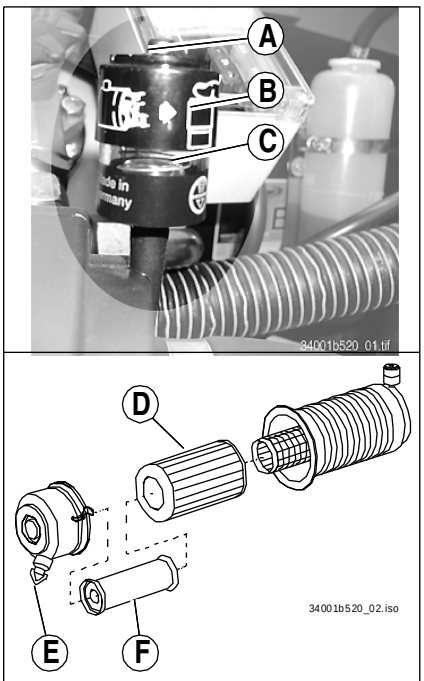

Fig. 38: Air filter with maintenance display

Important!

For **applications in especially dusty environment**, the air filter is fitted with an extra safety cartridge **F**. Do not clean the safety cartridge. Replace the safety cartridge every third time maintenance work is carried out!

Caution!

Filter cartridges degrade prematurely when in service in acidic air for longer periods of time. This risk is present for example in acid production facilities, steel and aluminium mills, chemical plants and other nonferrous-metal plants.

☞ *Replace filter cartridge **D** and safety cartridge **F** at the latest after 500 service hours!*

Weekly functional check of the dust valve

☞ Proceed as follows:

- Squeeze the discharge slot of dust valve **E**
- Remove hardened dust by compressing the upper area of the valve

☞ Clean the discharge slot if necessary

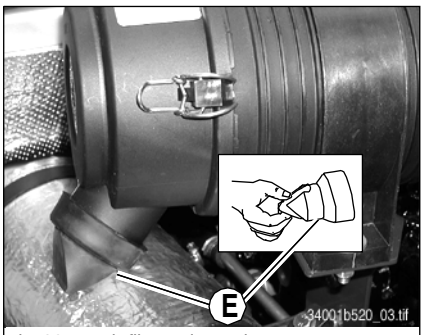

Fig. 39: Air filter – dust valve

3.12.1 Replacing the filter cartridge

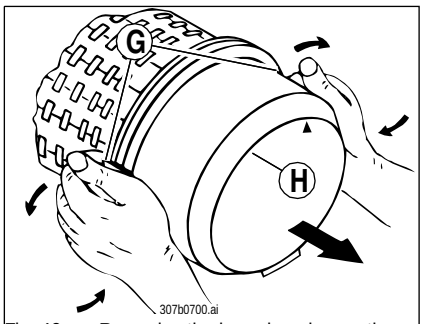

Fig. 40: Removing the lower housing section

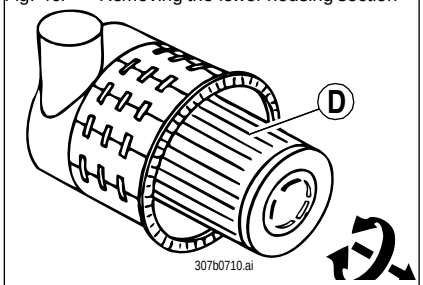

Fig. 41: Removing the filter element

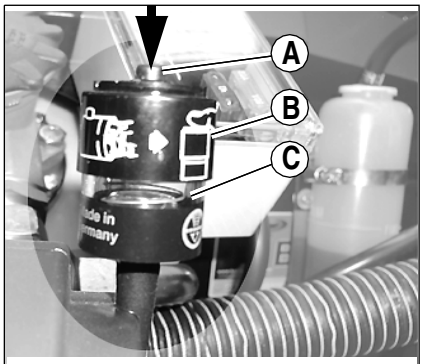

Fig. 42: Air filter with maintenance display

☞ Change filter cartridge **D** as follows:

- Switch off the engine
- Prevent the machine from rolling away and remove the ignition key
- Open the engine cover
- Fold both bow clips **G** on lower housing section **H** to the outside
- Remove lower housing section **H**
- Carefully remove filter cartridge **D** with slightly turning movements
- In addition, every 3rd time the filter is replaced:
- Carefully remove safety cartridge fig.41/**F** with slightly turning movements
- **Make sure** all contamination (dust) inside the upper and lower housing sections has been removed
- Carefully insert a new safety cartridge fig.41/**F** in the upper housing section
- Carefully insert new filter cartridge **D** into the upper housing section
- Position lower housing section **H** (make sure it is properly seated)
- Close both bow clips **G**

☞ After replacing the filter:

- Press reset button **A** to reset red mark **C** in maintenance display **B**

3.13 V-belt

Danger!

Only check or retighten/replace the V-belt when the engine is switched off –

Danger of personal injury!

☞ *Switch off the engine before carrying out inspection work in the engine compartment!*

Caution!

Cracked and stretched V-belts cause engine damage

☞ *Have the V-belt replaced by an authorised workshop*

Check the V-belt once a day or every 10 service hours, and retighten if necessary!

Retighten new V-belts after about 15 minutes of running time.

3.13.1 Checking V-belt tension

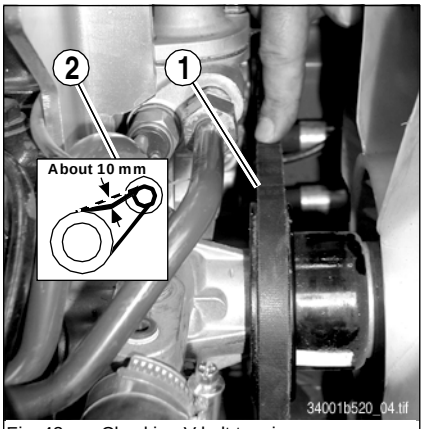

Fig. 43: Checking V-belt tension

☞ Check as follows:

- Switch off the engine
- Prevent the machine from rolling away and remove the ignition key
- Open the engine cover
- Carefully inspect V-belt **1** for damage
- If the V-belt is damaged:
- Have the V-belt replaced by authorised staff
- Press with your thumb to check whether the V-belt can be deflected between the pulleys by no more than about 10 mm **2**
- Retighten the V-belt if necessary

3.13.2 Retightening the V-belt

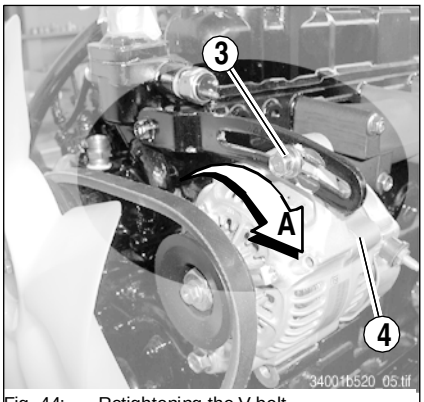

Fig. 44: Retightening the V-belt

☞ Retighten as follows:

- Switch off the engine
- Prevent the machine from rolling away and remove the ignition key
- Open the engine cover
- Slacken fastening screws **3** of alternator **4**
- Use a suitable tool to push the alternator in the direction of arrow **A** until the correct V-belt tension is obtained (fig. 43)
- Keep the alternator in this position, and at the same time retighten fastening screws **3**

3.14 Hydraulic system

3.14.1 Specific safety instructions



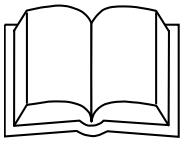

- Release the pressure in all lines carrying hydraulic oil prior to any maintenance and repair work. To do this:
  - Lower all hydraulically controlled attachments to the ground
  - Move all control levers of the hydraulic control valves several times
- Apply the handbrake to prevent the machine from rolling away before you carry out service and maintenance work
- Hydraulic oil escaping under high pressure can penetrate the skin and cause serious injuries. Always consult a doctor immediately even if the wound seems insignificant – otherwise serious infections could set in!
- If the hydraulic oil in the sight glass is cloudy, this indicates that water or air has penetrated the hydraulic system. This may cause damage to the hydraulic pump!

☞Contact your KRAMER ALLRAD dealer immediately



Caution!

Contaminated hydraulic oil, lack of oil or wrong hydraulic oil –

Danger of severe damage to the hydraulic system!

☞ *Take care to avoid contamination when working!*

☞ *Always fill in hydraulic oil using the filling screen!*

☞ *Only use authorised oils of the same type*
– see chapter 3 *"Fluids and lubricants" on page 3-1*

☞ *Always fill in hydraulic oil before the level gets too low*

☞ *If the hydraulic system is filled with biodegradable oil, then only use biodegradable oil of the same type for filling up – observe the sticker on the hydraulic oil tank!*

☞ *Contact customer service if the hydraulic system filter is contaminated with metal chippings. Otherwise, follow-on damage may result!*



Environment!

Collect drained hydraulic oil and biodegradable oil in a suitable container! Dispose of drained oil and used filters by an ecologically safe method.

Always contact the relevant authorities or commercial establishments in charge of oil disposal before disposing of biodegradable oil.

3.14.2 Checking the hydraulic oil level

Caution!

Check the oil level only if the hydraulic oil is cold and the engine switched off!

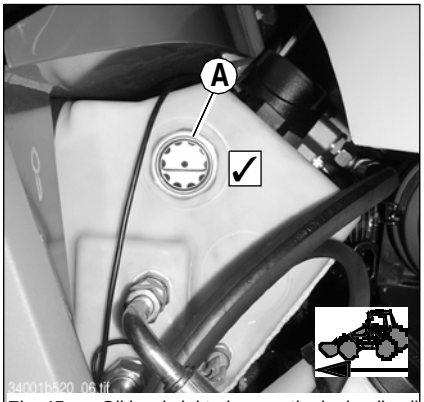

Fig. 45: Oil level sight glass on the hydraulic oil tank

☞ Proceed as follows:

- Park the machine on level ground
- Retract all hydraulic rams
- Switch off the engine
- Apply the handbrake
- Open the engine cover
- Check the hydraulic oil level in sight glass **A**

If the oil level is lower than in fig. **A**:

- Fill up the hydraulic oil

3.14.3 Filling up the hydraulic oil

Do not fill up the hydraulic oil unless the engine is switched off. Otherwise, hydraulic oil will run out of the filler opening on the hydraulic tank.

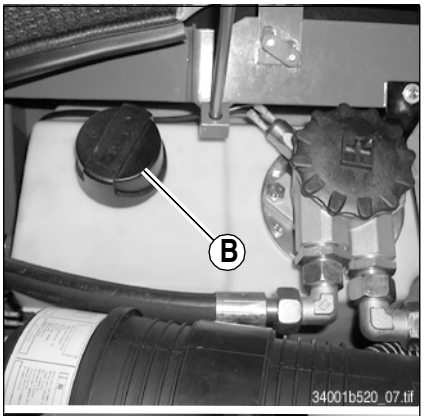

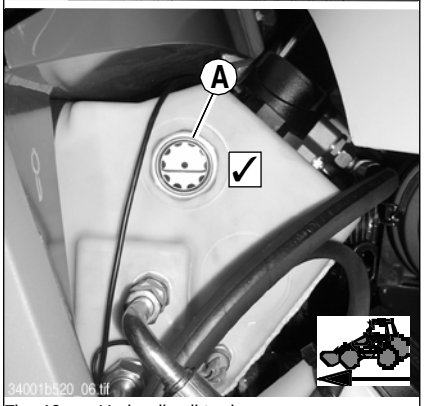

Fig. 46: Hydraulic oil tank

☞ Fill up as follows:

- Park the machine on level ground
- Retract all hydraulic rams
- Switch off the engine
- Apply the handbrake
- Open the engine cover
- Clean the area around the filler and breather filter **B** with a cloth
- Open breather filter **B** by hand

With the filter insert in place:

- Fill up the hydraulic oil
- Check the hydraulic oil level on oil level sight glass **A**
- Fill up if necessary and check again
- Firmly close breather filter **B** by hand

3.14.4 Replacing hydraulic oil

Danger!

Caution when draining hot hydraulic oil and removing the filter element –

Danger of burns!

☞ *Wear protective gloves*

☞ *Use a drain coupling with a sufficiently long hose*

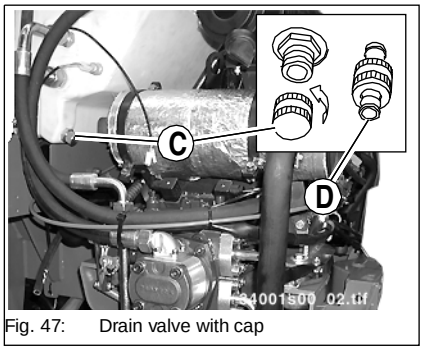

Fig. 47: Drain valve with cap

☞ Proceed as follows:

- Park the machine on level ground
- Lower the loader unit completely. To do this:
  Push the lever forwards
- Tilt in the bucket completely. To do this:
  Push the lever to the left
- Switch off the engine
- Open the engine cover
- Unscrew filler and breather filter fig. 46/**B**
- Place a suitable container to collect the oil as it drains,
  with a minimum capacity of 40 l
- Remove cap **C** of the drain valve
- Screw drain coupling **D** with a sufficiently long hose onto the drain valve
  - ➥ Make sure the end of the hose is in container used for collecting the oil.
  - ➥ The drain valve opens and the oil drains into the container
- Remove the filter insert of the filler and breather filter (fig. 46/**B**)
- Reinsert the clean filter insert
- Rinse the hydraulic oil tank with a little hydraulic oil
- Unscrew the drain coupling from the drain valve
- Screw on cap **C** of the drain valve
- Replace the hydraulic oil reflux filter
- Fill the system with fresh hydraulic oil up to the middle of oil level sight glass 45/**A**
- Screw on a new filler and breather filter (fig. 46/**B**)
- Start the engine

With the engine running at low speed:

- Fully extend the lift and tilt rams on the loader unit
- Turn the steering wheel to the left and right several times, from lock to lock
- Retract all the hydraulic rams again
- Switch off the engine
- Check the hydraulic oil level and fill up if necessary

3.14.5 Use of biodegradable oil

Important information

- Use only the biodegradable hydraulic fluids which have been tested and approved by Kramer-Werke GmbH – see chapter 3 "*Fluids and lubricants*" on page 3-1. Always contact Kramer-Werke GmbH for the use of other products which have not been recommended. In addition, ask the oil supplier for a written declaration of guarantee. This guarantee is applicable to damage occurring on the hydraulic components, which can be proved to be due to the hydraulic fluid
- Use only biodegradable oil of the same type for filling up. In order to avoid misunderstandings, a label providing clear information is located on the hydraulic oil tank (next to the filler inlet) regarding the type of oil currently used! Replace missing labels! The joint use of two different biodegradable oils can affect the quality of one of the oil types. Therefore, make sure the remaining amount of initial hydraulic fluid in the hydraulic system does not exceed 8 % when changing biodegradable oil (manufacturer indications)
- Do not fill up with mineral oil – the content of mineral oil should not exceed 2 % in order to avoid foaming problems and to ensure biological degradability
- When running the machine with biodegradable oil, the same oil and filter replacement intervals are valid as for mineral oil – see maintenance plans in the appendix
- Have the condensation water in the hydraulic oil tank drained by an authorised workshop every 500 service hours, in any case before the cold season. The water content must not exceed 0.1 % by weight
- The instructions in this operation manual concerning environmental protection are also valid for the use of biodegradable oil
- If additional hydraulic attachments are mounted or operated, use the same type of biodegradable oil for these attachments to avoid mixtures in the hydraulic system

Subsequent change from mineral oil to biodegradable oil must be carried out by an authorised workshop or by your KRAMER-ALLRAD partner

3.14.6 Replacing the hydraulic oil reflux filter

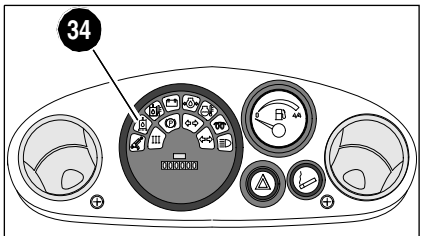

Fig. 48: Hydraulic oil reflux filter: telltale

A red telltale **34** in the instrument panel monitors the filter. Replace the filter:

- If teltale **34** comes on when the hydraulic oil is at operating temperature
- At the latest after 1500 service hours (once a year)

In cold weather telltale **34** may come on immediately after starting the engine. This is caused by increased oil viscosity. In this case:

☞ Let the engine run at idling speed for about 2 minutes

Changing the filter insert

☞ Proceed as follows:

- Switch off the engine
- Open breather filter/cap **B**
- Unscrew cap **E** by about 2 turns and wait for the oil level in the filter housing to drop to the level in the hydraulic oil tank
- Remove cap **E** completely
- Pull out filler pipe **F** with filter element **G**, turning them slightly
- Pull filter element **G** off filler pipe **F** and dispose of the filter element
- Check that flat gasket **H** on the filter cap and O-ring **I** on the filler pipe are in perfect condition
- Fit new O-rings if the old ones are damaged
- Slide filler pipe **F** onto a new filter element **G** and insert the assembly into the filter
- Tighten cap **E** by hand (tightening torque 20 Nm)
- Tighten cap/breather filter **B** by hand
- Carry out a test run of the hydraulic system

With the engine switched off:

- Check the hydraulic oil filter for leakage

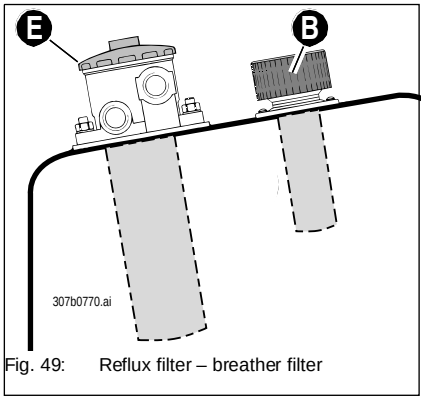

Fig. 49: Reflux filter – breather filter

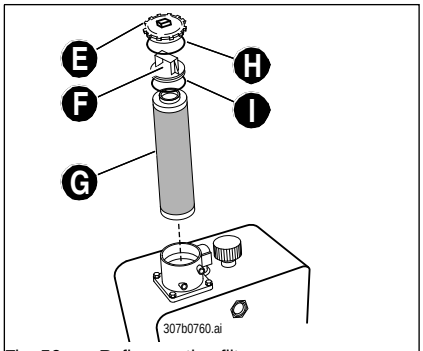

Fig. 50: Reflux suction filter

3.14.7 Replacing the filler and breather filter

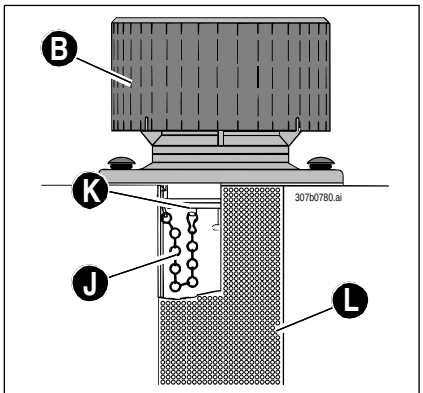

Fig. 51: Securing the filler and breather filter

Replace breather filter **B** for the hydraulic oil tank every 1500 service hours or at least once a year.

☞ Proceed as follows:

- Unscrew breather filter **B**
- Remove retaining chain **J** on lower section **K** of the filter
- Attach retaining chain **J** on lower section **K** of the new breather filter **B**
- Screw in the new breather filter **B**

3.14.8 Checking hydraulic pressure lines

Specific safety instructions

Danger!

Caution when checking hydraulic lines, especially when searching for leaks.
Hydraulic oil escaping under high pressure can penetrate the skin and cause serious injuries.

Danger of personal injury!

☞ *Always consult a doctor immediately, even if the wound seems insignificant – otherwise serious infections could set in!*

☞ *Always observe the following instructions:*

- Retighten leaking screwed fittings and hose connections only when the system is not under pressure; i.e. release the pressure before working on pressurised lines!
- Never weld or solder damaged or leaking pressure lines and screw connections. Replace damaged parts with new ones!
- Never search for leaks with your bare hands, but wear protective gloves!
- Use paper or wood to check for minor leaks. Never use an unprotected light or naked flame!
- Have damaged flexible lines replaced by authorised workshops only!

- Leaks and damaged pressure lines must be immediately repaired or replaced by an authorised workshop or after-sales staff.
  This not only increases the operating safety of your machine but also helps to protect the environment
- Replace hydraulic hoses every 6 years from the date of manufacture, even if they do not seem to be damaged

In this respect, we recommend that you observe all the relevant safety regulations for hydraulic lines, as well as the safety regulations regarding accident prevention and occupational health and safety in your country. Also observe DIN 20066, part 5.

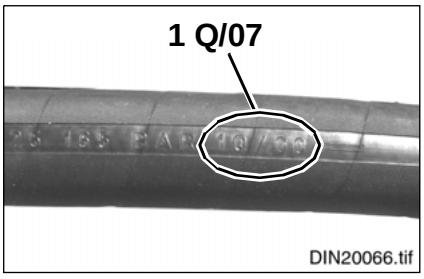

The date of manufacture (month or quarter and year) is indicated on the flexible line.

Example:

The indication "**1 Q/07**" means manufactured in the 1st quarter of 2007.

3.15 Gearboxes and axles

Maintenance of these components is limited to checking the oil levels and to changing the oil at the prescribed intervals.

➥ – see *Maintenance plan (overview)* on page 3-4

Authorised oil types

➥ – see *Fluids and lubricants* on page 3-1.

Important!

Only use new sealing rings for oil filler and drain plugs. Drain oil only after running the machine for a longer period of time!

3.15.1 Rear axle transfer gearbox

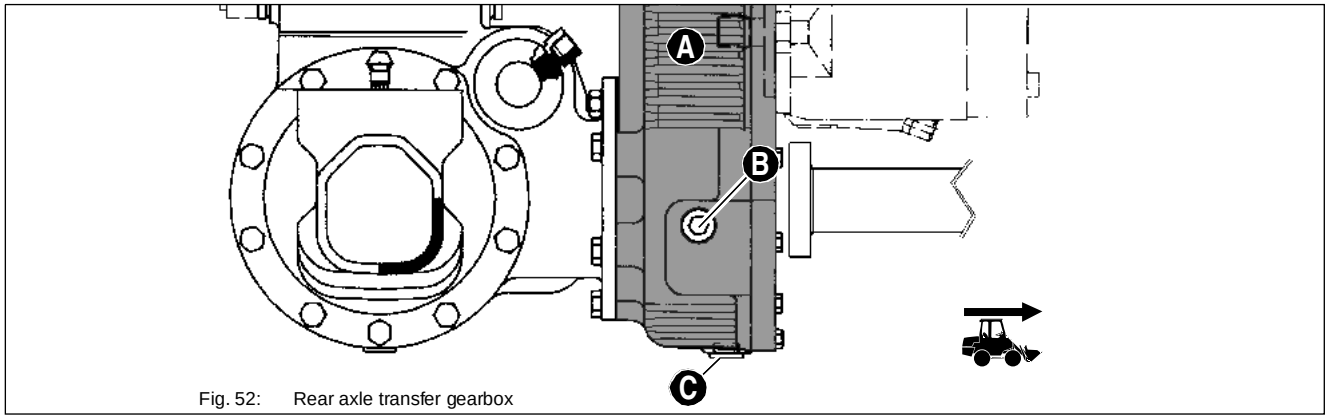

Fig. 52: Rear axle transfer gearbox

Checking the oil level

☞ Proceed as follows:

- Park the machine on level ground when the gearbox is at operating temperature
- Clean and unscrew plug **B** on transfer gearbox **A**

If the oil level is below the opening or if the oil level cannot be seen at all:

- Fill up the oil

If the oil level is correct:

- Tighten plug **B** with a new sealing ring to make an oil-tight seal

Filling up oil

☞ Proceed as follows:

- Park the machine on level ground when the gearbox is at operating temperature
- Clean and unscrew plug **B** on transfer gearbox **A**
- Fill in oil until it runs out of the filler opening

If the oil level in the gearbox remains constant:

- Tighten plug **B** with a new sealing ring to make an oil-tight seal

Changing the oil

Danger!

Draining hot gearbox oil is hazardous –

Danger of burns!

☞ *Wear protective gloves*

☞ *Use suitable tools, e.g. for unscrewing the oil drain plug*

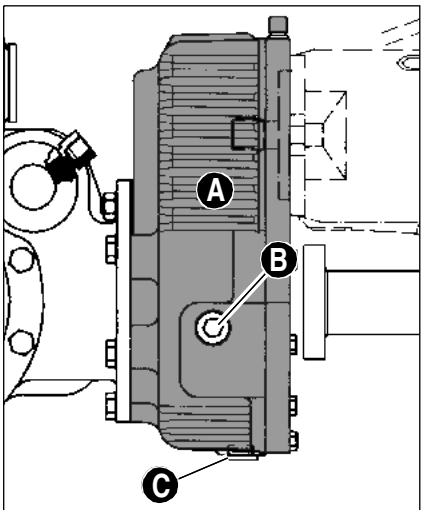

Fig. 53: Rear axle transfer gearbox

☞ Proceed as follows:

- Park the machine on level ground when the gearbox is at operating temperature
- Place a sufficiently large container under the transfer gearbox to collect the oil
- Clean and unscrew plug **B** on transfer gearbox **A**
- Unscrew plug **C** on transfer gearbox **A**
- Completely drain the old gearbox oil
- Tighten plug **C** with a new sealing ring to make an oil-tight seal
- Fill in oil until it runs out of the filler opening

If the oil level in the gearbox remains constant:

- Tighten plug **B** with a new sealing ring to make an oil-tight seal

After carrying out a test run:

- Check the oil level again after about 5 minutes, and fill up if necessary

3.15.2 Front and rear axle differentials

Environment!

Use a suitable container to collect the gearbox oil as it drains and dispose of it in an environmentally friendly manner!

Important!

Only use new sealing rings for oil filler and drain plugs. Drain oil only after running the machine for a longer period of time! Authorised oil types – see chapter 3 *"Fluids and lubricants"* on page 3-1.

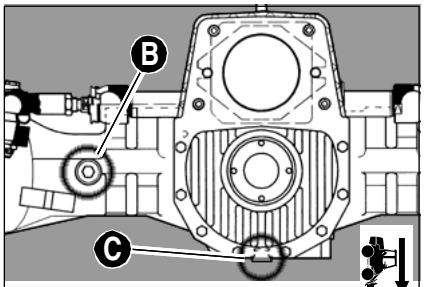

Fig. 54: Checking the oil level on the rea

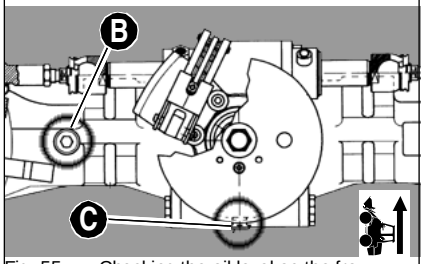

Fig. 55: Checking the oil level on the front axle

Checking the oil level

☞ Proceed as follows:

- Park the machine on level ground
- Clean and unscrew plug **B**

If the oil level is below the opening or if the oil level cannot be seen at all:

- Fill up the oil

If the oil level is correct:

- Tighten plug **B** with a new sealing ring to make an oil-tight seal

Filling up oil

☞ Proceed as follows:

- Park the machine on level ground
- Clean and unscrew plug **B**
- Fill in oil until it runs out of the filler opening
- Tighten plug **B** with a new sealing ring to make an oil-tight seal

Changing the oil

☞ Proceed as follows:

- Park the machine on level ground when it is at operating temperature
- Place a container under plug **C** to collect the oil
- Clean and unscrew plug **B**
- Clean and unscrew plug **C**
- Completely drain the old oil
- Tighten plug **C** with a new sealing ring to make an oil-tight seal
- Fill in oil until it runs out of the filler opening
- Tighten plug **B** with a new sealing ring to make an oil-tight seal

3.15.3 Lubricating the rear axle oscillation-type bearing

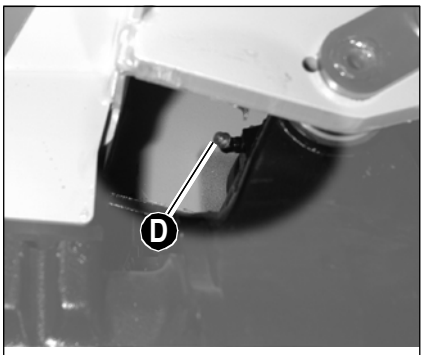

Fig. 56: Grease nipples for oscillation-type bearing

Important!

The machine has an oscillation-type rear axle. Grease the bearing at the latest after every 50 service hours or once a week.

☞ Grease the oscillation-type bearing on grease nipple **D** with lithium-saponified multi-purpose grease – see chapter 3 *"Fluids and lubricants"* on page 3-1

3.15.4 Front and rear axle planetary drives

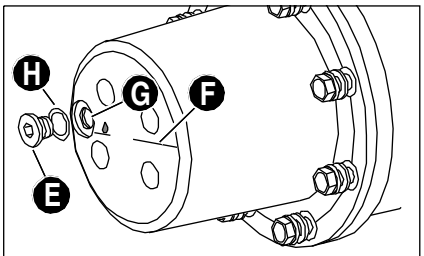

Fig. 57: Checking the oil level in the planetary drive

Checking the oil level

☞ Proceed as follows:

- Park the machine on level ground
- Turn plug **E** and oil level mark **F** to a horizontal position
- Clean and unscrew plug **E**

If the oil level is below opening **G** or if the oil level cannot be seen at all:

- Fill up the oil
- Tighten plug **E** with a new sealing ring **H** to make an oil-tight seal

Filling up oil

☞ Proceed as follows:

- Park the machine on level ground
- Turn plug **E** and oil level mark **F** to a horizontal position
- Clean and unscrew plug **E**
- Fill in fresh oil up to oil level mark **F** (overflow)
- Tighten plug **E** with a new sealing ring **H** to make an oil-tight seal

Changing the oil

☞ Proceed as follows:

- Park the machine on level ground when it is at operating temperature
- Place a container to collect the fuel
- Turn plug **E** to the topmost position
- Clean and unscrew plug **E**
- Turn plug **E** to the lowest position
- Completely drain the old oil
- Turn plug **E** and oil level mark **F** to a horizontal position
- Fill in fresh oil up to oil level mark **F** (overflow)

Tighten plug **E** with a new sealing ring **H** to make an oil-tight seal

3.16 Lubricating the loader unit

Lubricate the following lubrication points on the loader unit:

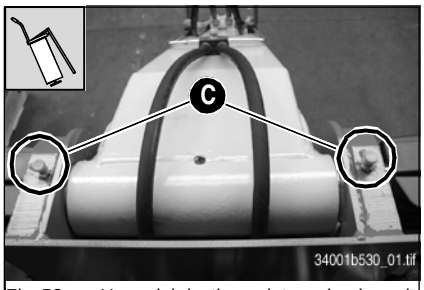

Fig. 58: Upper lubrication points on loader unit

☞ Lubricate grease nipples **C** (2 x) on the loader unit bearing **every 50 service hours** (or once a week). Lubricate more frequently when in heavy-duty operation (once a day)

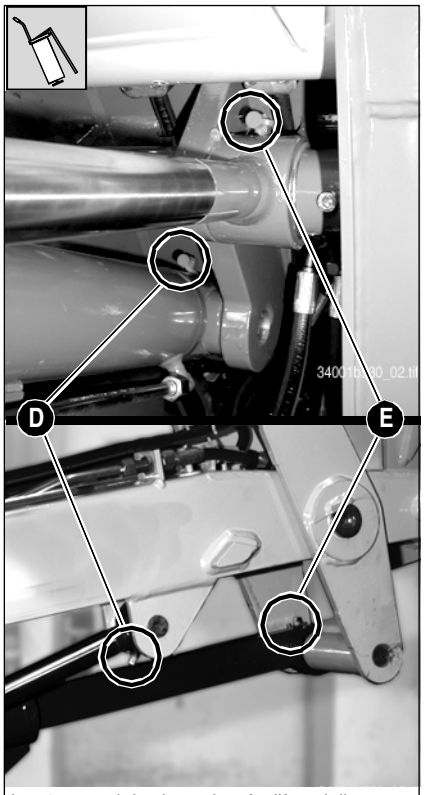

Fig. 59: Lubrication points for lift and tilt ram bearings

☞ Lubricate grease nipples **D** (2 x) on the lift ram bearing **every 50 service hours** (or once a week). Lubricate more frequently when in heavy-duty operation (once a day)

☞ Lubricate grease nipples **E** (2 x) on the tilt ram bearing with grease **every 50 service hours** (or once a week). Lubricate more frequently when in heavy-duty operation (once a day)

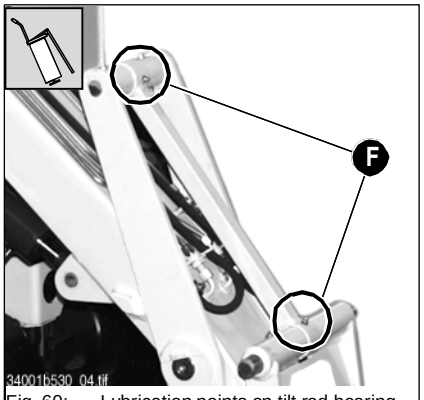

Fig. 60: Lubrication points on tilt rod bearing

☞ Lubricate grease nipples **F** (2 x) on the tilt rod bearing **every 50 service hours** (or once a week). Lubricate more frequently when in heavy-duty operation (once a day)

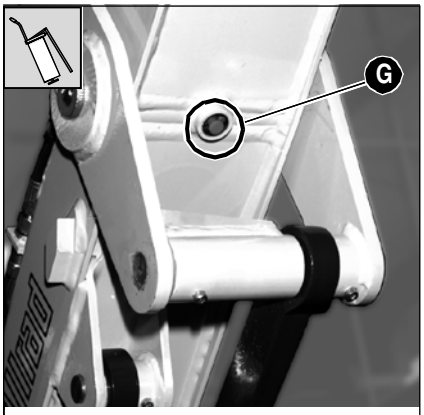

Fig. 61: Lubrication points on tilt lever bearing

☞ Lubricate grease nipple **G** (1 x) on the tilt lever bearing **every 50 service hours** (or once a week). Lubricate more frequently when in heavy-duty operation (once a day)

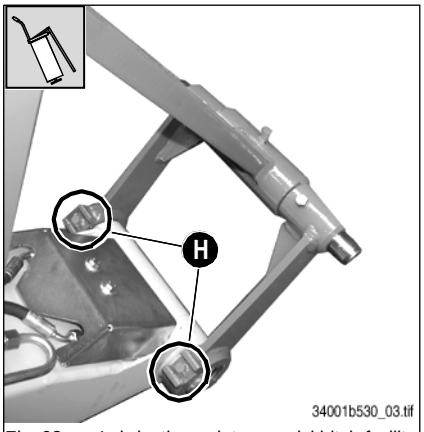

Fig. 62: Lubrication points on quickhitch facility

☞ Lubricate grease nipples **H** (2 x) on the quickhitch bearing **every 50 service hours** (or once a week). Lubricate more frequently when in heavy-duty operation (once a day)

3.17 Tyre care

Danger!

Improper tyre repairs –

Danger of accidents!

☞ *All repair work on tyres and rims may only be carried out by authorised workshops*

Important!

Regular inspection of the tyres

- Improves operating safety
- Increases the service life of the tyres
- Reduces machine downtimes

Refer to the table in chapter “Specifications” on page TD-1 for the authorised tyre types and the correct tyre pressures. Machines are also delivered ex works with a tyre table sticker on the front window or on the loader unit bulkhead.

3.17.1 Tyre check

Daily checks

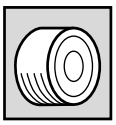

☞ Carry out the following maintenance work once a day:

- Check tyre pressure
- Check tyres and rims for damage (cracks, ageing etc.) – also on the inside
- Remove foreign bodies from the tyre tread
- Remove traces of oil and grease from the tyres

Weekly checks

☞ Carry out the following maintenance work once a week:

- Check tyres for wear and measure tread depth

3.18 Wheel change

Danger!

Use of wrong tyres or wheels –

Danger of accidents!

☞ *Use only wheels and tyres authorised for your machine* – see chapter TD *"Tyres for model 341-01 / 341-02" on page TD-16*

☞ *Check the wheel nuts for tightness after every wheel or tyre change*

Caution!

The wheels are heavy and can damage the threads on the wheel studs if they are handled incorrectly!

☞ *Use suitable assembly tools, such as covering sleeves for the studs, a jack etc.*

3.18.1 Removing the wheels

☞ Proceed as follows:

- Park the machine on level and firm ground and prevent it from rolling away
- Slightly loosen the wheel nuts of the wheel you want to remove
- Place a jack under the axle beam, making sure it is standing firmly
- Raise the side of the axle from which you want to remove the wheel
- Check the machine is standing firmly
- Completely remove the wheel nuts
- Remove the wheel

3.18.2 Fitting the wheels

☞ Proceed as follows:

- Place the wheel onto the wheel studs
- Tighten all wheel nuts part-way
- Lower the raised axle
- Tighten the wheel nuts to the prescribed tightening torque – see chapter TD *"Specific tightening torques"* on page TD-19

3.19 Electric system

3.19.1 Specific safety instructions



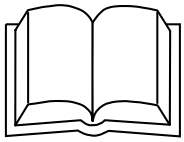

- The battery contains sulphuric acid! This acid must not be allowed to come into contact with the skin, the eyes, clothing or the machine.

  Therefore when recharging or working near the battery:

  ☞Always wear goggles and protective clothing with long sleeves

If acid is spilt:

☞Thoroughly rinse all affected surfaces immediately with plenty of water

☞Thoroughly wash any part of the body touched by the acid immediately with plenty of water and seek medical attention at once!

- Especially when charging batteries, as well as during normal operation of batteries, an oxyhydrogen mixture is formed in the battery cells – danger of explosion!
- Do not attempt to jump-start the machine if the battery is frozen or if the acid level is low. The battery may rupture or explode!
- Avoid naked flames and sparks and do not smoke in the vicinity of open battery cells – otherwise the gas produced during normal battery operation may ignite!
- Use only 12 V power sources. Higher voltages will damage the electric components
- When connecting the battery leads, make sure the poles +/– are not inverted, otherwise sensitive electric components will be damaged
- Do not interrupt voltage-carrying circuits at the battery terminals because of the danger of sparking!
- Never place tools or other conductive articles on the battery – danger of short circuit!
- Disconnect the negative (**–**) battery terminal from the battery before starting repair work on the electric system
- Dispose of used batteries properly

3.19.2 Service and maintenance work at regular intervals

Before driving the machine



☞Check every time before driving the machine:

- Is the light system OK?
- Is the signalling and warning system OK?

Every week

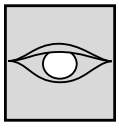

☞Check once a week:

- Electric fuses
  – see chapter TD *"Fuse box in control lever base"* on page TD-13
- Cable and earth connections
- Charge condition of battery – See *Battery* on page 3-35.
- Condition of battery terminals

3.19.3 Cables, bulbs and fuses

Always observe the following instructions:

- Defective components of the electric system must always be replaced by an authorised expert. Bulbs and fuses may be changed by unqualified persons
- When carrying out maintenance work on the electric system, pay particular attention to ensuring good contact in leads and fuses
- Blown fuses indicate overloading or short circuits. The electric system must therefore be checked before installing the new fuse
- Only use fuses with the specified load capacity (amperage) – see chapter TD *"Fuse box in control lever base"* on page TD-13

3.19.4 Alternator

Always observe the following instructions:

- Only test run the engine with the battery connected
- When connecting the battery, make sure the poles (+/–) are not inverted
- Always disconnect the battery before carrying out welding work or connecting a quick battery charger
- Replace defective charge telltales immediately

3.19.5 Battery

Danger!

Battery acid is highly caustic!

Danger of caustic injury!

Therefore when recharging and/or working near the battery:

☞ *Always wear goggles and protective clothing with long sleeves*

If acid is spilt:

☞ *Thoroughly rinse all affected surfaces immediately with plenty of water*

☞ *Thoroughly wash any part of the body touched by the acid immediately with plenty of water and seek medical attention at once!*

Especially when charging batteries, as well as during normal operation of batteries, an oxyhydrogen mixture is formed in the battery cells –

Danger of explosion!

☞ *Avoid naked lights and sparks in the vicinity of the battery and do not smoke!*

☞ *Do not attempt to jump-start the machine if the battery is frozen or if the acid level is low. The battery may rupture or explode!*

☞ *Always disconnect the negative terminal (–) from the battery before starting repair work on the electric system!*

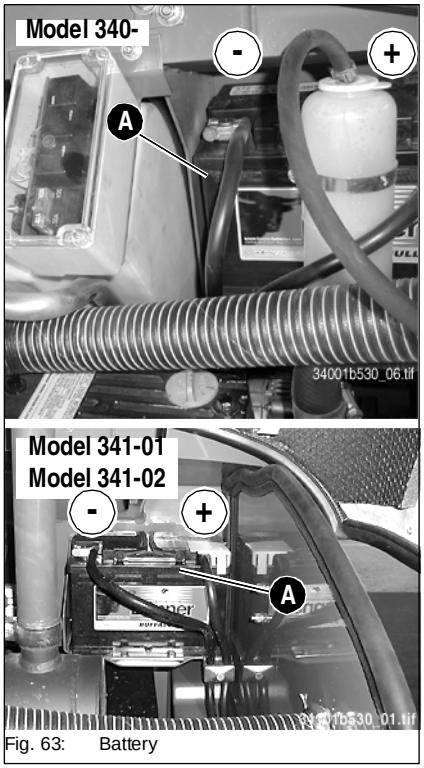

Fig. 63: Battery

Battery **A** is located in the engine compartment, on the right in driving direction. The battery is low in maintenance and no fluid needs to be refilled under normal operating conditions. However have the battery checked at regular intervals to make sure the electrolyte level is between the MIN and MAX marks.

Checking the battery requires it to be removed and must be carried out by an authorised workshop.

Always follow the specific battery safety instructions!

Important!

As an option, the machine can be fitted with a battery master switch.

3.20 General maintenance work

3.20.1 Specific safety instructions

Cleaning the machine is divided into 3 separate areas:

- Inside the cab
- Exterior of the machine
- Engine compartment

The wrong choice of cleaning equipment and agents may impair the operating safety of the machine on the one hand, and on the other undermine the health of the persons in charge of cleaning the machine. It is therefore essential to observe the following instructions.

3.20.2 When using washing solvents

- Ensure adequate room ventilation
- Wear suitable protective clothing
- Do not use flammable liquids, such as petrol or diesel

3.20.3 When using compressed air

- Work carefully
- Wear goggles and protective clothing
- Do not aim the compressed air at the skin or at other people
- Do not use compressed air for cleaning your clothing

3.20.4 When using a high-pressure cleaner or steam jet

- Electric components and damping material must be covered and not directly exposed to the jet
- Cover the vent filter on the hydraulic oil tank and the filler caps for fuel, hydraulic oil etc.
- Protect the following components from moisture:
  - Engine
  - Electric components such as the alternator etc.
  - Control devices and seals
  - Air intake filters etc.

3.20.5 When using volatile and easily flammable anticorrosion agents and sprays:

- Ensure adequate room ventilation
- Do not use unprotected lights or naked flames
- Do not smoke!

3.20.6 Inside the cab

Caution!

Never use high-pressure cleaners, steam jets or high-pressure water to clean inside the cab. Water under high pressure may

- penetrate into the electric system and cause short circuits and
- damage seals and disable the controls!

We recommend using the following aids to clean the cab:

- Broom
- Vacuum cleaner
- Damp cloth
- Bristle brush
- Water with mild soap solution

Cleaning the seat belt:

- Clean the seat belt (which remains fitted in the machine) only with a mild soap solution; do not use chemical agents as they may destroy the fabric!

Danger!

In the case of automatic seat belts (option) soiled belts may affect and impair winding –

Danger of personal injury!

☞ *Only wind the seat belt when it is dry!*

3.20.7 Exterior of the machine

The following articles are generally suitable:

- High-pressure cleaner
- Steam jet

3.20.8 Cleaning the engine compartment

Danger!

Clean the engine at engine standstill only –

Danger of personal injury!

☞ *Switch off the engine before cleaning*

Caution!

When cleaning the engine with a water or steam jet

☞ *The engine must be cold*

☞ *and do not point the jet directly at electric sensors such as the oil pressure switch.*

The humidity penetrating any such sensors causes them to fail and leads to engine damage!

3.20.9 Screw connections

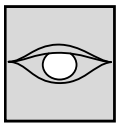

All screw connections must be checked regularly, even if they are not listed in the maintenance plans.

Tighten loose connections immediately. Refer to chapter “Specifications” for the tightening torques.

3.20.10 Pivots and hinges



All mechanical pivot points on the machine (e.g. door hinges, joints) and fittings (e.g. door arresters) must be lubricated regularly, even if they are not listed in the lubrication plan.

Engine

4 Engine

4.1 Specifications

Engine	Model 340-01	Model 341-01/341-02
Product	Yanmar diesel engine	
Type	3TNE 88	4TNE 88
Design	Water-cooled 4 stroke diesel engine	
No. of cylinders[1]	3	4
Displacement	1642 cm³	2190 cm³
Displacement, compression	28 – 35 bar	
Nominal bore and stroke	88 x 90 mm	88 x 90 mm
Output	23.5 kW at 2600 rpm	28.8 kW at 2400 rpm
Max. torque	99 –107 Nm at 1400 rpm	132 –143 Nm at 1600 rpm
Max. engine speed without load	2810 +/- 50 rpm	2590 +/- 50 rpm
Idling speed	1050 +/- 25 rpm	1050 +/- 25 rpm
Oil temperature	120 °C max. (at 40 °C outside temperature)	
Engine oil pressure at max. revs	4.0 bar +/- 0.5 bar	
Engine oil consumption	0.1 – 0.6 g per kW/h	
Valve tip clearance (intake-exhaust)	0.2 mm	
Max. inclined position (engine no longer supplied with oil):	25° in all directions Observe tilting limit (20° lateral) of the machine!	
Specific fuel consumption	245 g/kW	238 g/kW
Fuel injection system	Direct injection	Direct injection
Firing order	1 – 3 – 2	1 – 3 – 4 – 2
Injection pressure (fuel nozzles)[2]	220 – 230 bar	
Starting aid	Glow plug (preheating time 10 – 15 seconds)	
Cooling-water temperature	max. 105 °C	
Radiator cap	0.9 bar pre-tension	
Coolant thermostat[3]	72 – 83 °C	
Exhaust values according to	97/68 EC	

1. 1st cylinder on flywheel side
2. Nozzles set with spacers (0.1 mm = about 20 bar)
3. Do not run the engine without thermostat

4.2 Description of engine type label

The type label is located on the cylinder-head cover of the engine

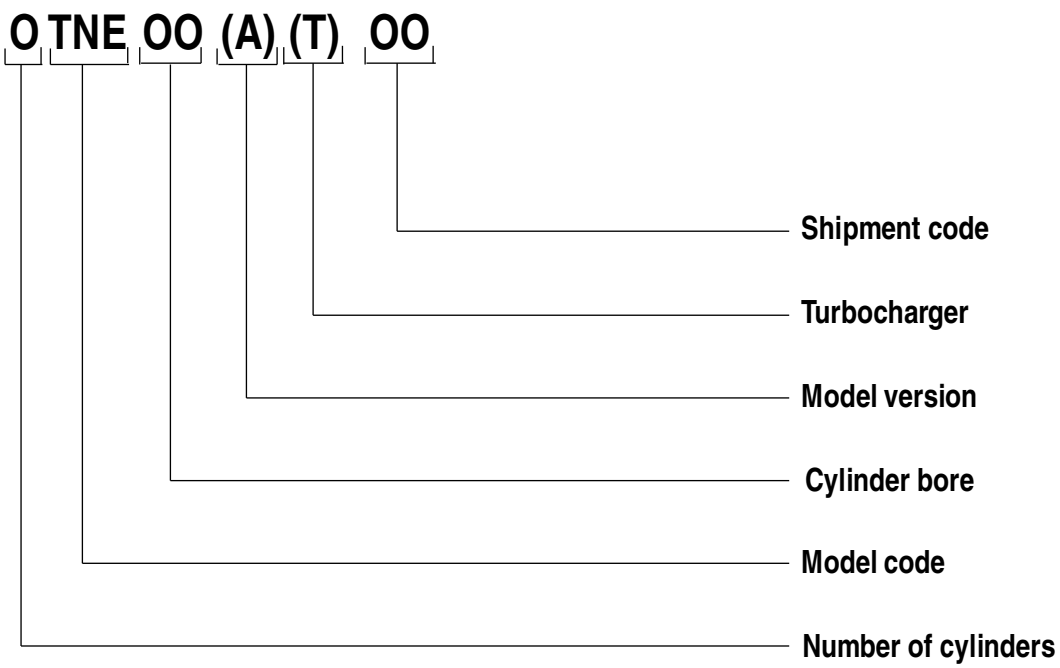

Example: Kramer wheel loader 340-01 (180)

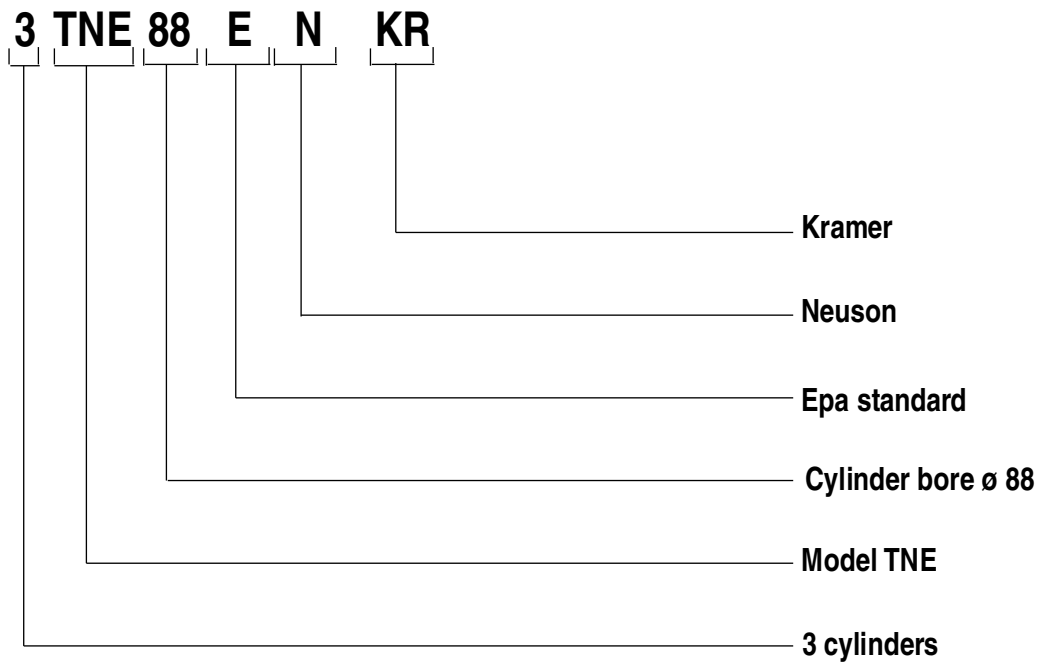

4.3 Engine overview (forwards driving direction)

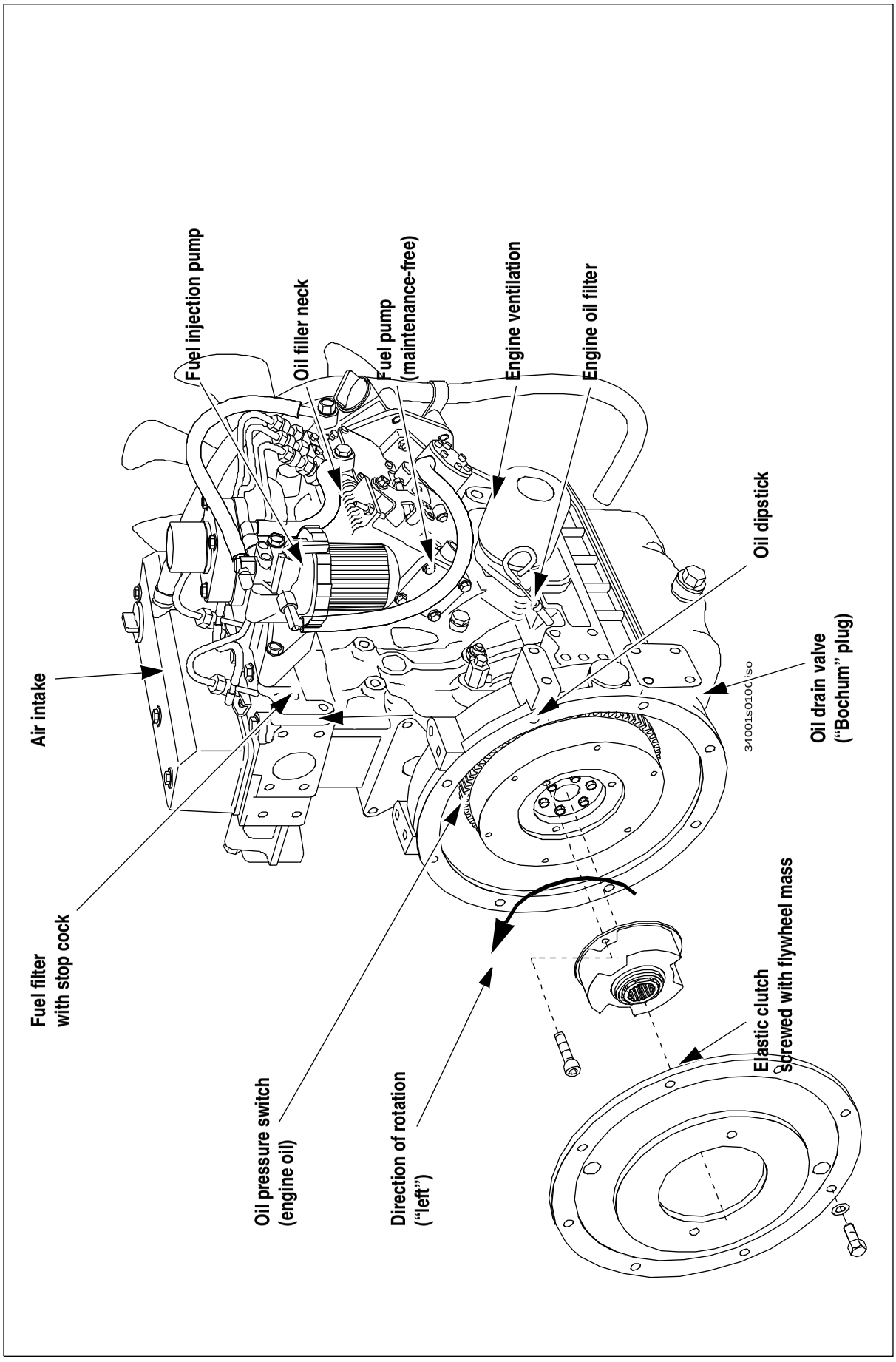

4.4 Engine overview (reverse driving direction)

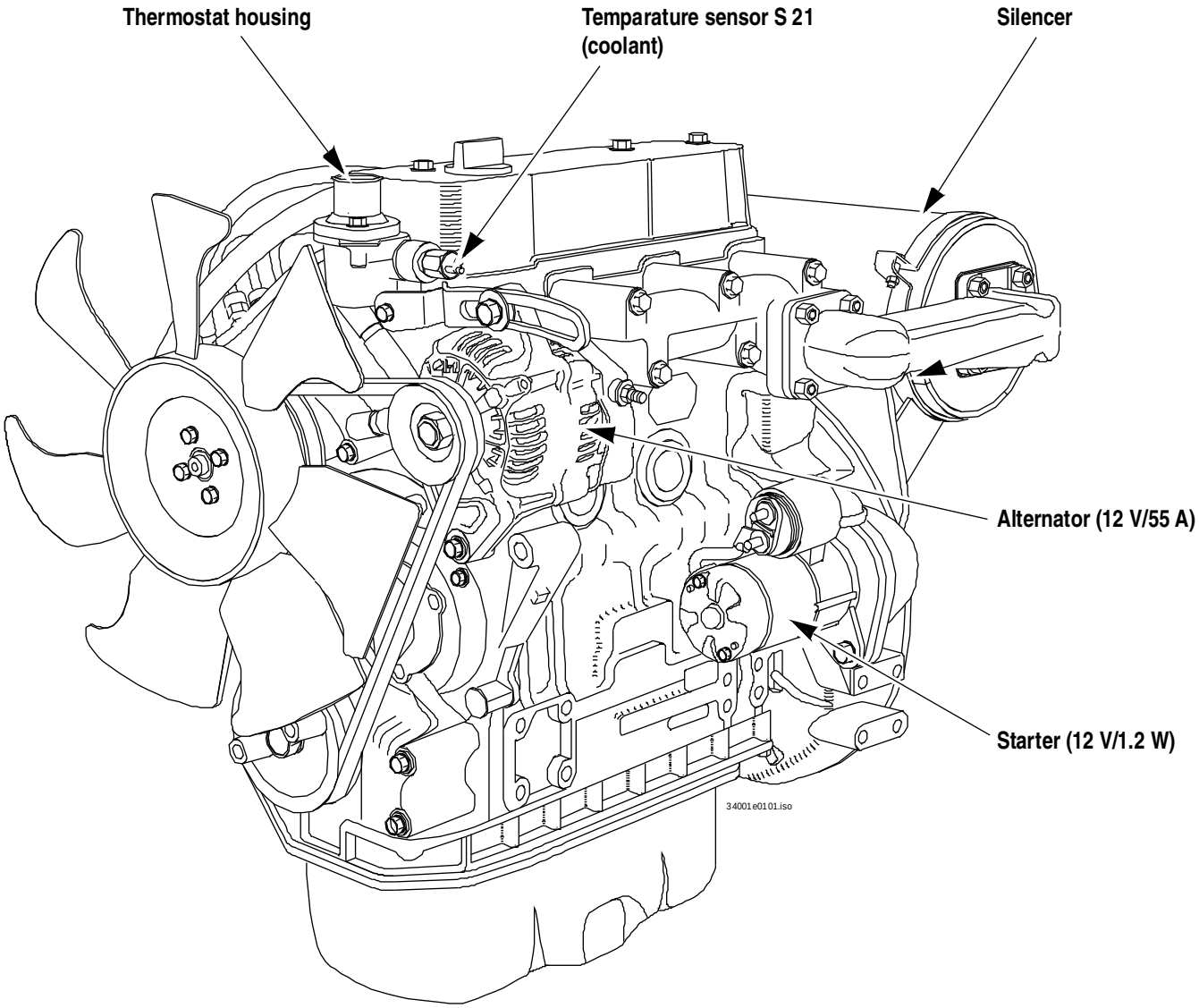

4.5 Fuel injection system

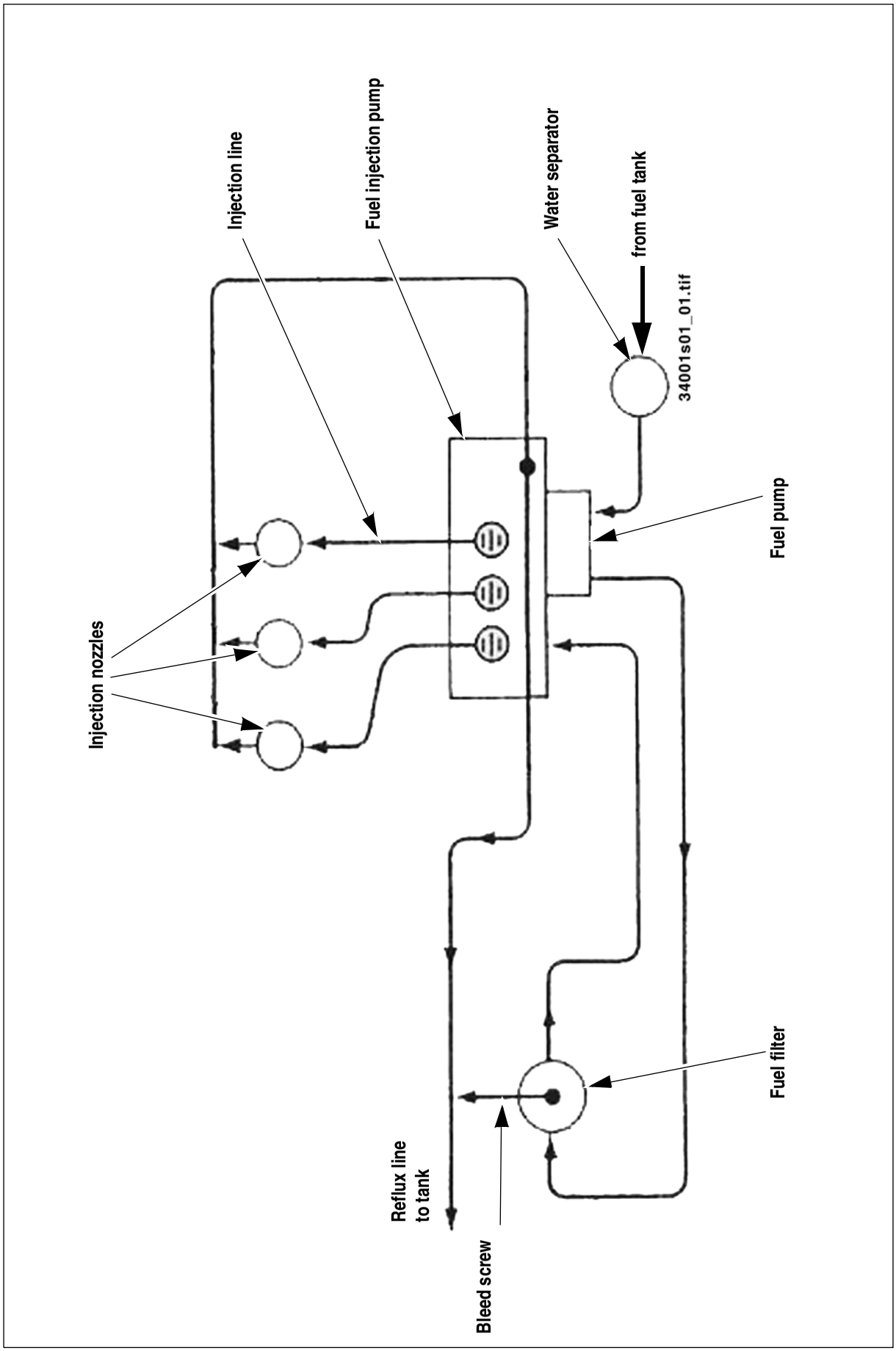

4.6 Fuel injection nozzle

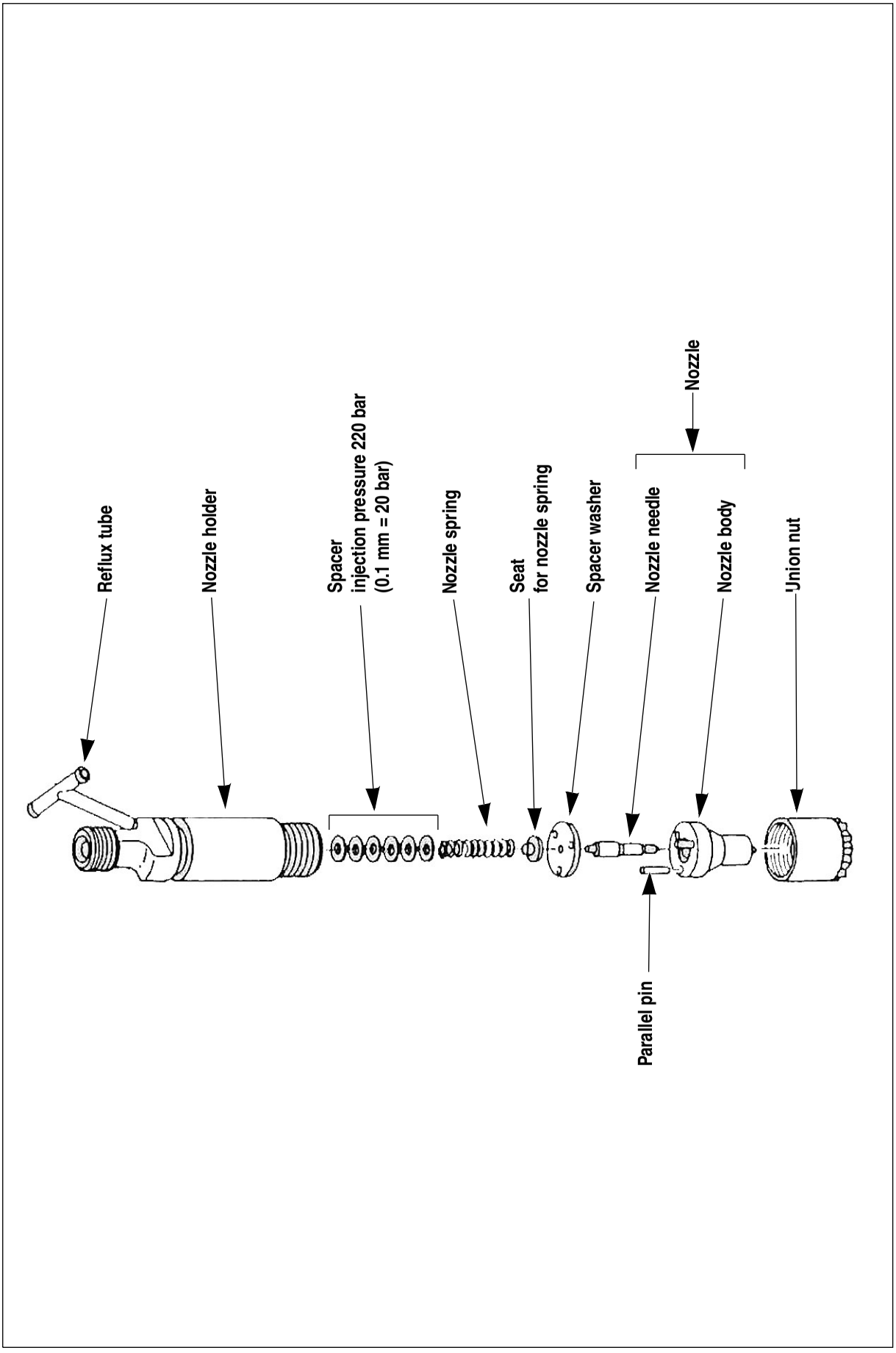

4.7 Engine valve tip clearance

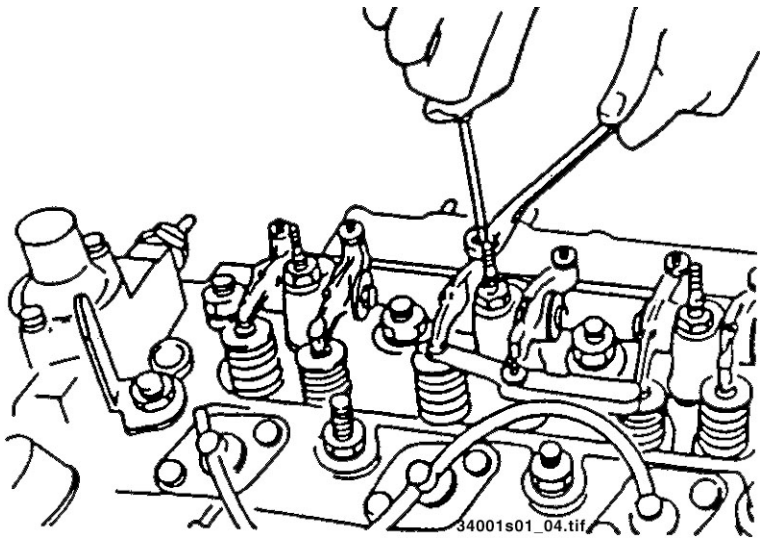

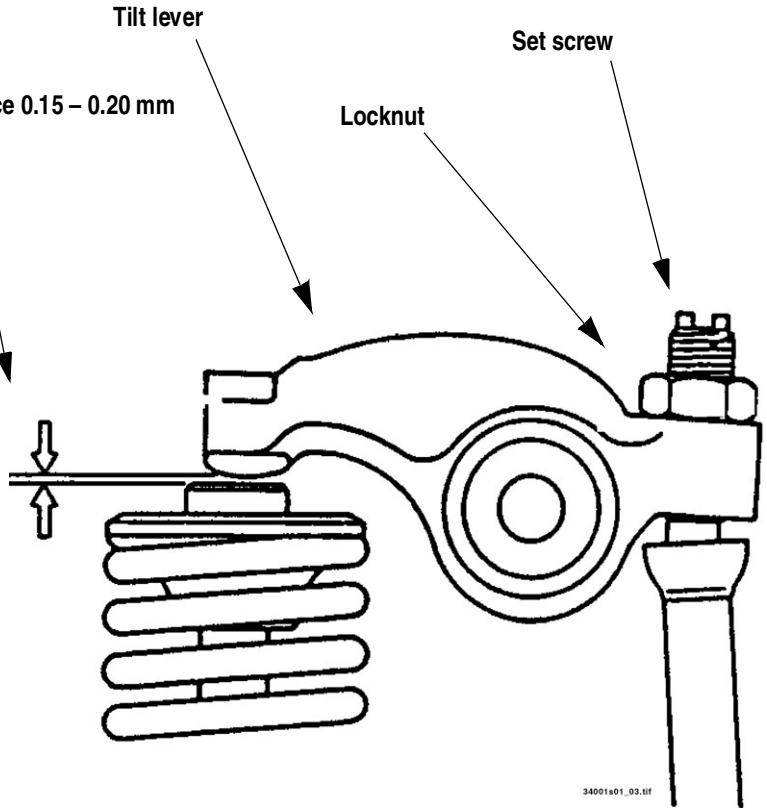

Firing order 1 – 3 – 2 – 1 for model 340-01 (180)

Firing order 1 – 3 – 4 – 2 – 1 for model 341-01 (280)

4.8 Engine cooling: overview

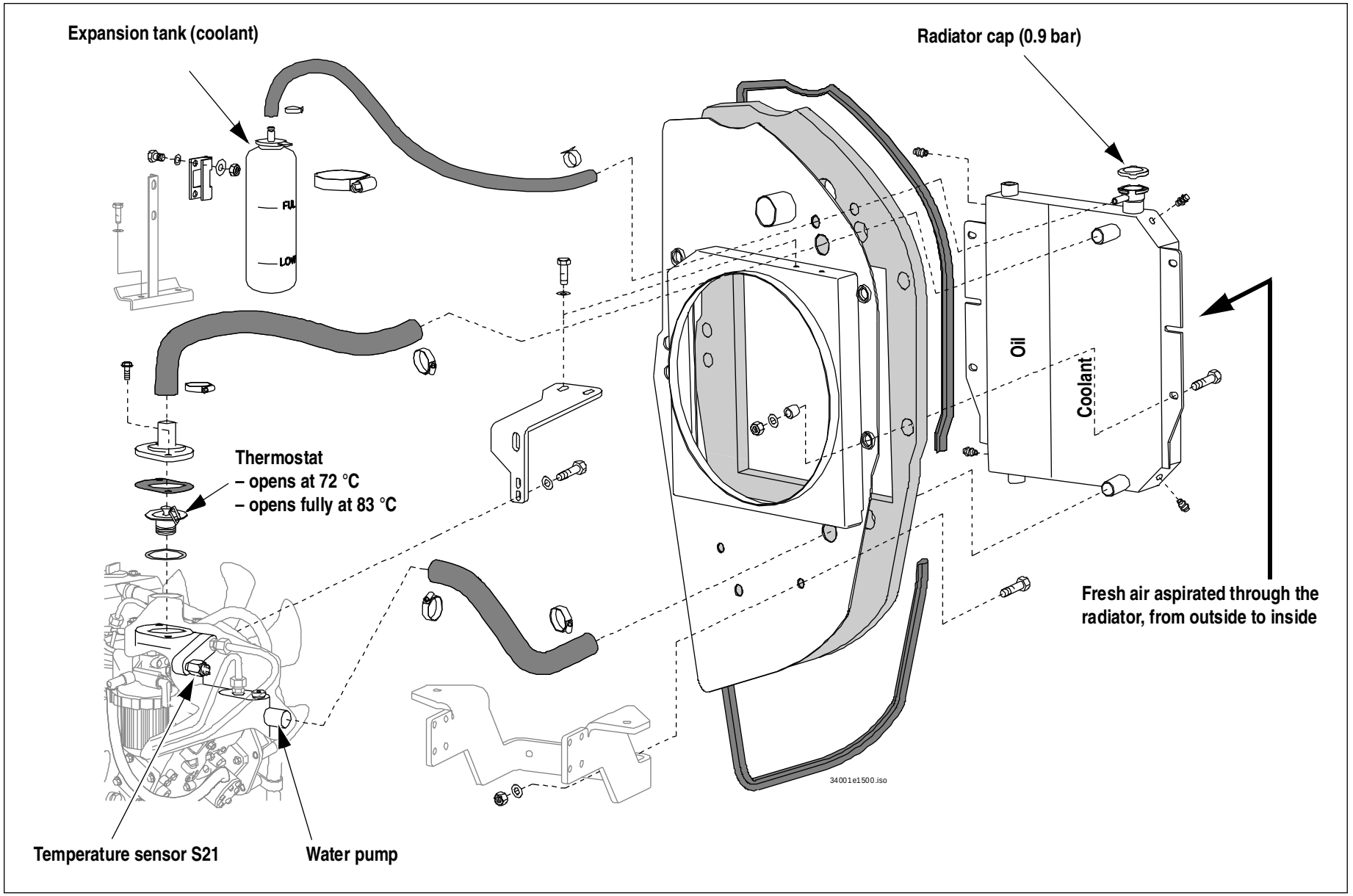

4.9 Fuel system: overview

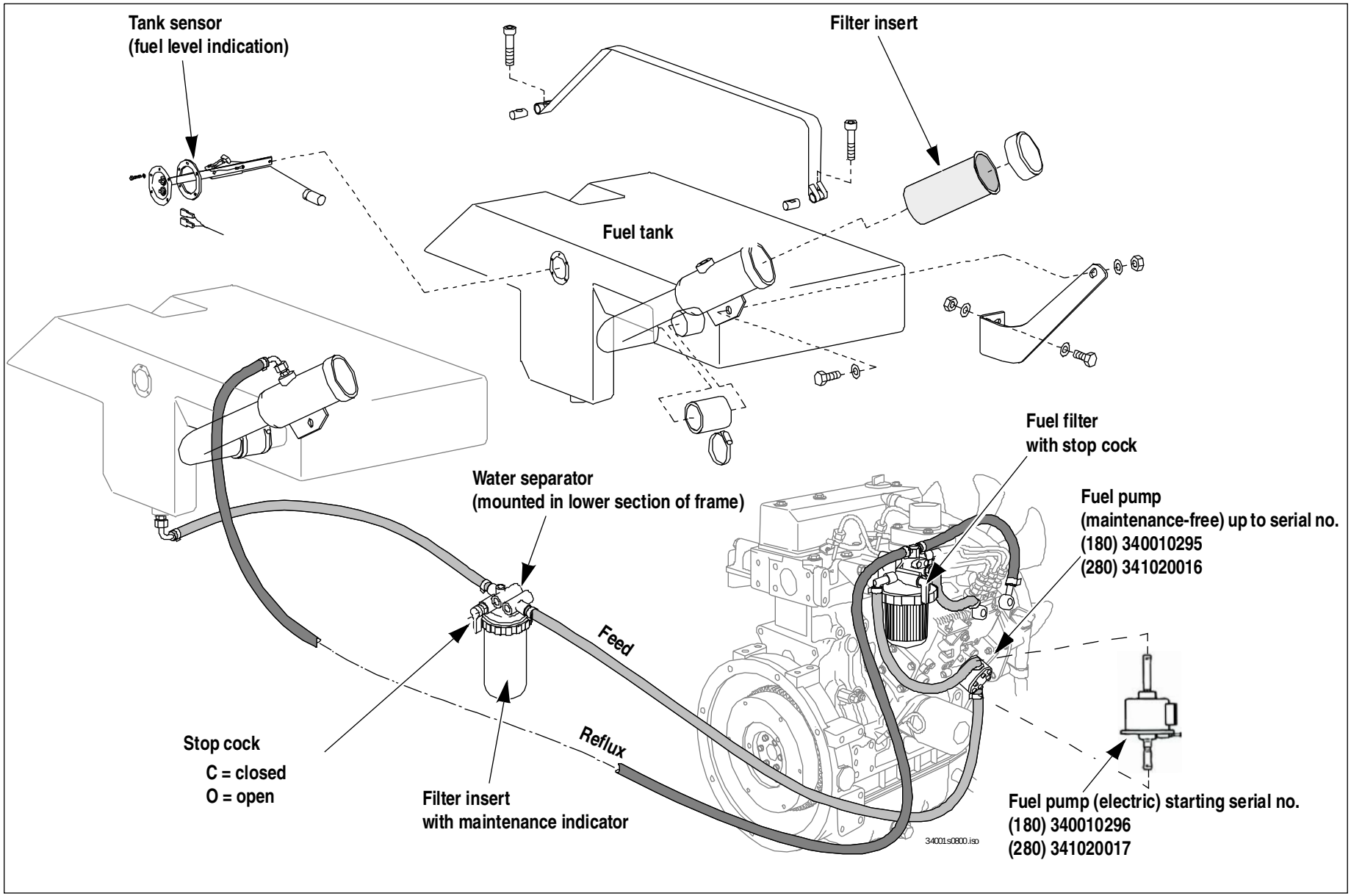

4.10 Heating circuit: engine – cab

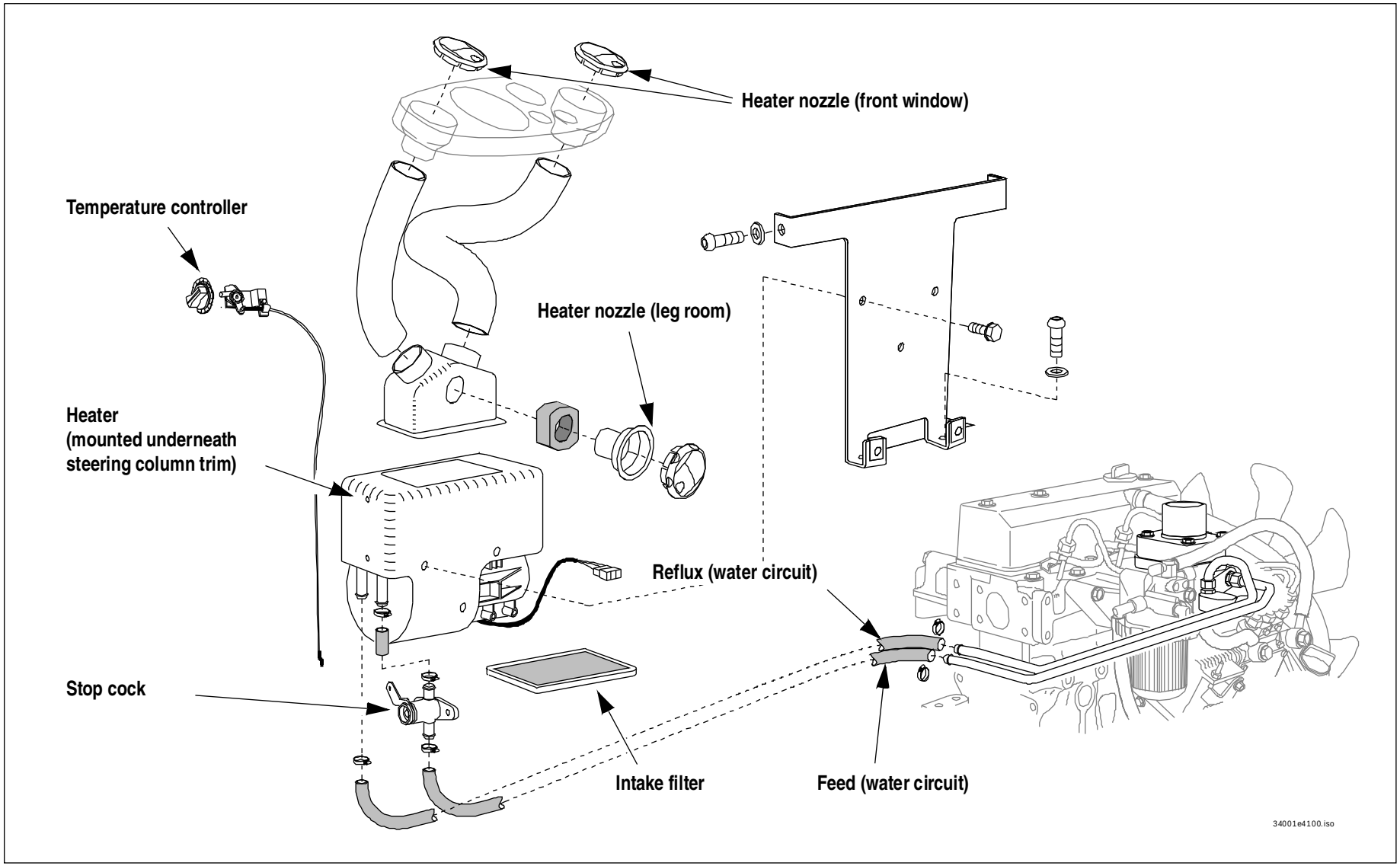

4.11 Engine trouble

Problem	Possible causes
Engine does not start or is not easy to start	Steering-column control lever not in neutral
	Engine starting temperature too low
	Wrong SAE grade of engine lubrication oil
	Fuel grade does not comply with specifications
	Defective or flat battery
	Loose or oxidised cable connections in starter circuit
	Defective starter, or pinion does not engage
	Wrong valve tip clearance
	Defective fuel injector
Engine starts, but does not run smoothly or faultless	Fuel grade does not comply with specifications
	Wrong valve tip clearance
	Injection line leaks
	Defective fuel injector
Engine overheats. Temperature warning system responds	Oil level too low
	Oil level too high
	Dirty air filter
	Defective air filter maintenance switch or gauge
	Dirty oil cooler fins
	Defective fan, torn or loose V-belt
	Cooling air heats up
	Resistance in cooling system too high, flow capacity too low
	Defective fuel injector
Insufficient engine output	Oil level too high
	Fuel grade does not comply with specifications
	Dirty air filter
	Defective air filter maintenance switch or gauge
	Wrong valve tip clearance
	Injection line leaks
	Defective fuel injector
Engine does not run on all cylinders	Injection line leaks
	Defective fuel injector
Insufficient or no engine oil pressure	Oil level too low
	Engine inclination too high
	Wrong SAE grade of engine lubrication oil
Engine oil consumption too high	Oil level too high
	Engine inclination too high

Problem		Possible causes
Engine smoke	Blue	Oil level too high
		Engine inclination too high
	White	Engine starting temperature too low
		Fuel grade does not comply with specifications
		Wrong valve tip clearance
		Defective fuel injector
	Black	Dirty air filter
		Defective air filter maintenance switch or gauge
		Wrong valve tip clearance
		Defective fuel injector

Notes:

Power train

5 Power train

5.1 Variable displacement pump A 10 VG 28 DA: description

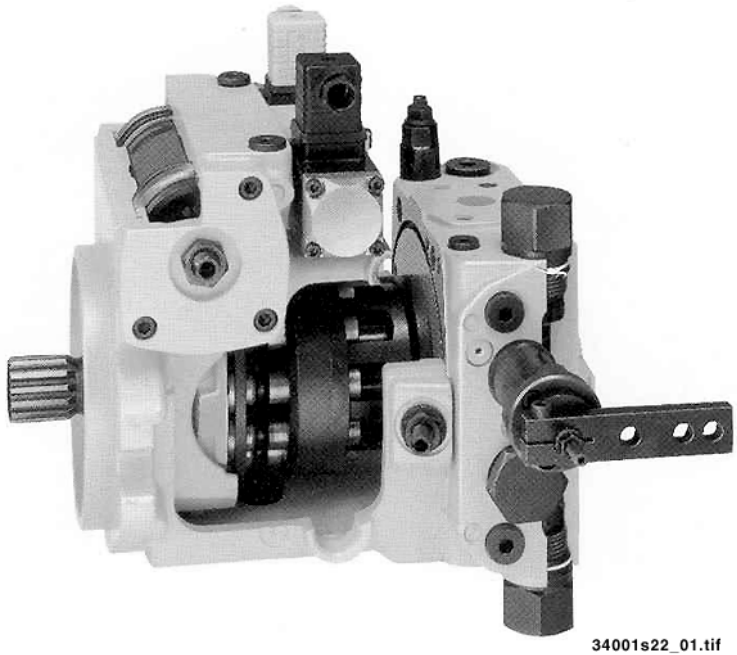

34001s22_01.tif

Example:

Variable displacement pump with electrico-hydraulic adjustment, speed-sensitive control and integrated auxiliary pump

Description:

- **A 10 VG**
  ➥Axial-piston machine, adjustable swash plate design, closed circuit
- **28**
  ➥Max. displacement volume Vg in cm^3
- **DA**
  ➥Hydraulic adjustment, speed-sensitive

The A10VG pump is a variable displacement pump of axial-piston swash plate design. Volume flow can be proportionally and continuously adjusted to drive revs and to displacement volume. As deflection increases, so does volume flow from 0 to maximum value. Feed flow changes as the swash plate moves through the zero position, i.e. flow direction changes.

The pump is equipped with two pressure relief valves, pressure cutoff, control cartridge with integrated inching valve, feed pressure valve and forwards/reverse solenoid.

5.2 Hydraulic motor VM 45 EZ 6: description

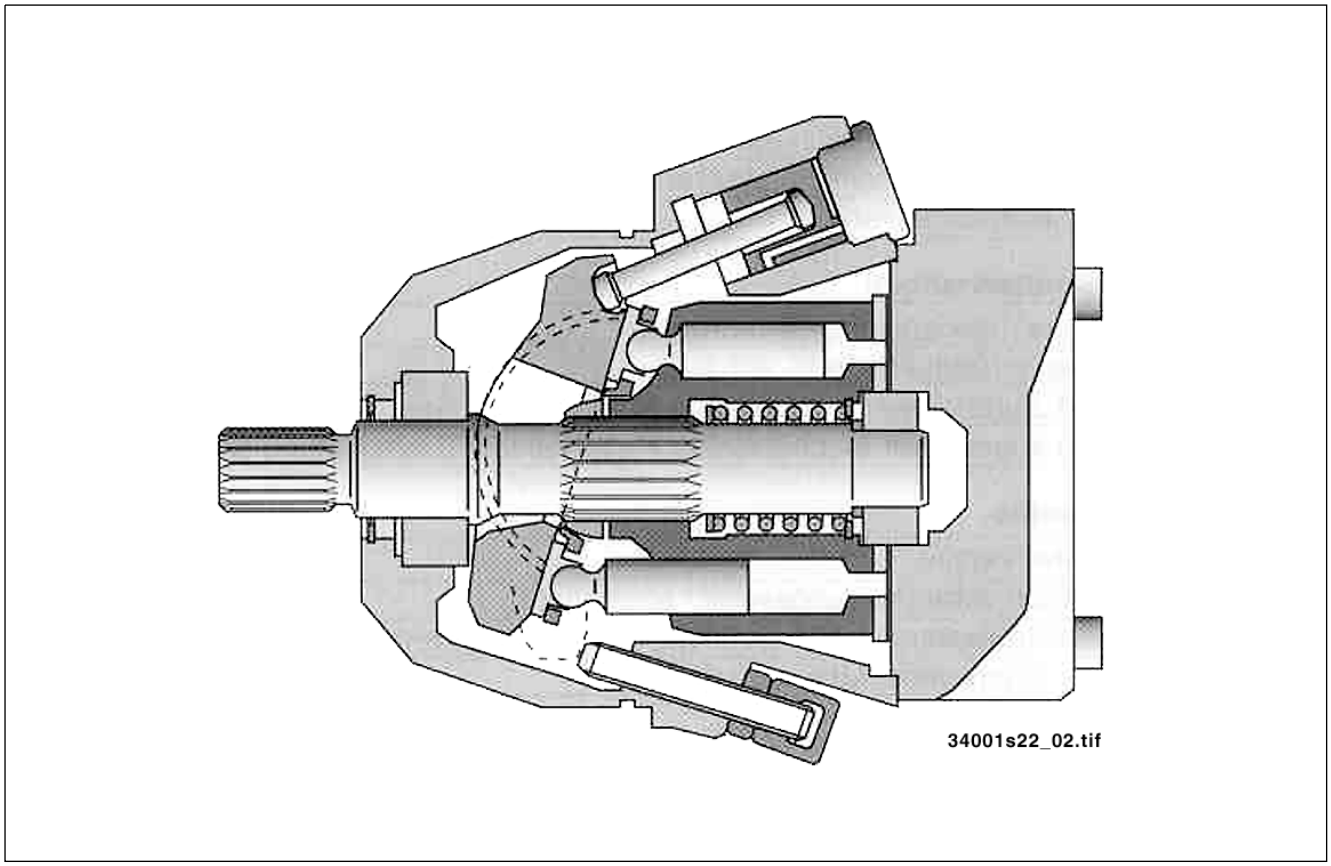

Description:

- **A10 VM**
  ➥ Axial-piston machine, swash plate design, adjustable motor
- **45**
  ➥ Series code
- **EZ**
  ➥ Two-point adjustment, electric with switching magnet

The A10VM hydraulic motor is an axial-piston motor of swash plate design. Output revs are proportional to the inflowing volume of liquid. Capacity changes as the tilting angle is changed. The changeover valve supplies the control piston with setting pressure in order to switch capacity from “Q max to Q min”.

5.3 Variable displacement pump: overview

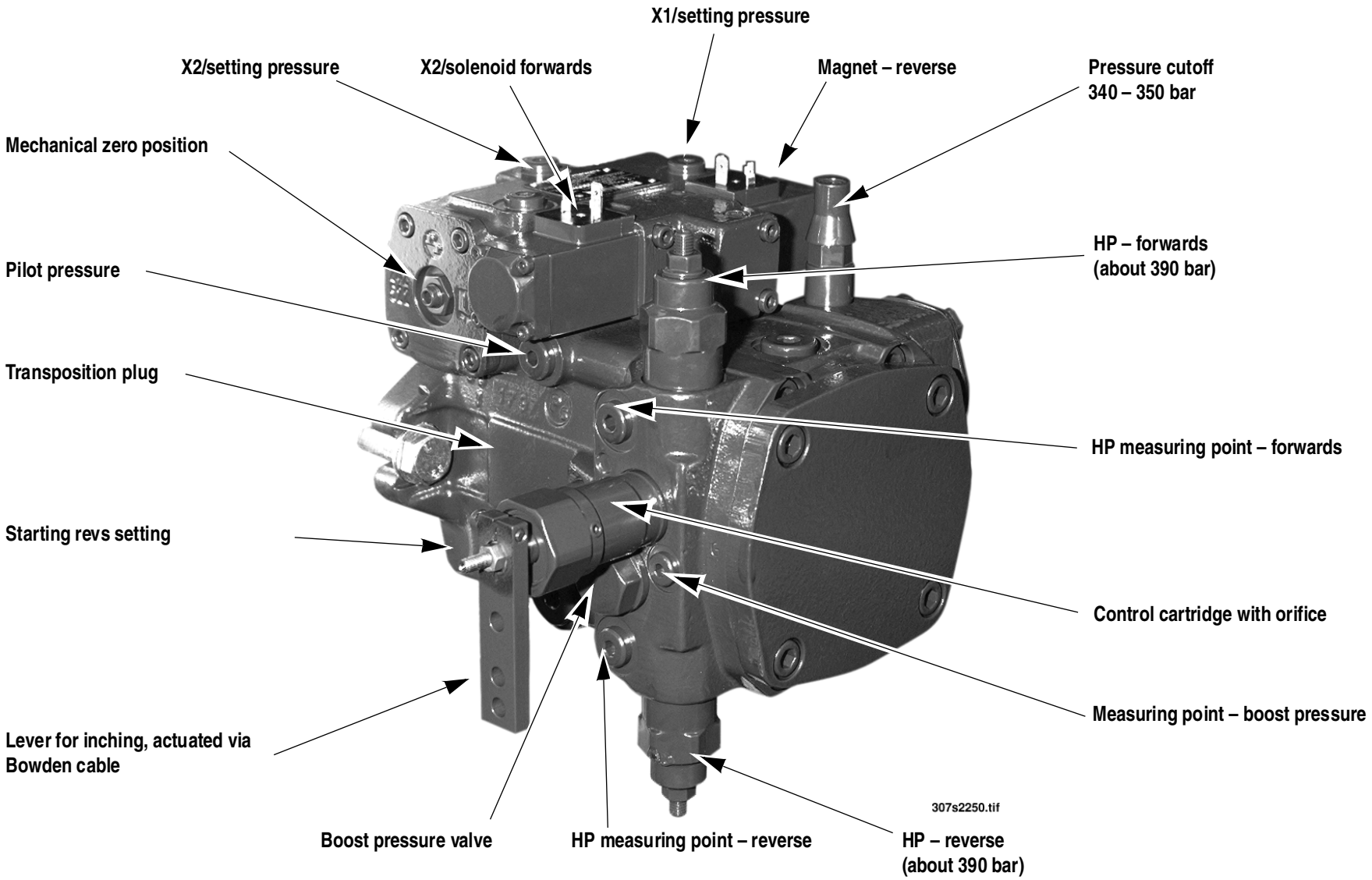

5.4 Variable displacement pump: measuring points

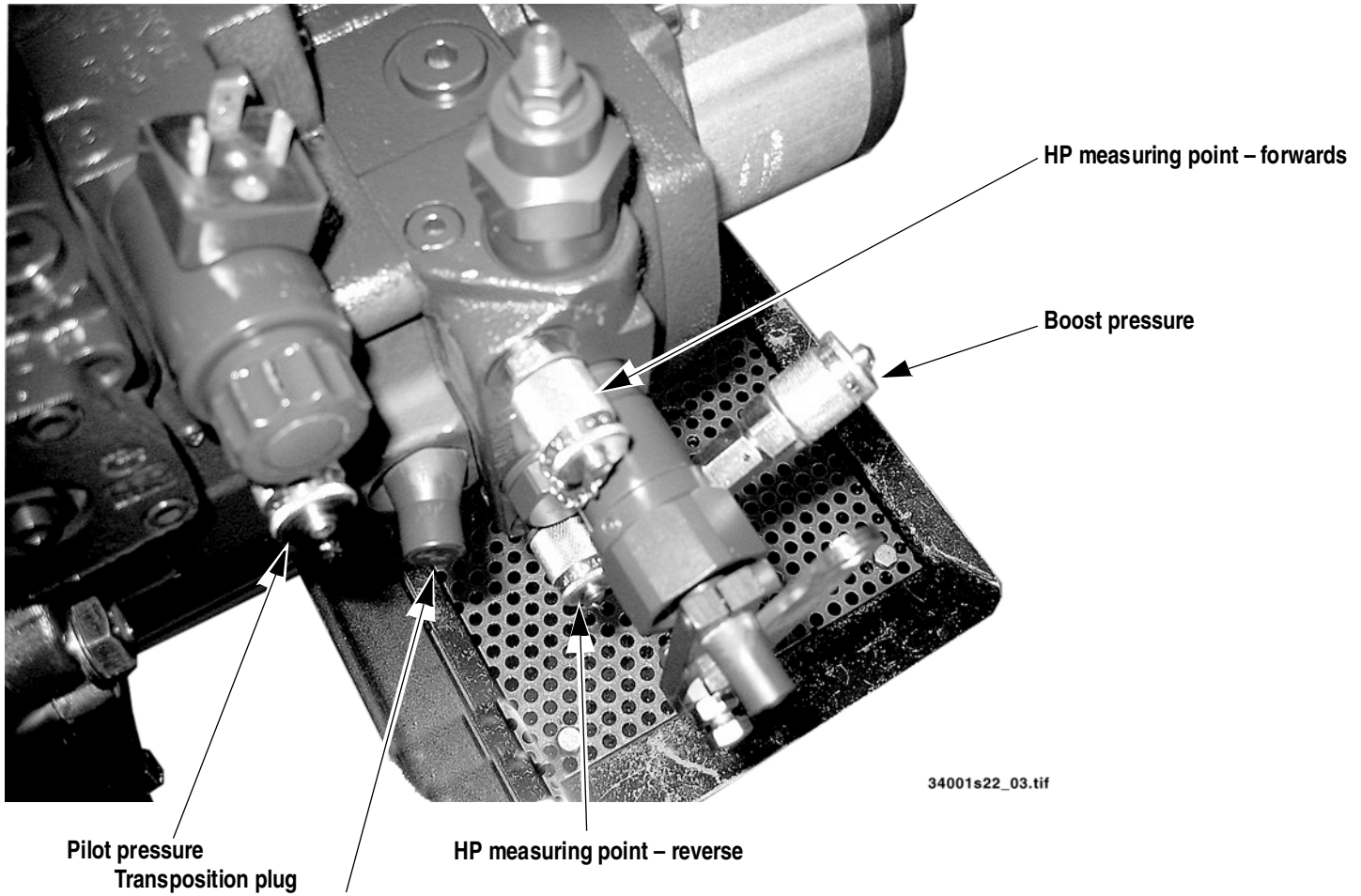

5.5 Hydraulic motor for model 340-01 (180): overview

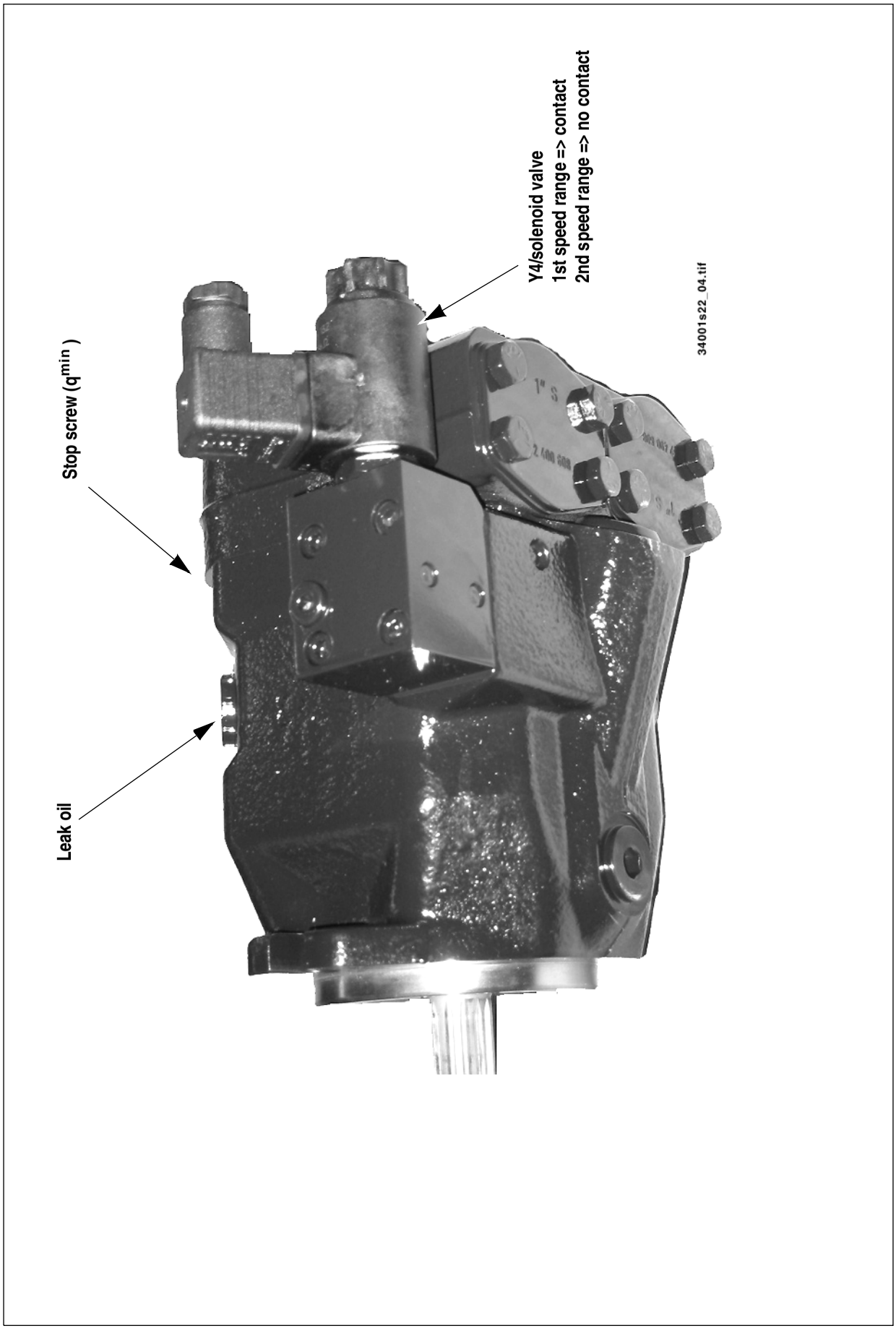

5.6 Hydraulic motor for model 341-01/341-02: overview

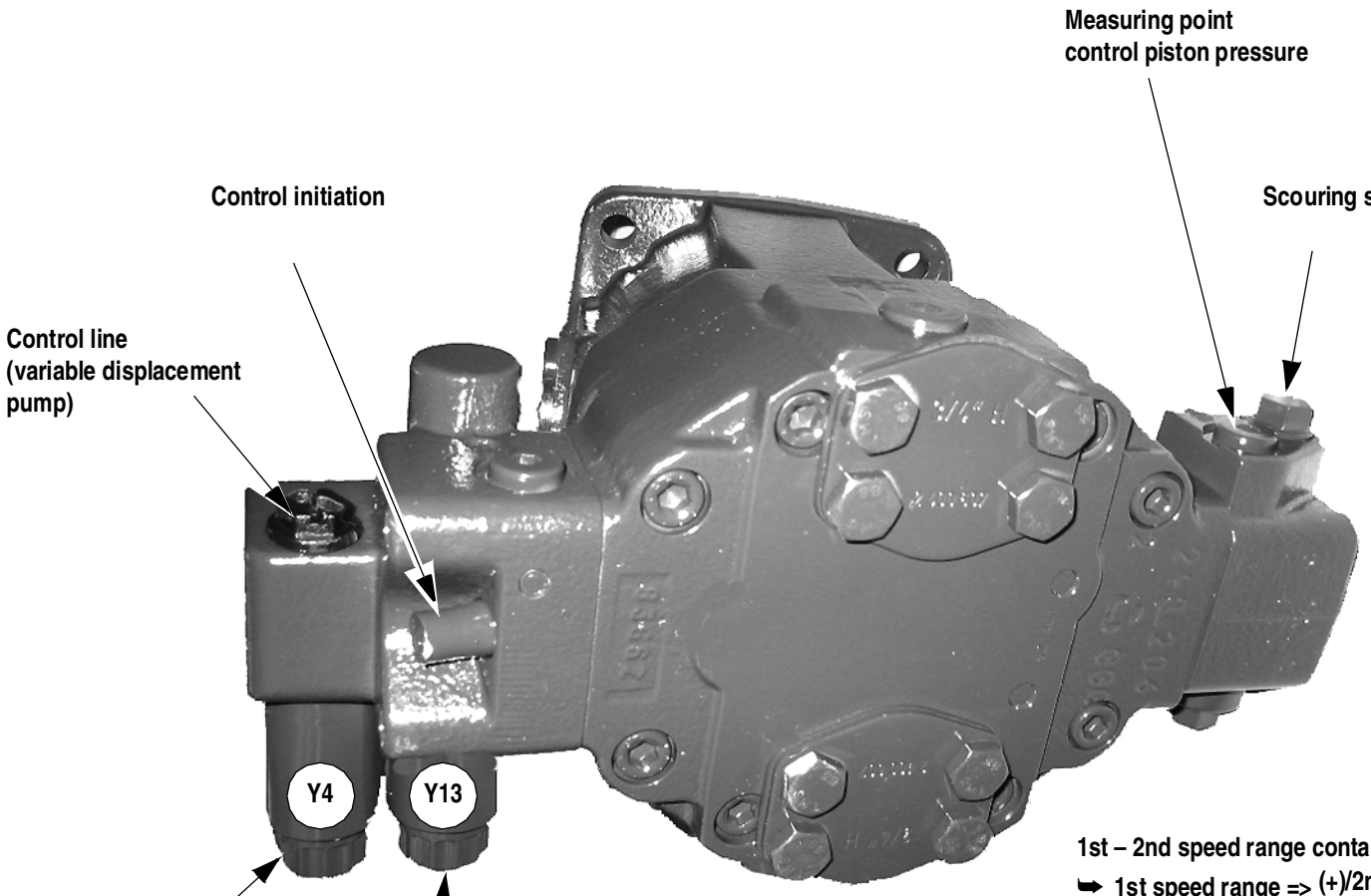

5.7 340-01 (180) drive: diagram

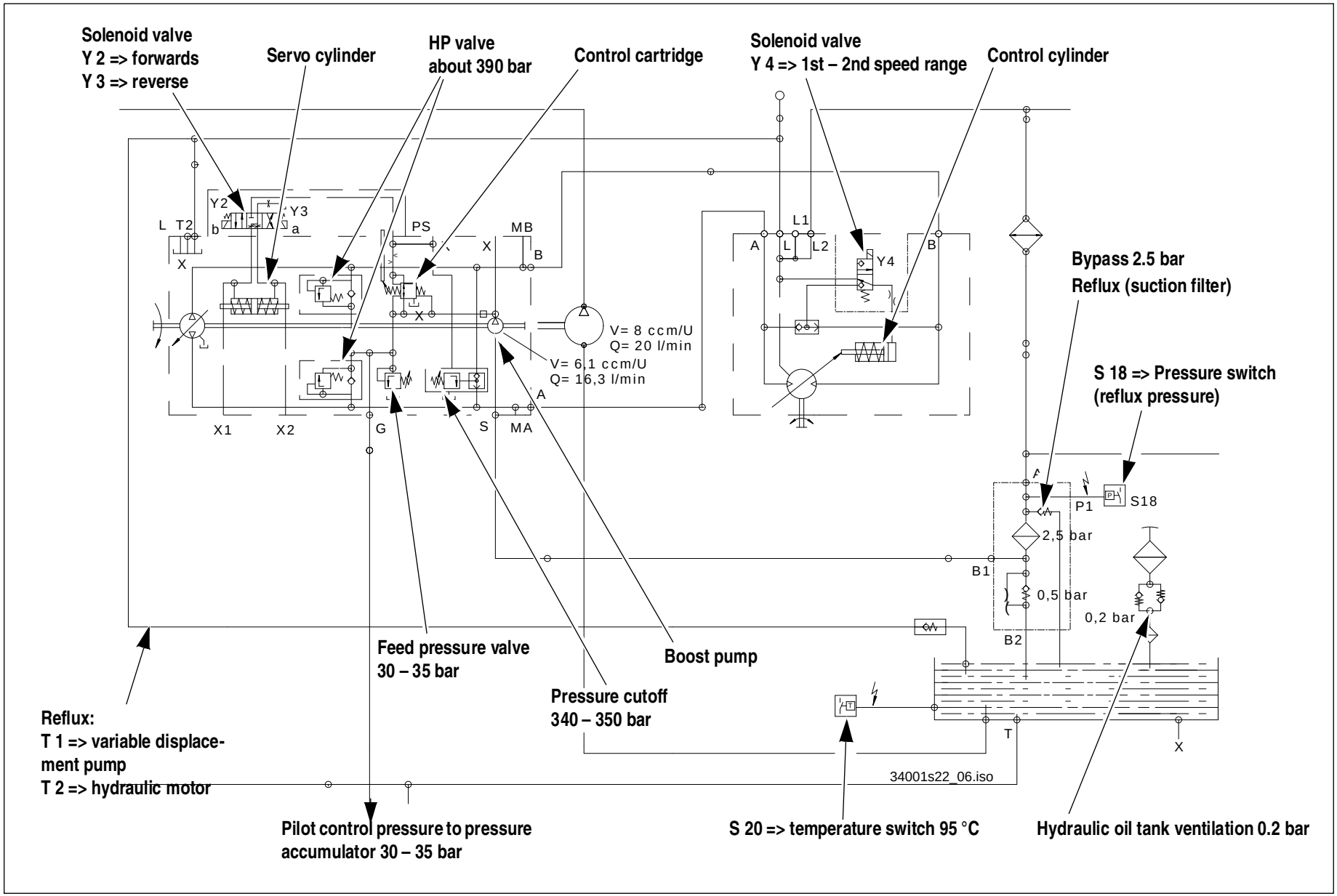

5.8 341-01/341-02 drive: diagram

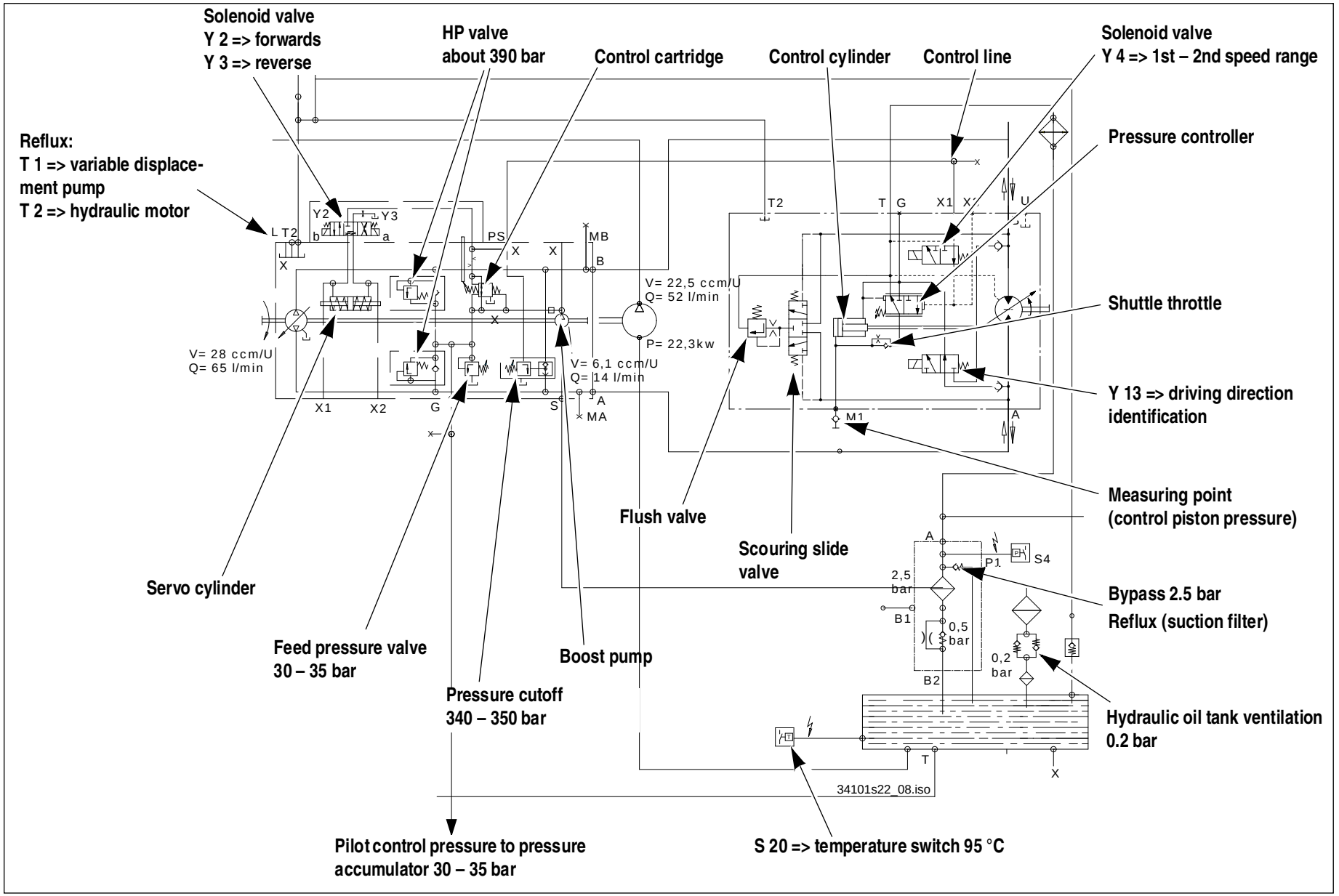

5.9 340-01 (180) drive: hydraulic oil circuit

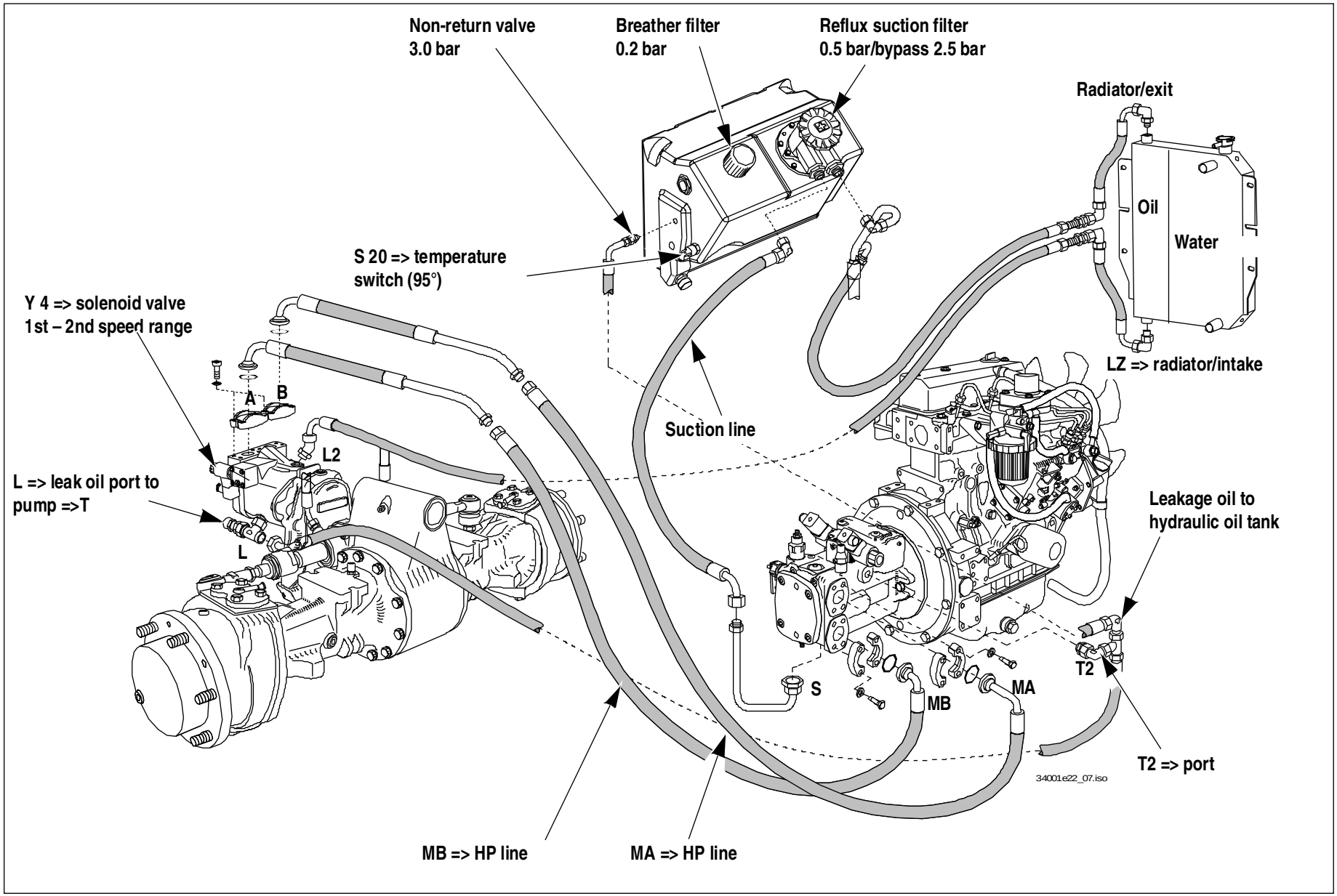

5.10 Check and adjustment instructions

Caution!

Run the machine warm to operating temperature (about 50 – 60 °C) before taking any measures or making any settings.

☞ *Adjust valves only with the engine at a standstill*

5.10.1 Towing

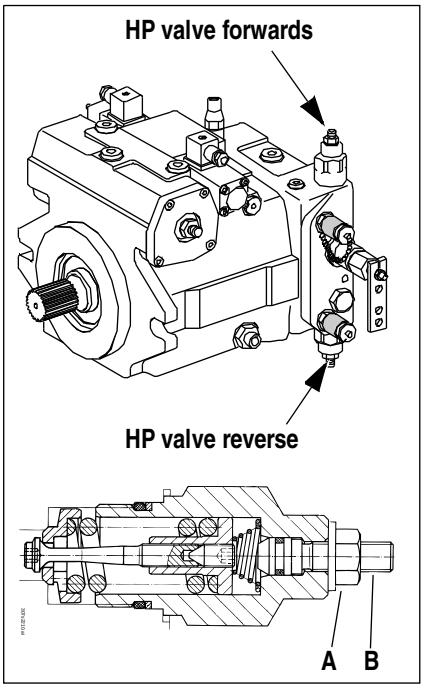

Tow away the machine as follows:

☞ Open the two HP limiting valves on the hydraulic pump. To do this:

- Unscrew locknut **A**
- Screw in hexagon socket screw **B** until it is flush with the locknut

Caution!

Do not tow the machine over longer distances. The variable displacement pump and the hydraulic motor may be damaged.

☞ *Tow the machine out of the hazard zone, e.g. on a low-platform semitrailer*

☞ If possible, run the engine at idling speed when towing the machine

☞ Reverse the changeover of the HP valves before taking the machine back into service!

- Unscrew hexagon socket screw **B** as far as it will go
- Tighten locknut **A**

5.10.2 Test report model 340-01 (180)

Model:	Prod. no. variable displacement pump	Prod. no. variable displacement motor	Serial no.
_____	_____	_____	_____

Test conditions:	Rated oil temperature: 50 – 60 °C Rated driving direction: forwards

See page:	Test features:	Notes:	Rated value: (rpm)	Nominal value: (rpm)	✔
	Min. idling speed		1025 – 1075		
	Max. idling speed		2780 – 2840		
5-13	Boost pressure	Max. engine revs	30 – 35 bar		
5-14	Pilot pressure	Max. engine revs	28 – 32 bar		
5-15	Starting revs	2nd speed range	1250 – 1350		
5-19	High pressure	2nd speed braked max. engine revs	340 – 350 bar		
5-16	Hydraulic resistance curve	2nd speed range braked at 2000 rpm	Over 280 bar		
5-18	Engine droop	1st speed range braked (150 – 160 bar) max. engine revs	2450 – 2550		
	Wheel speed	Max. engine revs 19 sec over 100 m	18 kph = 140 – 150		

5.10.3 Test report model 341-01/341-02 (280)

Model:	Prod. no. variable displacement pump	Prod. no. variable displacement motor	Serial no.
_____	_____	_____	_____

Test conditions:	Rated oil temperature: 50 – 60 °C Rated driving direction: forwards

See page:	Test features:	Notes:	Rated value: (rpm)	Nominal value: (rpm)	✔
	Min. idling speed		1025 – 1075		
	Max. idling speed		2565 – 2615		
5-13	Boost pressure	Max. engine revs	30 – 35 bar		
5-14	Pilot pressure	Max. engine revs	28 – 32 bar		
5-15	Starting revs	2nd speed range	1200 – 1300		
5-19	High pressure	2nd speed braked max. engine revs	370 – 380 bar		
5-16	Hydraulic resistance curve	2nd speed range braked at 2000 rpm	Over 280 bar		
5-18	Engine droop	1st speed range braked 225 – 235 bar max. engine revs	2250 – 2350		
5-21	Control piston pressure	2nd speed range after braking	220 – 240 bar		
	Wheel speed	Max. engine revs 19 sec over 100 m	18 kph = 140 – 150		

5.10.4 Adjusting boost pressure

Tools required:

- Pressure gauge up to 60 bar

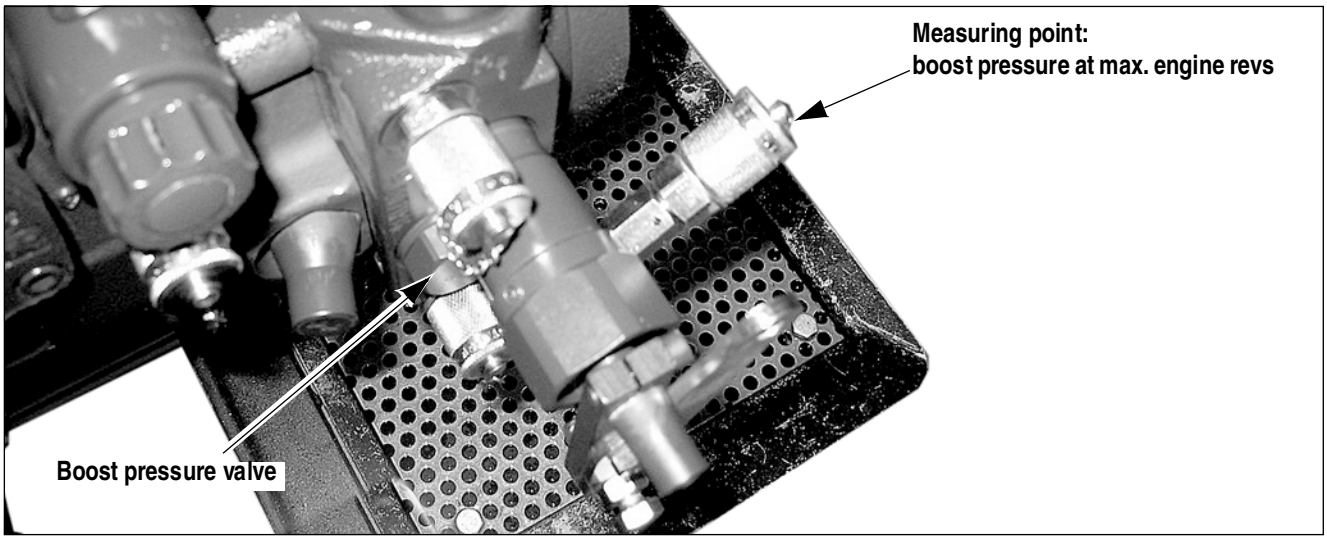

☞ Check/adjust boost pressure as follows:

- Move the drive lever to neutral
- Apply the handbrake
- Connect the pressure gauge (60) bar to the measuring point
- Start the diesel engine
  - ➥ Boost pressure at idling speed: 30 bar
  - ➥ At full load about 35 bar

☞ If boost pressure is too low:

- Unscrew the boost pressure valve
  - ➥ Set boost pressure with spacers

5.10.5 Adjusting pilot pressure

Tools required:

- Pressure gauge up to 60 bar

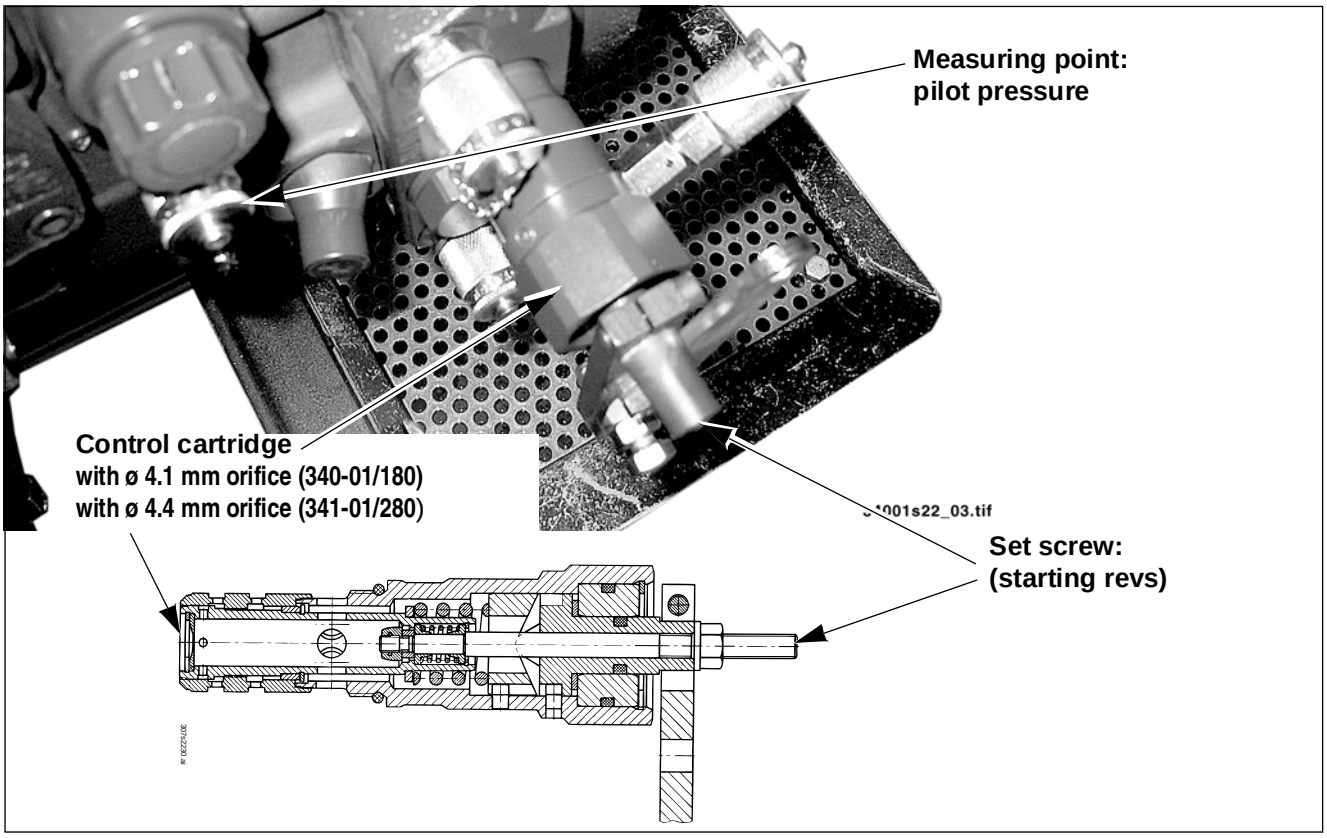

☞ Check/adjust pilot pressure as follows:

- Move the drive lever to neutral
- Apply the handbrake
- Connect the pressure gauge (60) bar to the measuring point
- Start the diesel engine and set max. revs
  - ➥ Rated pilot pressure: 28 – 30 bar

☞ Pilot pressure is achieved by:

- The 4.1 or 4.4 mm ø orifice in the control cartridge
- Setting the starting revs with the set screw

☞ If pilot pressure is not reached in spite of existing boost pressure, check the following:

- Control cartridge
  - ➥ Sleeve easily movable
- Orifice
- Inching facility
- Pressure cutoff
- Servo cylinder

5.10.6 Adjusting starting revs

Tools required:

- Tachometer

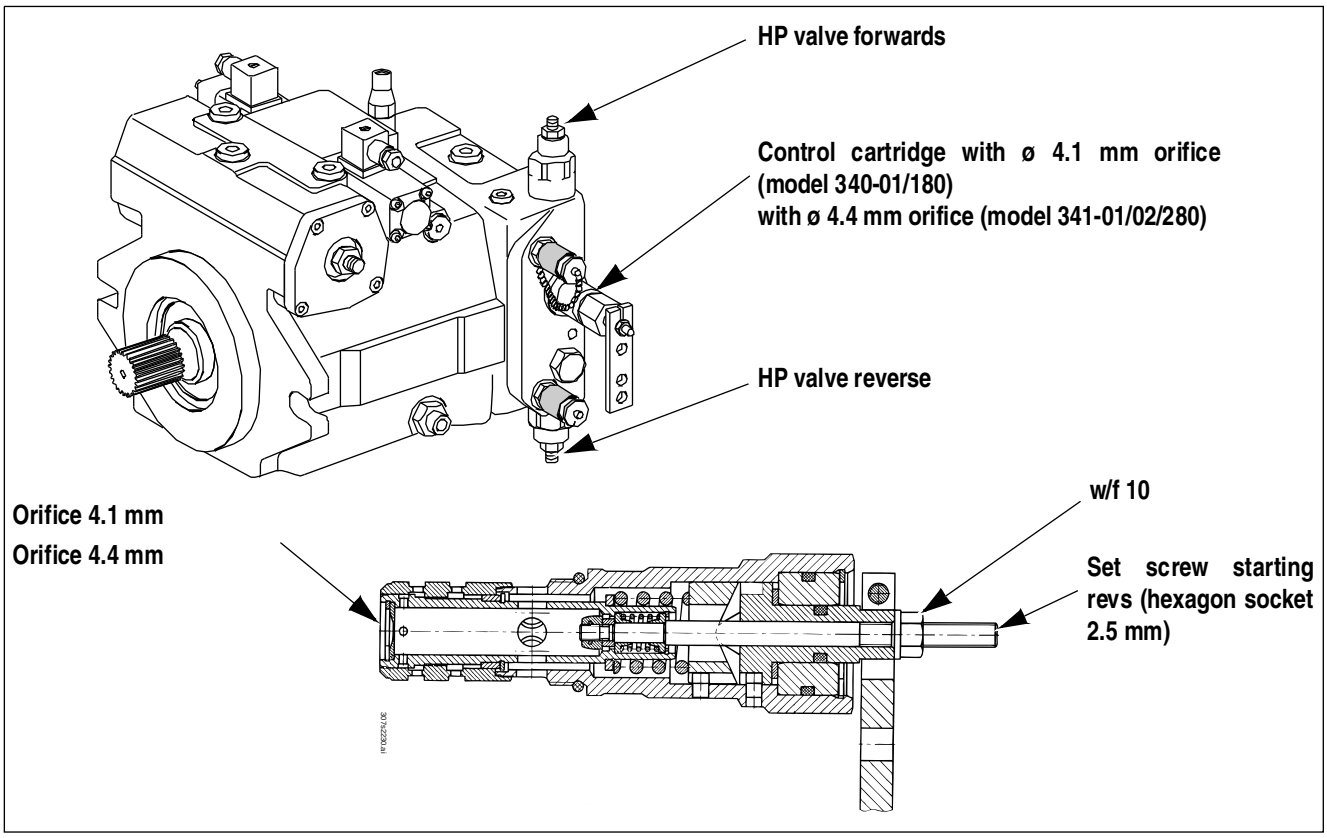

☞ Check/adjust the starting revs as follows:

- Move the drive lever to neutral
- Apply the handbrake
- Connect the tachometer
- Start the diesel engine and engage 2nd speed range (forwards)

  ➥ Machine must move off at engine revs of 1250 – 1350 rpm

☞ Machine moves off too early (at lower speed):

- Adjust the set screw on the control cartridge

  ☞ To do this, slacken the locknut w/f 10 and screw in the hexagon socket screw (2.5)

  ☞ Tighten locknut w/f 10

☞ Machine moves off too late (at higher speed):

- Adjust the set screw on the control cartridge

  ☞ To do this, slacken the locknut w/f 10 and unscrew the hexagon socket screw (2.5 mm)

  ☞ Tighten locknut w/f 10

5.10.7 Adjusting the hydraulic resistance curve on the transposition screw

Tools required:

- Tachometer (3000 rpm)
- Pressure gauge up to 600 bar

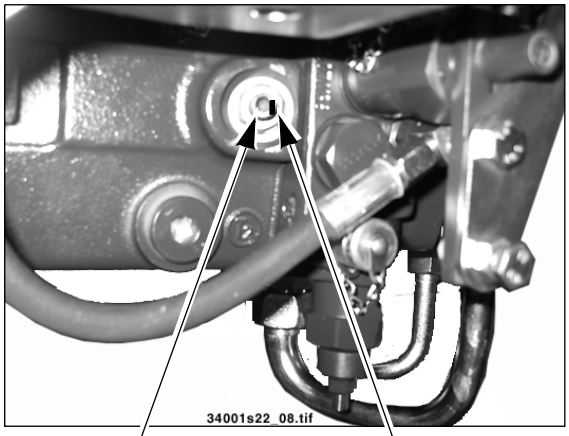

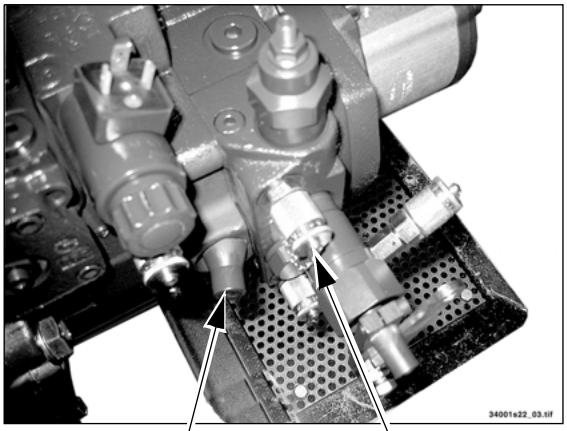

Transposition screw w/f 17 and allen key 5

Transposition screw is set ex works

Leaded transposition screw

HP measuring point forwards

Important!

Please contact Kramer-Werke GmbH customer service before making any changes on the hydraulic resistance curve.

☞ Check/adjust the hydraulic resistance curve as follows:

- Safely jack up the machine at the front and rear
- Switch off the engine
- Unhitch the cable pull on the inching pedal
- Connect a pressure gauge (max. 600 bar) to the measuring point
- Connect a tachometer to the diesel engine
- Start the engine
- Move the drive lever to 2nd speed range (forwards)
- Slowly increase the engine revs
- Fully brake the machine with the service brake

  ➥ With the engine revs at 2000 rpm, high pressure must be 280 bar as a minimum

5.10.8 Readjusting the hydraulic resistance curve

Caution!

In order to avoid damage to the variable displacement pump:

☞ *Adjust the transposition screw only in the 0 – 6 o'clock range (see figure)*

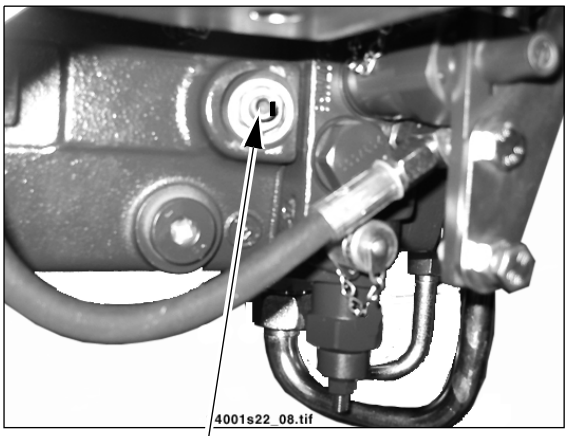

Transposition plug

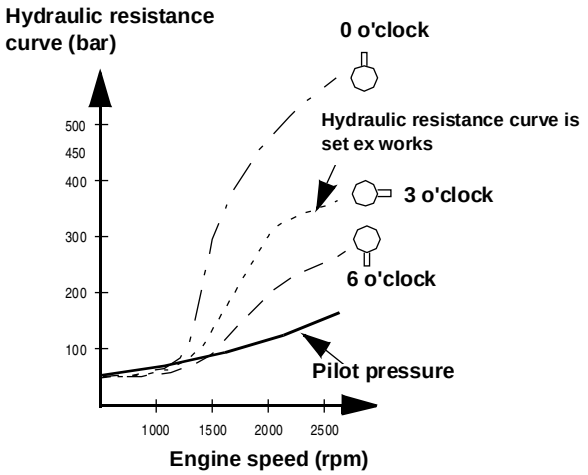

☞ Readjust the hydraulic resistance curve as follows:

- ➥ **0 o'clock =>** 280 bar high pressure is easily reached
- ➥ **3 o'clock =>** adjustment ex works
- ➥ **6 o'clock =>** 280 bar high pressure is not reached as easily

5.10.9 Checking engine droop

Tools required:

- Tachometer (3000 rpm)
- Pressure gauge (600 bar)

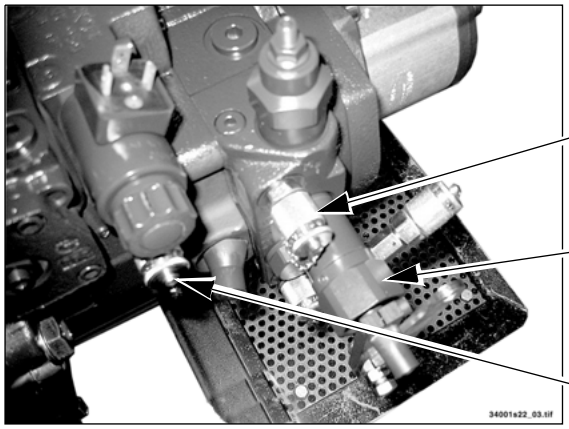

☞ Check engine droop as follows:

- Safely jack up the machine at the front and rear
- Switch off the engine
- Unhitch the cable pull on the inching pedal
- Connect the pressure gauge (600 bar) to the HP measuring point (forwards)
- Connect a tachometer to the diesel engine
- Start the engine
- Move the drive lever to 1st speed range (forwards)
- Set the diesel engine to maximum revs

Wheel loader model 340-01 (180)

- Brake the drive with the service brake to 150 – 160 bar pump pressure
  - ➥ Engine droop must set in at an engine speed of 2450 – 2550 rpm

Wheel loader model 341-01 / 341-02 (280)

- Brake the drive with the service brake to 180 bar pump pressure
  - ➥ Engine droop must set in at an engine speed of 2250 – 2350 rpm

➥ If engine revs are over 2550 rpm at an identical brake-pedal pressure:

- Check the orifice of the control cartridge, and check pilot pressure

➥ If engine revs are below the indicated engine droop at an identical brake-pedal pressure:

- Check diesel engine output
- Check the air filter (increased dust pile-up on filter cartridge)
- Check the fuel system (filter, dirt etc.)

5.10.10 Adjusting high pressure/pressure cutoff

Tools required:

- Pressure gauge (600 bar)

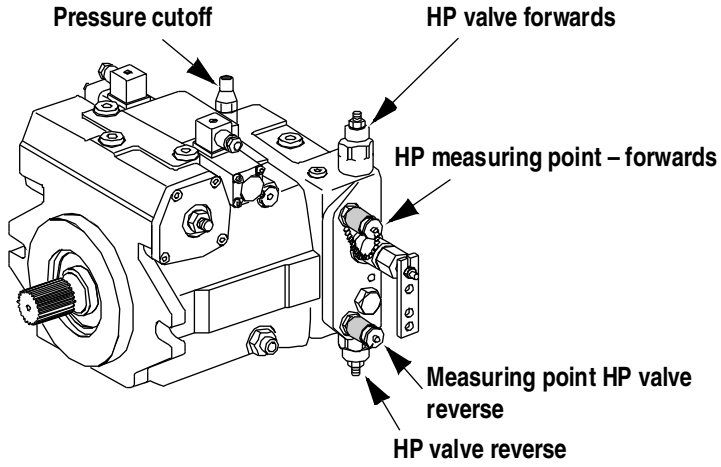

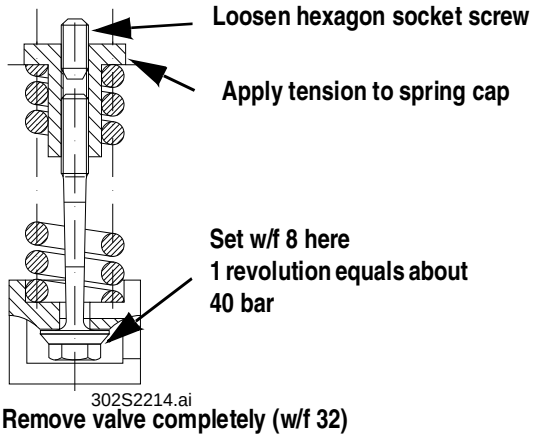

Check high pressure as follows:

☞ Connect the pressure gauge.

☞ Start the diesel engine and move the drive lever to 1st speed range (forwards)

☞ Drive the machine against hydraulic resistance and read off the pressure on the gauge

➥ 340-01 (180) high pressure must be 340 – 350 bar

➥ 341-01/341-02 (280) high pressure must be 370 – 380 bar

Adjust the pressure on the pressure cutoff

☞ Pressure increase:

➥ Screw in the pressure cutoff

☞ Pressure reduction:

➥ Unscrew the pressure cutoff

Pressure setting of the HP valves exceeds the pressure cutoff setting by about 10 %.

Check/adjust the HP valves as follows:

☞ Set pressure cutoff to “hydraulic resistance”

☞ Connect both pressure gauges to measurement ports HP forwards driving and HP reverse driving

☞ Start the diesel engine and move the drive lever to 1st speed range (forwards).

☞ Drive the machine against hydraulic resistance and read off the pressure on the gauge.

➥ Do not allow the wheels to spin

➥ High pressure must be about 390 bar for model 340-01 (180) and about 420 bar for model 341-01/341-02 (280)

If high pressure (390 or 420 bar) is lower, then ...

☞ Unscrew the pressure valve completely and remove the spring pile

☞ Clamp the spring seat of the spring pile in a vice and slacken the hexagon socket screw

☞ Carry out the setting on the pressure valve with w/f 8.

➥ Once adjustment/measurement is finished, set the pressure back to 370 – 380 bar

5.10.11 Pressure cutoff: exploded view

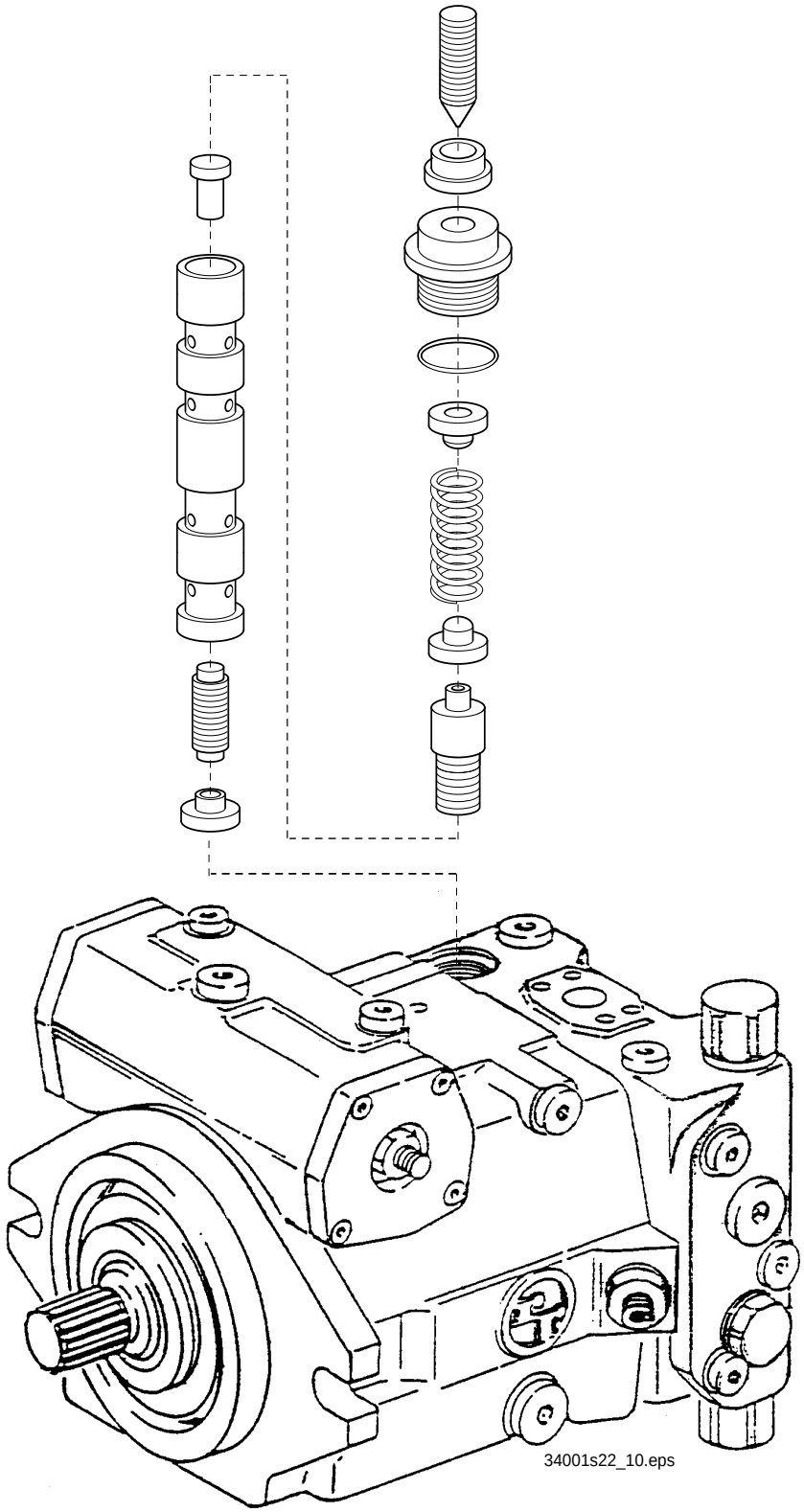

5.10.12 Adjusting control piston pressure of hydraulic motor 341-01 / 02 (280)

Tools required:

- 2 Pressure gauges (600 bar)

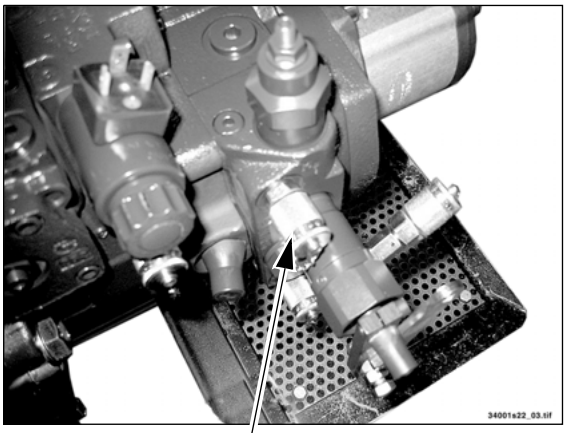

HP measuring point – forwards

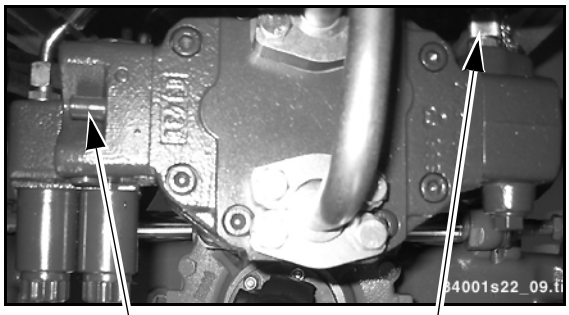

Set screw for control piston pressure

Measuring point control piston pressure

☞ Check engine droop as follows:

- Safely jack up the machine at the front and rear
- Switch off the engine
- Unhitch the cable pull on the inching pedal
- Connect the pressure gauge (600 bar) to the HP measuring point forwards
- Connect the pressure gauge (600 bar) to the measuring point for control piston pressure
- Connect a tachometer to the diesel engine
- Start the engine
- Move the drive lever to 2nd speed range (forwards)
- Set the diesel engine to maximum revs
  - ➥ Both pressure gauges show approximately the same value
- Slowly brake the drive with the service brake
  - ➥ Identical pressure increase in both pressure gauges
  - ➥ The pressure gauge at the measuring point for control piston pressure must drop at 220 – 240 bar

☞ Adjusting the control piston pressure

- Screw in the set screw => pressure increases
- Unscrew the set screw => pressure drops

Axles

6 Axles

6.1 Axle type label

Type label contains all axle data

Wheel loader model: 340-01 (180)

➥ **Axle type: front axle 26.09/rear axle 26.09 M+TB**

Wheel loader model: 341-01/341-02 (280)

➥ **Axle type: front axle 26.09 M/rear axle 26.09 M+TB**

Axle type label

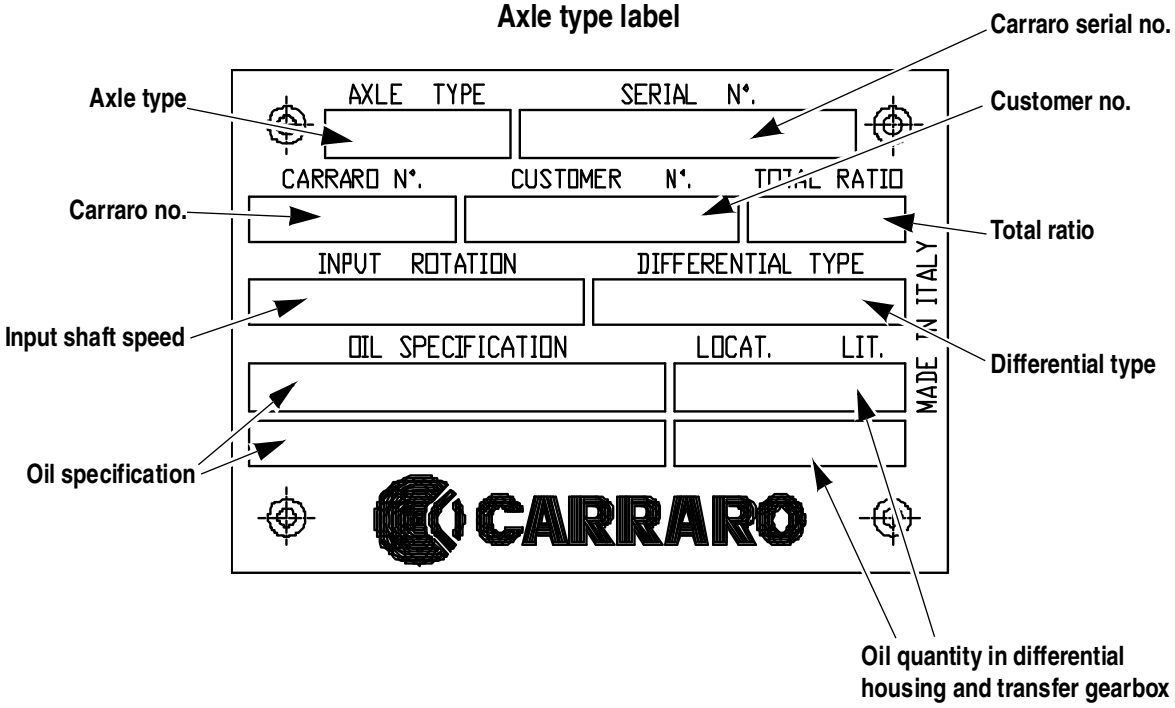

6.2 Drain, fill and check plug model 340-01

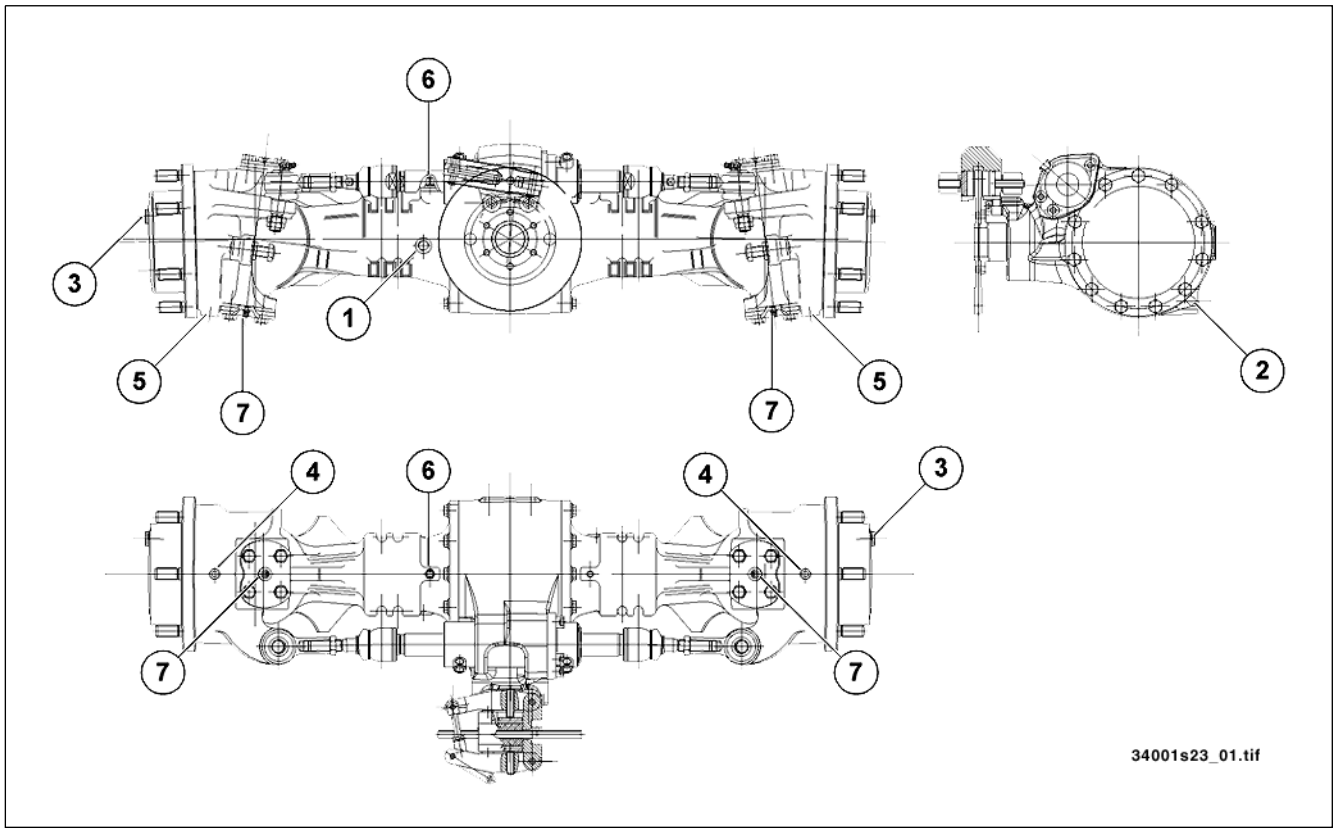

Pos	Description
1	Fill and check plug – axle tube
2	Drain plug – differential
3	Check plug – planetary drive
4	Fill plug – planetary drive
5	Drain plug – planetary drive
6	Breather
7	Lubrication points (grease nipples)

6.3 Tightening values (Nm) model 340-01

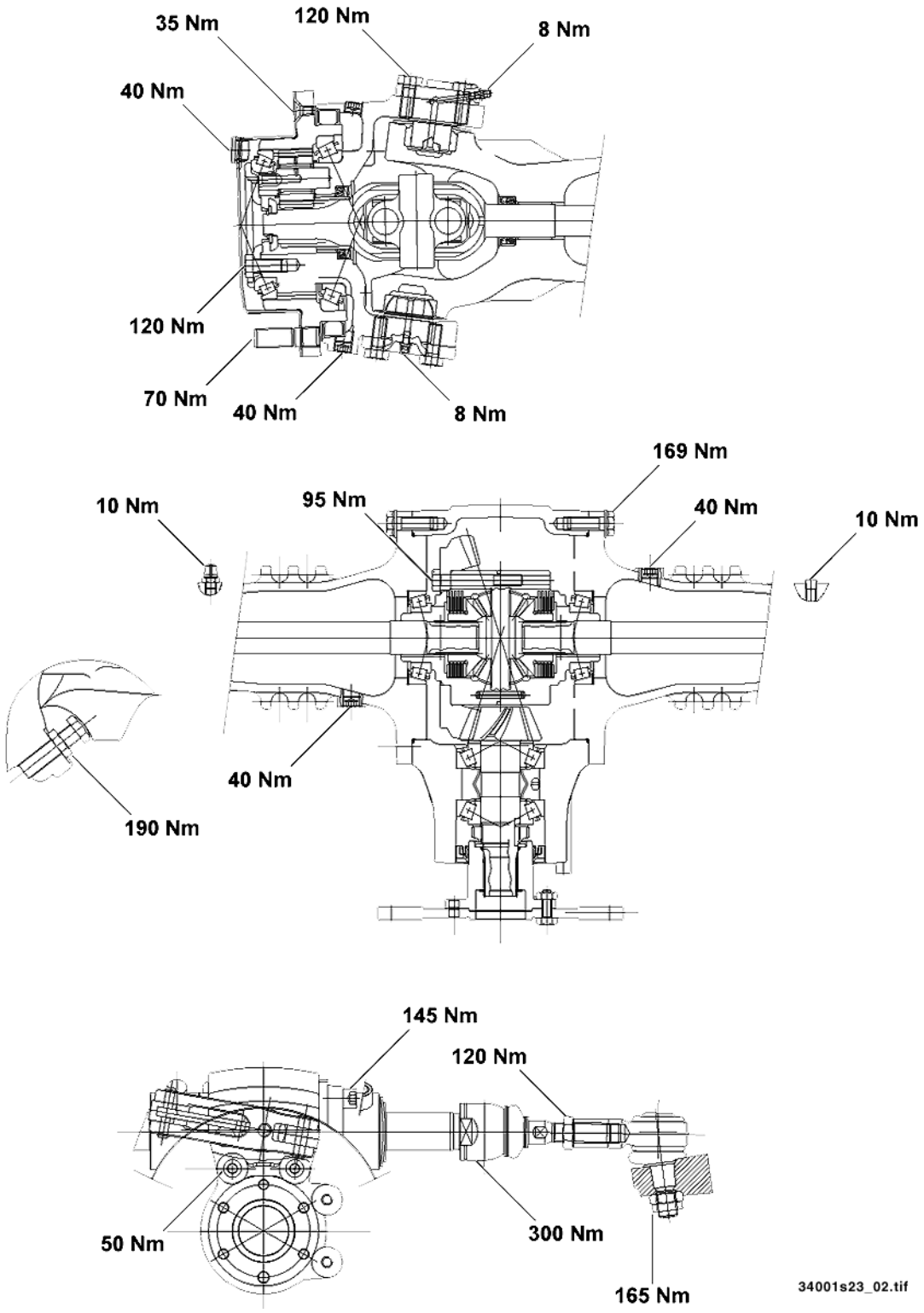

6.4 Screw connections model 340-01

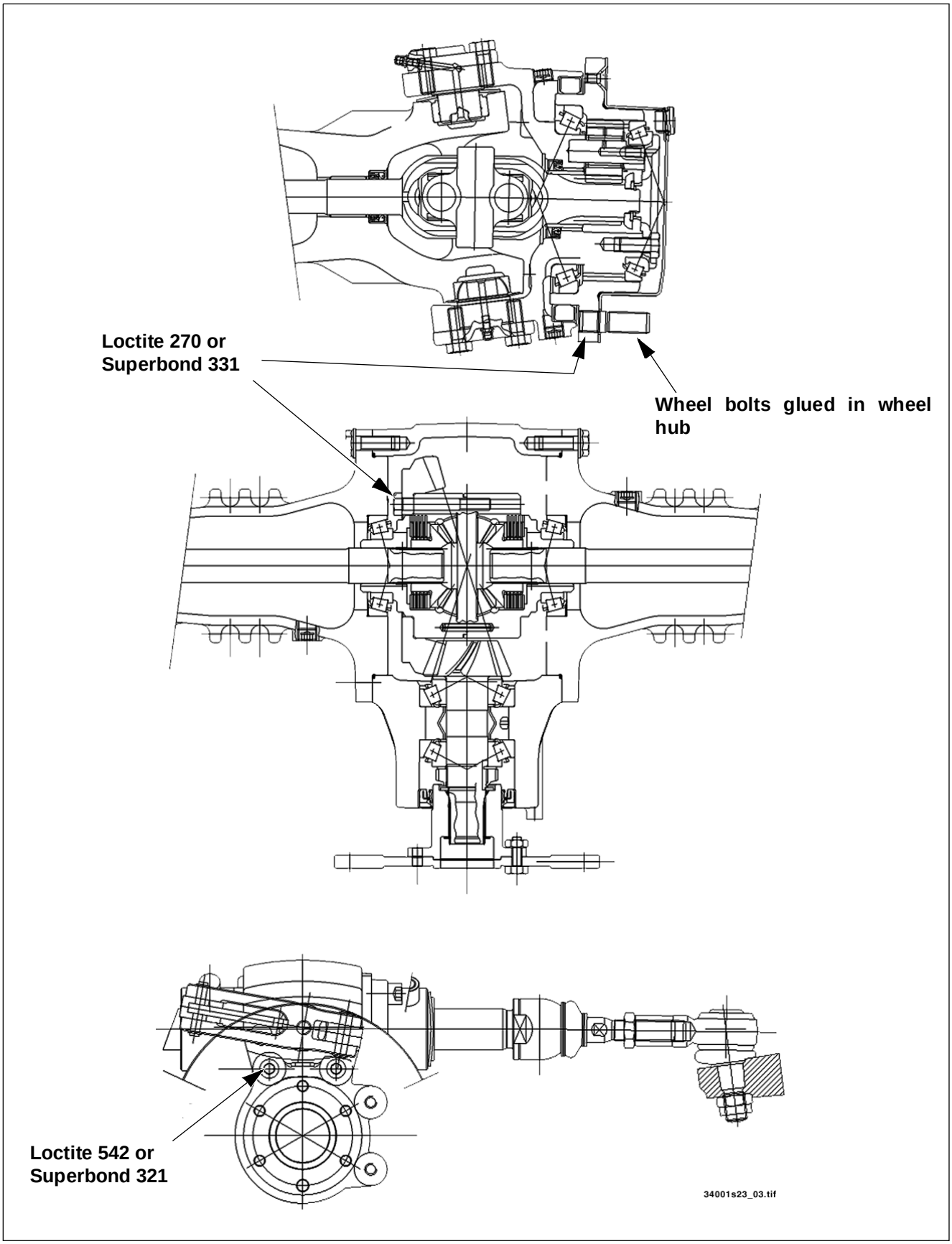

6.5 Sealing work

6.5.1 Input flange – front axle models 340-01/341-01/341-02

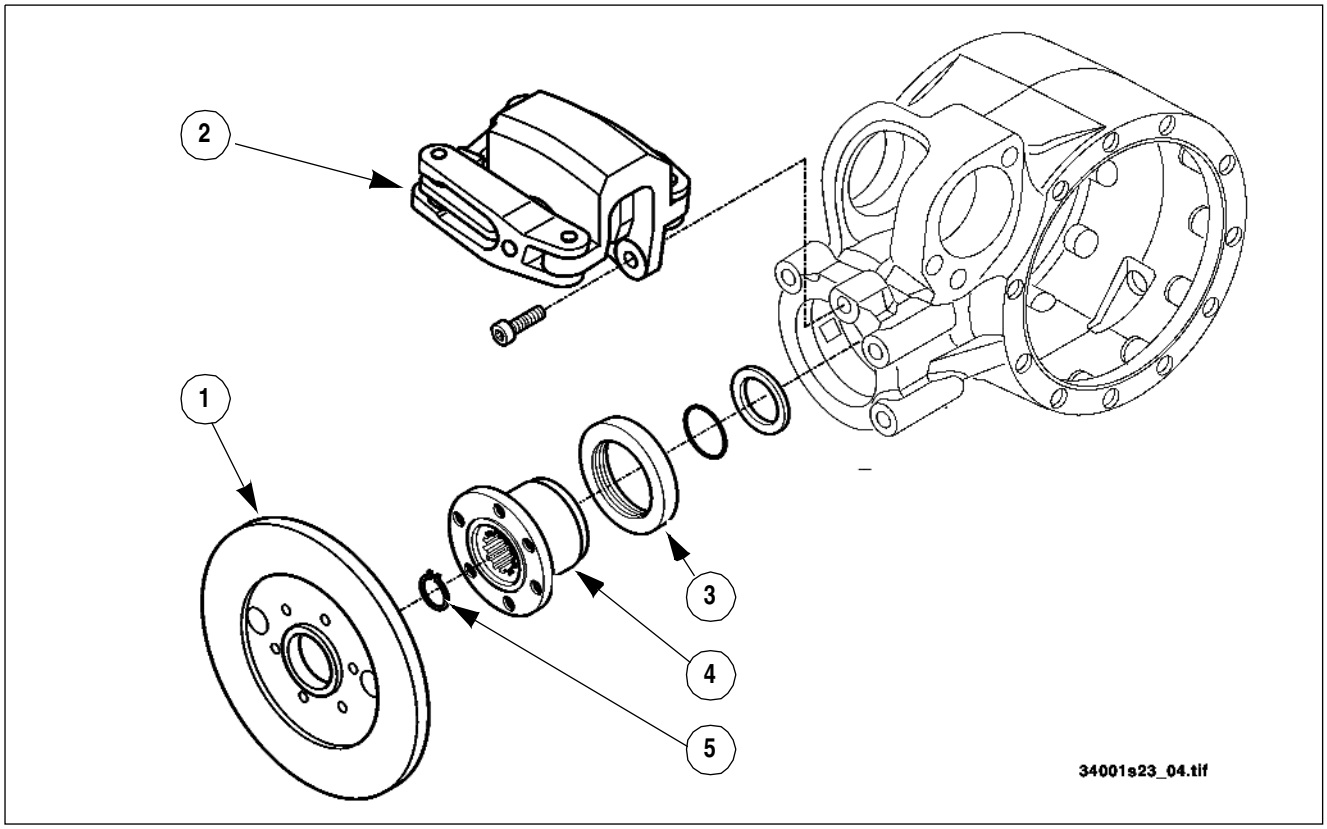

Replacing the rotary shaft seal

☞ Proceed as follows:

- Remove the cardan shaft
- Remove brake calliper **2**
- Remove brake disc **1**
- Remove circlip **5** with suitable tools
- Remove flange **4** from the input shaft with an extractor
- Replace rotary shaft seal **3** with a new one
- Assembly in the reverse order

6.5.2 Sealing work: double cardan shaft – planetary carrier model 340-01

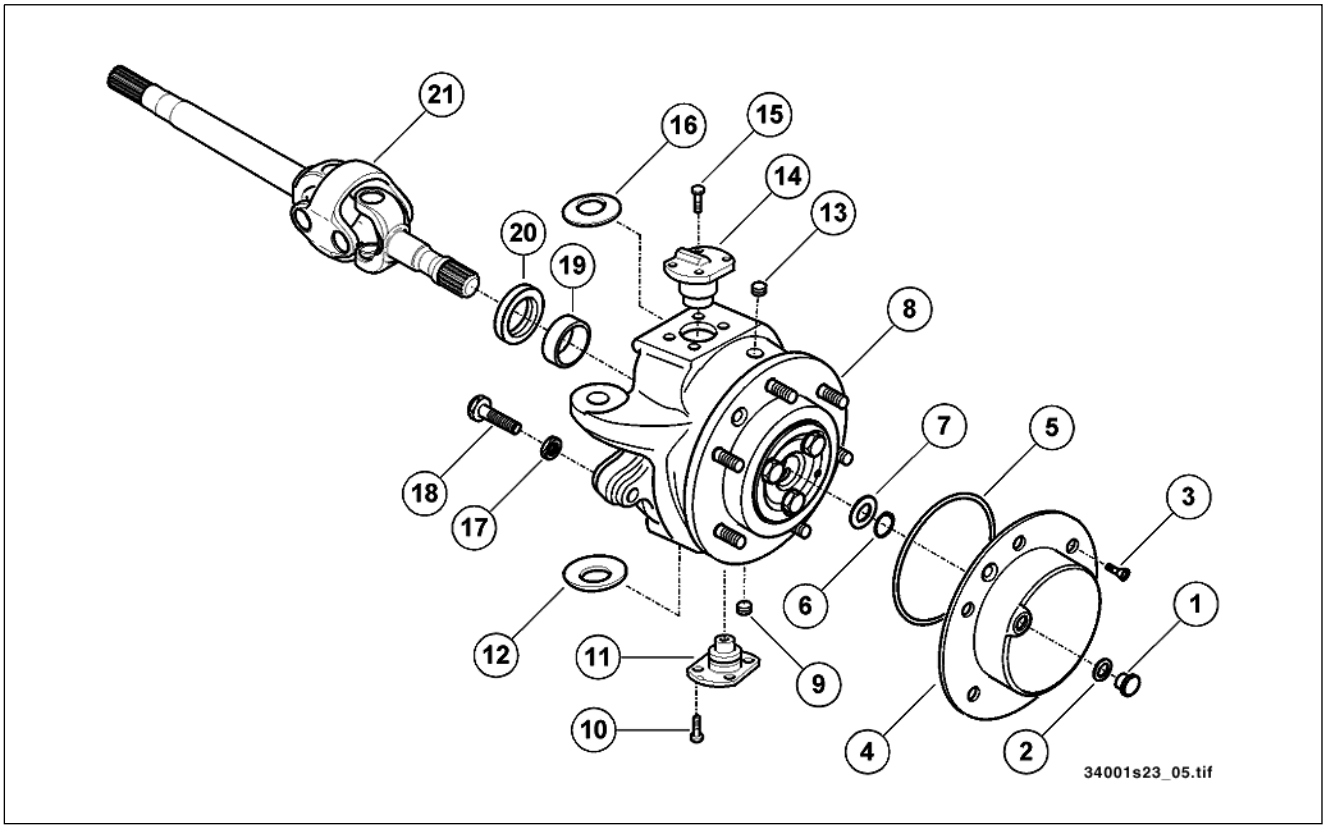

6.5.3 Sealing work: planetary carrier model 340-01

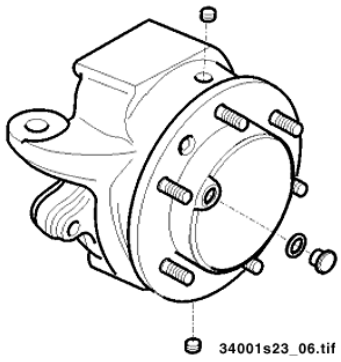

Fig. 64:

☞ Draining the oil

- Open check plug **13**
- Remove drain plug **9** and drain the oil

Environment!

Use a suitable container to collect the oil as it drains and dispose of it in an environmentally friendly manner!

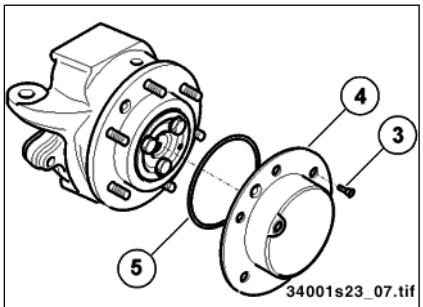

Fig. 65:

☞ Remove fastening screws **3**

☞ Remove cover **4**

☞ Remove O-ring **5** from the wheel hub

Danger!

Careful when removing the planetary drive –

Danger of personal injury!

☞ *Use a strap or cable to secure the planetary drive onto a lifting tackle or other lifting gear to avoid damage or personal injury*

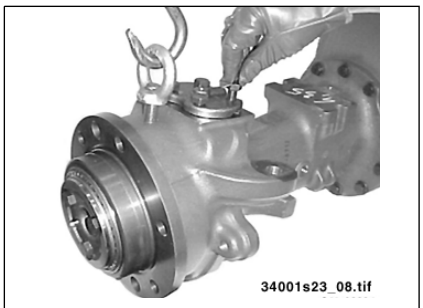

Fig. 66:

☞ Mount the eyebolt for lifting the planetary drive

☞ Remove screws **10**/**15**

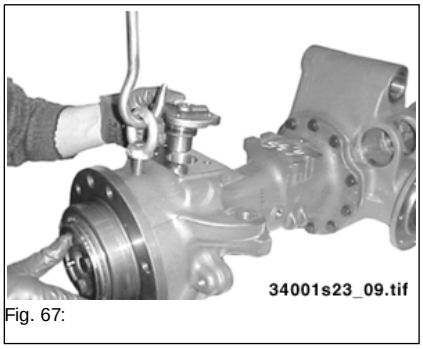

Fig. 67:

☞ Extract bearing pins **14** (upper) and **11** (lower)

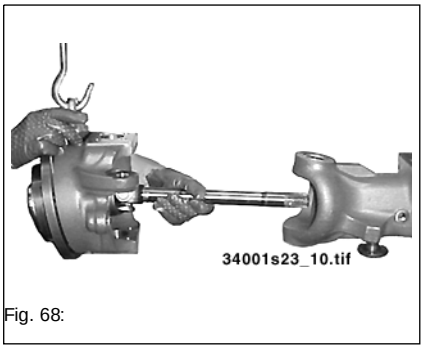

Fig. 68:

☞ Carefully remove the planetary drive with the double cardan shaft from the axle carrier

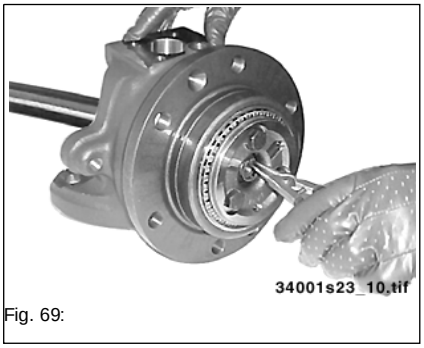

Fig. 69:

☞ Remove circlip **6** with a suitable tool from double cardan shaft **21**

☞ Remove spacer washer **7**

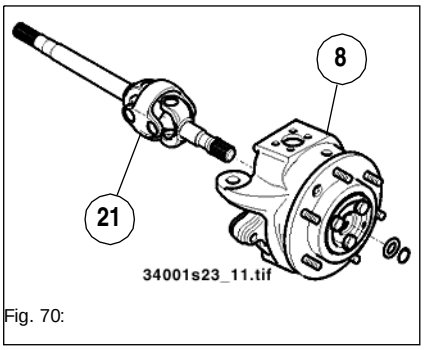

Fig. 70:

☞ Extract double cardan shaft **21** from planetary drive **8**

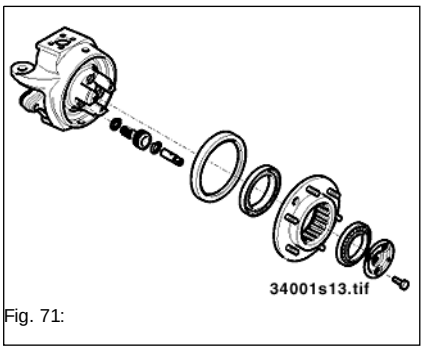

Fig. 71:

☞ Dismantle the planetary drive (– see *Sealing work: planetary drive model 340-01* on page 6-11)

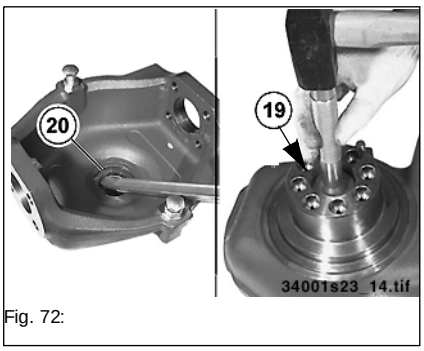

Fig. 72:

☞ Place the planetary carrier on firm and level ground

Caution!

Do not damage the seat of the rotary shaft seal in the planetary carrier as you remove it

☞ *Carefully remove rotary shaft seal **20** with a mounting lever*

☞ Turn the planetary carrier and drive out bushing **19** with a suitable adapter

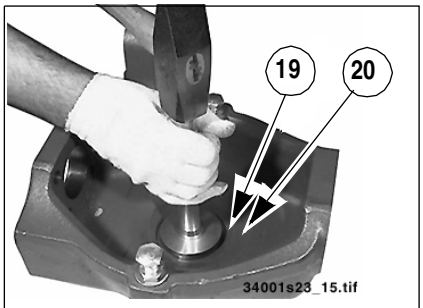

Fig. 73:

☞ Thoroughly clean all parts removed

☞ Mount bushing **19** with an adapter

☞ Insert rotary shaft seal **20** into the planetary carrier housing with an adapter

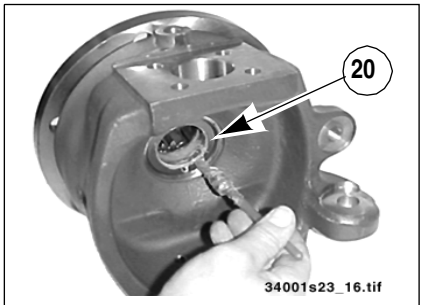

Fig. 74:

Caution!

The rotary shaft seal can be damaged when fitting the double cardan shaft.

☞ *Wrap thin protective tape around the profile of the double cardan shaft, so that the tape can be removed after assembly.*

☞ Fill the sealing ring grease chamber of rotary shaft seal **20** ¾ full with grease

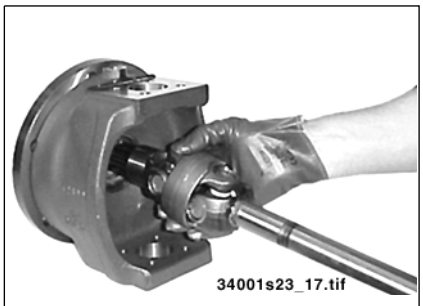

Fig. 75:

☞ Fit double cardan shaft **21** into the planetary carrier

☞ Remove the protective cover from the double cardan shaft

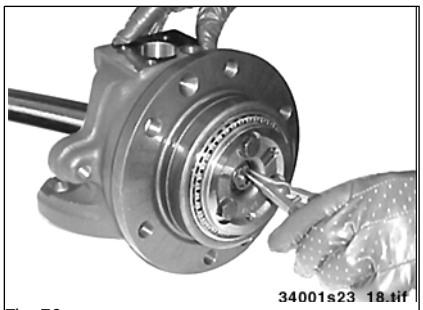

Fig. 76:

☞ Fit washer **7** and circlip **6** onto the end of the shaft

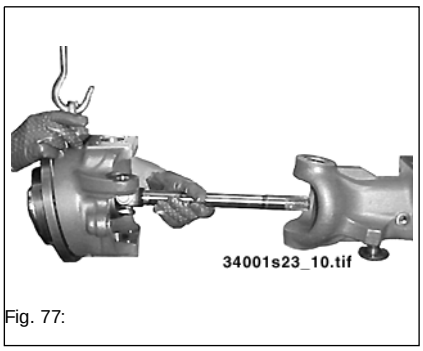

Fig. 77:

☞ Insert the planetary carrier with the double cardan shaft into the axle carrier

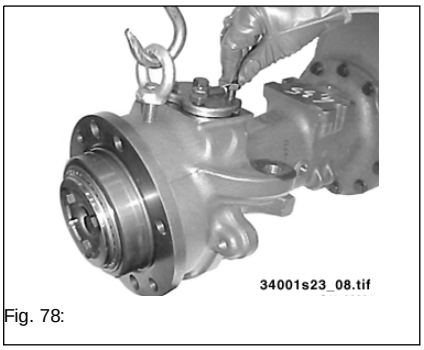

Fig. 78:

Do not use the existing wave spring washers as spacers

Observe the following during assembly:

☞ Fit the thick wave spring washer above

☞ Fit the thin wave spring washer below

☞ Mount king pins **11** / **14** and secure them with screws **10** / **15**
(observe the torque – see *Tightening values (Nm) model 340-01* on page 6-3)

☞ Remove the protective tape from the double cardan shaft

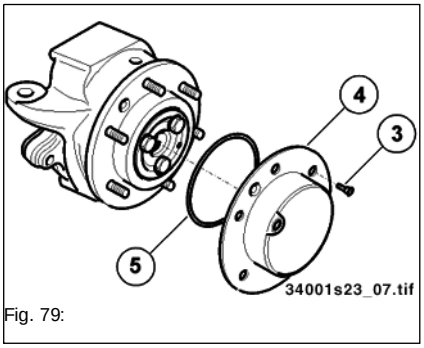

Fig. 79:

☞ Place a new O-ring **5** onto the flange housing

☞ Mount cover **4** with screws **3**
(observe the torque – see *Tightening values (Nm) model 340-01* on page 6-3)

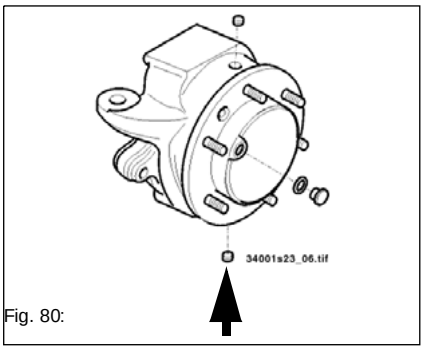

Fig. 80:

☞ Fit the drain plug

☞ Fill in oil

☞ Check the oil level

6.5.4 Sealing work: planetary drive model 340-01

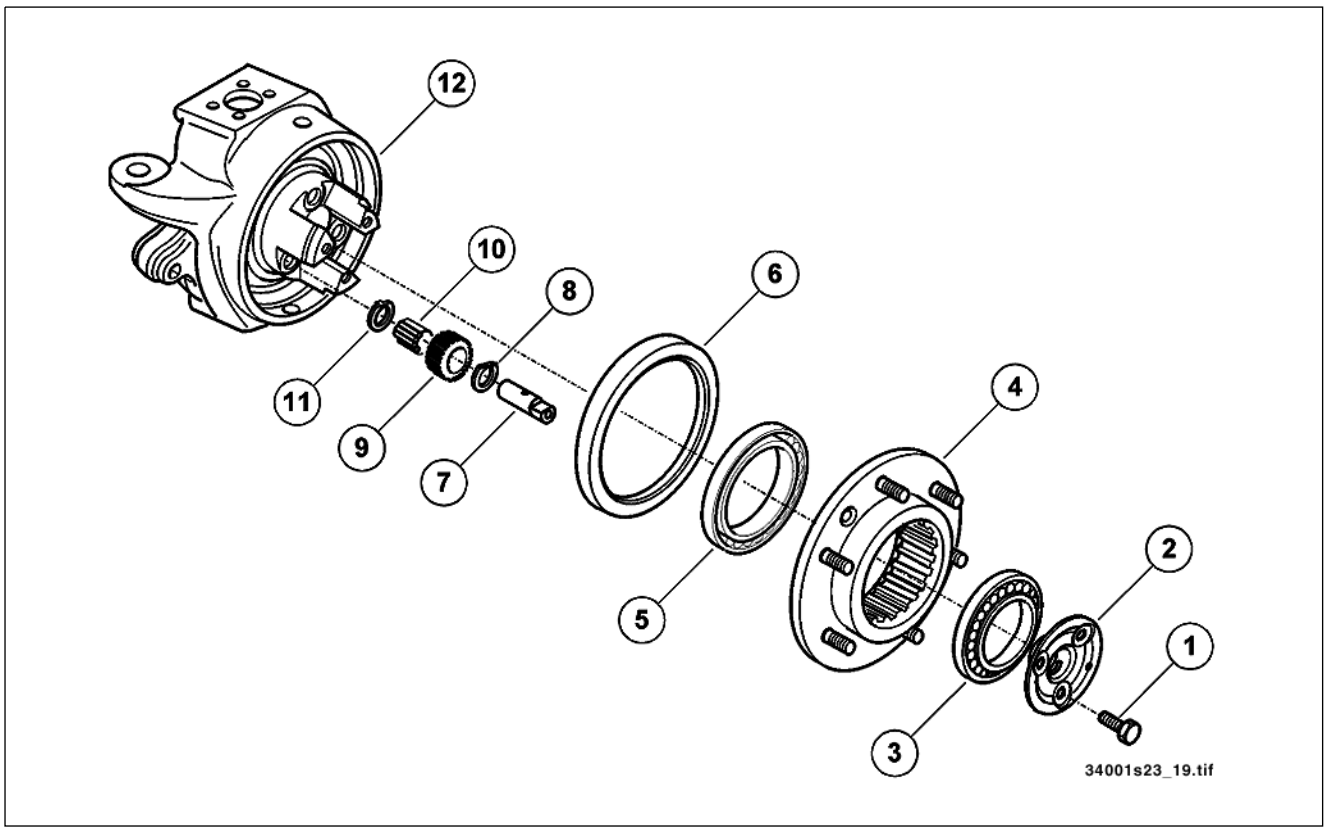

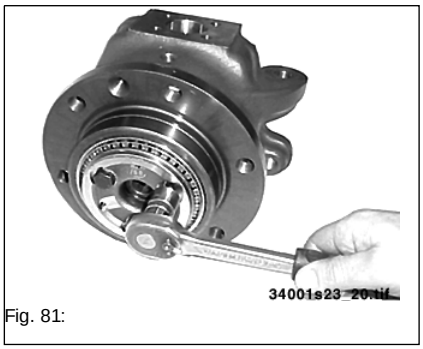

Fig. 81:

☞ Remove screws **1** on flange **2**

☞ Remove the flange

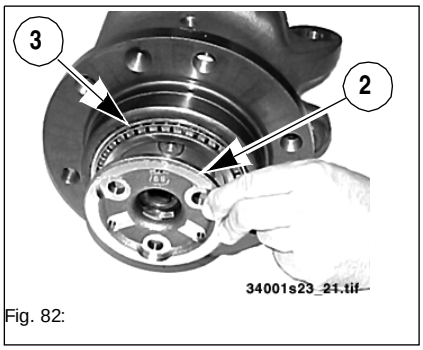

Fig. 82:

☞ Remove flange **2** and bearing **3**

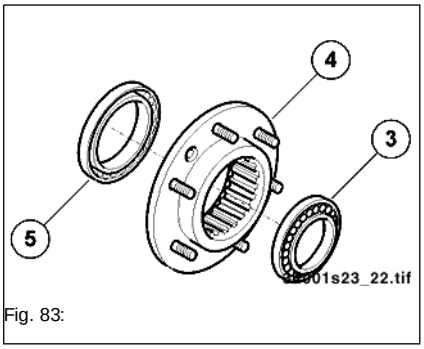

Fig. 83:

☞ Remove hub **4** with two mounting levers

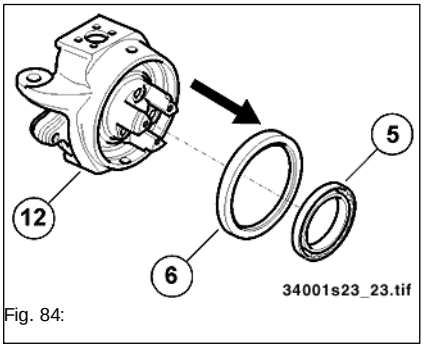

Fig. 84:

☞ Press cassette-type sealing ring **6** out of housing **12** with a mounting lever

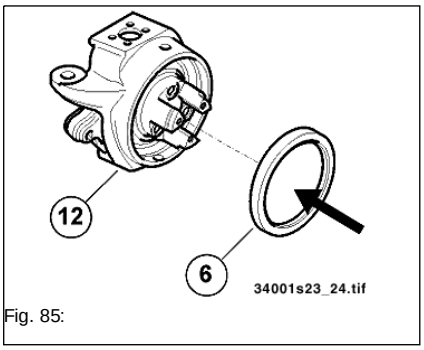

Fig. 85:

☞ Insert cassette-type sealing ring **6** into housing **12** with an adapter

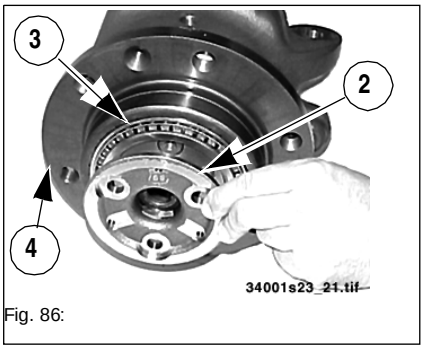

Fig. 86:

☞ Mount wheel hub **4**, bearing **3** and flange **2**

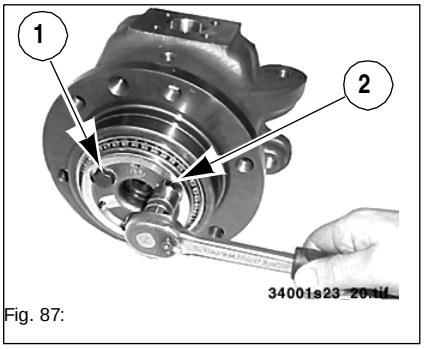

Fig. 87:

☞ Mount flange **2** with screws **1**
(observe the torque – see *Tightening values (Nm) model 340-01* on page 6-3)

6.5.5 Sealing work: axle carrier

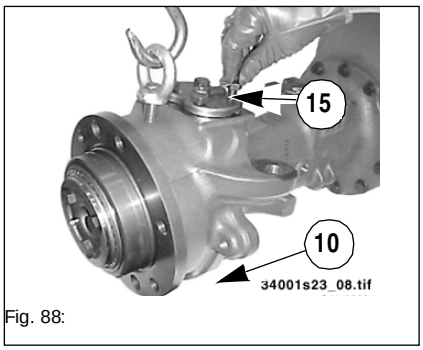

Fig. 88:

☞ Mount the eyebolt for lifting the planetary drive

☞ Remove screws **10**/**15**

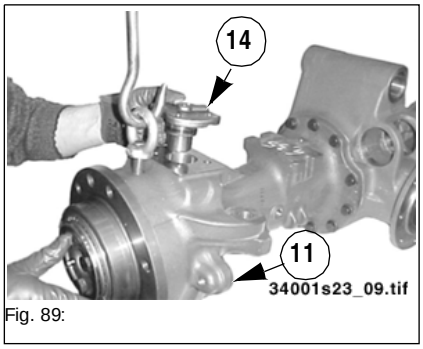

Fig. 89:

☞ Extract bearing pins **14** (upper) and **11** (lower)

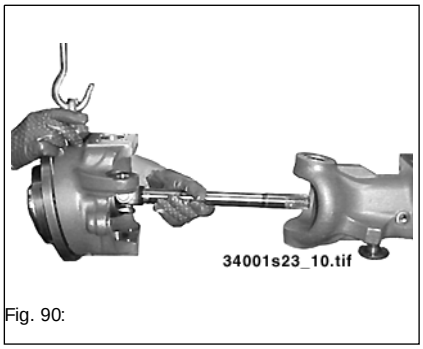

Fig. 90:

☞ Carefully remove the planetary drive with the double cardan shaft from the axle carrier

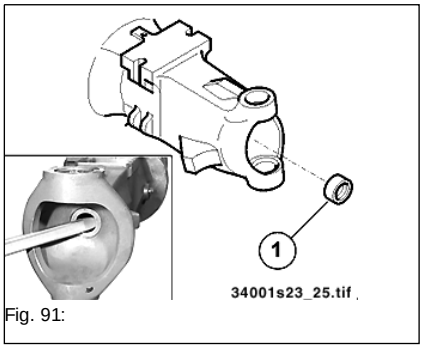

Fig. 91:

☞ Remove rotary shaft seal **1** in the axle carrier

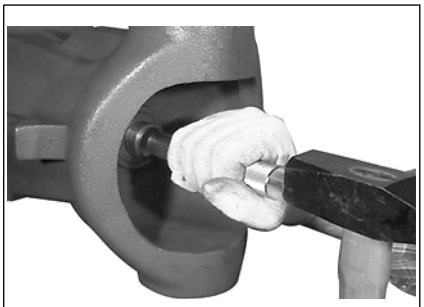

Fig. 92:

☞ Fill the sealing ring grease chamber of rotary shaft seal **1** ¾ full with grease

☞ Fit rotary shaft seal **1** with an adapter

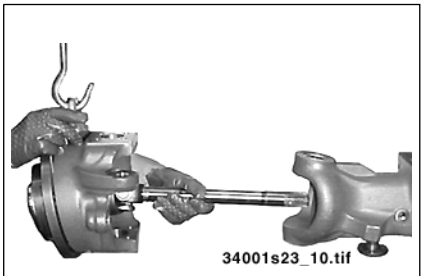

Fig. 93:

Caution!

The rotary shaft seal can be damaged when fitting the planetary carrier.

☞ *Wrap thin protective tape around the profile of the double cardan shaft, so that the tape can be removed after assembly.*

☞ Insert the planetary carrier with the double cardan shaft into the axle carrier

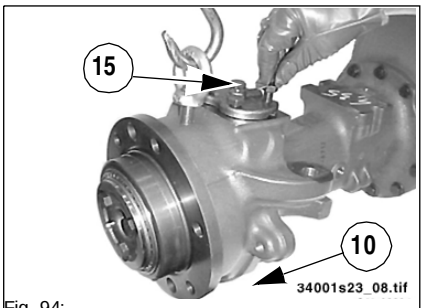

Fig. 94:

Do not use the existing wave spring washers as spacers

Observe the following during assembly:

☞ Fit the thick wave spring washer above

☞ Fit the thin wave spring washer below

☞ Mount king pins **11** / **14** and secure them with screws **10** / **15**
(observe the torque – see *Tightening values (Nm) model 340-01* on page 6-3)

☞ Remove the protective tape from the double cardan shaft

6.5.6 Sealing work: axle carrier – differential housing models 340-01/341-01/341-02

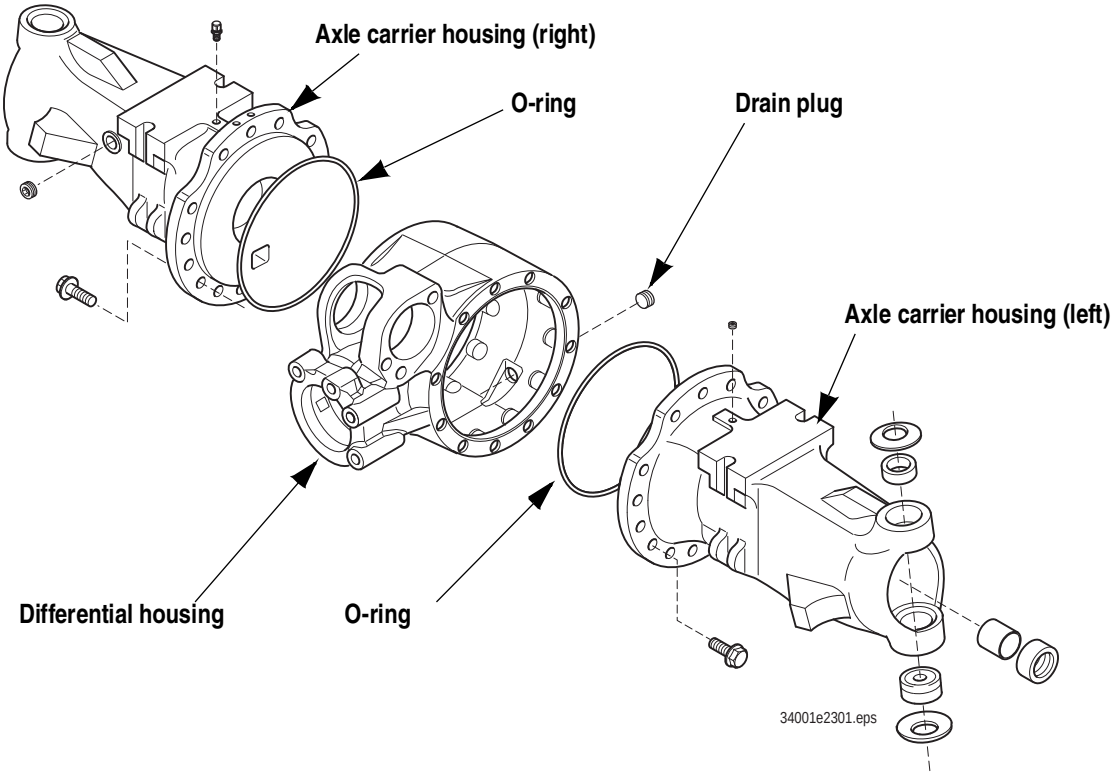

Danger!

Careful when removing the axle carrier housing –

Danger of personal injury!

☞ *Place the axle on a suitable support to safely prop the differential and axle carrier after separating them.*

☞ Drain the oil

☞ Remove the screws (axle carrier)

☞ Remove the axle carrier from the differential housing

☞ Check the O-ring and replace it if necessary

☞ Assembly in the reverse order

6.5.7 Sealing work: gearbox – input flange models 340-01/341-01/341-02

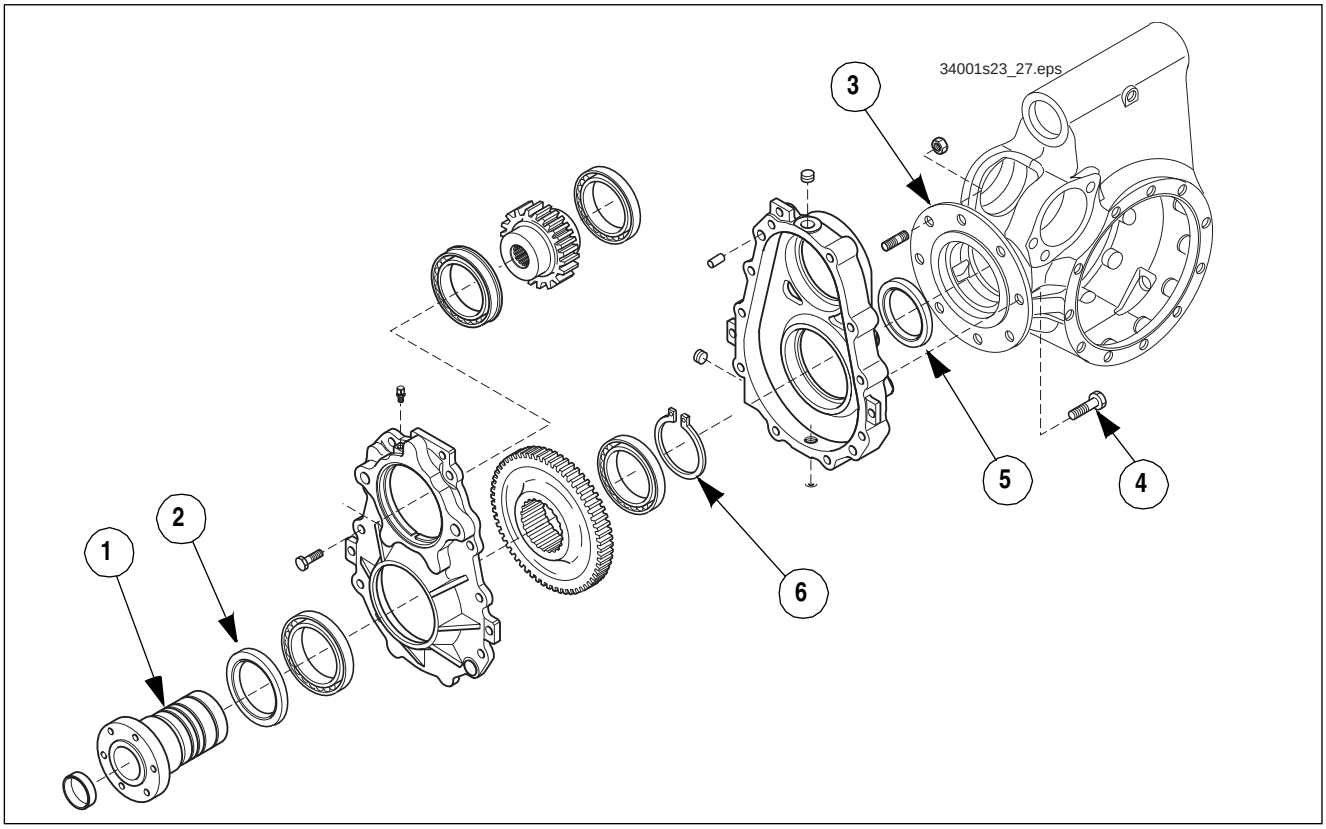

☞ Proceed as follows:

- Remove the HP flexible hoses from the hydraulic motor
- Remove the hydraulic motor from the gearbox housing
- Drain the oil from the gearbox housing
- Remove fastening screw **4**
- Remove the complete gearbox from the gearbox housing
- Remove circlip **6** with suitable tools
- Extract input shaft **1** from the gearbox with suitable tools
- Remove rotary shaft seals **2** and **5**
- Fit rotary shaft seals **2** and **5** with an adapter
- Mount the gearbox in the reverse order

  ➥ Torques – see *Tightening values (Nm) model 340-01* on page 6-3

6.6 Overview: Self-locking differential models 340-01 / 341-01 / 341-02

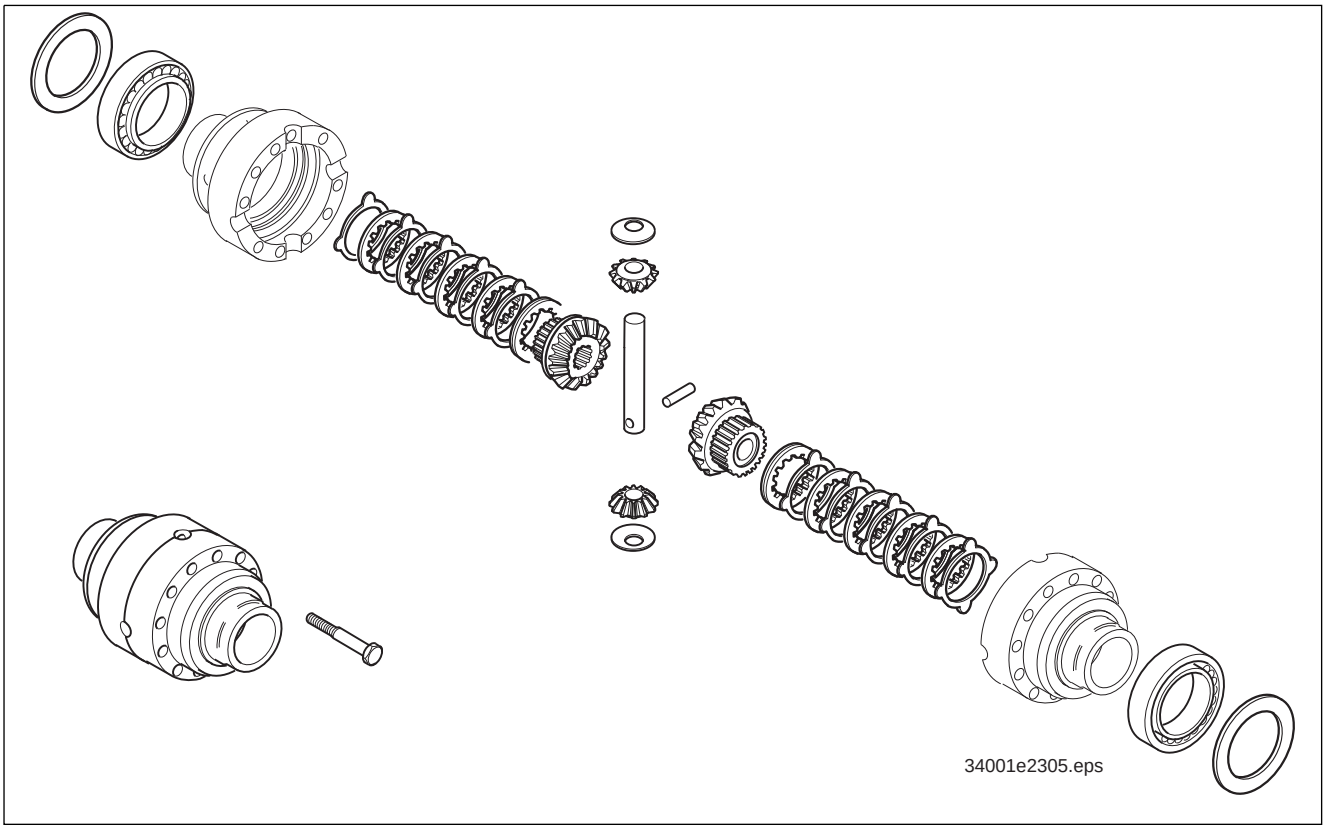

- The self-locking differentials are fitted in the front and rear axles
- 10 outside discs
- 8 inner discs
- Efficiency 45%

6.7 Oil change and check model 341-01 / 341-02

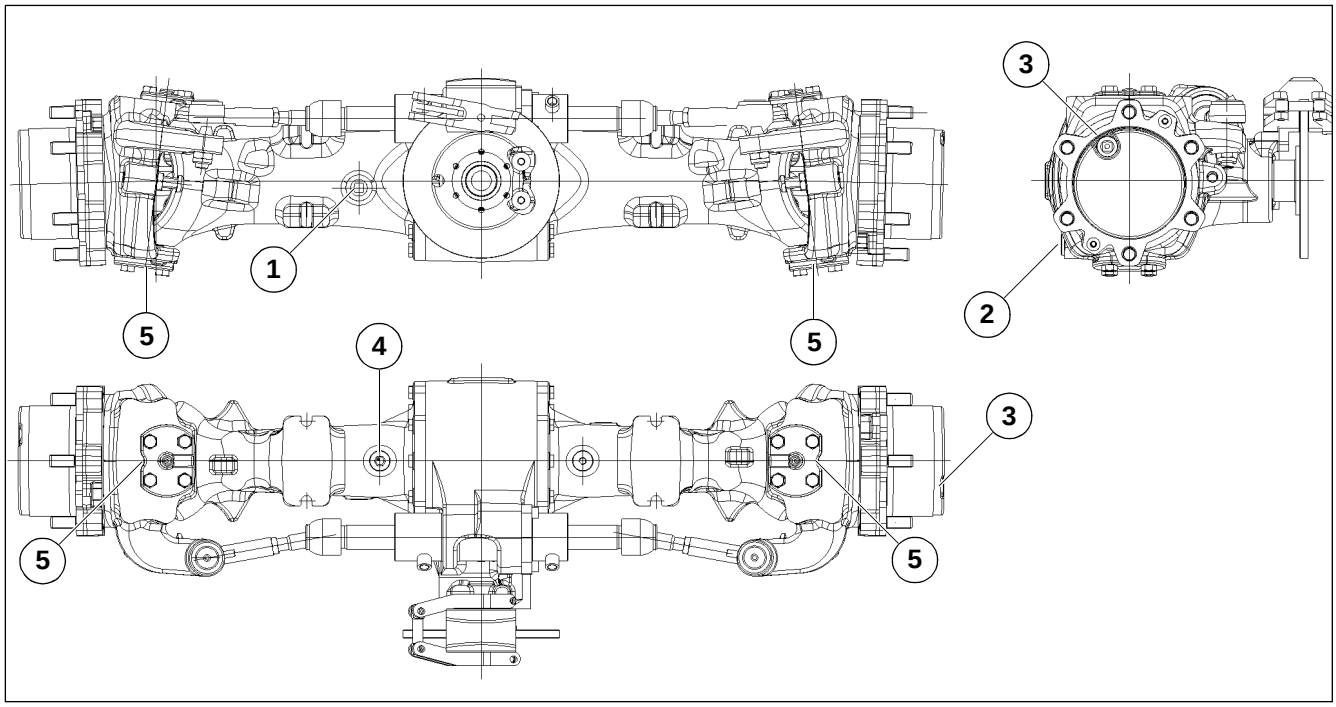

Pos	Description
1	Fill and check plug – axle tube
2	Drain plug – differential
3	Fill, check and drain plug – planetary drive
4	Breather
5	Lubrication points

6.8 Tightening values model 341-01/341-02

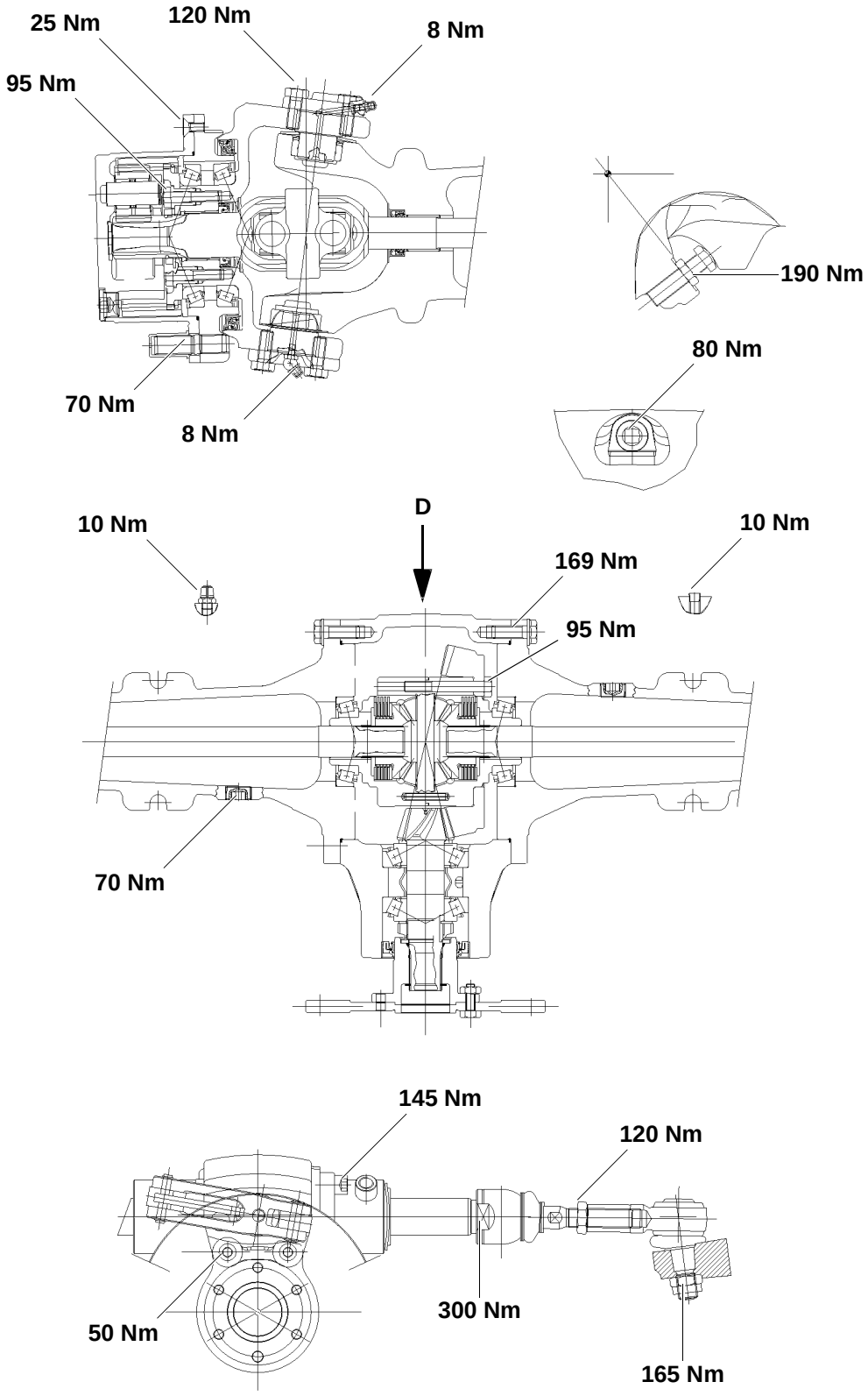

6.9 Screw connections model 341-01/341-02

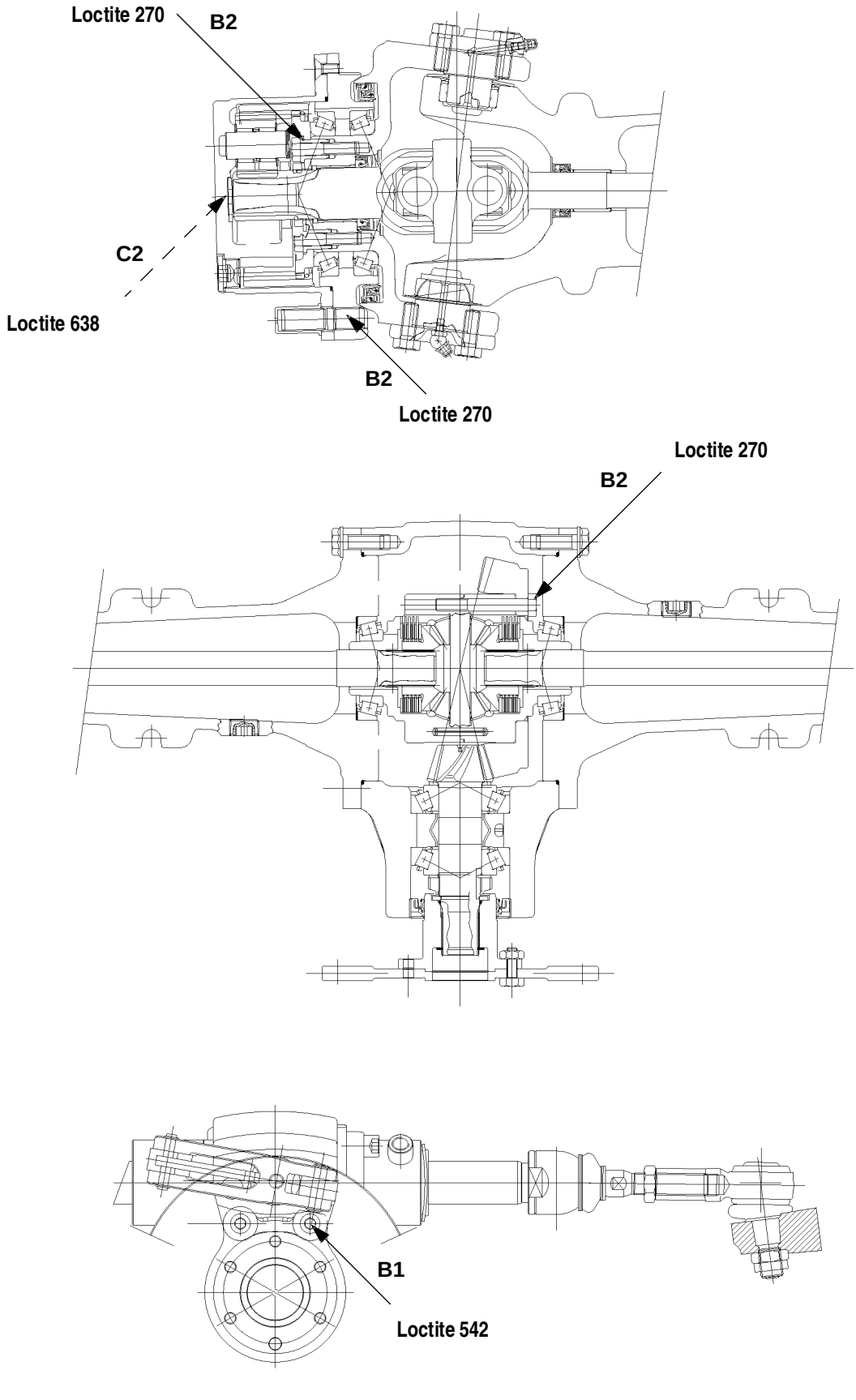

6.10 Overview: Planetary drive model 341-01/341-02

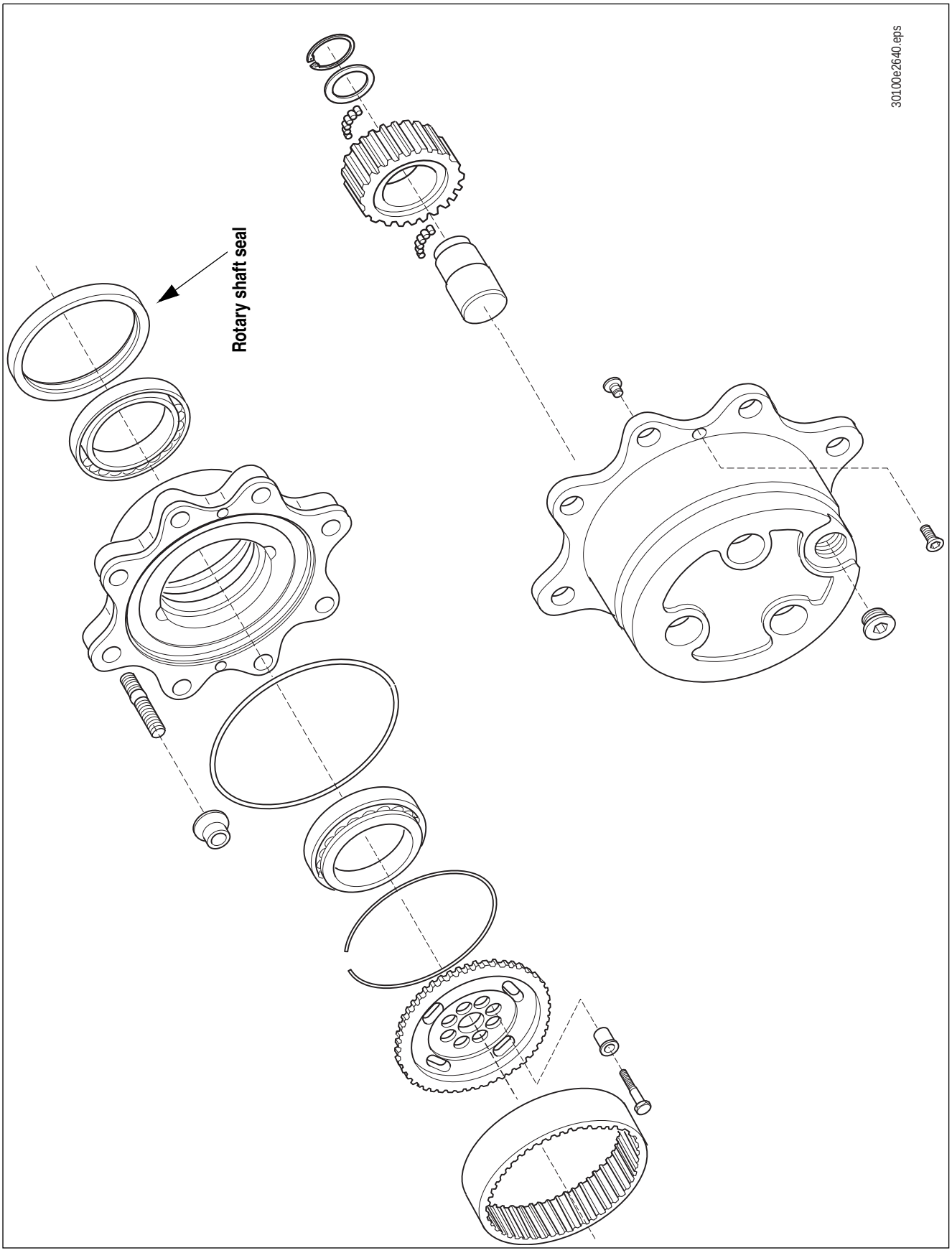

6.11 Input shaft – differential model 341-01/341-02: overview

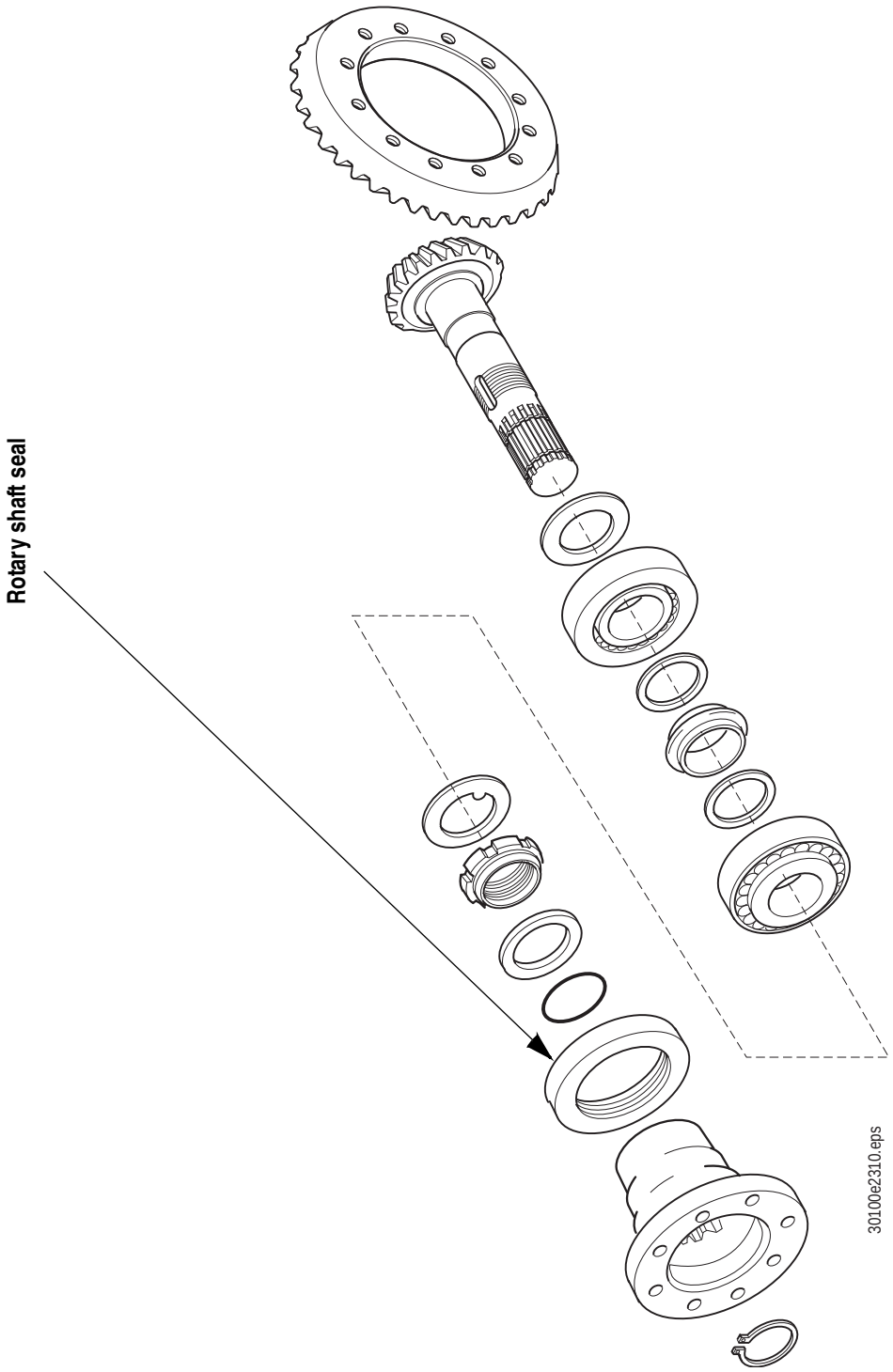

6.12 Sealing work: planetary drive and wheel hub model 341-01/341-02



Fig. 95: Draining the oil

- Turn the plug on the planetary drive fully to the top before draining the oil
- Slightly slacken the plug
  ➥ This reduces possible overpressure
- Turn the bore on the planetary drive to the lowest position
- Remove the plug and drain the oil

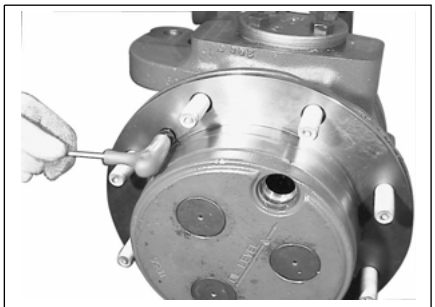

Fig. 96: Removing the planetary carrier

- Remove the fastening screws on the wheel hub assembly



Fig. 97: Removing the satellite carrier

- Remove the satellite carrier from the planetary drive and check for wear
- Clean the sealing surfaces
- Check the O-ring and replace it if necessary

6.12.1 Removing the wheel hub assembly



Fig. 98: Wheel hub assembly

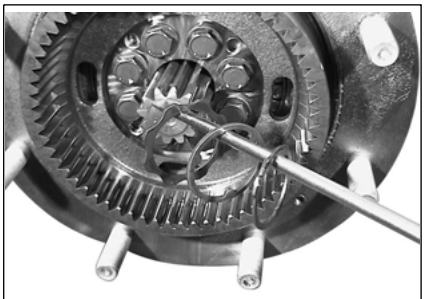

Fig. 99: Wheel hub assembly



Fig. 100: Wheel hub assembly

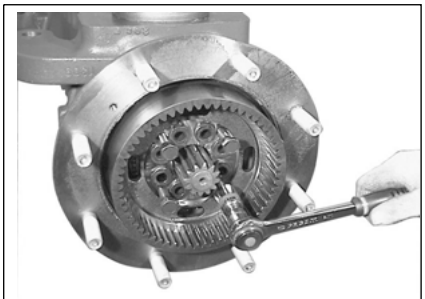

Fig. 101: Wheel hub assembly

Danger!

Careful when removing the wheel hub assembly –

Danger of personal injury!

☞ Use a strap or cable to secure the wheel hub assembly onto a lifting tackle or other lifting gear to avoid damage or personal injury

- Remove the circlip.
- Remove the plain washers from the axle shaft
- Slacken and remove the screws from the wheel hub assembly
- Screw in two of the screws that have been removed into the extraction bores



Fig. 102: Wheel hub assembly

- Remove the wheel hub assembly

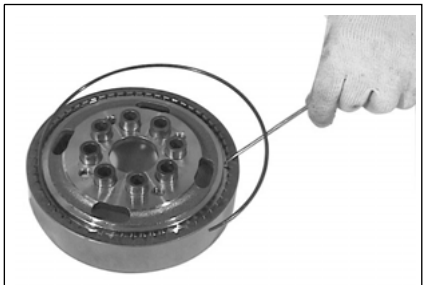

Fig. 103: Internal-geared wheel retaining ring

- Remove the circlip
- Remove the internal-geared wheel from the internal-geared wheel hub
- Check parts for wear, replace if necessary



Fig. 104: Internal-geared wheel hub

Caution!

Before removing the wheel hub:

☞ *Protect the inside bearing race on the steering stub*

- Remove the wheel hub from the planetary carrier by means of a plastic or aluminium hammer

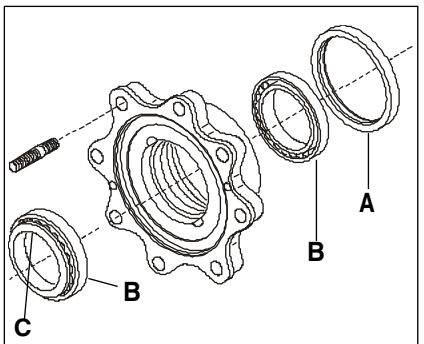

Fig. 105: Wheel hub housing

- Place the wheel hub on a level surface
- Remove rotary shaft seal (**A**)

Caution!

The rotary shaft seal is damaged as you remove it and must be replaced by a new one

- Remove bearing race (**B**)
- Extract bearing race (**C**) from the steering stub by means of a commercially available extraction tool
- Check parts for wear, replace if necessary

6.12.2 Assembling the wheel hub assembly



Fig. 106: Wheel hub

Danger!

Careful when working with an adapter and a hammer –

Danger of personal injury!

☞ *Wear protective gloves*

- Position the wheel hub housing on a bench
- Mount the bearing races of the taper roller bearings
- Apply a sealing compound to the outside sealing surface of the rotary shaft seal

Insert the rotary shaft seal with an adapter

- Mount taper roller bearing (**A**) on the planetary carrier
- Place wheel hub (**B**) on the planetary carrier
- Mount taper roller bearing (**C**)

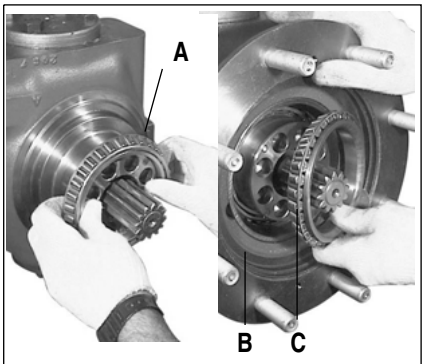

Fig. 107: Assembling the taper roller bearing



Fig. 108: Assembling the internal-geared wheel

- Insert the bushing in the internal-geared wheel hub by means of an adapter
  ➥ At least two of the bushings (diagonally opposed) must protrude slightly beyond the flange surface of the internal-geared wheel. They are used for centering the internal-geared wheel hub assembly as you mount it

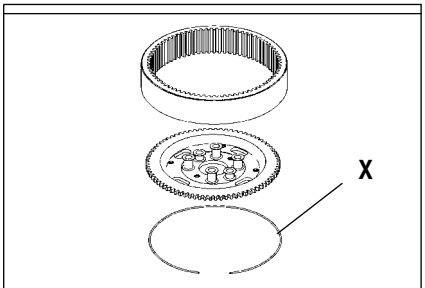

Fig. 109: Assembling the internal-geared wheel wheel

- Preassemble the internal-geared wheel hub and the internal-geared wheel with the circlip (**X**)

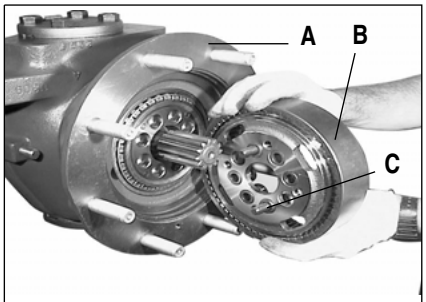

Fig. 110: Assembling the internal-geared wheel hub assembly

- Mount the internal-geared wheel hub assembly (**B)** on the wheel hub (**A)**

The two projecting bushings (**C)** are used for centering the assembly

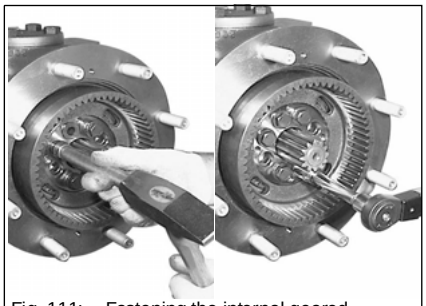

Fig. 111: Fastening the internal-geared wheel hub

- Press in all bushings by means of an adapter

Mount the screws and tighten them with the prescribed torque
– see chapter 6 *"Tightening values model 341-01/341-02"* on page 6-19

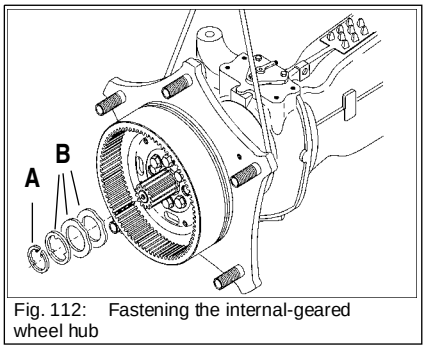

Fig. 112: Fastening the internal-geared wheel hub

- Mount the plain washers onto the axle shaft with elastic packing rings (**B**)
- Mount the circlip (**A**)

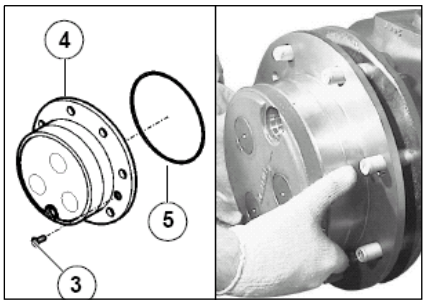

- Mount O-ring **5** and planetary carrier **4**
- Screw in fastening screws **3**

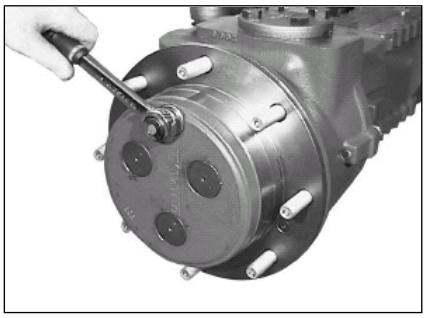

- Fill in oil and check the oil level

6.13 Sealing work: planetary carriery, axle tube model 341-01/341-02

6.13.1 Removing the planetary carrier

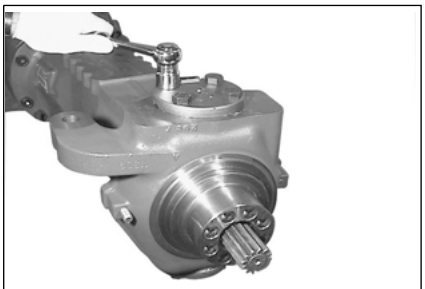

Fig. 113: Planetary carrier

- Remove the screws on the upper and lower bearing pins



Fig. 114: Removing the planetary carrier

Danger!

Careful when removing the bearing pins –

Danger of personal injury!

☞ Use a strap or cable to secure the planetary carrier onto a lifting tackle or other lifting gear to avoid damage or personal injury

- Remove the bearing pins
- Extract the planetary carrier from the axle housing

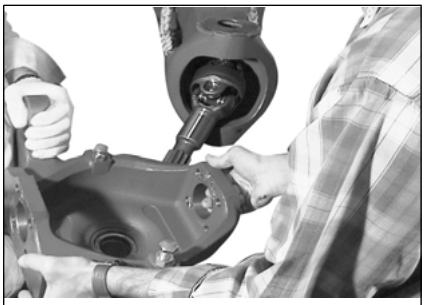

Fig. 115: Removing the planetary carrier housing

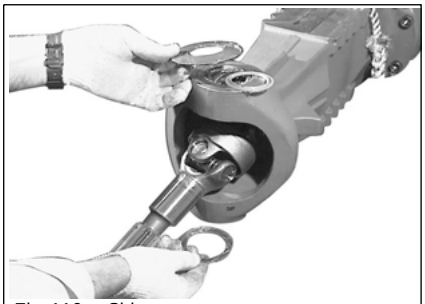

Fig. 116: Shims

- Remove the belleville spring washers and the shims on the upper and lower side of the axle housing

  ➥ Check the belleville spring washers and the shims, replace if necessary

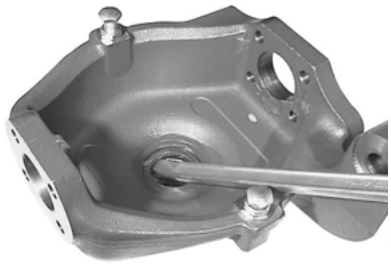

Fig. 117: Replacing the sealing ring

- Remove the rotary shaft seal with a suitable tool

Caution!

The rotary shaft seal is damaged as you remove it and must be replaced by a new one

6.13.2 Assembly work: planetary carrier – axle tube



Fig. 118: Inserting the sealing ring

Danger!

Careful when working with an adapter and a hammer –

Danger of personal injury

☞ *Wear protective gloves*

- Mount the bushing with an adapter
- Fill the sealing ring grease chamber of rotary shaft seal ¾ full with grease
- Apply a sealing compound to the outside sealing surface of the rotary shaft seal
- Insert the rotary shaft seal into the planetary carrier housing with an adapter
- Insert the washers in the upper side of the planetary carrier bearing
- Apply a thin coat of suitable grease to the planetary carrier bearing
- Place the belleville spring washers on the planetary carrier bearing



Fig. 119: Planetary carrier bearing



Fig. 120: Axle housing sealing ring

- Use an adapter to mount the bearing bushing in the axle tube
- Fill the sealing ring grease chamber of rotary shaft seal ¾ full with grease
- Apply a sealing compound to the outside sealing surface of the rotary shaft seal
- Fit the rotary shaft seal with an adapter

Caution!

The rotary shaft seal can be damaged when fitting the double cardan shaft.

☞ *Wrap thin protective tape around the profile of the cardan shaft, so that the tape can be removed after assembly.*

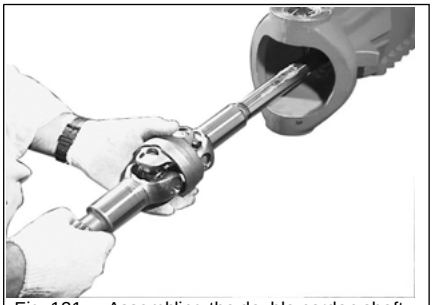

Fig. 121: Assembling the double cardan shaft

- Apply grease generously to the bushing and the sealing lip
- Insert the double cardan shaft in the axle housing

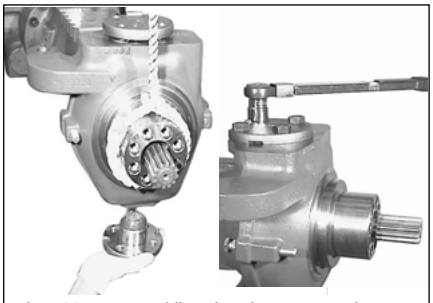

Fig. 122: Assembling the planetary carrier

Danger!

Careful when mounting the planetary carrier –

Danger of personal injury!

☞ Use a strap or cable to secure the planetary carrier onto a lifting tackle or other lifting gear to avoid damage or personal injury

- Wrap a thin protective tape around the short profiled side of the cardan shaft
  ➥ This avoids damage to the rotary shaft seal in the planetary carrier
- Make sure the belleville spring washers stay in their correct positions
- Insert the planetary carrier in the axle tube
- Mount the upper and lower bearing pins
- Mount the fastening screws and tighten them with the prescribed torque
  ☞ – see *Tightening values model 341-01/341-02* on page 6-19
- Remove the protective tape from the cardan shaft once the planetary carrier is mounted
- Mount the planetary drive

6.14 Front axle carrier model 341-01/341-02: overview

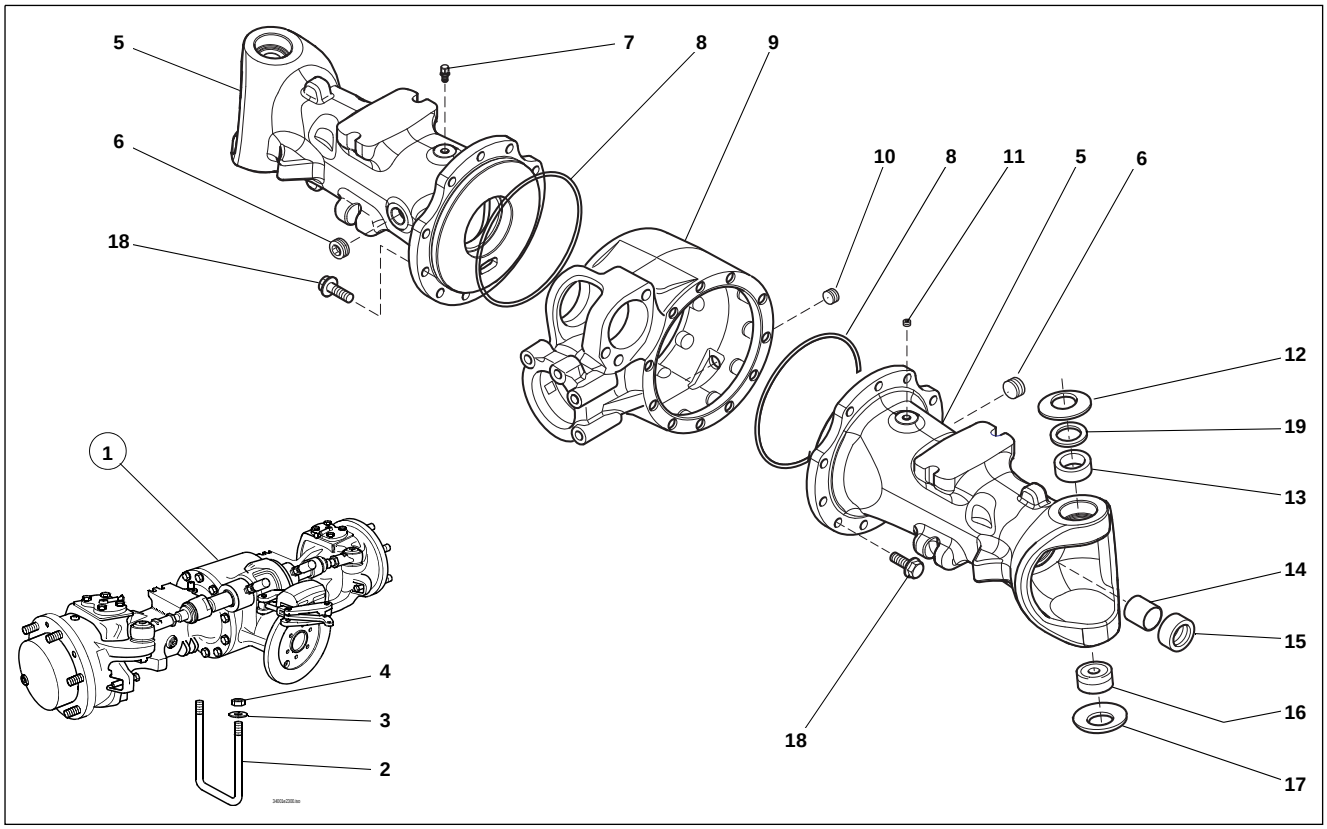

1	Cpl front axle
2	Bow clip
3	Washer
4	Hexagon nut
5	Axle carrier
6	Screw plug
7	Breather
8	O-ring
9	Differential housing
10	Screw plug
11	Plug
12	Wave spring washer

13	Bushing
14	Bushing
15	Circlip
16	Bearing
17	Wave spring washer
18	Screw
19	Spacer washer

6.15 Front axle steering ram model 341-01/341-02: overview

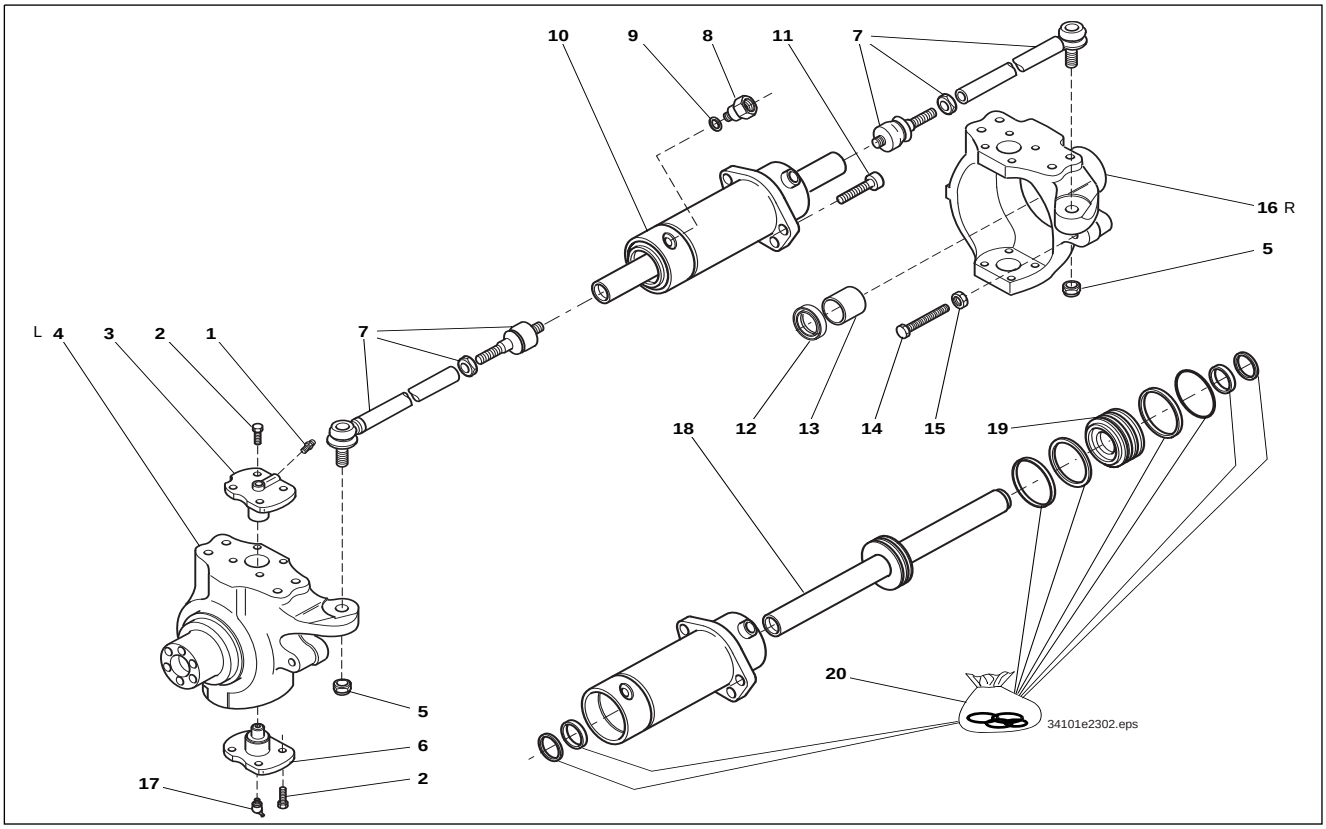

1	Conical grease nipple
2	Screw
3	Bearing pin
4	Planetary carrier
5	Nut
6	Bearing pin
7	Swivel head
8	Screw connection
9	Sealing ring
10	Steering ram
11	Screw

12	Sealing ring
13	Bushing
14	Stop bolt
15	Hexagon nut
16	Planetary carrier
17	Conical grease nipple
18	Piston rod
19	Piston
20	Sealing kit

6.16 Overview: Front axle wheel hub model 341-01 / 341-02

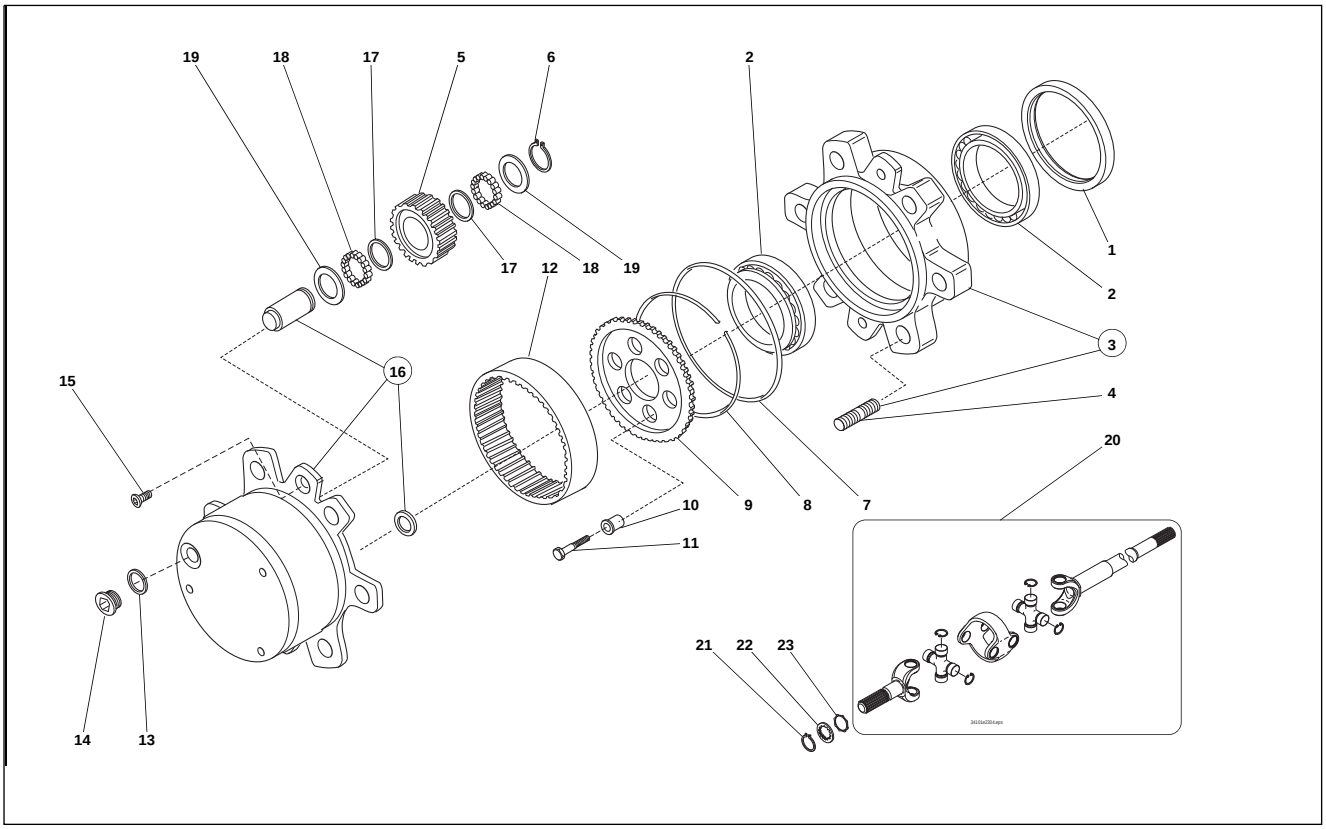

1	Sealing ring
2	Bearing
3	Housing
4	Stud bolt
5	Gear
6	Circlip
7	O-ring
8	Ring
9	Gear
10	Bushing
11	Screw
12	Gear

13	Sealing ring
14	Screw plug
15	Screw
16	Planetary carrier
17	Washer
18	Needle bearing
19	Pressure disc
20	Double cardan shaft
21	Washer
22	Washer
23	Circlip

6.17 Overview: Front axle differential model 341-01 / 341-02

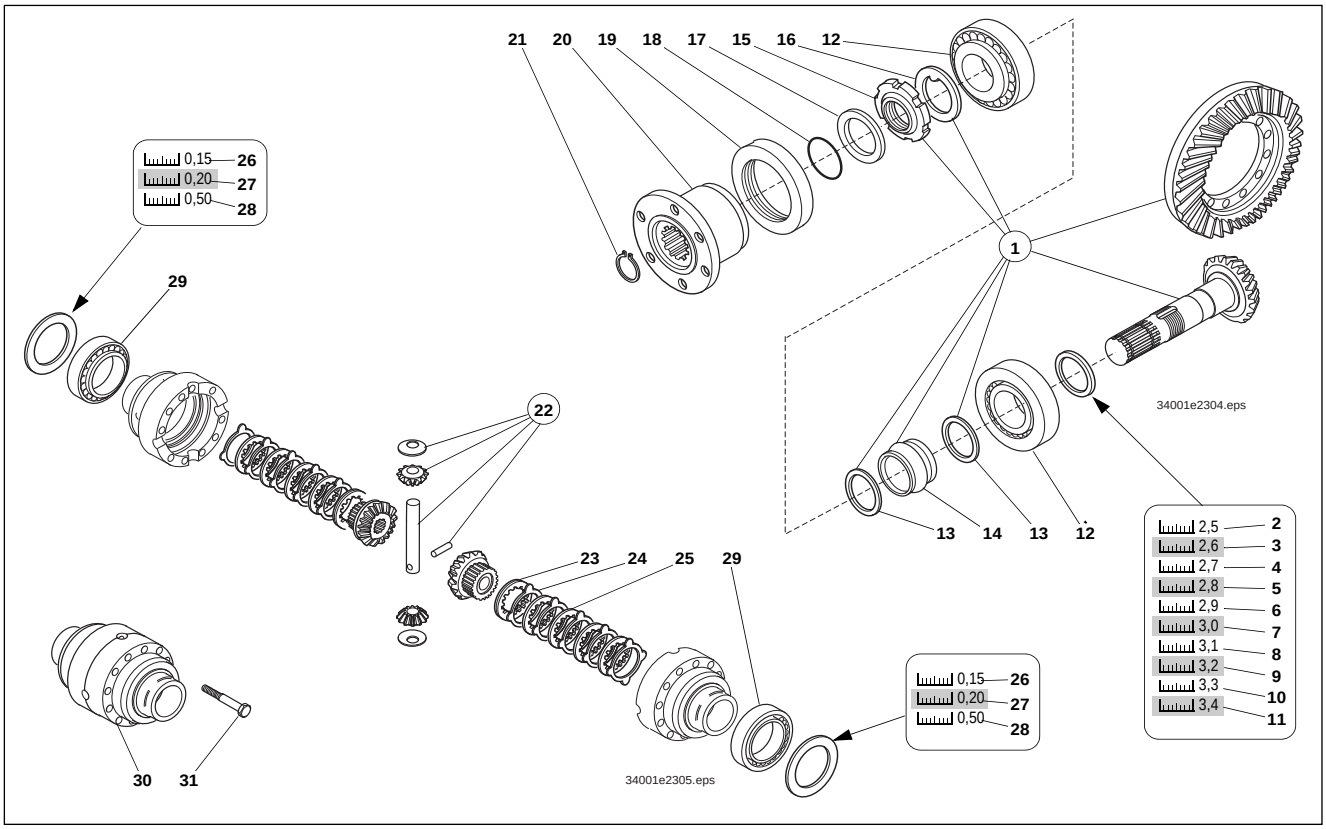

1	Gear drive
2	Spacer
3	Spacer
4	Spacer
5	Spacer
6	Spacer
7	Spacer
8	Spacer
9	Spacer
10	Spacer
11	Spacer
12	Bearing
13	Washer
14	Spacer bushing
15	Slotted nut
16	Tab washer

17	Washer
18	O-ring
19	Circlip
20	Flange
21	Circlip
22	Bevel-gear set
23	Discs
24	Discs
25	Discs
26	Spacer
27	Spacer
28	Spacer
29	Bearing
30	Differential housing
31	Screw

6.18 Overview: Rear axle carrier model 341-01/341-02

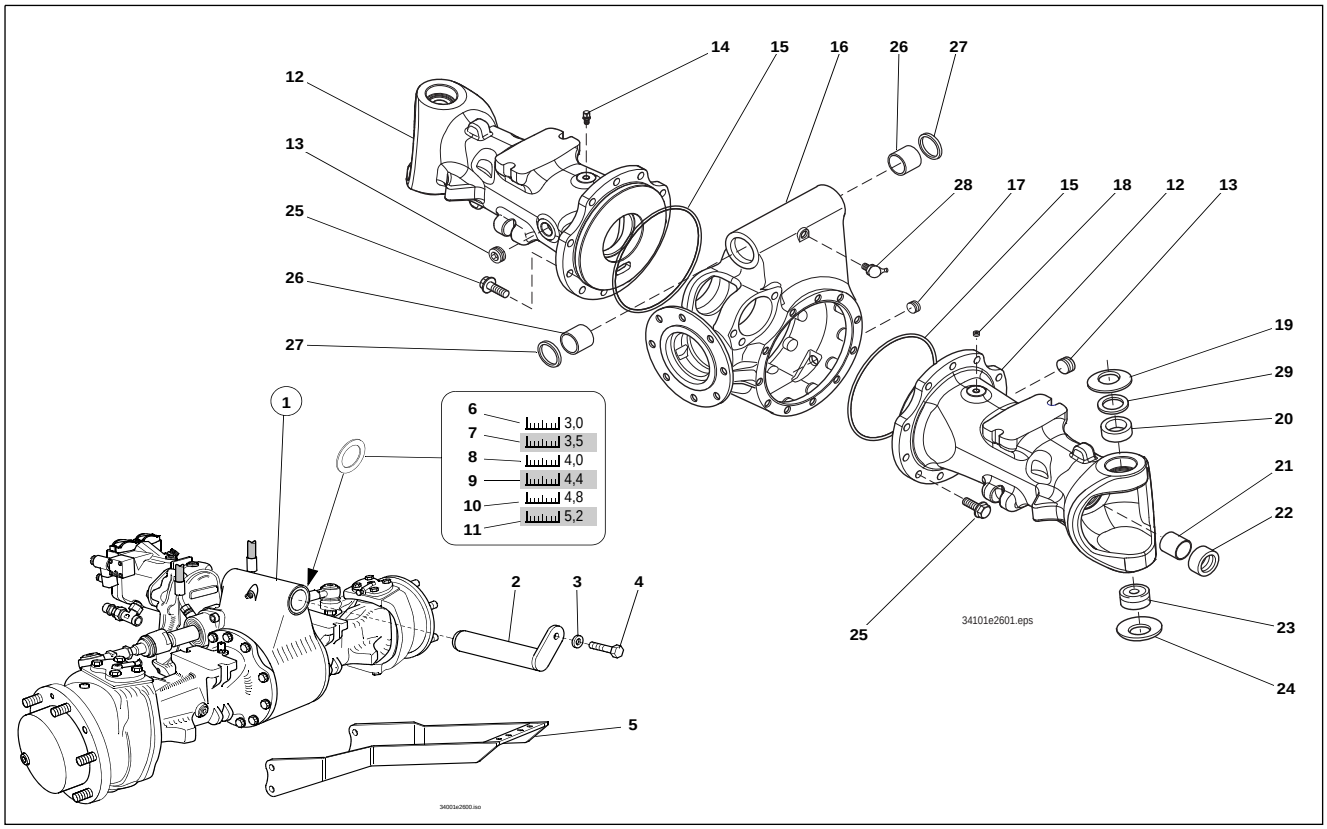

1	Gear drive
2	Spacer
3	Spacer
4	Spacer
5	Spacer
6	Spacer
7	Spacer
8	Spacer
9	Spacer
10	Spacer
11	Spacer
12	Bearing
13	Washer
14	Spacer bushing
15	Slotted nut
16	Tab washer

17	Washer
18	O-ring
19	Circlip
20	Flange
21	Circlip
22	Bevel-gear set
23	Discs
24	Discs
25	Discs
26	Spacer
27	Spacer
28	Spacer
29	Bearing
30	Differential housing
31	Screw

6.19 Overview: Rear axle steering ram model 341-01 / 341-02

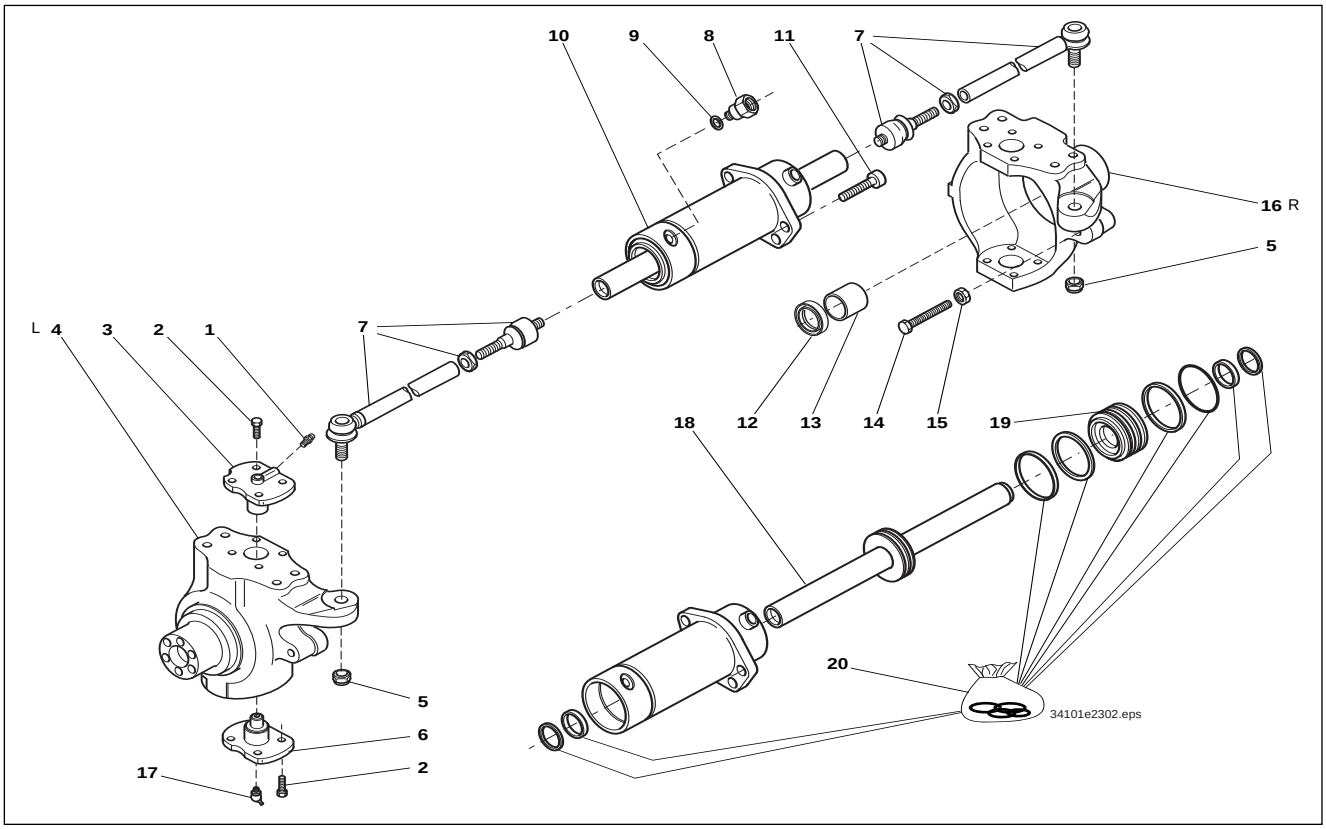

1	Conical grease nipple
2	Screw
3	Bearing pin
4	Planetary carrier
5	Nut
6	Bearing pin
7	Swivel head
8	Screw connection
9	Sealing ring
10	Steering ram
11	Screw
12	Sealing ring

13	Bushing
14	Stop bolt
15	Hexagon nut
16	Planetary carrier
17	Conical grease nipple
18	Piston rod
19	Piston
20	Sealing kit

6.20 Overview: Rear axle wheel hub model 341-01 / 341-02

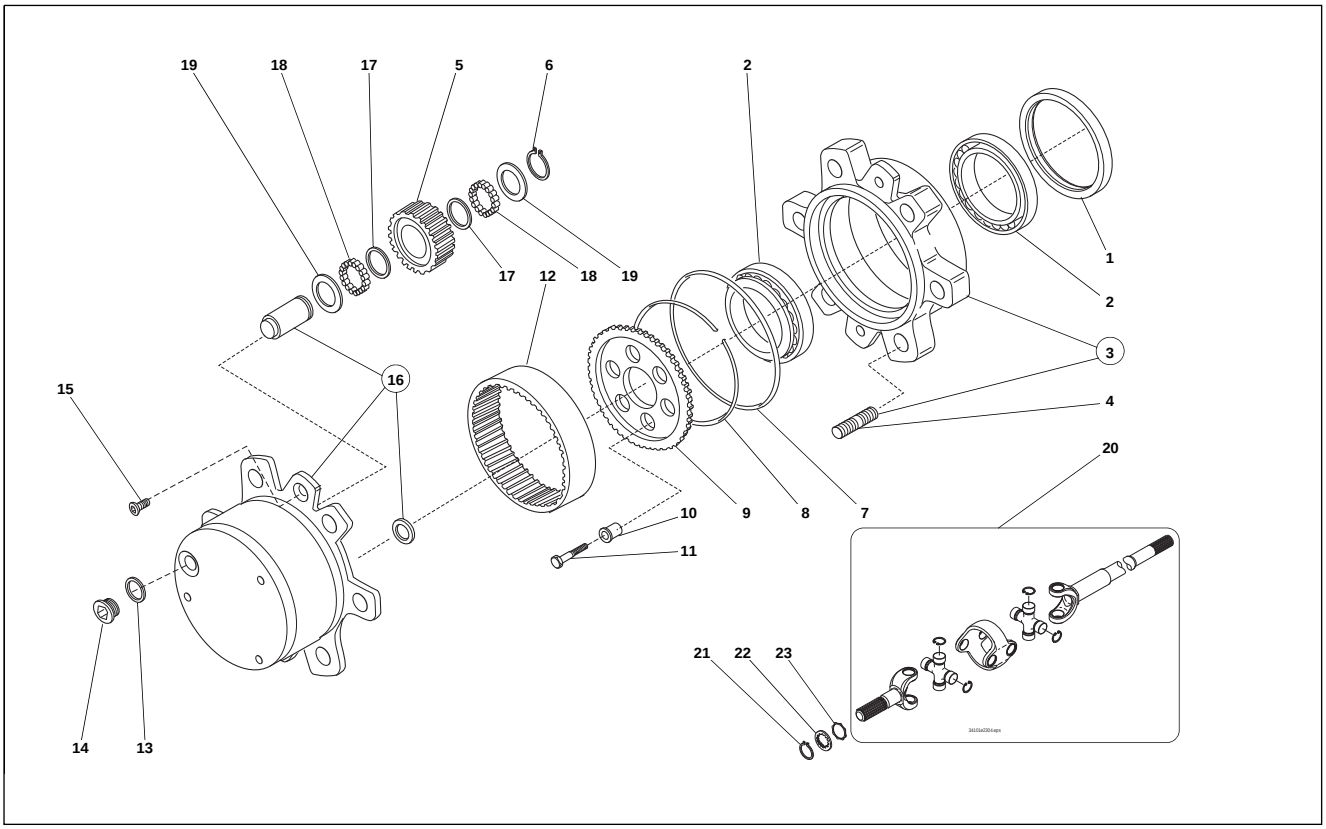

1	Sealing ring
2	Bearing
3	Housing
4	Stud bolt
5	Gear
6	Circlip
7	O-ring
8	Ring
9	Gear
10	Bushing
11	Screw
12	Gear
13	Sealing ring

14	Screw plug
15	Screw
16	Planetary carrier
17	Washer
18	Needle bearing
19	Pressure disc
20	Double cardan shaft
21	Washer
22	Washer
23	Circlip

6.21 Overview: Rear axle differential model 341-01 / 341-02

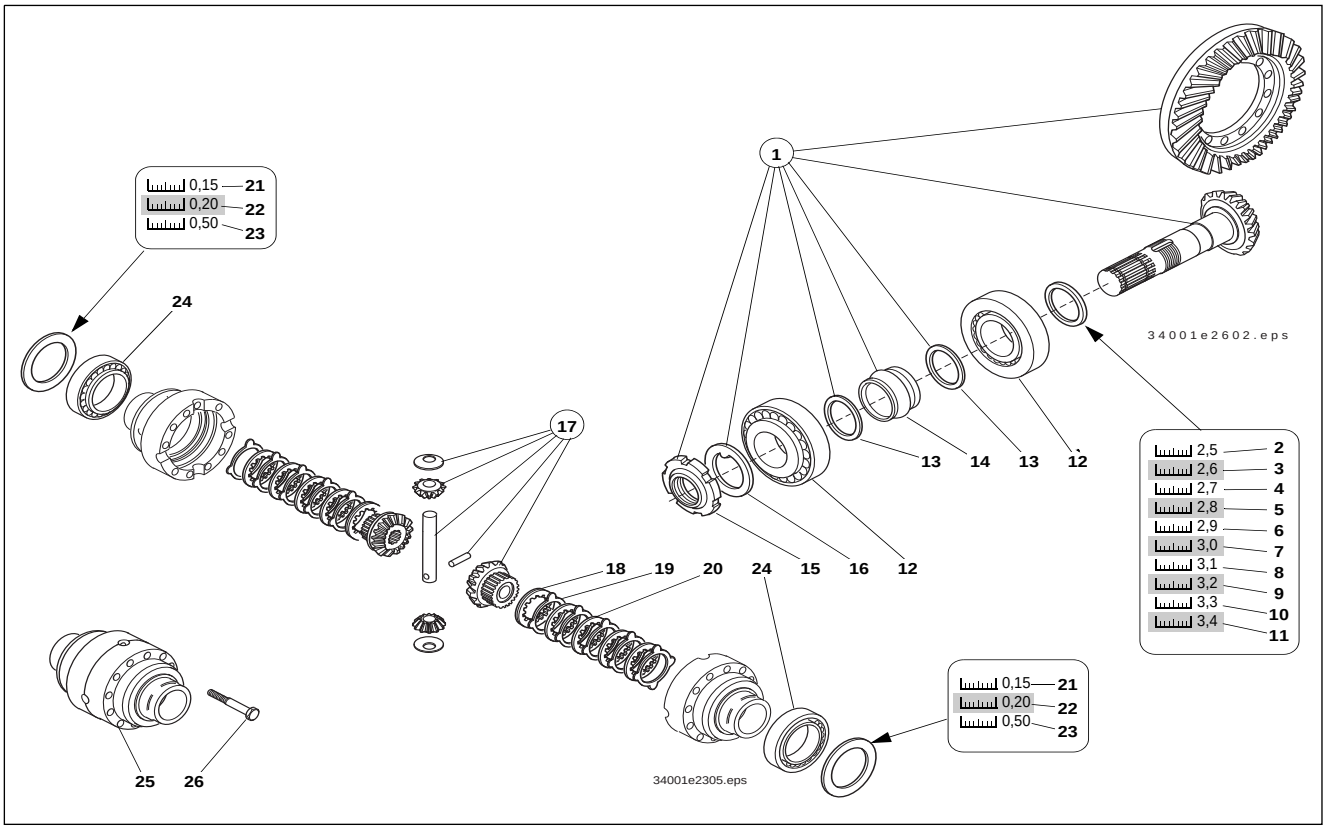

1	Gear drive
2	Spacer
3	Spacer
4	Spacer
5	Spacer
6	Spacer
7	Spacer
8	Spacer
9	Spacer
10	Spacer
11	Spacer
12	Bearing
13	Washer
14	Spacer bushing
15	Slotted nut

16	Tab washer
17	Bevel-gear set
18	Discs
19	Discs
20	Discs
21	Spacer
22	Spacer
23	Spacer
24	Bearing
25	Differential housing
26	Screw

6.22 Overview: 20 kph gearbox model 341-01 / 341-02

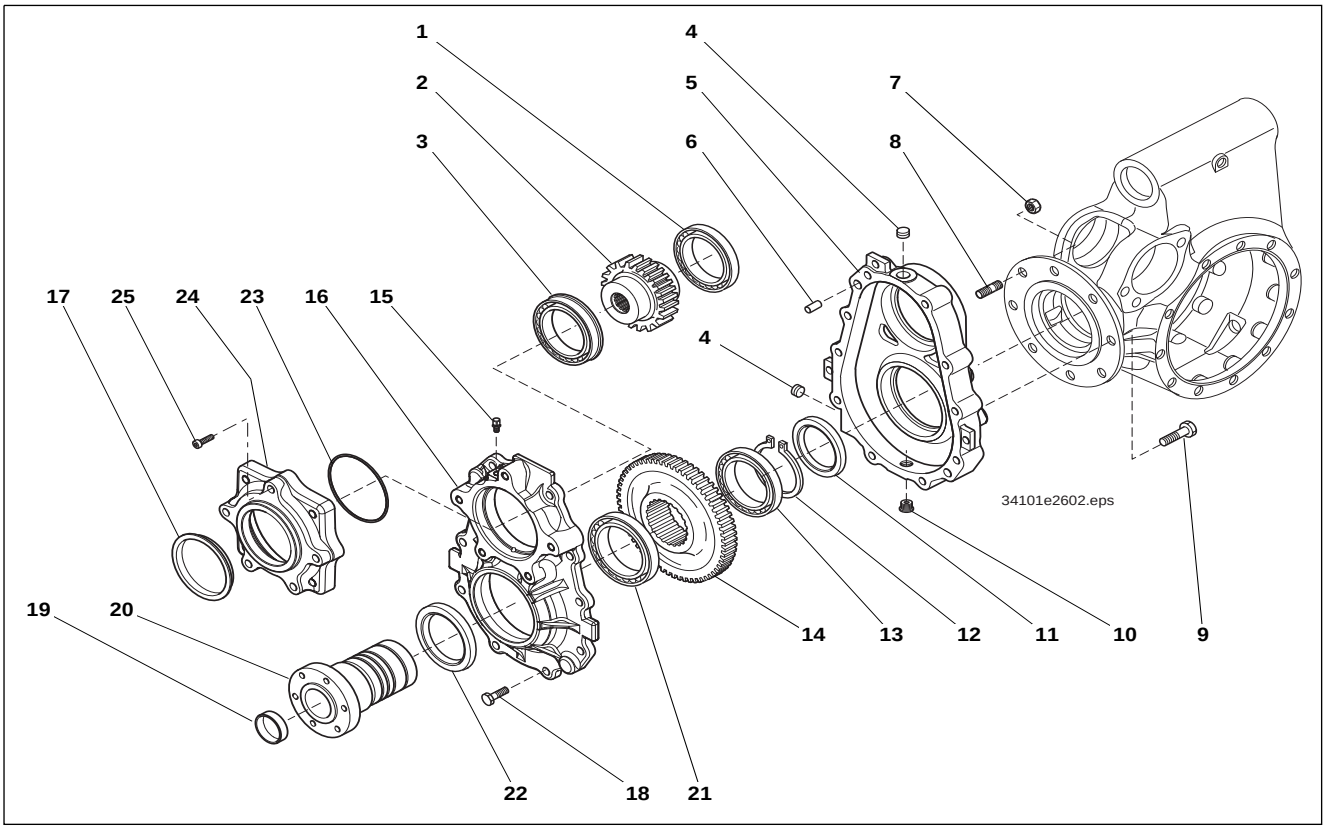

1	Bearing
2	Gear
3	Bearing
4	Screw plug
5	Housing
6	Pin
7	Nut
8	Stud bolt
9	Screw
10	Screw plug
11	Sealing ring
12	Circlip
13	Bearing
14	Gear
15	Breather

16	Flange
17	Plug
18	Screw
19	Plug
20	Shaft
21	Bearing
22	Sealing ring
23	O-ring
24	Flange
25	Screw

6.23 Sealing the gearbox

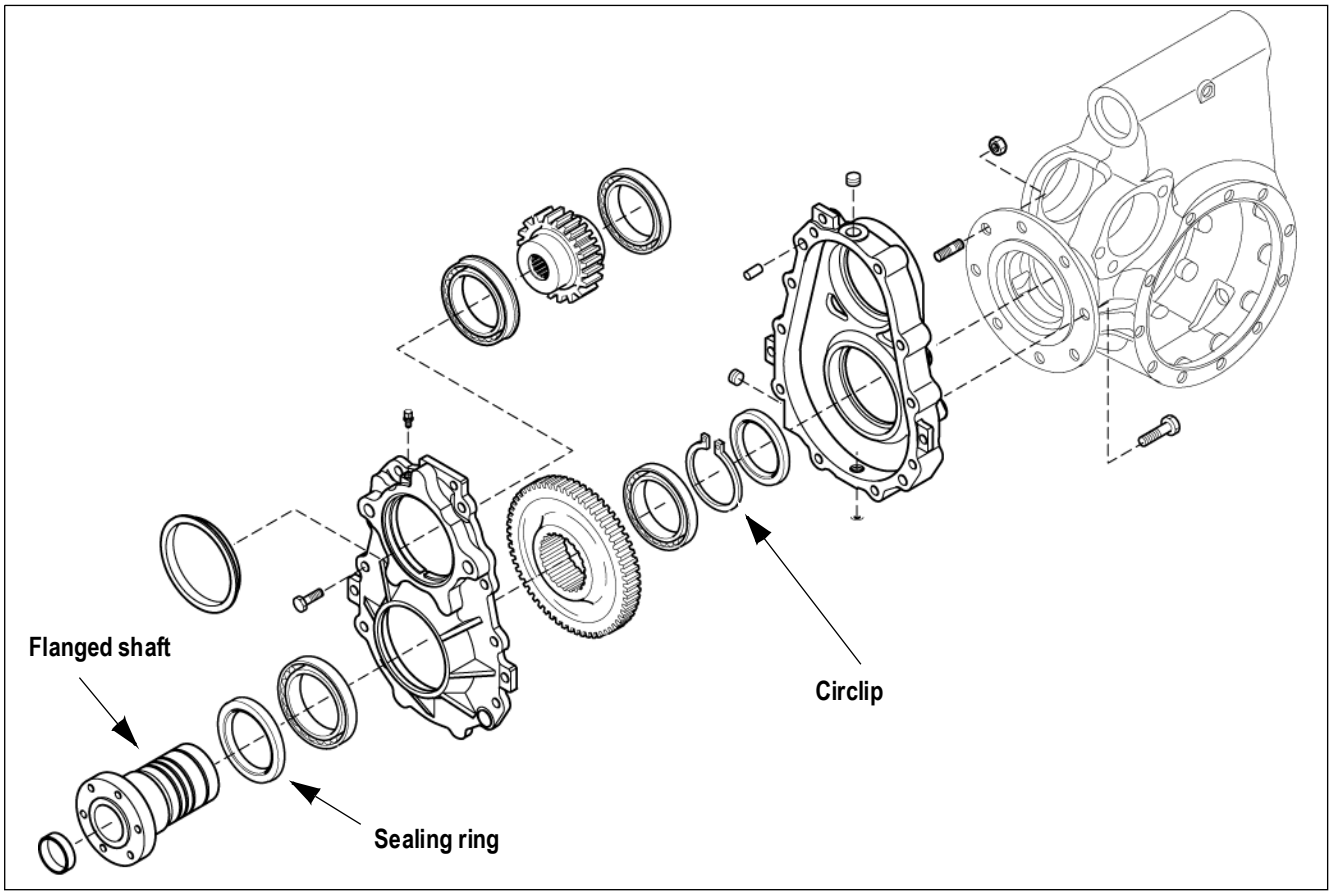

☞ Remove the variable displacement motor
☞ Remove the gearbox from the axle housing
☞ Removing the circlip
☞ Press the flanged shaft out of the housing
☞ Replace the sealing ring
➥ Clean the sealing surface
☞ Assembly in the reverse order

Brakes

7 Brakes

7.1 Brake system overview

Caution!

Do not readjust the handbrake on the cable pull.

☞ – see *Handbrake: readjustment* **on page 7-2**

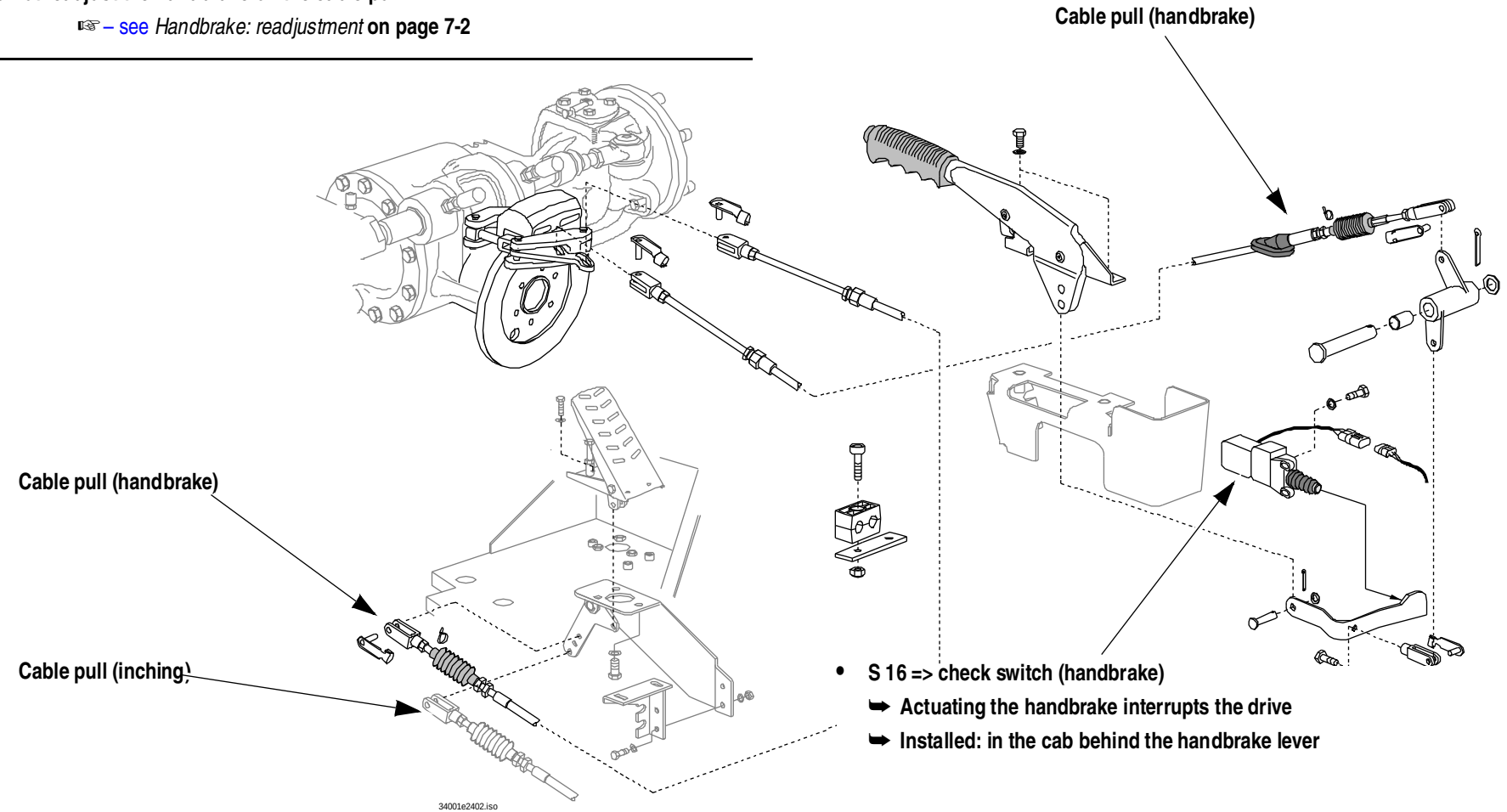

- **S 16 => check switch (handbrake)**
  - ➥ **Actuating the handbrake interrupts the drive**
  - ➥ **Installed: in the cab behind the handbrake lever**

7.2 Handbrake: readjustment

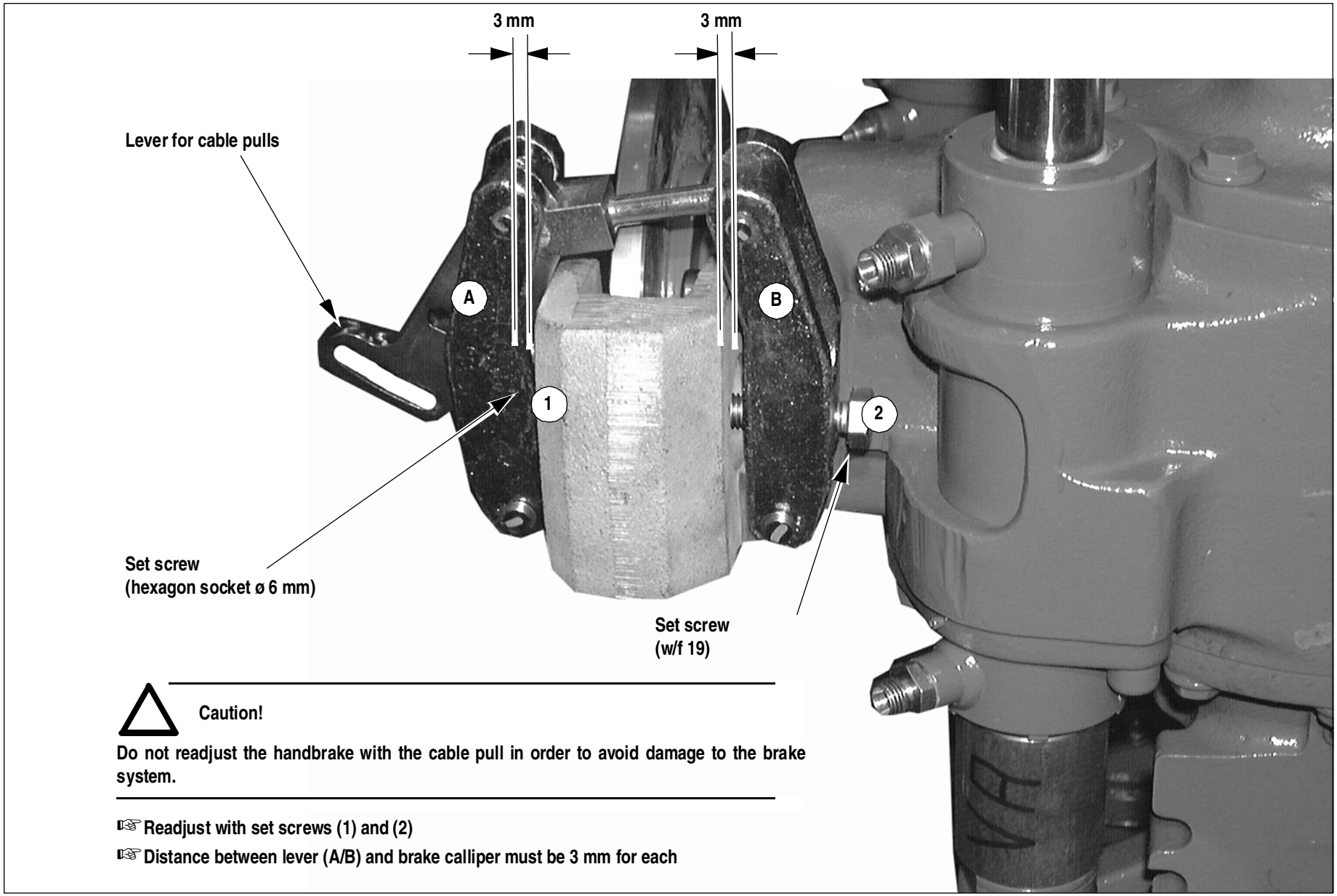

Caution!

Do not readjust the handbrake with the cable pull in order to avoid damage to the brake system.

☞ **Readjust with set screws (1) and (2)**

☞ **Distance between lever (A/B) and brake calliper must be 3 mm for each**

7.3 Replacing brake pads

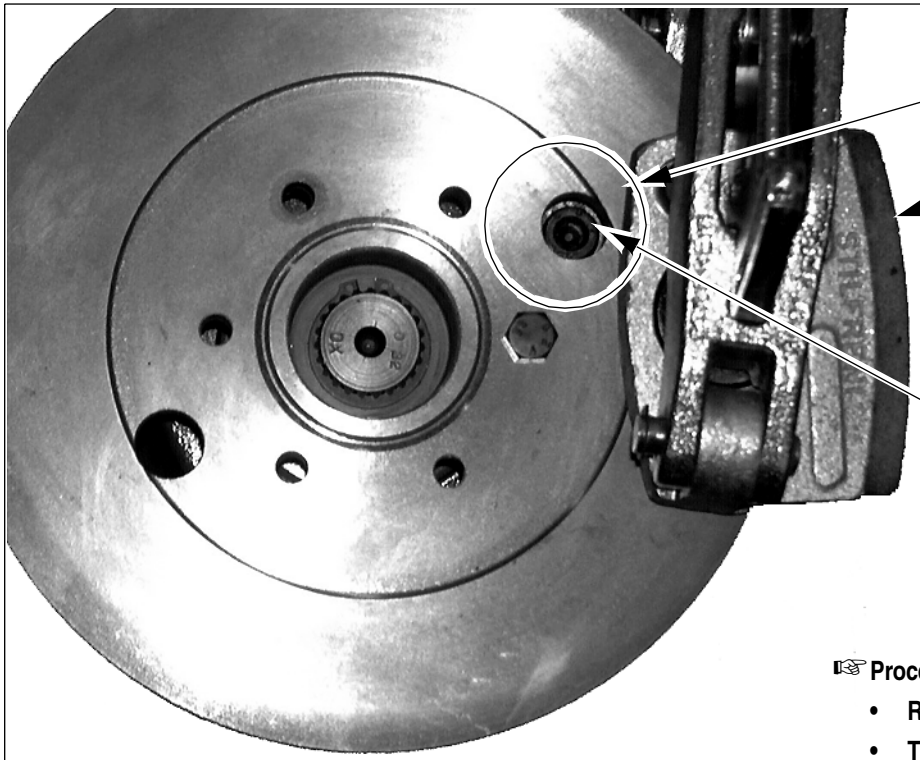

☞ **Proceed as follows:**

- **Remove the cable pulls (handbrake) on the brake calliper**
- **Turn the mounting bore in the brake disc above the attachment of the brake calliper**
- **Remove the fastening screws (hexagon socket ø 8) and the brake calliper**
- **Replace the brake linings by new ones**
- **Mount the brake calliper with the fastening screws**
  - ➥ **Secure the screws with Loctite 243**
  - ➥ **Tightening torque 46 Nm**
- **Mount the cable pulls (handbrake) on the brake calliper**
  - ➥ **Setting** – see *Cable pulls: basic setting* **on page 7-4**

7.4 Cable pulls: basic setting

7.4.1 Cable pull for inching

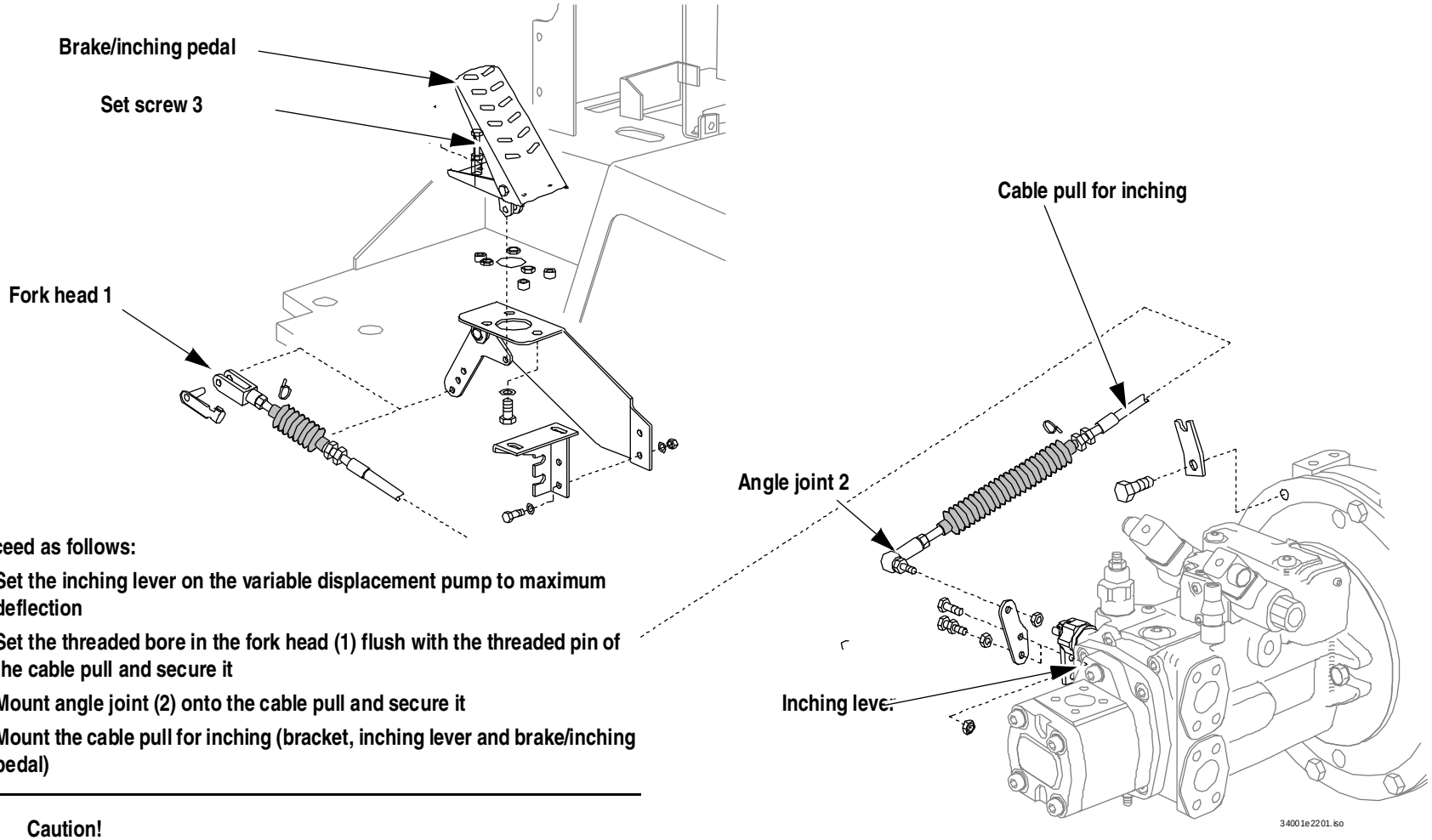

☞ **Proceed as follows:**

- **Set the inching lever on the variable displacement pump to maximum deflection**
- **Set the threaded bore in the fork head (1) flush with the threaded pin of the cable pull and secure it**
- **Mount angle joint (2) onto the cable pull and secure it**
- **Mount the cable pull for inching (bracket, inching lever and brake/inching pedal)**

Caution!

Adjust the brake/inching pedal without applying any pressure in order to avoid damage to the inching valve

☞ **Slightly press the brake/inching pedal down as far as it will go**

☞ **Adjust set screw (3) to the limit and secure it**

7.4.2 Cable pull – handbrake

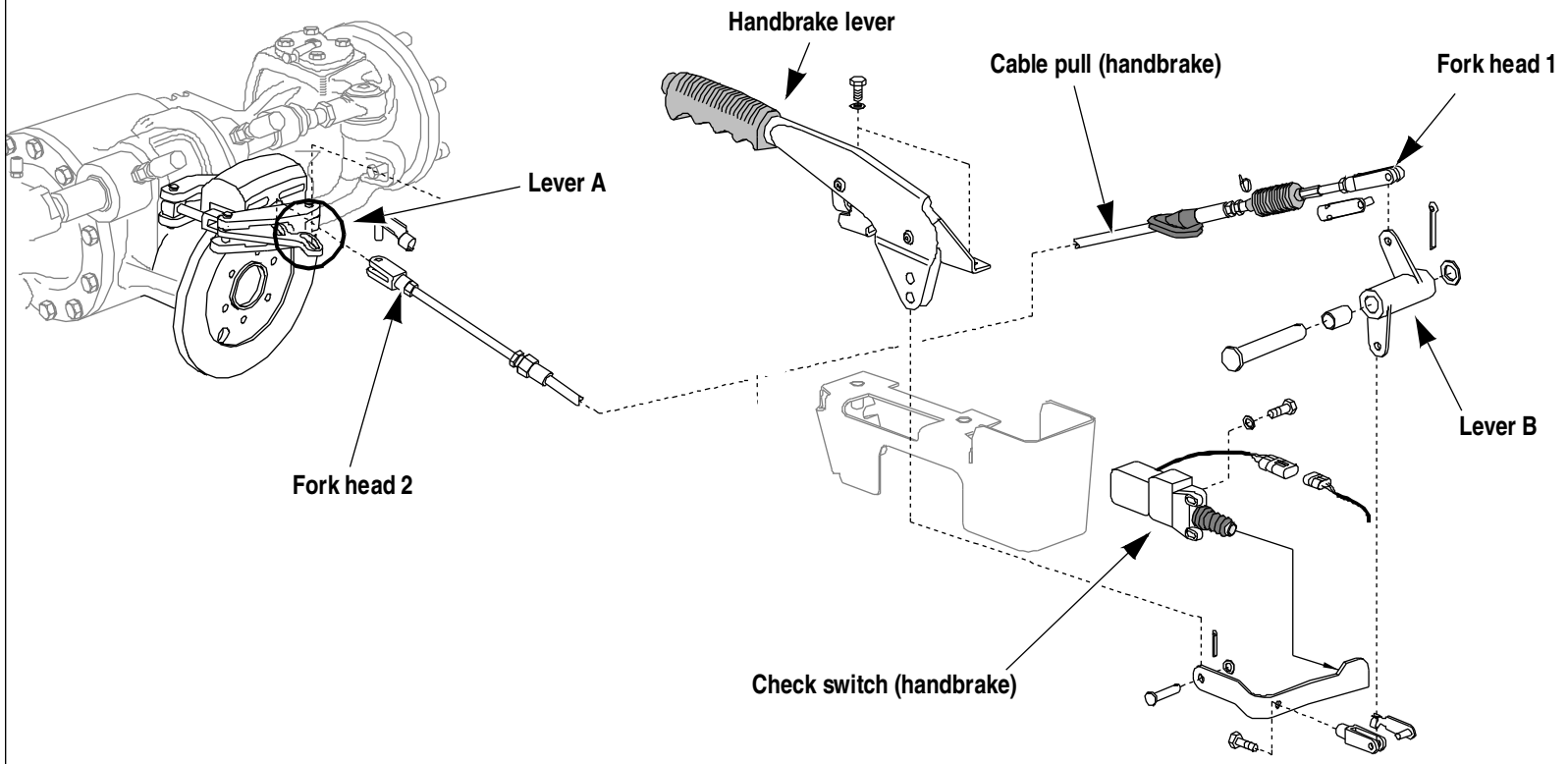

☞ **Proceed as follows:**

- **Set the threaded bore in the fork head (1 + 2) flush with the threaded pin of the cable pull and secure it**
- **Mount the cable pull (handbrake) (lever A + B)**
- **Secure fork head (1)**
- **Pull the handbrake lever with force 5 – 6 times and release it**
- **Adjust the cable pull (handbrake) on fork head (2)**
  - ➥ **Setting: 4 – 5 notches on the handbrake lever**
- **Secure fork head (2)**

7.4.3 Cable pull – handbrake

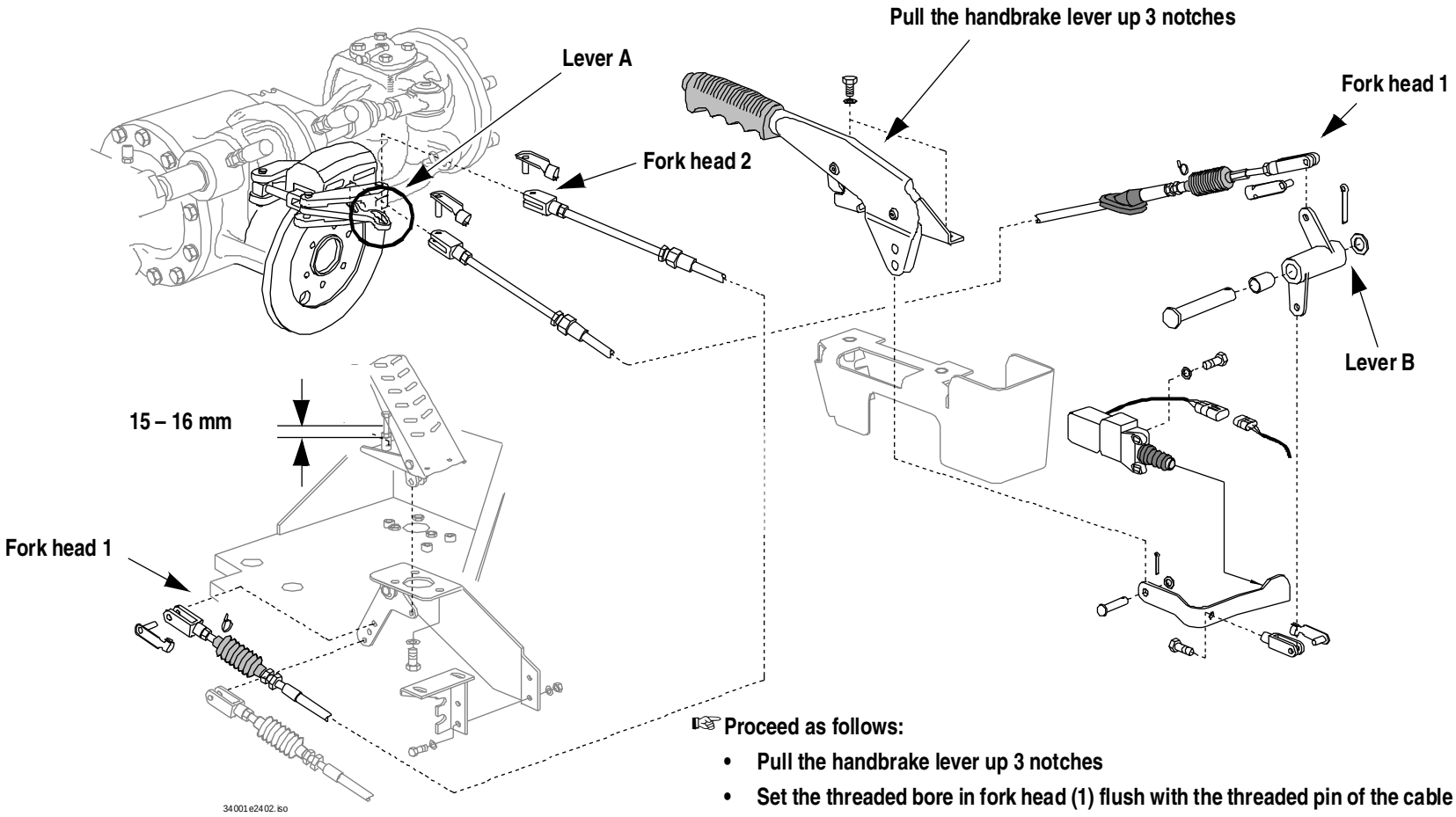

☞ **Proceed as follows:**

- **Pull the handbrake lever up 3 notches**
- **Set the threaded bore in fork head (1) flush with the threaded pin of the cable pull**
- **Mount the cable pull on lever (B) and secure it**
- **Fasten the brake/inching pedal 15 – 16 mm before the stop bolt**
- **Adjust fork head (2) on the cable pull and mount it onto lever (A) without any tolerance**
- **Secure fork head (2)**

  ➥ **Hydraulic drive is interrupted, handbrake is actuated**

Steering system

8 Steering system

8.1 Steering circuit overview

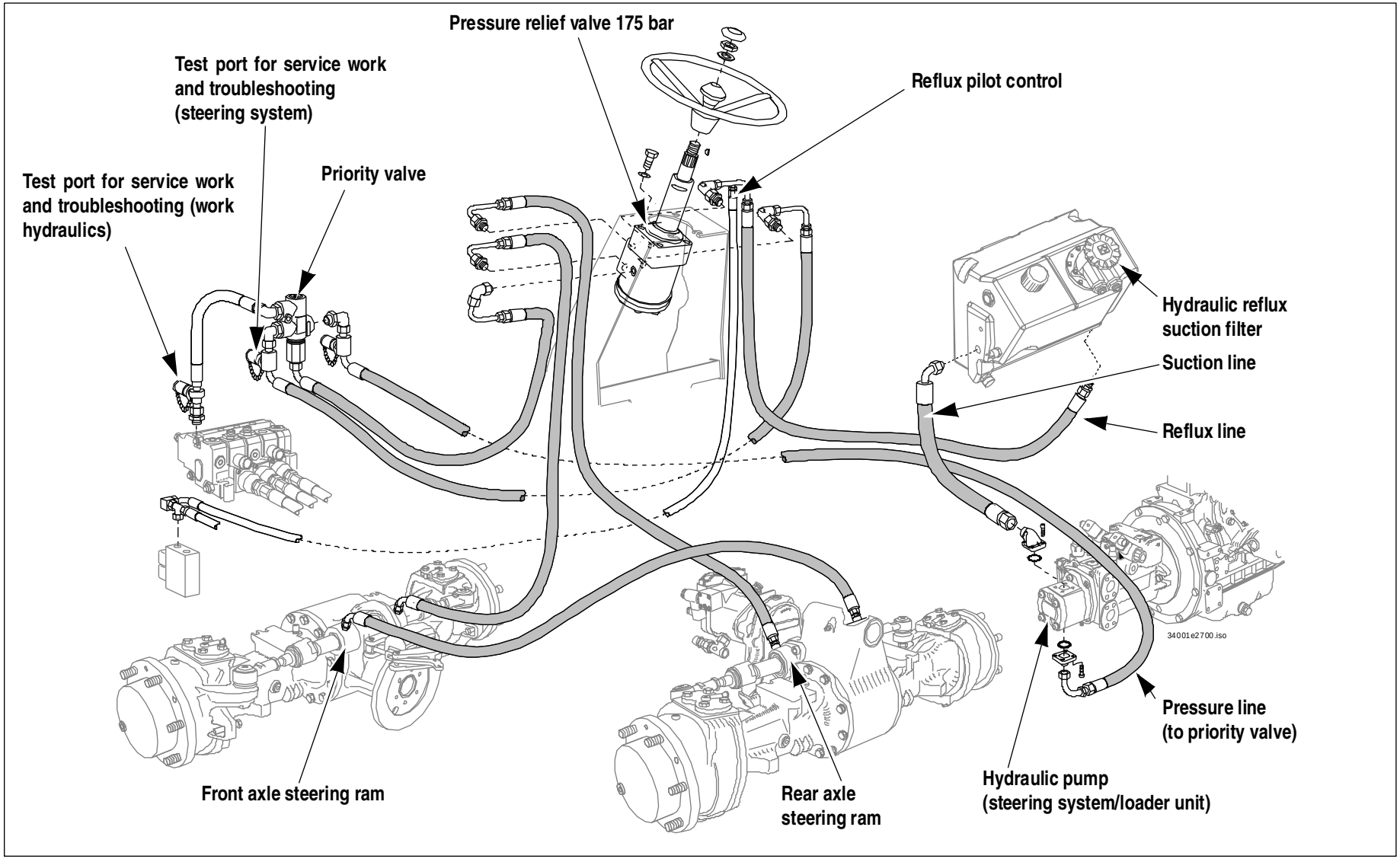

8.2 Steering diagram 340-01 (180)

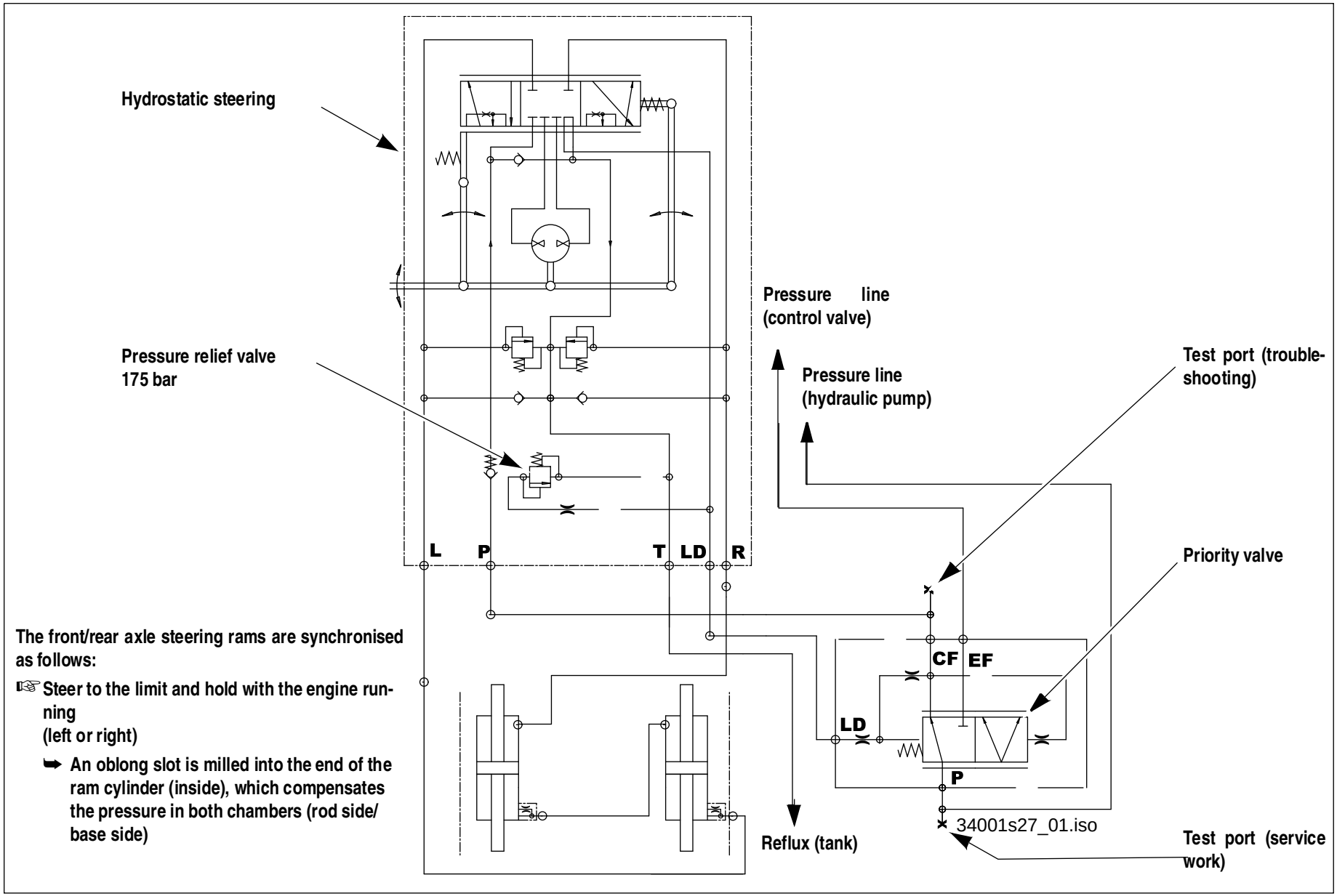

The front/rear axle steering rams are synchronised as follows:

☞ Steer to the limit and hold with the engine running (left or right)

➥ An oblong slot is milled into the end of the ram cylinder (inside), which compensates the pressure in both chambers (rod side/ base side)

8.3 Steering diagram 341-01/341-02

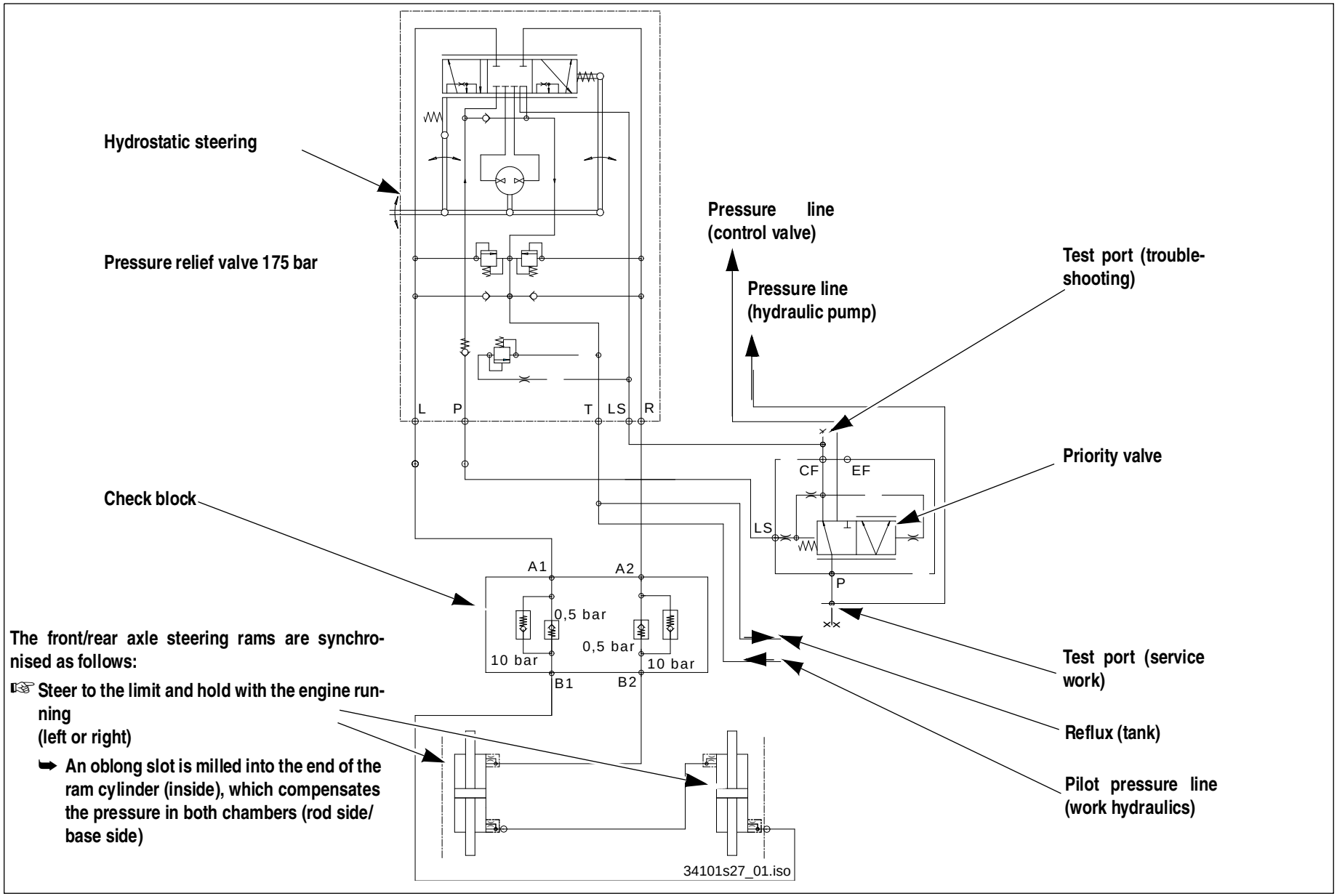

The front/rear axle steering rams are synchronised as follows:

☞ Steer to the limit and hold with the engine running (left or right)

➥ An oblong slot is milled into the end of the ram cylinder (inside), which compensates the pressure in both chambers (rod side/ base side)

8.4 Hydraulic circuit (steered to the left) model 340-01 (180)

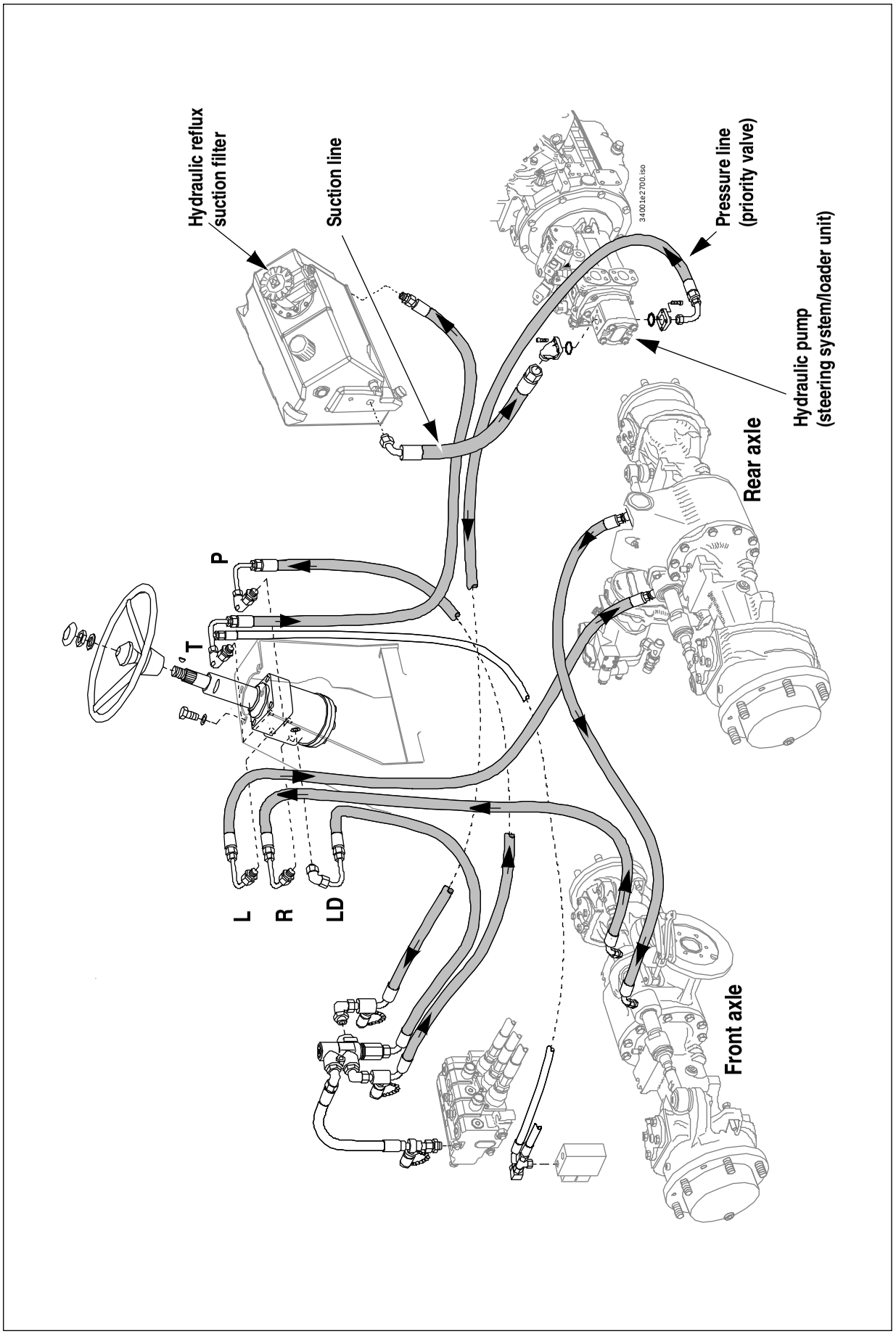

8.5 Hydraulic circuit (steered to the right) model 340-01 (180)

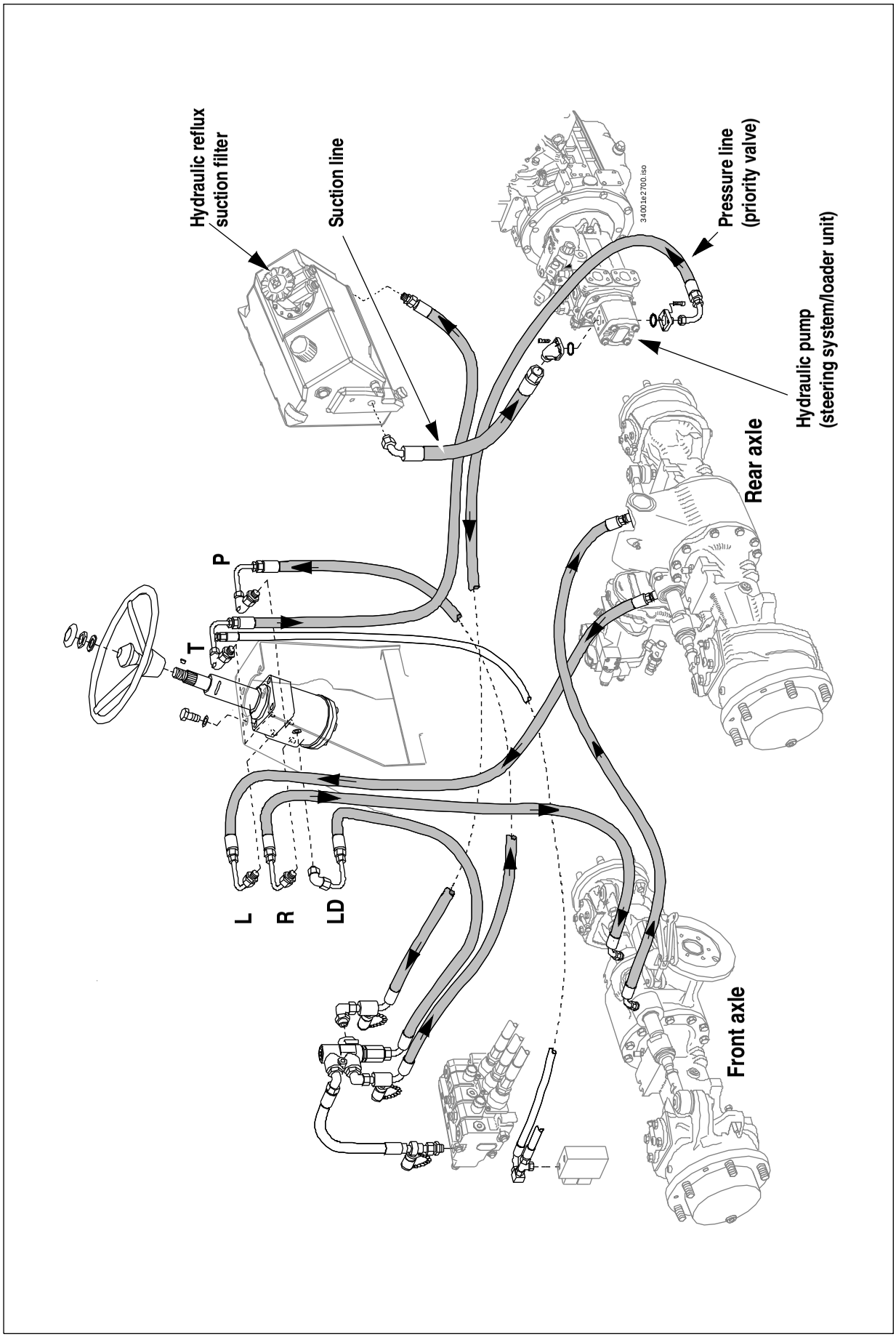

8.24 Hydraulic ports on servostat

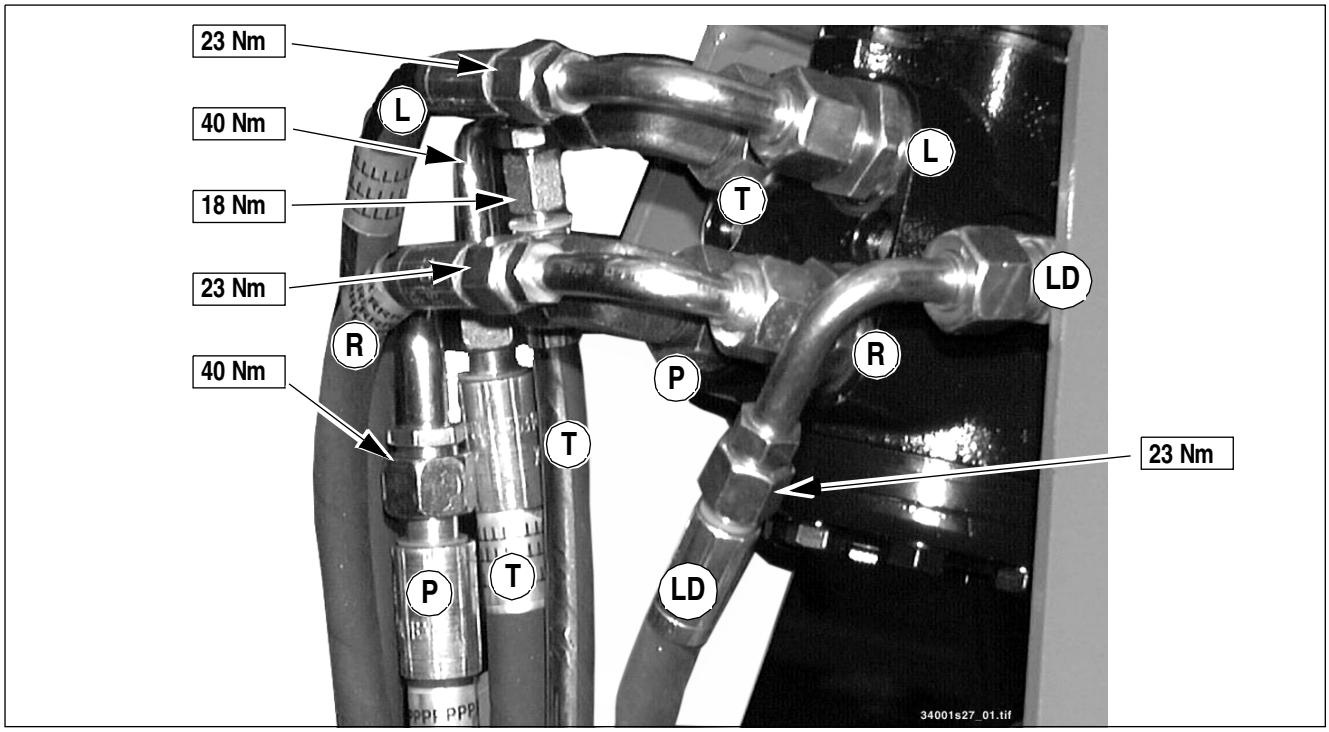

- **LD** = load sensing Priority valve – servostat
- **L** = left Servostat – rear axle steering ram
- **R** = right Servostat – front axle steering ram
- **P** = pressure Hydraulic pump – priority valve – servostat
- **R** = reflux Servostat – hydraulic tank

8.25 Pressure relief valve – servostat: settings



Fig. 123:

☞ Proceed as follows:

- Remove the plug
- Set pressure to 175 bar with allen key (ø 6)
- Install the plug

8.26 Sealing steering rams

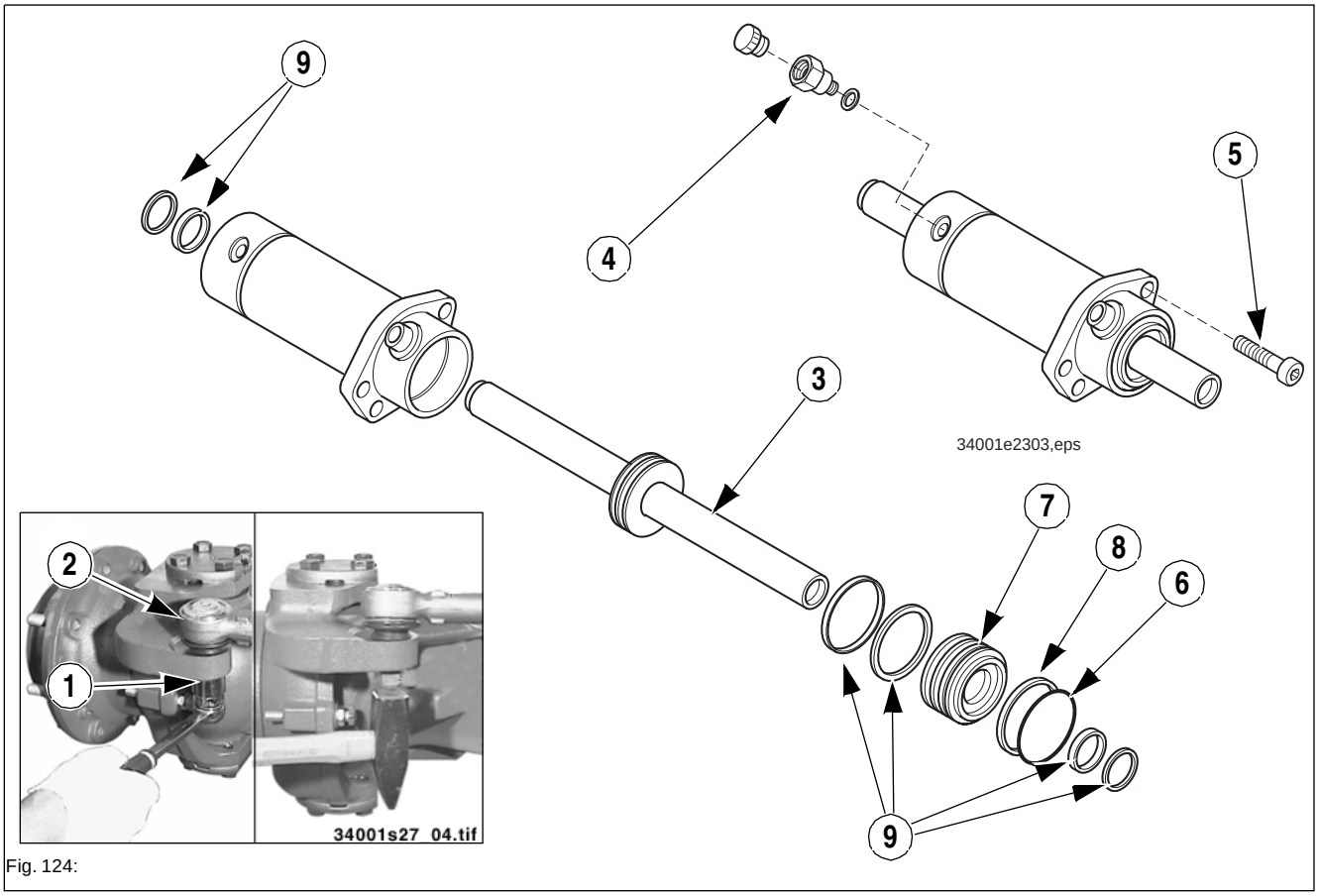

Fig. 124:

☞ Proceed as follows:

- Remove lock nut **1** on track rod joint **2**
- Remove track rod joint **2** from the planetary carrier
- Determine the setting value between the end of the piston rod and the track rod joint
  ➥ e.g. determine the revolutions as you remove track rod joint **2**
- Remove track rod joint **2** from piston rod **3**
- Remove threaded pipe fitting **4**
- Remove the complete steering ram from the axle carrier
  ➥ 3 screws **5**
- Fasten the steering ram in a vice with aluminium clamps
- Remove circlip **6**
- Slide guide bushing **7** to the inside
- Remove circlip **8**
- Pull out piston rod **3** with guide bushing **7**
- Replace the seals and cuffs **9**
- Assembly in the reverse order
  ➥ Observe the tightening torques
  – see chapter 6 *"Tightening values (Nm) model 340-01"* on page 6-3

8.27 Steering system adjustment

Function

Steering is carried out by means of 2 steering rams. Both steering rams are connected together on one side of the chamber, the steering valve and the check block are located in between. Each of these components has a certain amount of leakage which means hydraulic oil escapes between the front and rear steering rams. This oil is no longer replenished whilst steering since pressure is applied to only one side of the front or rear steering ram when steering to the left or right. This is why synchronising several times a day is normal, depending on the use the machine is put to.

Checking a steering ram

☞ Apply pressure to the steering ram in centre position, i.e. block one side with a sleeve.

☞ Remove the hydraulic lines. The connecting piece to the manual pump must have a micro port and a stop cock

☞ Raise pressure to 150 bar; pressure is allowed to drop to about 20 bar in 10 minutes

☞ Then carry out a low-pressure test at 10 bar; no pressure drop in the process!

8.28 Overview of steering ram setting

Readjust the steering system when carrying out repair work on the axles or in case of complaints:

- After replacing/repairing the track rods or the track-rod ends **C**
- After carrying out repair work on the joint housings or stop screws **E**
- After carrying out repair work on the steering ram, e.g. replacing the piston rod or ram cylinder.
  The steering requires no setting in case of sealing work during which locknut **B** on track-rod end **C** has not been slackened.

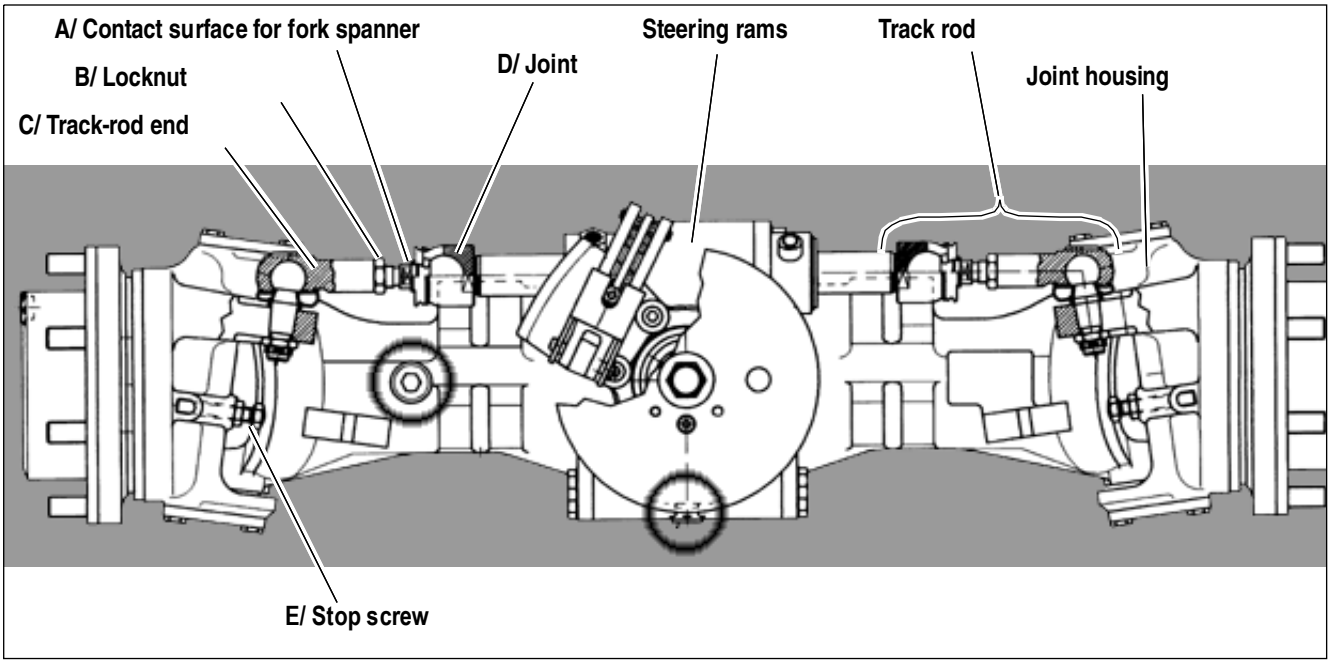

Necessary tools

1 measuring staff, about 3 m

1 track measurement rod

1 screw connection G 10-L (order no. 1000020767)

Standard tools

8.29 How to check/set the steering rams

The diagram shows how to follow the separate steps.

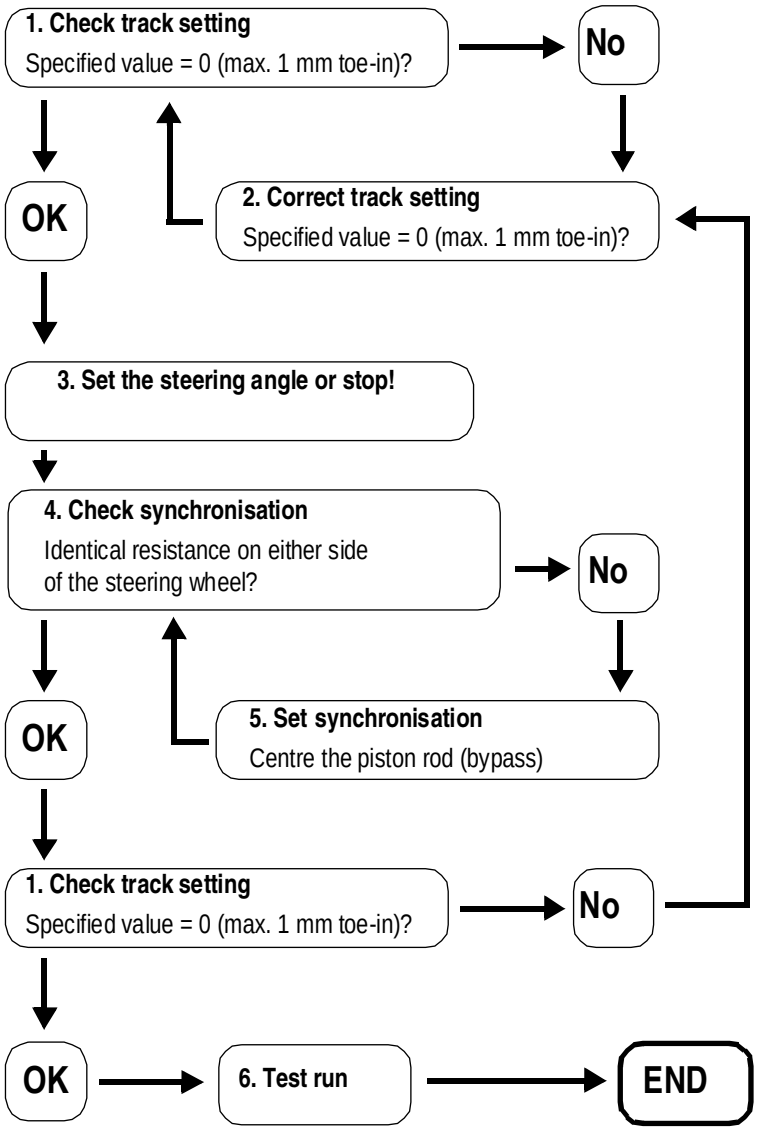

8.30 Checking the track setting (1)

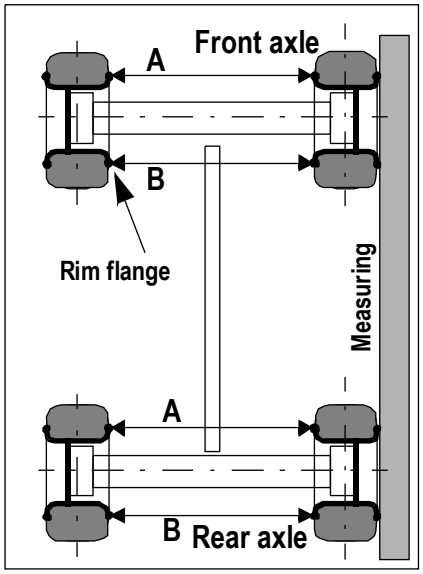

Check the track as follows:

☞ Jack up the machine and prop it safely. Make sure there is enough space for steering at the full steering angles for the front and rear axles.

☞ Set the steering to straight ahead. Check with the measuring staff

☞ Determine **dimension A** and **dimension B**. To this effect, measure with the track measurement rod on the inside on the rim flange at the centre of the wheel

➥ **Rated dimension B – A = 0, max. + 1 mm**

➥ I.e. dimension **A** may be a max. 1 mm smaller than dimension **B** on the same axle

Caution!

Check and set the tracks of front and rear axles separately!
The front and rear axle dimensions may differ slightly due to production tolerances.

8.31 Correcting the track setting (2)

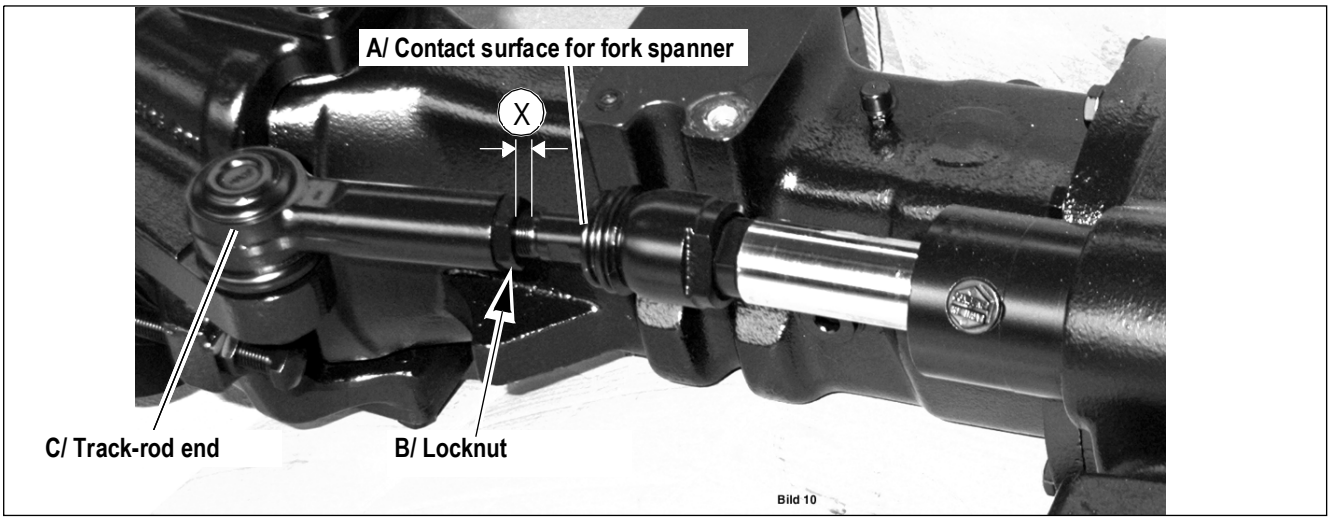

If the track setting does not correspond to the specified value **0 (max. 1 mm toe-in)**, set the track as follows:

☞ Slacken locknut **B** on either side

☞ Slightly and evenly screw in or unscrew the threaded rod in track-rod end **C** on either side.

➥ Make sure **dimension X** is approximately identical on either side.

☞ Check the track setting again

☞ Repeat this procedure until the track setting corresponds to the specified value.

☞ Counter locknut **B**

☞ Check **dimension X** again on either side of the steering ram

8.32 Setting the steering limit (3)

Specified value: steering angle = 40 ° (front and rear axles)

The steering synchronisation will not run correctly unless the steering angles of all wheels are exactly the same.

The exact setting of the steering angles and stops has been carried out in the plant.

Proceed as follows if no measurement equipment is available.

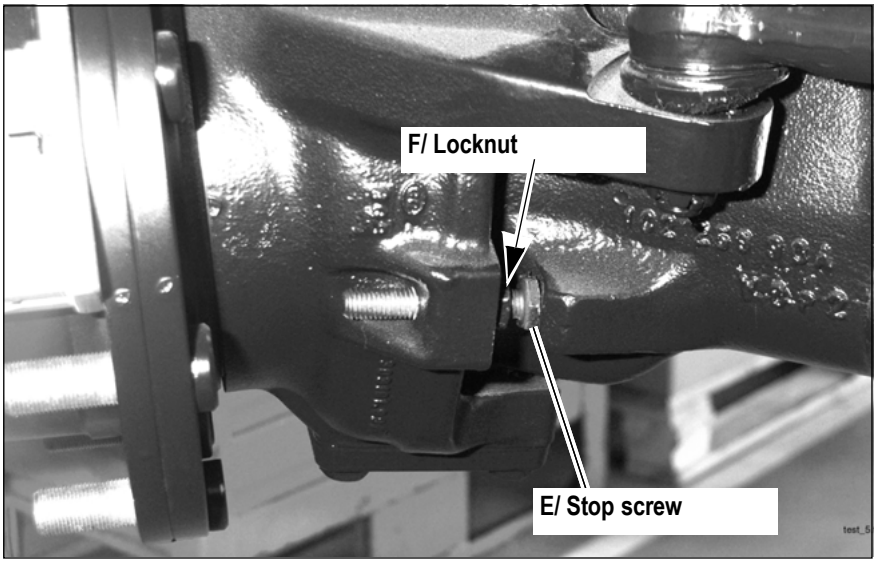

Proceed as follows:

☞ Slacken locknuts **F** on stop screws **E**

☞ Fully unscrew all stop screws **E** on either side of the front and rear axles

☞ Actuate the steering ram to the **left** as far as it will go

➥ Stop screw **E** is not allowed to touch the limit stop on the axle

☞ Turn stop screw **E** against the limit stop by hand, then unscrew it again **1.5 revolutions** and counter it with locknut **F**

☞ Actuate the steering ram to the **right** as far as it will go

➥ Stop screw **E** is not allowed to touch the limit stop on the axle

☞ Turn stop screw **E** against the limit stop by hand, then unscrew it again **1.5 revolutions** and counter it with locknut **F**

Important!

Carry out these basic settings on both joint housings of the front and rear axles. Limiting the maximum steering angle ensures steering angles of about 40°.

8.33 Checking steering synchronisation (4)

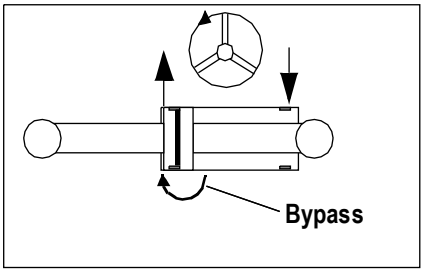

The axles are synchronised by means of a bypass in the final positions of the steering rams. In the final position of the piston, oil flows from one side of the cylinder to the other.

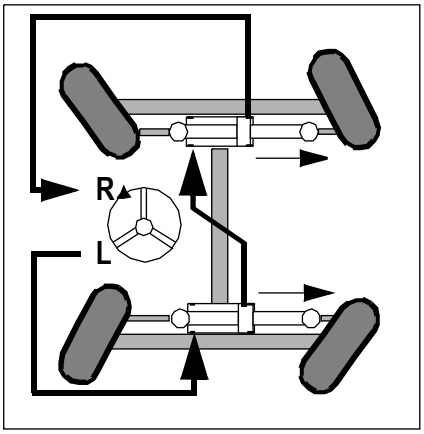

In the axle that reaches the steering limit first, the oil flows through a bypass in the steering ram and on to the other side if the wheels do not run synchronously.

If the steering wheel is turned further, the steering ram of the other axle moves on as far as it will go. The wheels on the inside curve have the same steering angle in this case. The wheels (or the axles) are hence synchronous.

If the steering is set to straight ahead again, the wheels (or the axles) run in the same track.
However, this only works optimally if the bypass position with regard to the left and right of the piston (and with regard to the front and rear axles) is symmetrical in the limit positions.

This is the case if the same resistance can be felt at the steering limits on the left and right when evenly turning the steering wheel at the same speed.

➥ The force required to turn the steering wheel at the limit stops on the left and right must be identical.

The steering rams (or the bypasses) of the front and rear axles must be centred separately as follows to ensure this.

Checking the bypass

When checking the front axle

☞ Remove both flexible lines from the rear axle steering ram and connect them with an intermediate screw connection G 10-L (order no. 1000020767)

When checking the rear axle

☞ Remove both flexible lines from the front axle steering ram and connect them with an intermediate screw connection G 10-L (order no. 1000020767)

Caution!

Make sure there is no air in the steering circuit otherwise synchronisation cannot be checked or set correctly!

☞ *Bleed the steering system after repairing the steering rams – see Bleeding the steering rams on page 8-13!*

Bleeding the steering rams

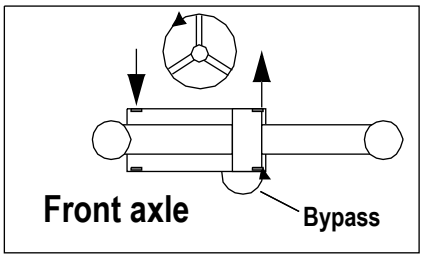

☞ Start the engine

☞ Turn the steering wheel to the left until a resistance can be felt

☞ Continue turning the steering wheel 5 to 10 revolutions until the resistance no longer changes

☞ Turn the steering wheel to the right until a resistance can be felt

☞ Continue turning the steering wheel 5 to 10 revolutions until the resistance no longer changes

If there is no more air in the steering circuit, then ...

☞ Turn the wheels to the left as far as they will go

☞ Continue turning the steering wheel against the limit

➥ You must be able to feel a certain resistance (oil flows through the bypass)

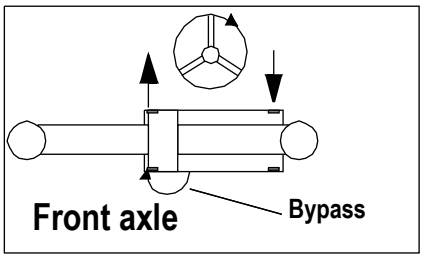

☞ Turn the wheels to the right as far as they will go

☞ Continue turning the steering wheel against the limit

➥ You must be able to feel the same resistance here, too, as on the other side

➥ If the resistance is stronger (at the same speed with which the steering wheel is turned), move the piston of the piston rod to the left until reaching the same resistance

☞ See *"Setting steering synchronisation (5)"* on page 8-14

Caution!

The steering rams of the front and rear axles are checked in the same way!

8.34 Setting steering synchronisation (5)

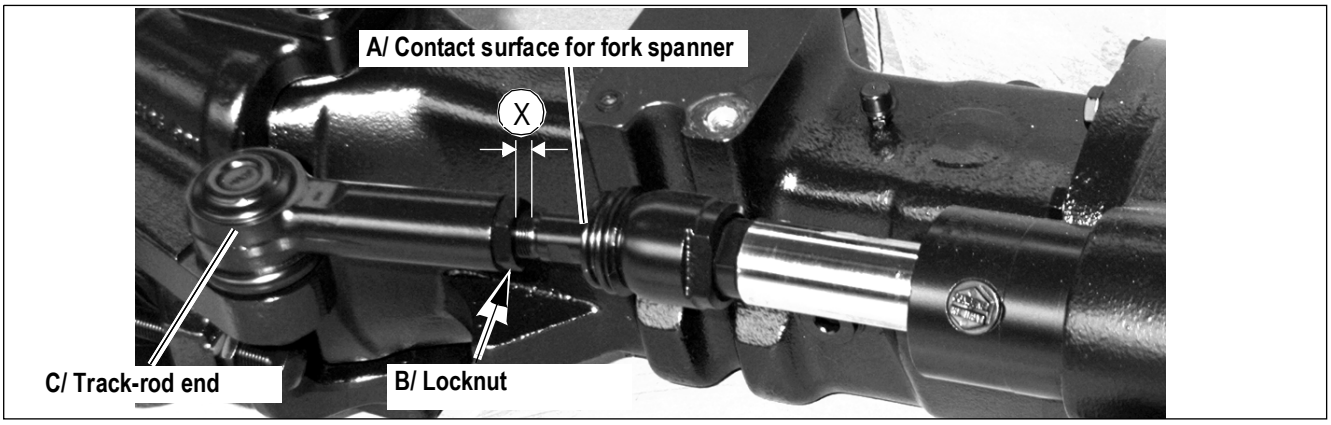

Caution!

Basically, always move the piston in the direction with the stronger resistance!

Proceed as follows:

- ☞ Set the steering system to straight-ahead position
- ☞ Switch off the engine and the ignition
- ☞ Slacken locknut **B** on either side, counter on contact surface **A** with a fork spanner
- ☞ Move the piston gradually (half revolutions) until the resistance you can feel on the steering wheel is identical. To this effect:
  - ☞ Unscrew the threaded rod half a revolution on track-rod end **C** on the left
  - ☞ Screw in the threaded rod the same number of revolutions on track-rod end **C** on the right
- ☞ Tighten locknut **B** on either side, counter on contact surface **A** with a fork spanner as you do so
- ☞ Check the track again as soon as the piston rod is centred. **Dimension X** is of no importance now since it is no longer identical on the left and right.
- ☞ Remove the intermediate screw connection G 10-L (order no. 1000020767) between the flexible lines on the steering ram and mount the flexible lines correctly onto the steering ram connections

Caution!

The steering rams of the front and rear axles are set in the same way!

Final check/test run

- ☞ Tighten all flexible lines and screw connections oil-tight
- ☞ Put the machine back onto its wheels
- ☞ Carry out a test run. Turn the steering wheel to the left and right as far as it will go to check the synchronous position of the wheels

Hydraulics

9 Hydraulics

9.1 Hydraulics diagram with pilot control

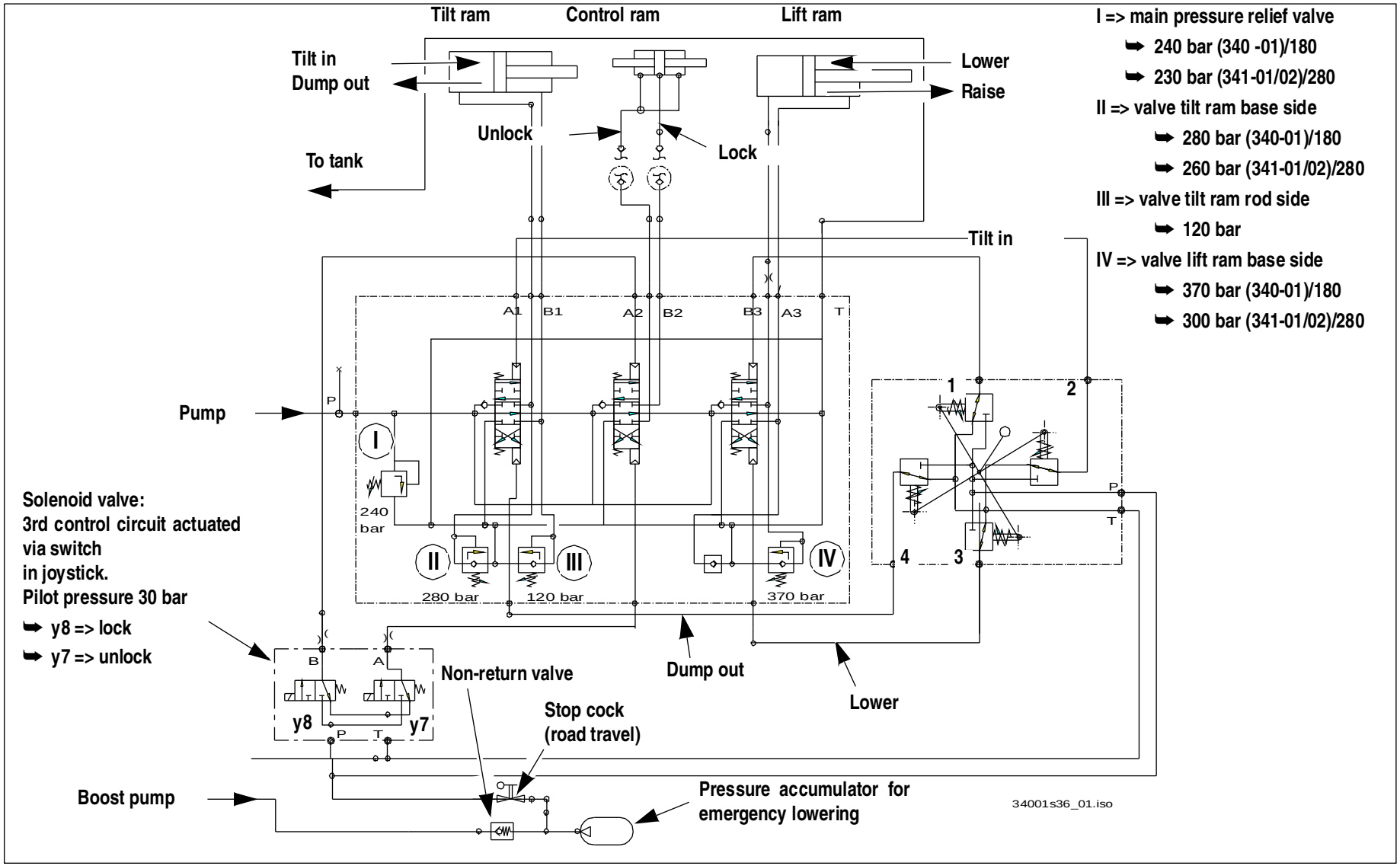

krameralLRAD

9.2 Hydraulics diagram – float position

Control valve	to	Joystick
A1	-	2
B1	-	4
A3	-	3
B3	-	1

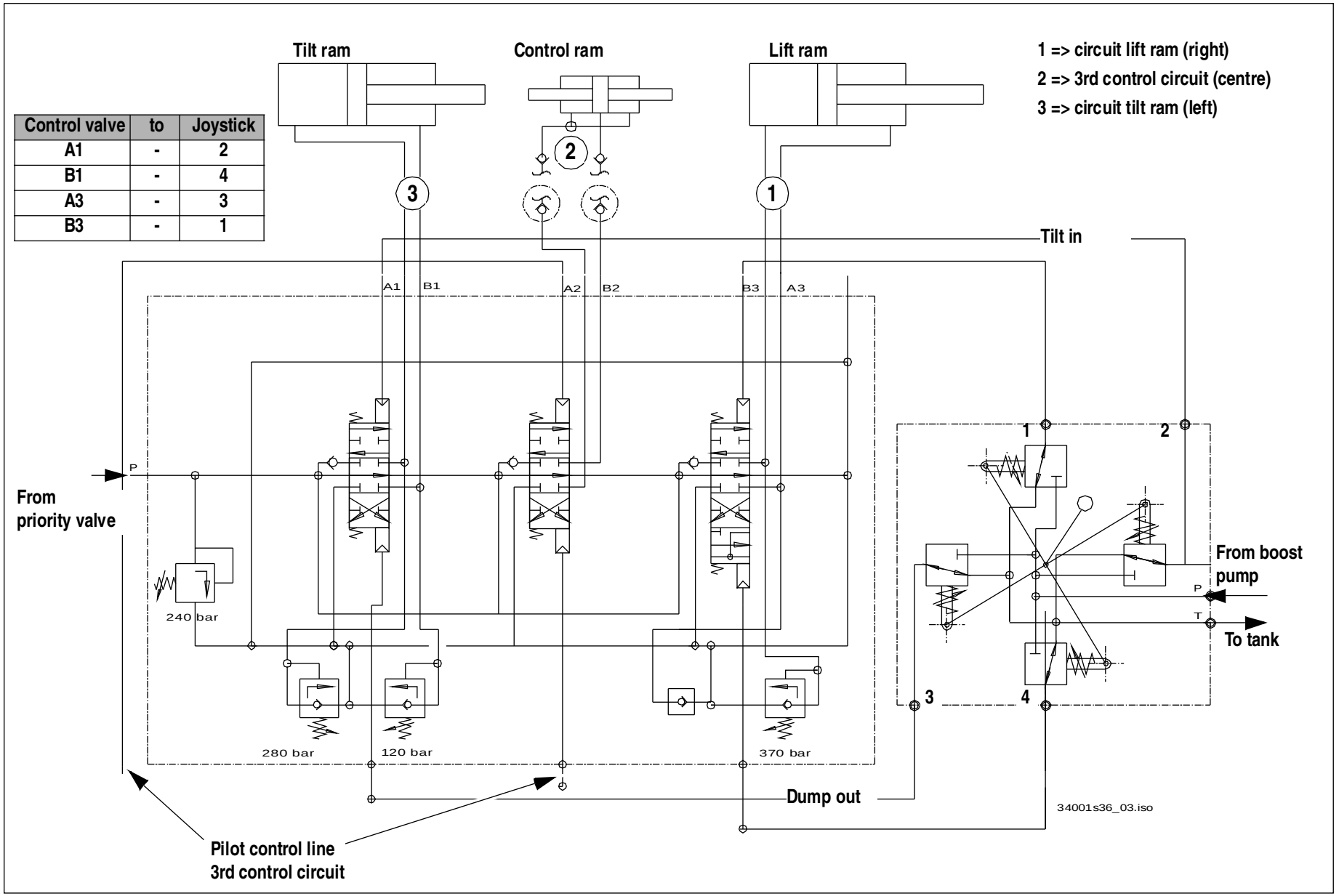

9.3 Hydraulic circuit: pump – control valve – tank

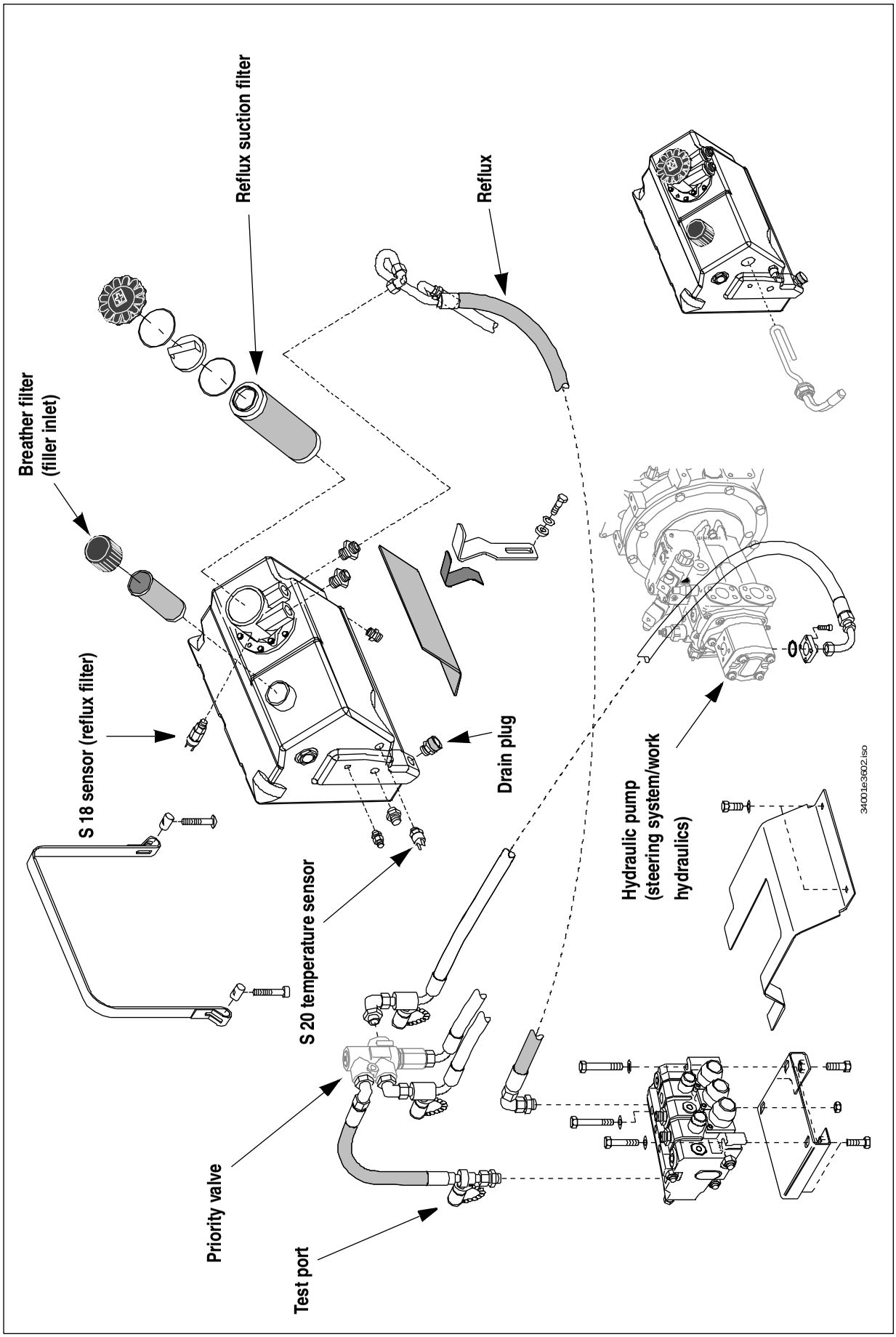

9.4 Control valve: overview

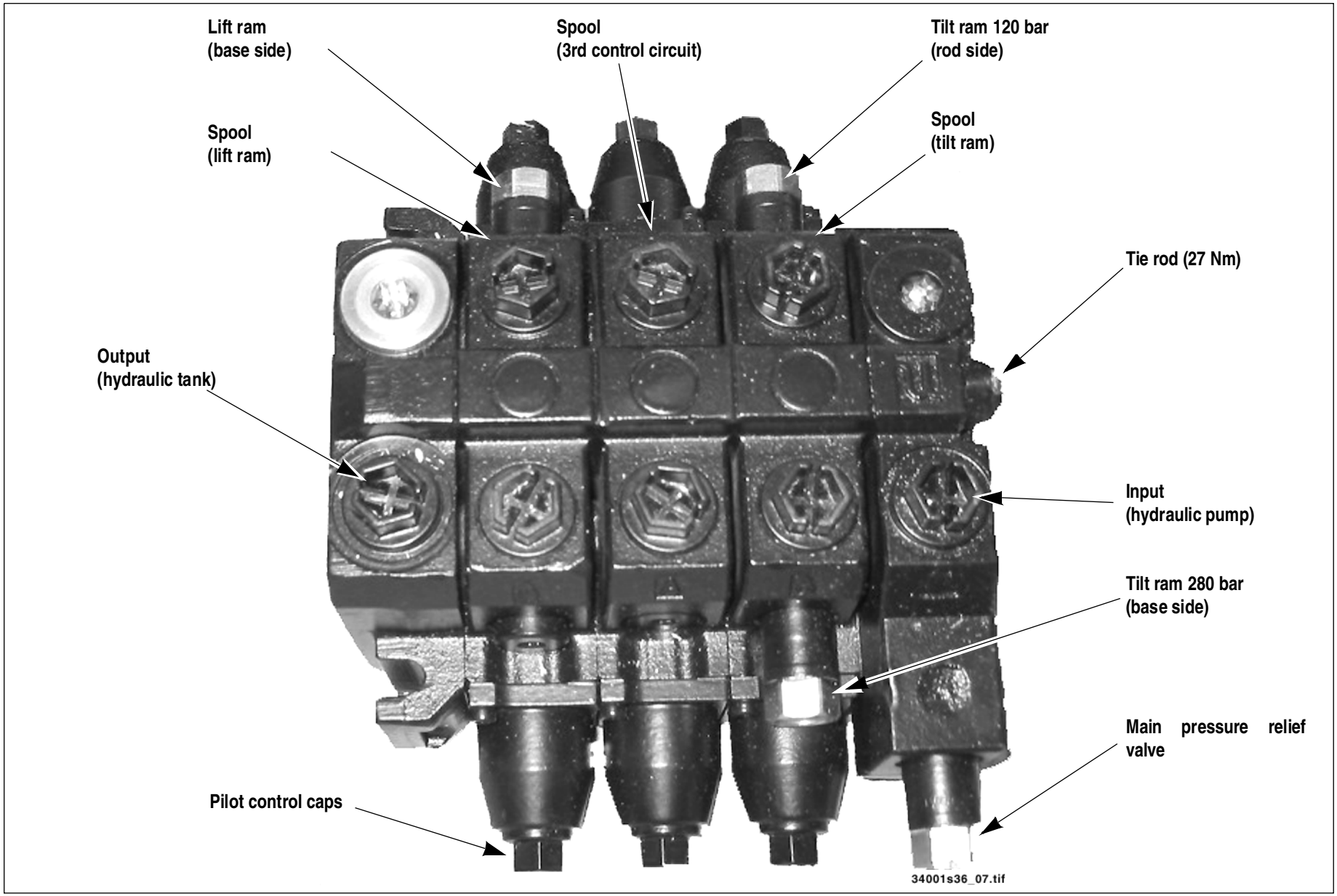

9.5 Hydraulic ports on control valve

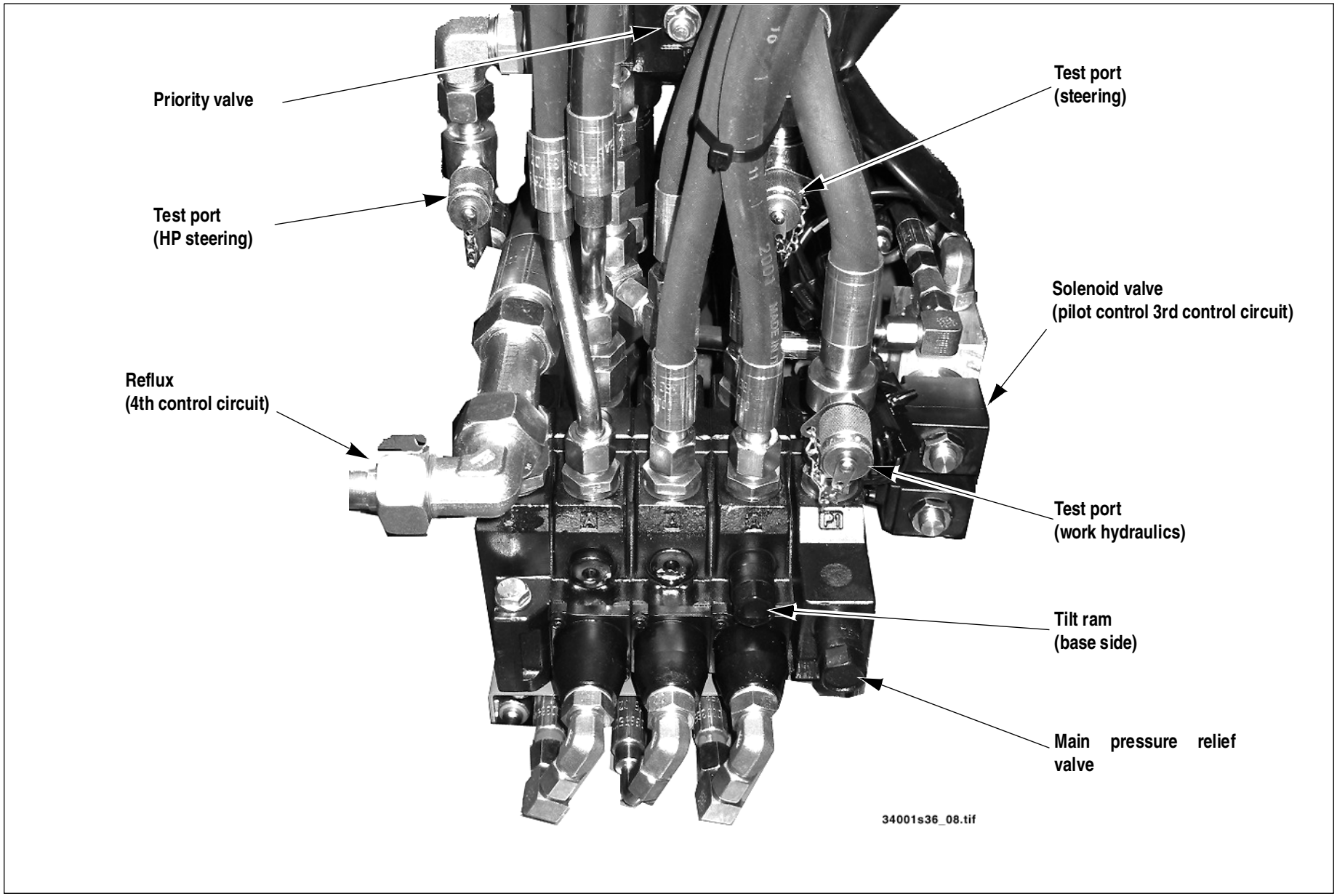

9.6 Hydraulic circuit pilot control

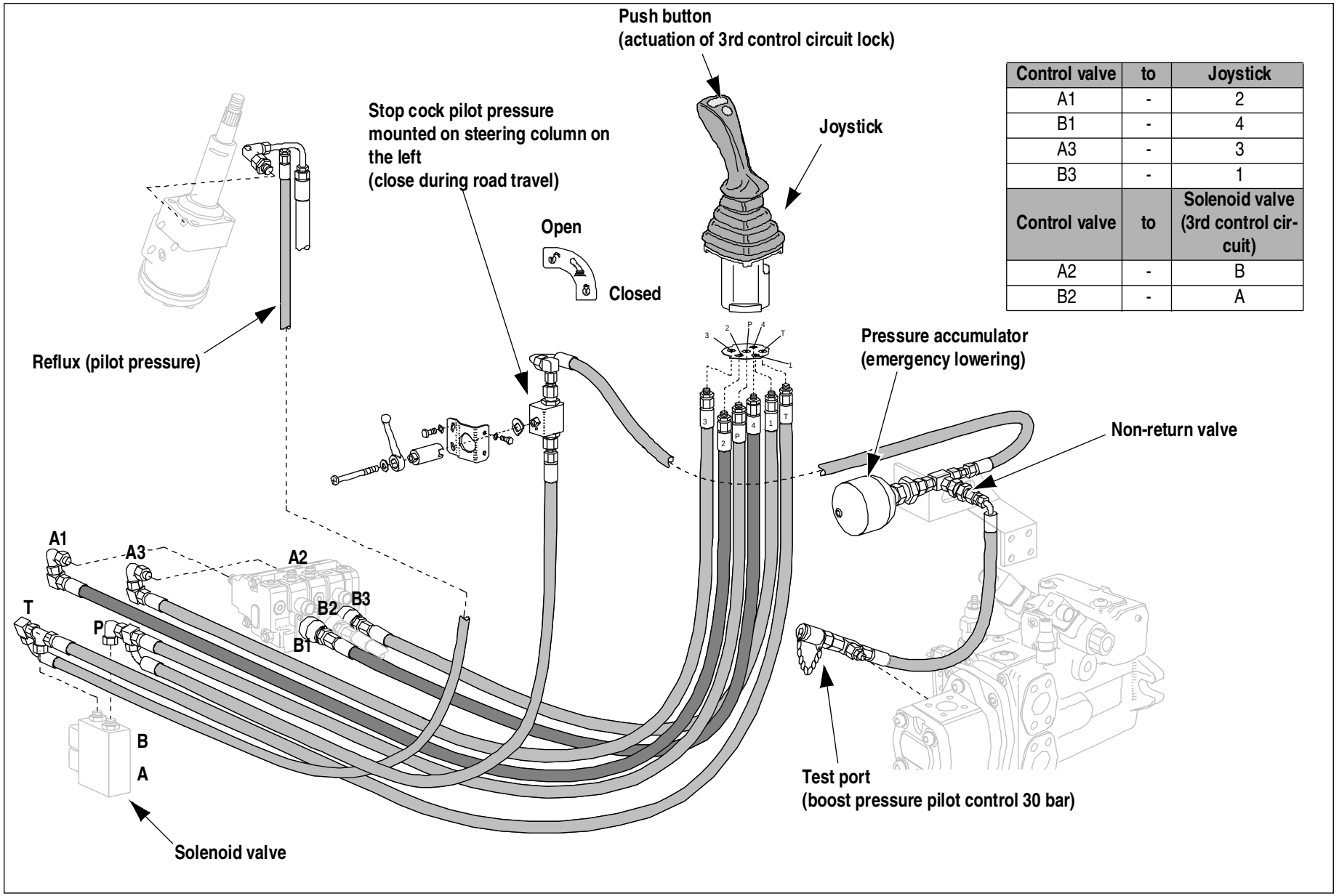

Control valve	to	Joystick
A1	-	2
B1	-	4
A3	-	3
B3	-	1
Control valve	**to**	**Solenoid valve (3rd control circuit)**
A2	-	B
B2	-	A

9.7 Sealing the lift ram

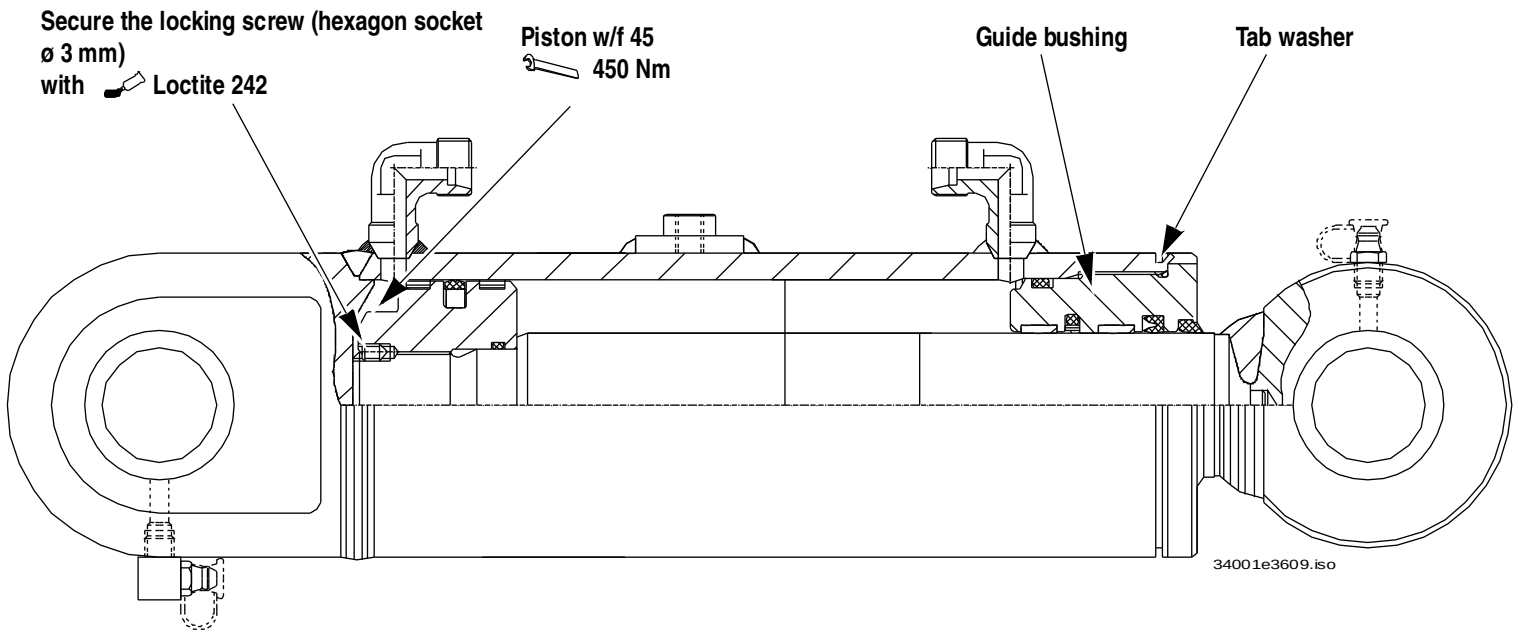

☞ **Disassembly/assembly:**

- Remove the tab washer
- Unscrew the guide bushing with a special spanner (hook spanner)
- Extract the piston rod complete with guide bushing and piston
- Remove the locking screw on the piston (hexagon socket ø 3 mm)
- Remove the piston with fork spanner w/f 45
- Replace all seals with new ones (sealing kit)
- Assembly in the reverse order
  - ➥ Install the piston with torque 450 Nm
  - ➥ Fit the locking screw with Loctite 242

9.8 Sealing the tilt ram

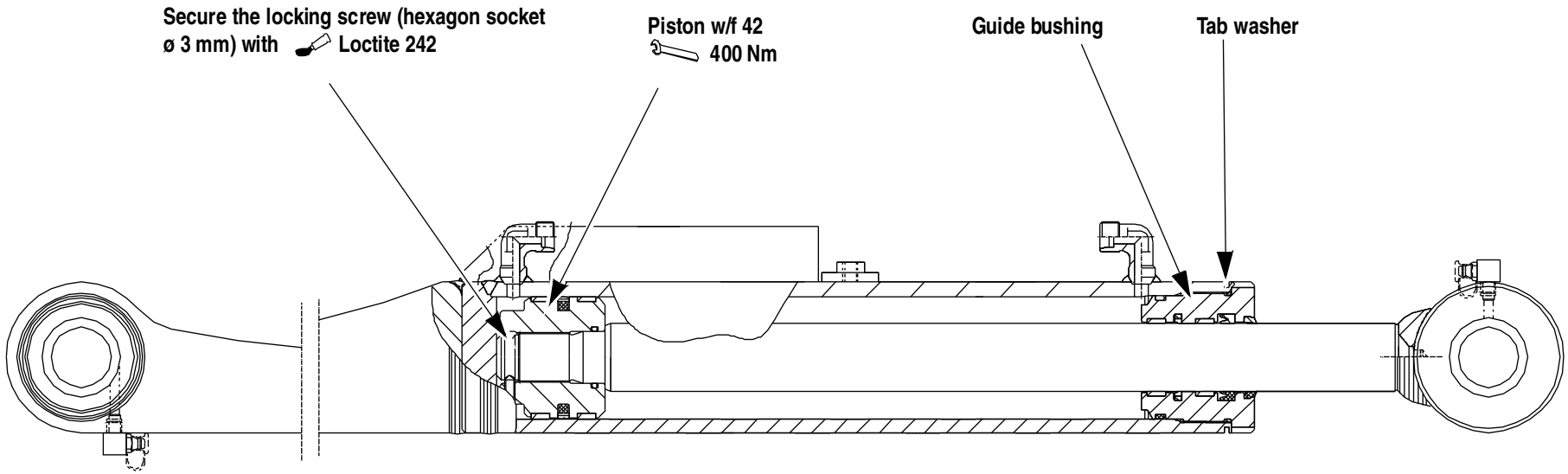

☞ **Disassembly/assembly:**

- **Remove the tab washer**
- **Unscrew the guide bushing with a special spanner (hook spanner)**
- **Extract the piston rod complete with guide bushing and piston**
- **Remove the locking screw on the piston (hexagon socket ø 3 mm)**
- **Remove the piston with fork spanner w/f 42**
- **Replace all seals with new ones (sealing kit)**
- **Assembly in the reverse order**
  - ➥ **Install the piston with torque 400 Nm**
  - ➥ **Fit the locking screw with Loctite 242**

9.9 Sealing the quickhitch ram

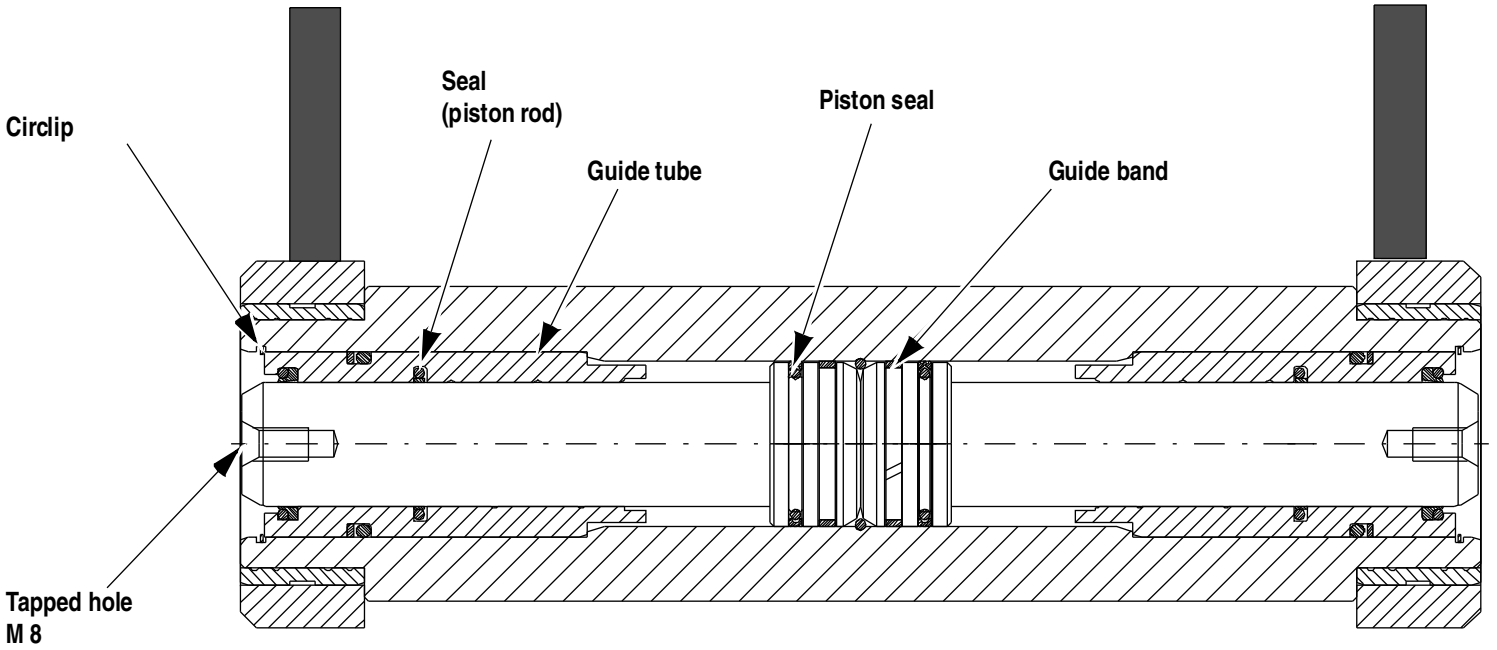

☞ **Disassembly/assembly:**

- **Remove the circlip**
- **Drive out the piston with an impact extractor M 8**
- **Replace all the seals of the piston rod by new ones**

  ➥ – see chapter 9 *"Sealing work: quickhitch ram piston rod"* **on page 9-10**
- **Fit the piston seal with a conical adapter**

  ➥ – see chapter 9 *"Assembly tools"* **on page 9-10**
- **Assembly in the reverse order**

9.35 Sealing work: quickhitch ram piston rod

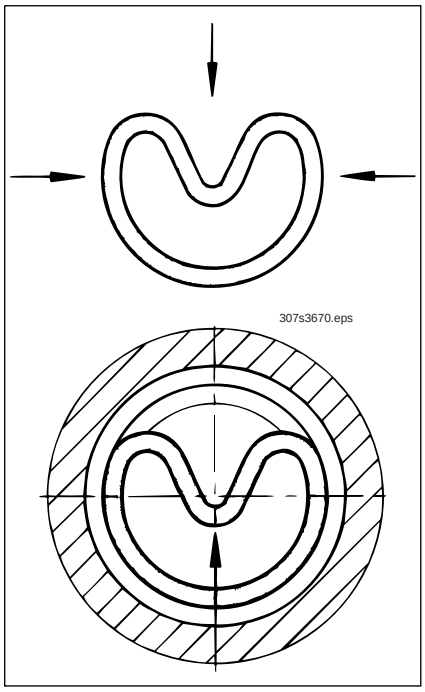

General instructions

Observe the following instructions before fitting the seals:

- ☞ Check whether the piston rod is bevelled. If this is not the case, use an assembly sleeve
- ☞ Debur sharp edges, apply radii or chamfer, cover thread tips
- ☞ Remove processing residues as chips, dirt or other particles and clean all parts carefully.
- ☞ Warm up Turcon rings in oil or water (to about 80 to 120 °C) to extend and reshape them much more easily
- ☞ Grease or lubricate the rod for easier assembly. Make sure the lubricant does not affect the sealing material used. In case of grease lubrication: do not use grease containing solid components, i.e. molybdenum disulfide or zinc sulphides!
- ☞ Do not use sharp-edged assembly tools

Assembly in closed grooves

We recommend using auxiliary assembly tools (circlip pliers) for Turcon and polyurethane seals. Observe the following if no auxiliary tools are available:

- ☞ Compress the sealing ring as shown opposite
- ☞ Insert the compressed sealing ring into the groove and press it against the groove in the direction of the arrow
- ☞ Once the sealing ring is inserted, reshape the seal with your fingers by pressing it back into the groove
- ☞ Calibrate with a drift bevelled 10 to 15° over a length of about 30 mm

9.36 Assembly tools

Assembly sleeve for fitting the piston seal

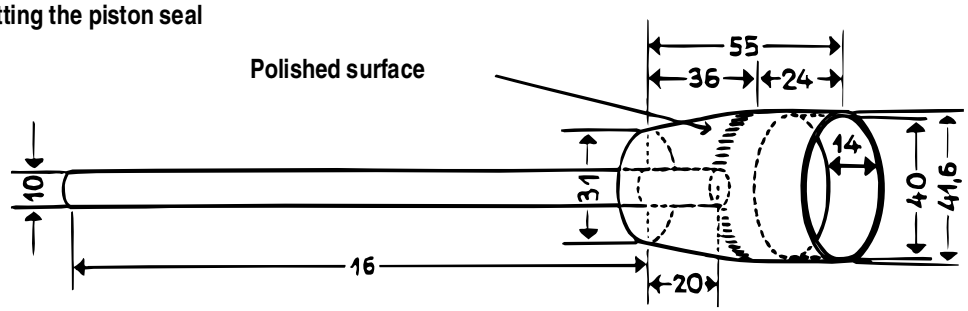

Calibrating sleeve for reshaping the piston seal

307s3660.eps

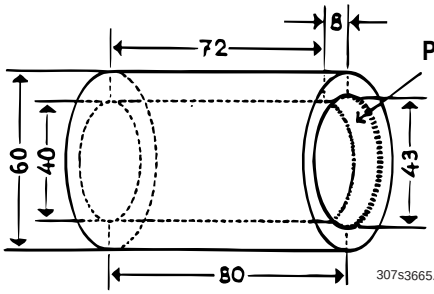

307s3665.eps

9.37 Loader unit: overview

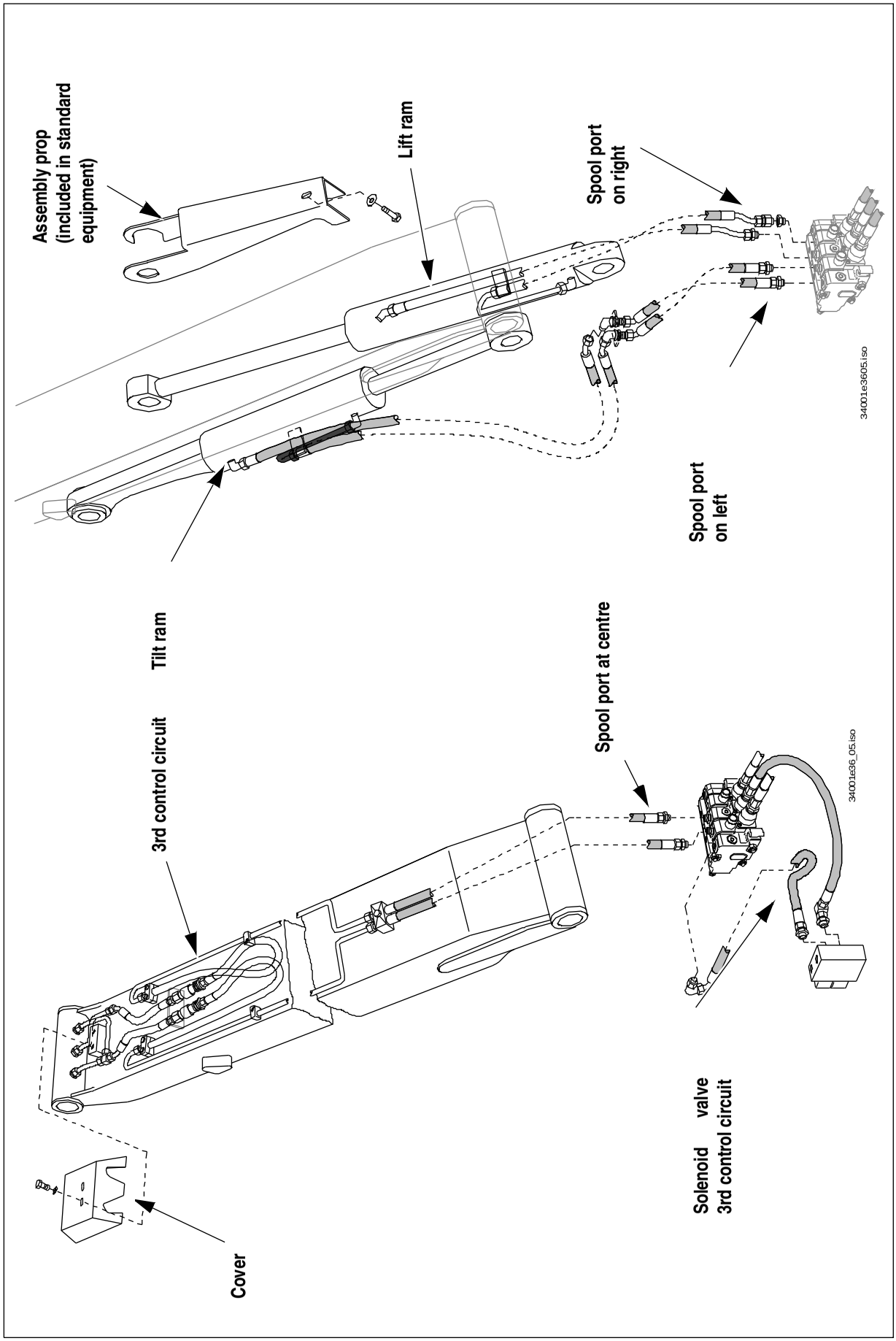

9.38 Hydraulic circuit 4th control circuit

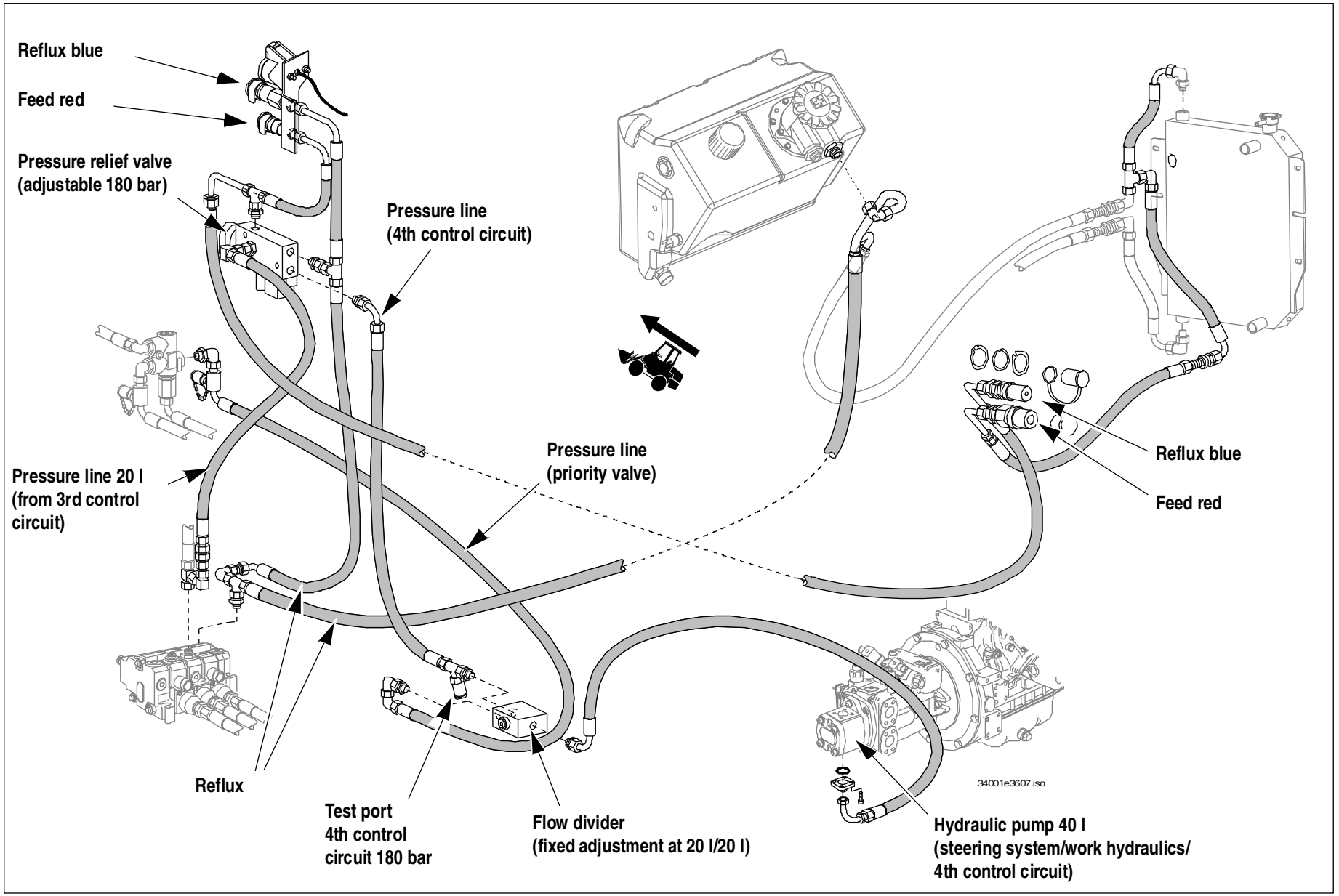

9.39 Hydraulic diagram: 4th control circuit – solenoid valve without contact (neutral circulation)

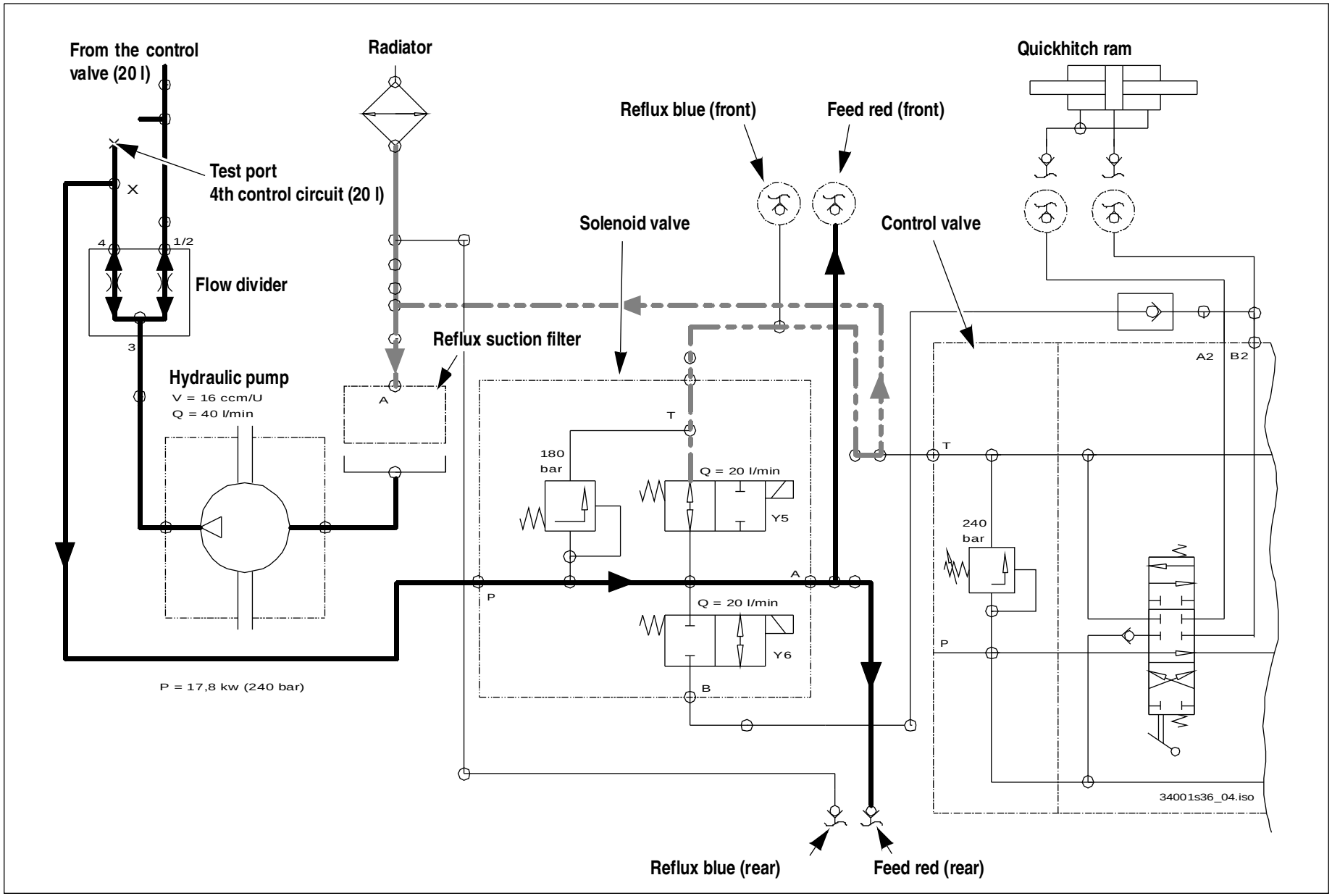

9.40 4th control circuit – solenoid valve with contact: hydraulic diagram

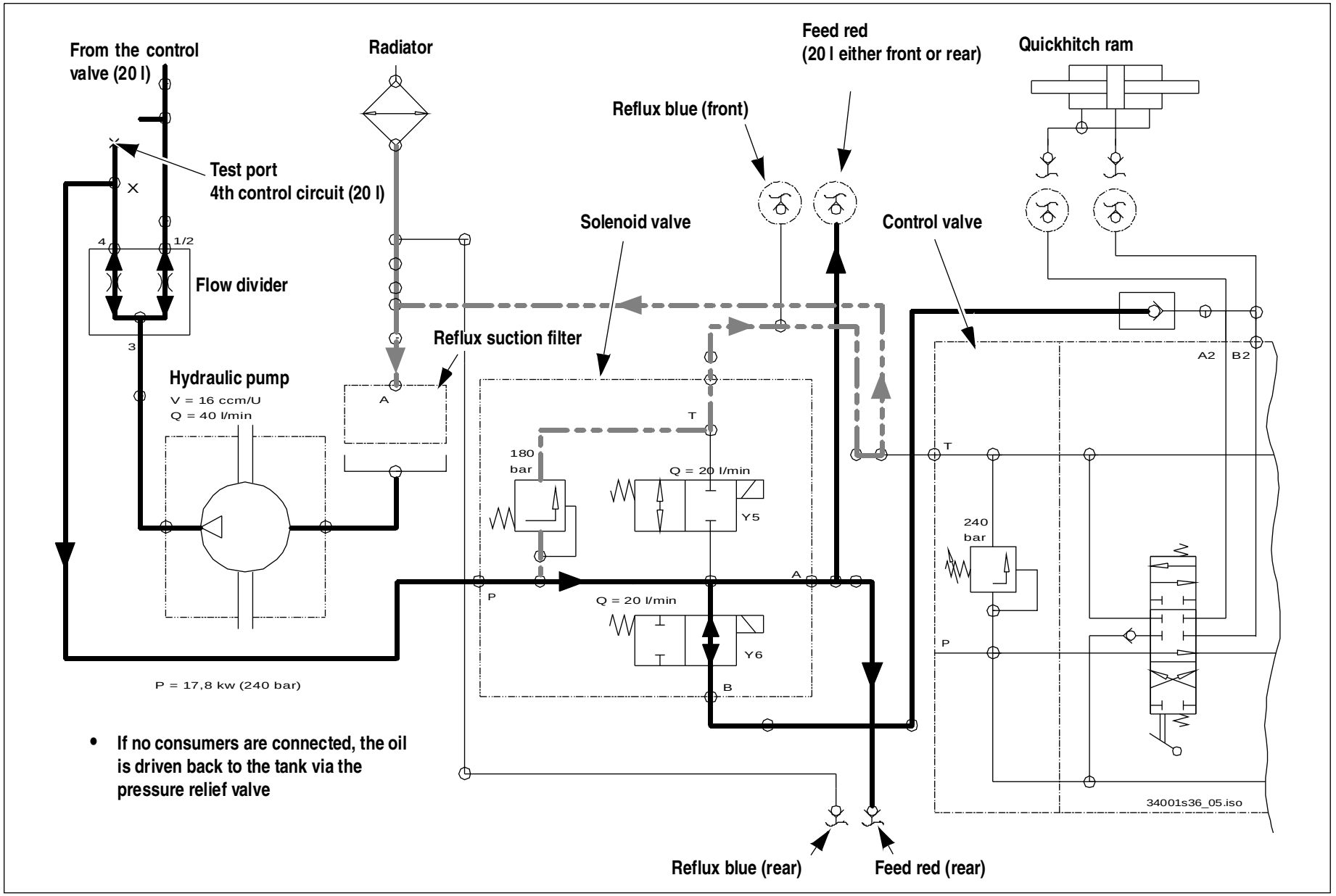

- If no consumers are connected, the oil is driven back to the tank via the pressure relief valve

9.41 3rd + 4th control circuit – solenoid valve with contact: hydraulic diagram

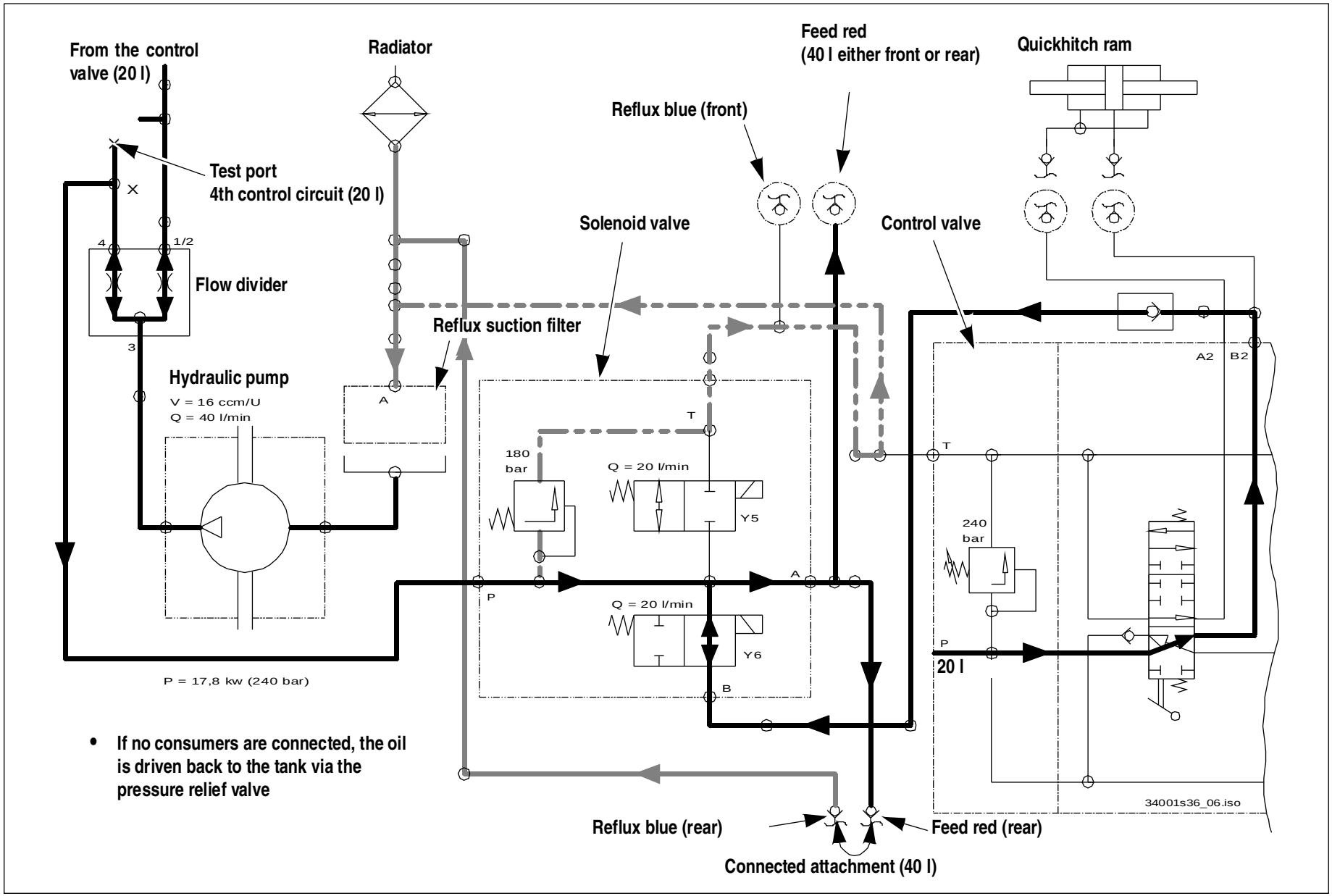

9.42 Test and setting instructions for work hydraulics

Caution!

Run the machine warm to operating temperature (about 50 – 60 °C) before taking any measures or making any settings.

☞ *Adjust valves only with the engine at a standstill*

9.42.1 Test report model 340-01 (180)

Model:	Prod. no. variable displacement pump	Prod. no. variable displacement motor	Serial no.
_____	_____	_____	_____

Test conditions:	Rated oil temperature: 50 – 60 °C

Test features:	Notes:	Rated value: (rpm)	Nominal value: (rpm)	✔
Min. idling speed		1025 – 1075		
Max. idling speed		2780 – 2840		
Work hydraulics	Max. engine revs	235 – 245 bar		
Tilt pressure	At engine revs 1025 – 1075 rpm	115 – 135 bar		
Steering pressure	Max. engine revs	175 – 190		
Wheel speed	Max. engine revs 19 sec over 100 m	18 kph = 140 – 150		
Loader unit lowering	At T_{oil} = 50 °C P_{cyl} = 100 bar T = 10 min	Lift ram max. 50 mm Tilt ram max. 50 mm		
Additional hydraulic control circuits (optional version only)				
Displacement additional front control circuit	180 $^{+10}_{-5}$ bar service pressure at max. engine revs	40 l/min		
Displacement additional rear control circuit	180 $^{+10}_{-5}$ bar service pressure at max. engine revs	40 l/min		
Displacement additional front control circuit + rear 4th control circuit	180 $^{+10}_{-5}$ bar service pressure at max. engine revs	40 l/min front or 40 l/min rear		

9.42.2 Test report model 341-01 / 341-02 (280)

Model:	Prod. no. variable displacement pump	Prod. no. variable displacement motor	Serial no.
_____	_____	_____	_____

Test conditions:	Rated oil temperature: 50 – 60 °C

Test features:	Notes:	Rated value: (rpm)	Nominal value: (rpm)	✔
Min. idling speed		1025 – 1075		
Max. idling speed		2565 – 2615		
Work hydraulics	Max. engine revs	225 – 245 bar		
Tilt pressure	At lower n 1025 – 1075 rpm	115 – 135 bar		
Steering pressure	Max. engine revs	175 – 190		
Wheel speed	Max. engine revs 19 sec over 100 m	18 kph = 115 – 125		
Loader unit lowering	At T_{oil} = 50 °C P_{cyl} = 100 bar T = 10 min	Lift ram max. 50 mm Tilt ram max. 50 mm		
Hydraulic additional control circuit with flow divider (optional version only)				
Displacement additional front control circuit	180 $^{+10}_{-5}$ bar service pressure at max. engine revs	75 l/min		
Displacement additional rear control circuit	180 $^{+10}_{-5}$ bar service pressure at max. engine revs	75 l/min		
Displacement additional front control circuit + rear 4th control circuit	180 $^{+10}_{-5}$ bar service pressure at max. engine revs	75 l/min front or 75 l/min rear		
Neutral circulation of variable displacement pump	Max. revs 75 l/min	60 – 70 bar		
Hydraulic additional control circuit without flow divider (optional version only)				
Displacement additional front control circuit	180 $^{+10}_{-5}$ bar service pressure at max. engine revs	52 l/min		
Displacement additional rear control circuit	180 $^{+10}_{-5}$ bar service pressure at max. engine revs	52 l/min		
Displacement additional front control circuit + rear 4th control circuit	180 $^{+10}_{-5}$ bar service pressure at max. engine revs	52 l/min front or 52 l/min rear		

9.43 Legend for hydraulics diagram model 340-01 (180)

Model 340-01 (180)	
1	Hydraulic steering system
2	Front axle steering ram
3	Rear axle steering ram
4	Priority valve (steering system)
5	Drive – variable displacement pump
6	Hydraulic pump V = 8 cm³/rev / Q = 20 l/min
7	Drain coupling
8	Drive – hydraulic motor
9	Hydraulics radiator
10	Hydraulic reflux suction filter
11	Hydraulic temperature switch
12	Pressure switch
13	Hydraulic oil tank
14	Ventilation – hydraulic oil tank
15	Control valve
16	Solenoid valve 3rd control circuit
17	Tilt ram
18	Control ram (quickhitch facility)
19	Lift ram
20	Pilot control unit
21	Hydraulics stop cock (road travel)
22	Pressure accumulator (emergency lowering)
23	Control valve (float position)
24	Flow divider

Model 340-01 (180)	
25	Hydraulic pump V = 16 cm³/rev / Q = 40 l/min
26	Solenoid valve (additional control circuit)
27	Front quick coupler (blue socket)
28	Front quick coupler (red socket)
29	Rear quick coupler (blue socket)
30	Rear quick coupler (red socket)
31	Non-return valve
32	Valve (hose burst valve)
33	Orifice ø 1.5 mm
34	Orifice ø 2.5 mm

9.44 Hydraulics diagram model 340-01

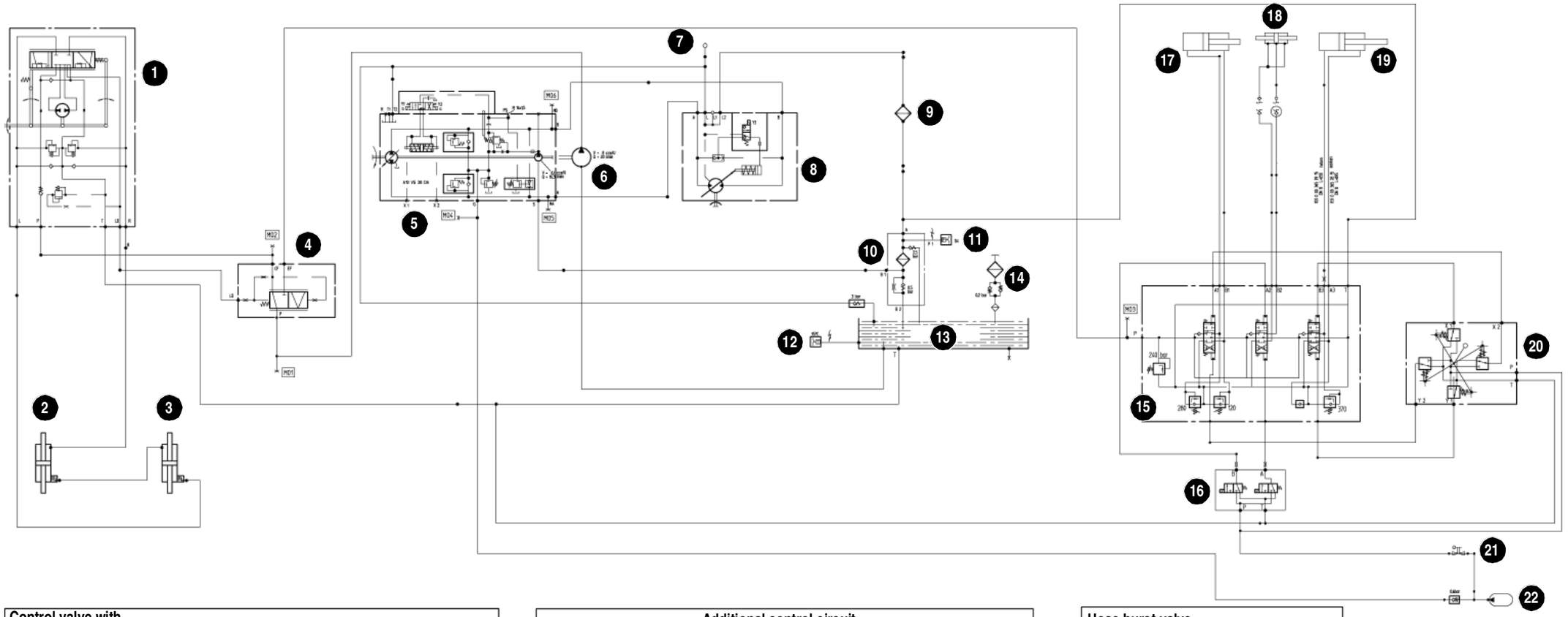

Control valve with float position

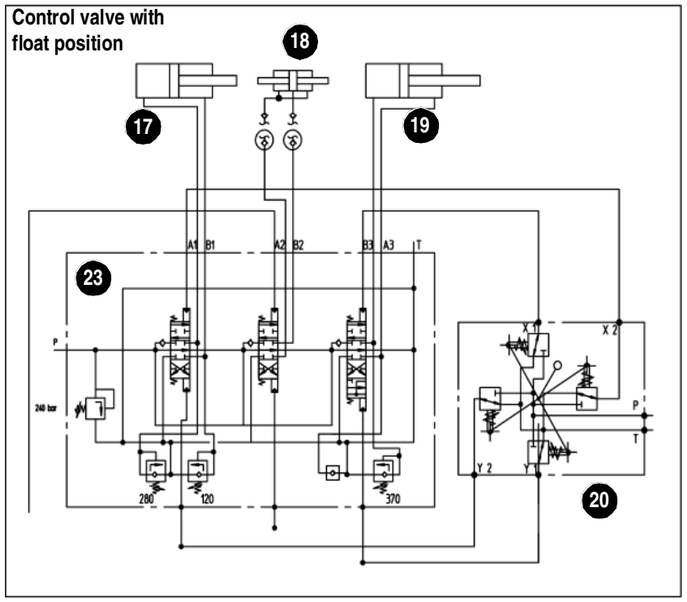

Additional control circuit
Q = 40 l/min + 4th control circuit

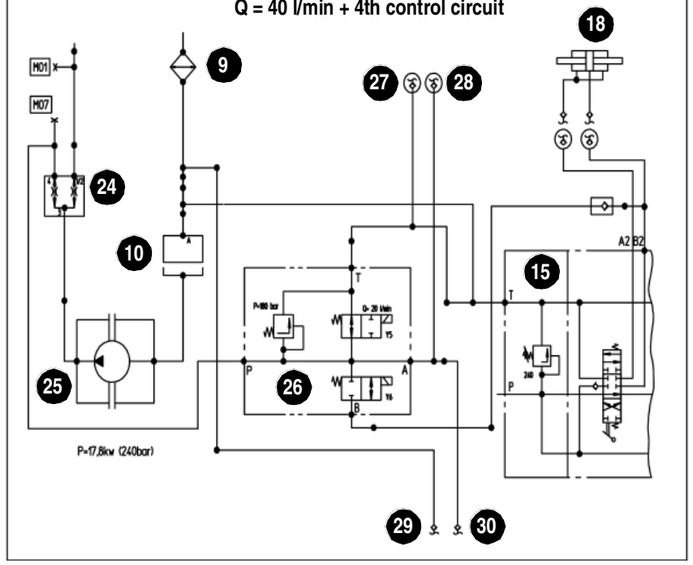

Hose burst valve

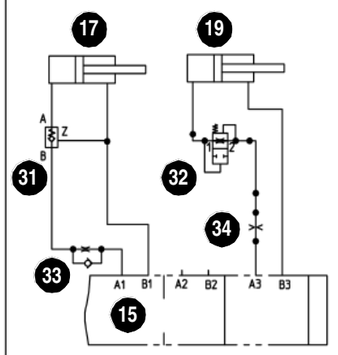

9.45 Hydraulics diagram for model 341-01/02 (280)

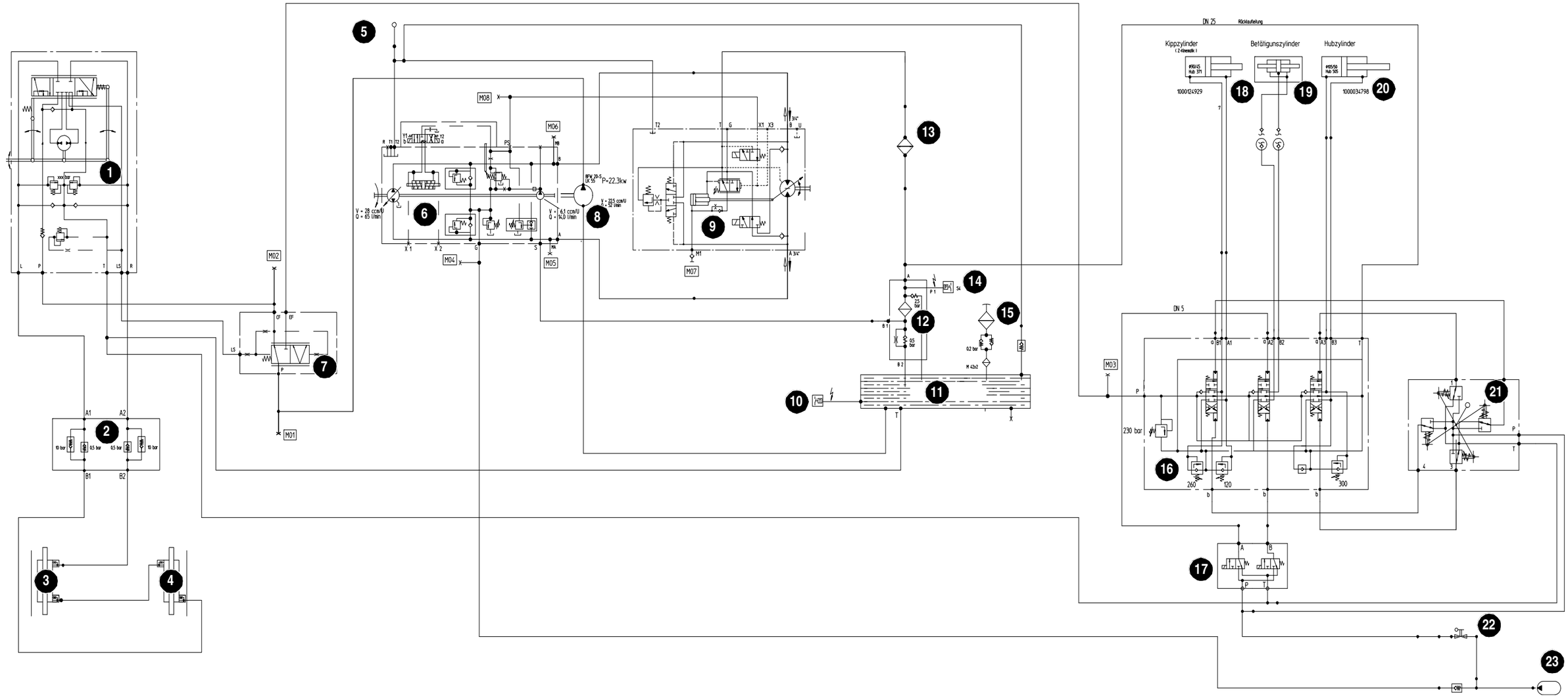

Ref.	Description
1	Hydraulic steering system
2	Valve block 10 bar/0.5 bar
3	Front axle steering ram
4	Rear axle steering ram
5	Drain coupling
6	Drive – variable displacement pump
7	Priority valve (steering system)
8	Drive variable displacement pump V = 22.5 cm³/rev Q = 52 l/min

Ref.	Description
9	Drive hydraulic motor
10	Hydraulic temperature switch
11	Hydraulic oil tank
12	Hydraulic reflux suction filter
13	Hydraulic oil cooler
14	Pressure switch
15	Ventilation – hydraulic oil tank
16	Control valve

Ref.	Description
17	Solenoid valve 3rd control circuit
18	Tilt ram
19	Control ram (quickhitch facility)
20	Lift ram
21	Pilot control unit
22	Hydraulics stop cock (road travel)
23	Pressure accumulator (emergency lowering)

9.46 Hydraulics diagram (option) for model 341-01 (280)

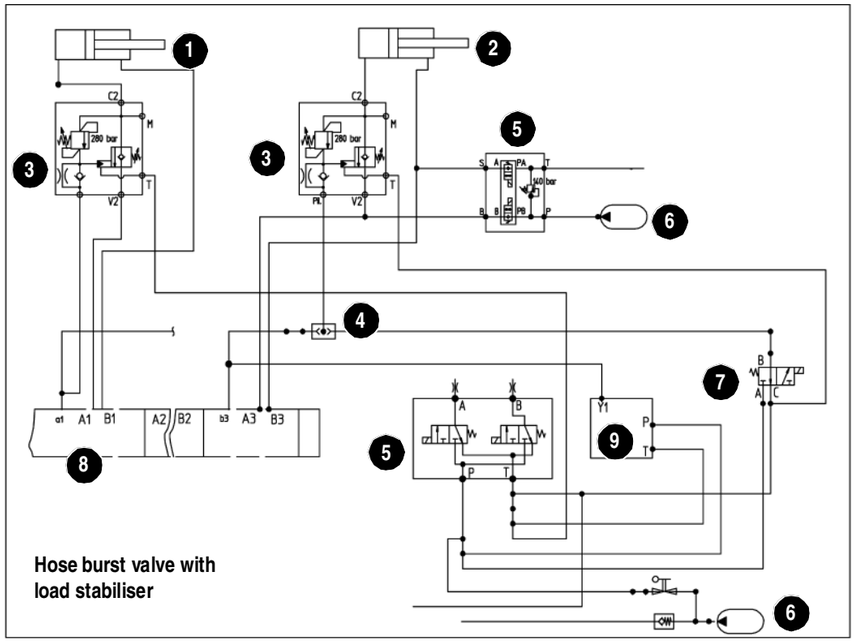

Hose burst valve with load stabiliser

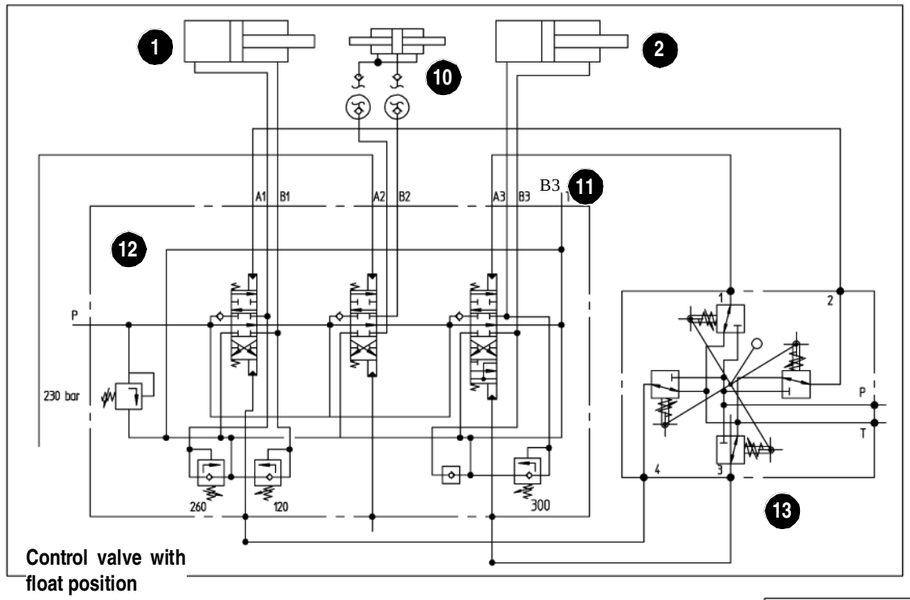

Control valve with float position

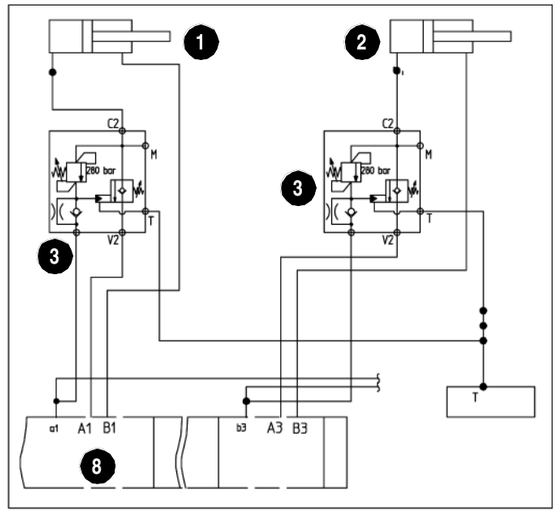

Hose burst valve

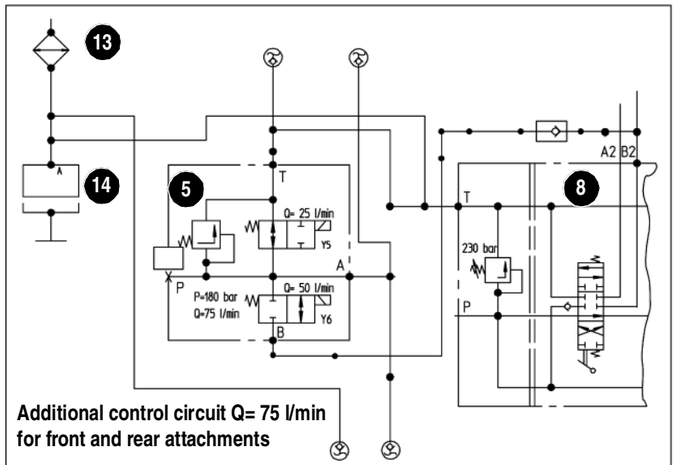

Additional control circuit Q= 75 l/min for front and rear attachments

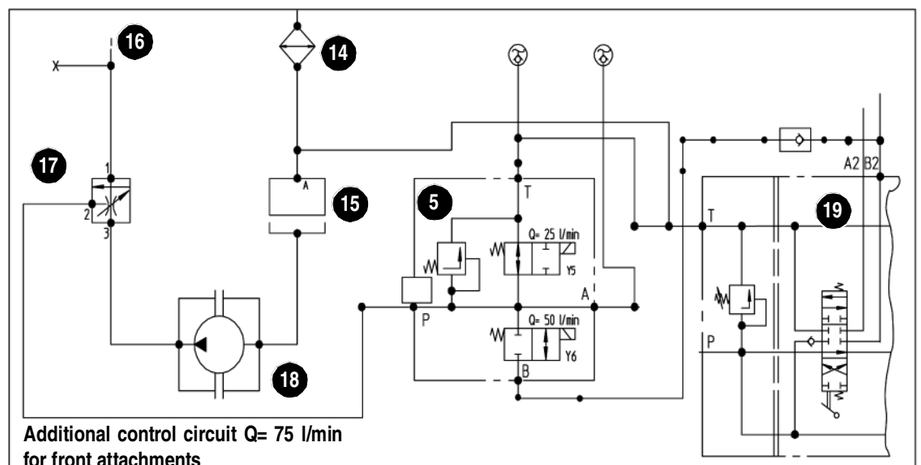

Additional control circuit Q= 75 l/min for front attachments

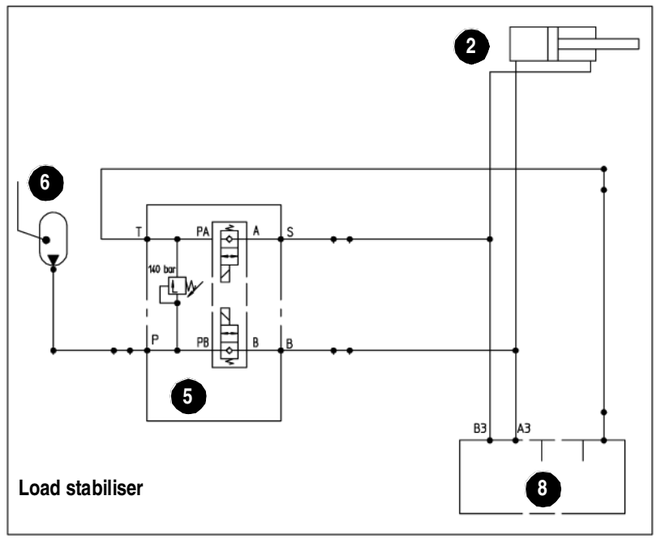

Load stabiliser

Model 341-01 (280)	
1	Tilt ram
2	Lift ram
3	Hose burst valve (1x lift ram 1x tilt ram)
4	Shuttle valve
5	Solenoid valve

Model 341-01 (280)	
6	Pressure accumulator (load stabiliser)
7	Valve
8	Control valve
9	Pilot control unit
10	Control ram (quickhitch facility)

Model 341-01 (280)	
11	Resuction
12	Control valve (float position)
13	Pilot control unit
14	Radiator
15	Reflux suction filter

Model 341-01 (280)	
16	Steering system priority valve
17	Flow divider
18	Hydraulic pump V = 32 cm³/rev / Q = 75 l/min
19	Control valve (additional control circuit)

9.47 Hydraulics diagram (option) for model 341-02 (280)

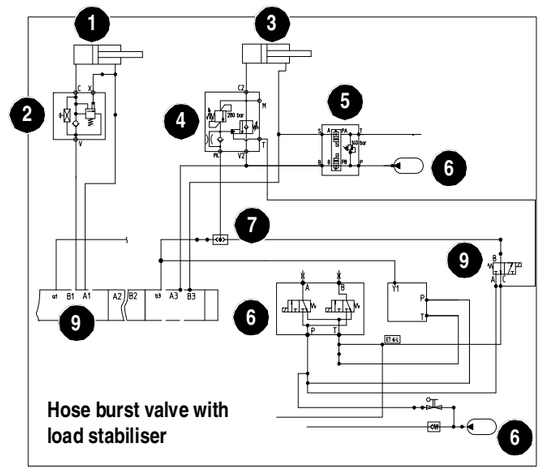

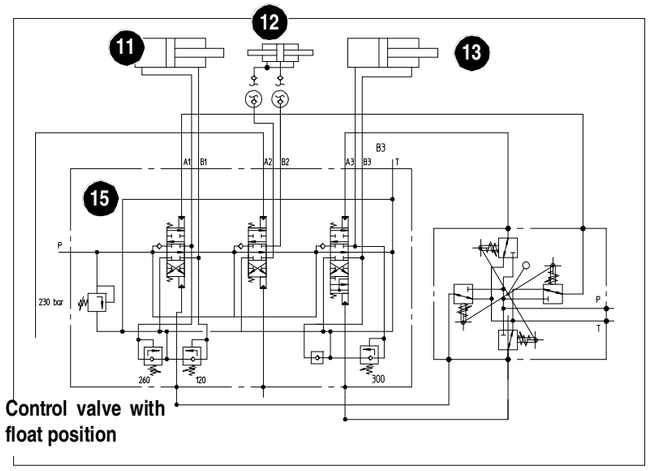

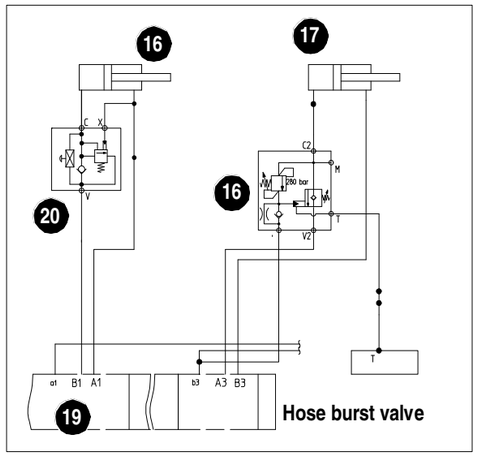

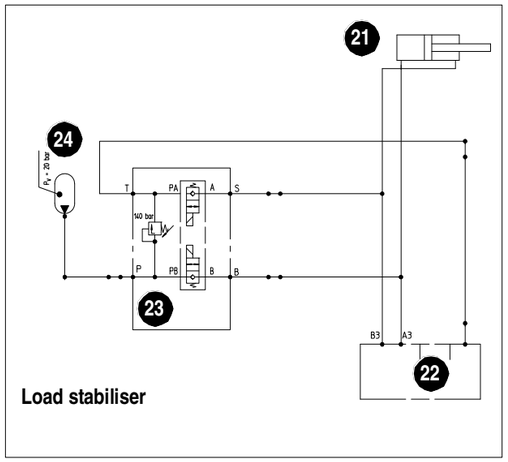

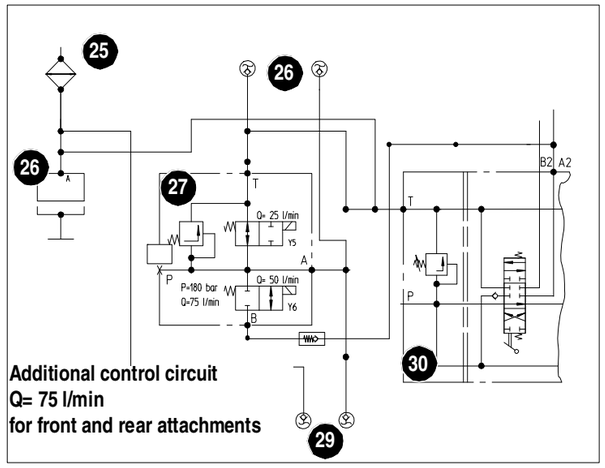

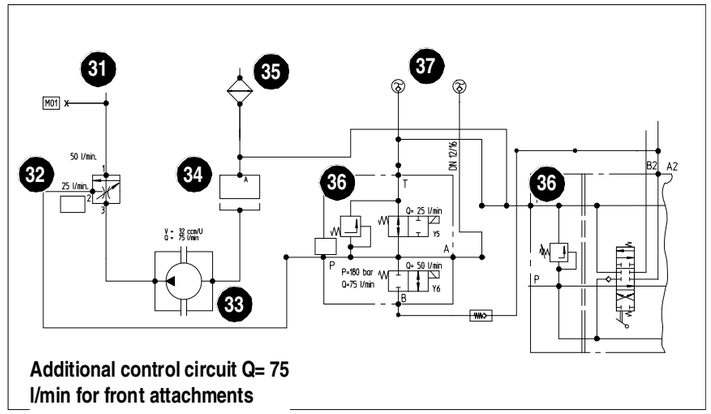

Ref.	Description
1	Tilt ram
2	Hose burst valve
3	Lift ram
4	Valve
5	Solenoid valve
6	Pressure accumulator
7	Shuttle valve
8	Solenoid valve
9	Solenoid valve 3/2
10	Control valve
11	Tilt ram

Ref.	Description
12	Control ram
13	Lift ram
14	Pilot control unit
15	Control valve (float position)
16	Tilt ram
17	Lift ram
18	Valve (hose burst valve)
19	Control valve
20	Valve (hose burst valve)
21	Lift ram
22	Control valve

Ref.	Description
23	Solenoid valve
24	Pressure accumulator
25	Radiator
26	Reflux suction filter
27	Solenoid valve
28	Front quick coupler (blue/red)
29	Rear quick coupler (blue/red)
30	Control valve (additional control circuit)
31	Priority valve
32	Flow divider
33	Hydraulic pump V = 32 cm³/rev / Q = 75 l/min

Ref.	Description
34	Reflux suction filter
35	Radiator
36	Solenoid valve
37	Front coupling
38	Control valve (additional control circuit)

Electric system

10 Electric system

10.1 Ohm's Law (current, voltage, resistance); power

It describes the interrelation between current, voltage and resistance.

Current “I” – Ampere (A)
Voltage “U” – Volt (V)
Resistance “R” – Ohm (Ω)

! Mnemonic:

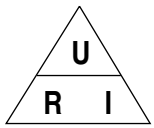

Output

Power "P" – Watt (W)

$P = U \times I = R \times I^2 = U^2/R$

10.2 Multifunction measuring device

- Measurements of values (U, R, I, f)
- Continuity test
- Diode test

Calculate measuring range using known data (P, U, R, I)
and set before measuring!

Observe AC/DC basic setting.

➥ AC = alternating current/voltage;

➥ DC = direct current/voltage

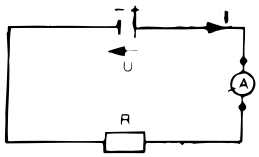

- Measuring current (ignition switched on):
- Black cable in COM socket (earth),
- red cable in A socket or mA socket; connect in series to consumer.

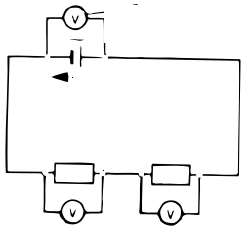

- Measuring voltage (ignition switched on):
- Black cable in COM socket (earth),
- red cable in V socket;
- connect in parallel to consumer.
- Measuring resistance (ignition switched off):
- Black cable in COM socket (earth),
- red cable in Ω socket;
- connect in parallel to consumer (see measuring voltage).

10.3 Terminal description

(extract from DIN 72 552)

Terminal descriptions and cable descriptions are not identical because equipment with different terminal descriptions can be connected to both ends of a cable. If there are not enough terminal descriptions (multiple connectors), the terminals are marked with continuous number or letter codes without any standardised function assignment.

Terminal	Meaning
1	**Ignition coil, distributor (low voltage)**
	Ignition distributor with two separate electric circuits
1a	to ignition contact breaker I
1b	to ignition contact breaker II
2	Short-circuit terminal (magneto ignition)
4	Ignition coil, ignition distributor High voltage
	Ignition distributor with two separate electric circuits
4a	from ignition coil I, terminal 4
4b	from ignition coil II, terminal 4
15	Switched plus behind battery (output ignition [drive] switch)
15a	Output at dropping resistor to ignition coil and starter
	Preheating start switch
17	Start
19	Preheating
	Battery
30	Input from + battery terminal, direct
	12/24 V battery changeover relay
30a	Input from + terminal of battery II
	Return line to battery
31	Minus terminal or earth, direct
	Return line to battery
31b	Minus terminal or earth, via switch or relay (switched negative)
	12/24 V battery changeover relay
31a	Return line to minus terminal of battery II
31c	Return line to minus terminal of battery I
	Electric motors
32	Return line[1)]
33	Main terminal connection[1)]
33a	Self-parking switch-off
33b	Shunt field
33f	For second lower speed range
33g	For third lower speed range
33h	For fourth lower speed range
33L	Counterclockwise rotation
33R	Clockwise rotation
	Starter
45	Separate starter relay, output; Starter, input (main current)
	Two-starter parallel operation Starting relay for engagement current
45a	Output starter I, Input starters I and II
45b	Output starter II
48	Terminal on starter and on start-repeating relay (to monitor starting)
	Turn indicator unit (pulse generator)
49	Input
49a	Output
49b	Output, 2nd turn indicator circuit
49c	Output, 3rd turn indicator circuit
	Starter
50	Starter control (direct)
	Battery changeover relay
50a	Output for starter control

Terminal	Meaning
	Starter control
50b	with parallel operation of 2 starters with sequential control
	Starting relay for sequential control of the engagement current during parallel operation of 2 starters
50c	Input at starting relay for starter I
50d	Input at starting relay for starter II
	Start locking relay
50e	Input
50f	Output
	Start repeat relay
50g	Input
50 h	Output
	AC alternator
51	Direct current voltage at rectifier
51e	Direct current voltage at rectifier with choke coil for daytime driving
	Trailer signal
52	Signals from trailer to towing machine
53	**Wiper motor**, input (+)
53a	Wiper (+), self-parking switch-off
53b	Wiper (shunt winding)
53c	Electric window washer pump
53e	Wiper (brake winding)
53i	Wiper motor with permanent magnet and third brush (for higher speed)
	Trailer signal
54	For lamp combinations and trailer plug connections
	Brake lights
54g	Pneumatic valve for additional retarding brake, electromagnetically actuated
55	**Fog lights**
56	Headlight
56a	High beam and high beam telltale
56b	Low beam
56d	Headlight flasher contact
57	**Side marker light** for motorcycles (also for cars, trucks etc. in other countries)
57a	**Parking light**
57L	Parking light, left
57R	Parking light, right
58	**Side marker, rear, numberplate and instrument panel lights**
58b	Rear light changeover for single-axle tractors
58c	Trailer plug-and-receptacle assembly for single-conductor rear light cable with fuse in trailer
58d	Variable-intensity instrument panel lights, side marker and rear light
58L	Left
58R	Right, numberplate light
	AC alternator (magneto alternator)
59	Alternating voltage, output, rectifier, input
59a	Charging armature, output
59b	Rear light armature, output
59c	Brake light armature, output
61	**Alternator charge telltale**
	Tone sequence control device
71	Input
71a	Output to horns 1 + 2 low
71b	Output to horns 1 + 2 high
72	**Alarm switch** (rotating beacon)
75	Radio, cigarette lighter
76	Loudspeaker
77	Door valve control

Terminal	Meaning
	Switches
	Break-contact and changeover switches
81	Input
81a	1st output, break side
81b	2nd output, break side
	Make-contact switch
82	Input
82a	1st output
82b	2nd output
82z	1st input
82y	2nd input
	Multiple position switch
83	Input
83a	Output, position 1
83b	Output, position 2
83L	Output, left-hand side position
83R	Output, right-hand side position
	Current relay
84	Input, actuator and relay contact
84a	Output, actuator
84b	Output, relay contact
85	Switching relay – output, actuator (end of winding negative or earth)
	Input, actuator
86	Start of winding
86a	Start of winding or 1st winding
86b	Winding tap or 2nd winding
	Relay contact for break and changeover contacts
87	Input
87a	1st output (break side)
87b	2nd output
87c	3rd output
87z	1st input
87y	2nd input
87x	3rd input
	Relay contact for make-contact
88	Input
	Relay point for make-contact and changeover contacts (make side)
88a	1st output
88b	2nd output
88c	3rd output
	Relay contact for make-contact
88z	1st input
88y	2nd input
88x	3rd input
Alternator and governor	
B+	Battery positive
B-	Battery negative
D+	Dynamo positive
D-	Dynamo negative
DF	Dynamo field
DF 1	Dynamo field 1
DF 2	Dynamo field 2
U, V, W	Three-phase alternator – three-phase terminals
Turn indicator (turn indicator unit)	
C	First telltale
C0	Main terminal connection for separate indicator circuits actuated by the turn indicator switch
C2	Second telltale
C3	Third telltale (e.g. when towing two trailers)
L	Indicator light, left
R	Indicator light, right

10.4 Cable colour coding

The cables are colour-coded according to DIN 72551 Part 4. Refer to the 21 pin cab/frame interface or the explanation in the wiring harness drawings for other colours not listed in this DIN standard.

Extract from DIN 72551, sheet 4

Line		Basic colour	Identification colour
From	**to**		
Ignition coil I	Ignition distributor (low-voltage ignition lead)	Green	-
Ignition coil II	Ignition distributor (low-voltage ignition lead)	Green	Red
Battery	Starter	Black	-
Battery	Earth (if bare earth lead is not used)	Black	-
Starter	Alternator	Red	-
Starter	Control panel (30)	Red	-
Light switch (30)	Ignition switch (30)	Red	-
Control panel (30) or light switch (30)	Fuse	Red	-
Fuse	Hand lamp, radio, clock etc.	Red	-
Control panel (15/54)	Heater plug and starter switch; heater-plug telltale	Black	-
Heater plug and starter switch; heater-plug telltale	Glow plugs	Black	-
Ignition switch (15/54)	Ignition coil	Black	-
Ignition switch or control panel (54/15/61a)	Telltales	Black	-
Control panel or ignition switch (15/54)	Fuse	Black	-
Fuse box	Brake light	Black	Red
Fuse box	Turn indicator switch	Black	White-green
Turn indicator switch	Turn indicator, left	Black	White
Turn indicator switch	Turn indicator, right	Black	Green
Telltale	Turn indicator	Light blue	-
Fuse	Cigarette lighter	Black	-
Fuse	Heated window	Black	Yellow-red
Fuse	1st horn	Black	Yellow
Fuse	2nd and 3rd horn	Black	Yellow-light blue
Horns	1 pole horn pushbutton (earth)	Brown	-
Fuse	Wipers	Black	Purple
Battery charge telltale	Terminal 61 of alternator or reverse current cutout	Light blue	-
Fuse	Main beam telltale	Light blue	White
Oil pressure gauge (indicator)	Oil pressure switch	Light blue	Green
Fuel level indicator	Fuel tank	Light blue	Black
Tyre-pressure warning device	Tyre-pressure drop indicator	Light blue	Yellow
Control panel bzw. Lichtschalter	Low beam switch	White	Black
Low beam switch (a)	Fuse	White	-
Fuse	Main headlight, left	White	-
Fuse	Main headlight, right	White	-
Low beam switch (b)	Fuse	Yellow	-

Line		Basic colour	Identification colour
From	to		
Fuse	Low beam, left	Yellow	-
Fuse	Low beam, right	Yellow	-
Control panel or light switch (58)	Fuse	Grey	-
Fuse	Rear light, side light and parking light left	Grey	Black
Fuse	Numberplate light (combined with rear left light)	Grey	Black
Fuse	Rear light, side light and parking light, right	Grey	Red
Fuse	Numberplate light (combined with rear right light)	Grey	Red
Fuse	Numberplate light (only if special line is laid)	Grey	-
Fuse	Dome light	Red	-
Control panel (57)	Fuse	Grey	Green
Control panel bzw. Lichtschalter	Instrument panel light	Grey	Red
All consumers except the battery earth lead if the use of bare lines is not possible	Earth	Brown	-
Battery changeover switch (50)/starter pushbutton or heater plug and starter switch	Starter	Black	-

Abbreviation – colour coding

Colour	Abbreviation old	Abbreviation new
Black	sw	BK
Brown	br	BN
Red	rt	RD
Orange	or	OG
Yellow	ge	YE
Green	gn	GN
Blue	bl	BU
Violet	vi	VT
Grey	gr	GY
White	ws	WH
Pink	rs	PK
Gold	-	GD
Turquoise	tk	TQ
Silver	-	SR

10.5 Relays

10.5.1 Use, mode of function

Relays are used for switching electric loads (high currents) whereby the control power of the relay coil is relatively low. Relays can therefore be controlled by micro electronics or micro switches (e.g. touchpad keyboards, sensors). The switch contacts can be make-contact, break-contact or changeover switches. These undertake the actual switching function.

10.5.2 Terminal description on relay

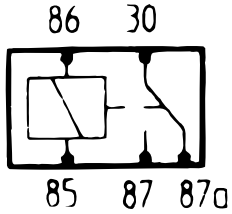

Zero-centre relay

86 = Start of coil (control line)

85 = End of coil (earth)

30 = Input (load line)

87 = Make-contact switch output (load line)

87 a= Break-contact switch output (load line)

10.6 Alternator, starter, battery

Description	12 V 55 A
Alternator	12 V 55 A
Starter	12 V 1.2 kW **(model 340-01 / 180)** 12 V 1.4 kW **(model 341-01 / 280)**
Battery	12 V 72 Ah

10.7 Main fuse box with relays (engine TNE 88)

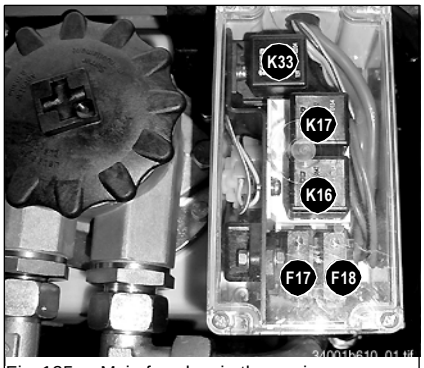

Fig. 125: Main fuse box in the engine compartment

Fuse no.	Rated current (A)	Protected circuit
F17	80 A	– Main fuse
F18	40 A	– Preheating/start fuse (starter)

Relay no.	Protected circuit
K 16	Preheating
K 17	Start
K 33	Cutoff solenoid

10.8 Relays (engine TNE 88)

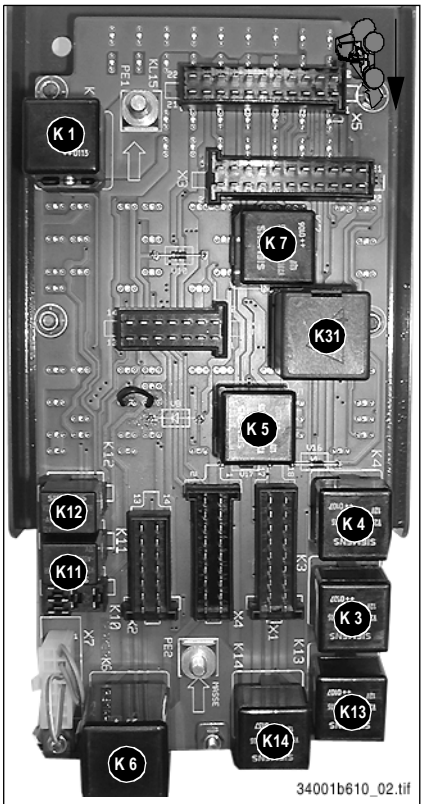

Fig. 126: Relays

The relays are installed in the control lever base under the switch panel (as seen from below the fuse board)

Switching relay no.	Rated current (A)	Protected circuit	Order no.
K 1	70	High current relay – terminal 15	1000154041
K 3	40/60	Solenoid valve – reverse driving	1000154043
K 4	40/60	Solenoid valve – forwards driving	1000154043
K 5	40/60	Front attachments	1000154043
K 6		Turn indicator relay	1000147918
K 7	40/60	Wipers	1000154043
K 11	20/35	Changeover (3rd control circuit)	1000125244
K 12	20/35	Changeover (3rd control circuit)	1000125244
K 13	20/35	Unlock (quickhitch facility)	1000125244
K 14	40/60	Lock (quickhitch facility)	1000154043
K 31		Time-lag relay $^{5\ min}$ (rear window heating)	1000027071

10.9 Main fuse box with relays (engine TNV 88)

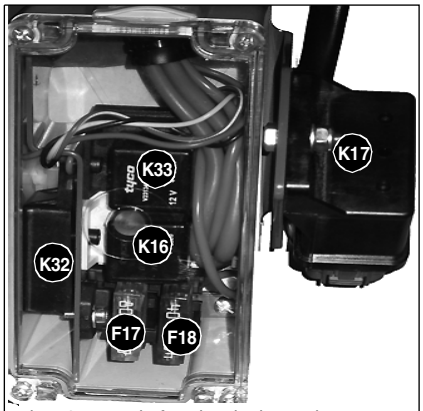

Fig. 127: Main fuse box in the engine compartment

Fuse no.	Rated current (A)	Protected circuit
F17	70 A	Main fuse
F18	40 A	Preheating/start fuse (starter)

Relay no.	Protected circuit
K 16	High current relay preheating
K 17	Start high current relay
K 32	Time lag relay for cutoff solenoid
K 33	High current relay cutoff solenoid

10.10 Relays (engine TNV 88)

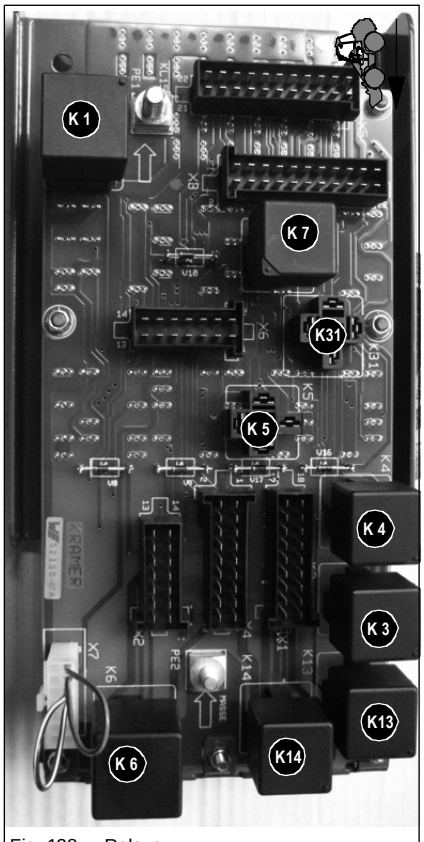

Fig. 128: Relays

The relays are installed in the control lever base under the switch panel (as seen from below the fuse board)

Switching relay no.	Rated current (A)	Protected circuit	Order no.
K 1	70	High current relay – terminal 15	1000154041
K 3	40/60	Solenoid valve – reverse driving	1000154043
K 4	40/60	Solenoid valve – forwards driving	1000154043
K 5	40/60	Front attachments	1000154043
K 6		Turn indicator relay	1000147918
K 7	40/60	Wipers	1000154043
K 13	20/35	Unlock (quickhitch facility)	1000125244
K 14	40/60	Lock (quickhitch facility)	1000154043
K 31		Time-lag relay $^{5\ min}$ (rear window heating)	1000027071

10.11 Fuse box in control lever base

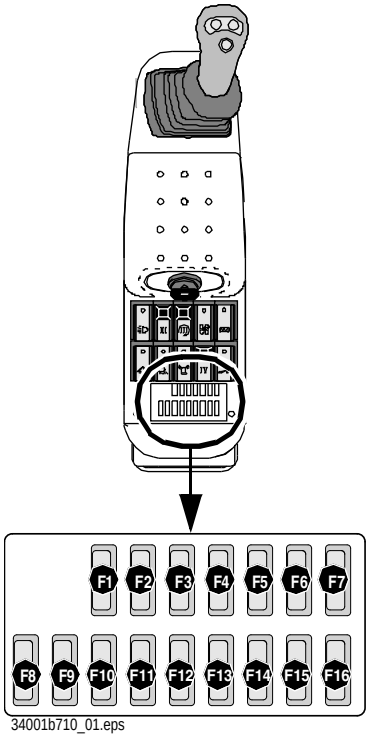

Fig. 129: Fuse box

Fuse no.	Rated current (A)	Protected circuit
F1	7.5 A	– High beam (left)
F2	7.5 A	– High beam (right)
F3	5 A	– Parking light (left)
F4	5 A	– Parking light (right)
F5	10 A	– Start
F6	25 A	– Additional lights
F7	25 A	– Lights
F8	7.5 A	– Low beam (left)
F9	7.5 A	– Low beam (right)
F10	5 A	– Relays, telltales, cutoff solenoid
F11	15 A	– Wiper
F12	15 A	– Valves
F13	7.5 A	– Driving
F14	30 A	– Fan, rear window heating
F15	7.5 A	– Turn indicator
F16	5 A	– Radio

10.12 Board: overview

Relays (engine TNE 88)

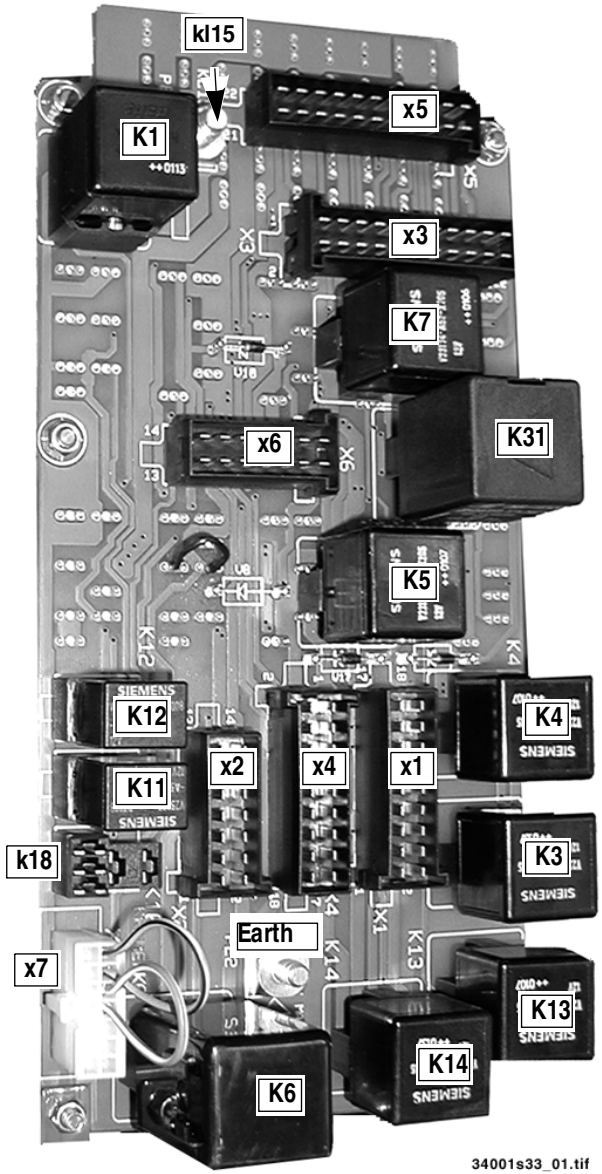

Relays (engine TNV 88)

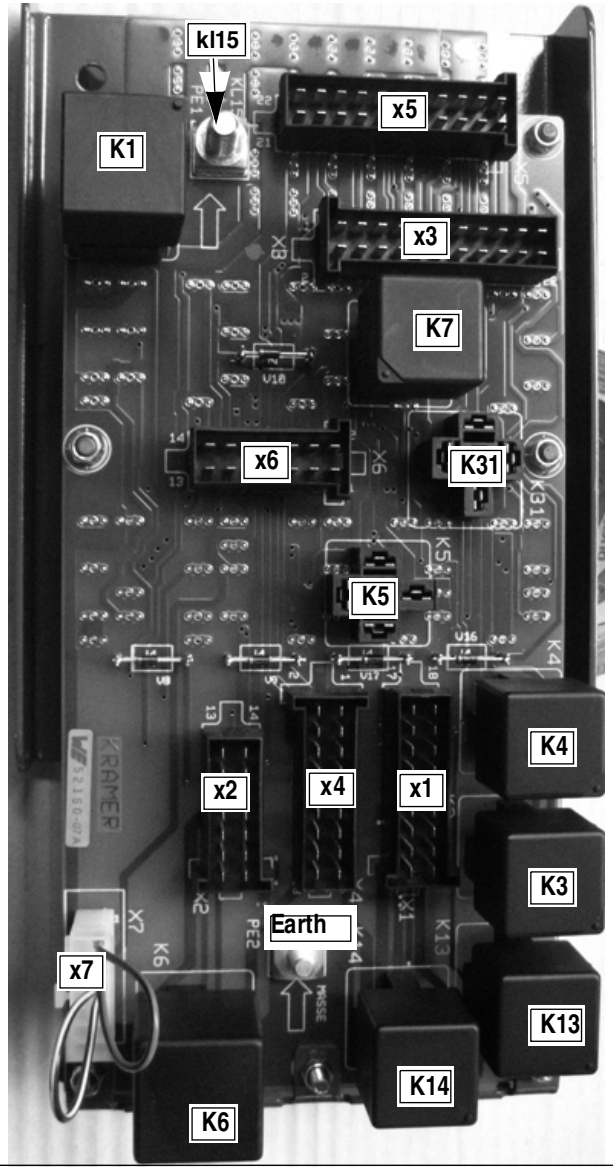

10.13 Plug and socket connection: wiring harness 0113300210 frame – cab

Socket x16
wiring harness – frame (0113300210)





Connector P01
wiring harness – cab (0000809831)

10.14 Plug and socket connection: wiring harness 0113300110 – instrument panel

Plug and socket connections located in steering console

Plug and socket connection: drive lever – multifunctional lever

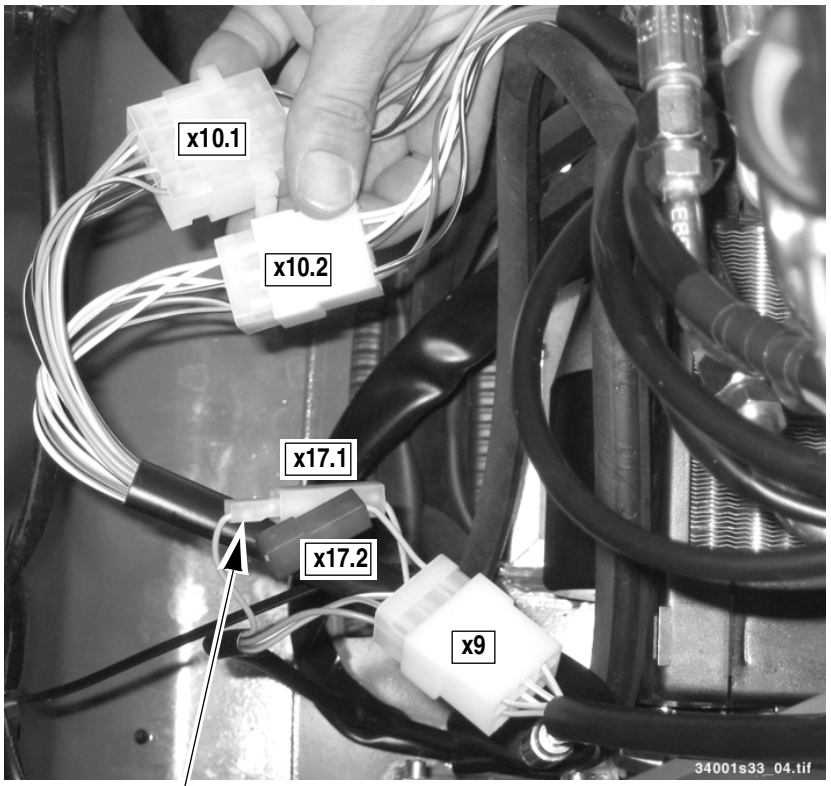

x17 plug and socket connection
Connection on model 304-01 (180) white/white
Connection on model 341-01 (280) white – red

Plug and socket connection: instrument panel



Lighting
(fuel level indication)

Fuel level indicator

Cigarette lighter

S15 switch (hazard warning system)

Instrument panel

10.15 Plug and socket connection: wiring harness 0000809831 – working light/rotating beacon

VT/GN rear right working light



Dummy plug

Plug and socket connection: rear rotating beacon (connection green cable)

Dummy plug



10.16 Retrofitting a rotating beacon

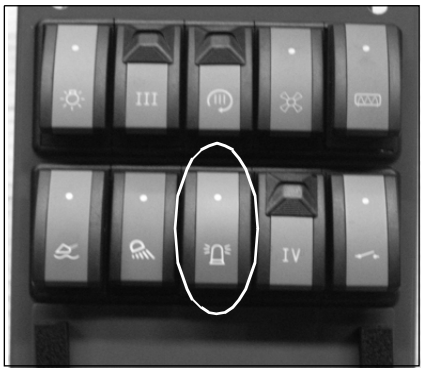

☞ Mount the bracket for the rotating beacon at the rear right

➥ The cable is behind the roof lining

➥ Cable colours: light blue and black for earth

☞ Mount the switch in the lower row of the switch panel

10.17 Retrofitting a working light (at rear of cab)

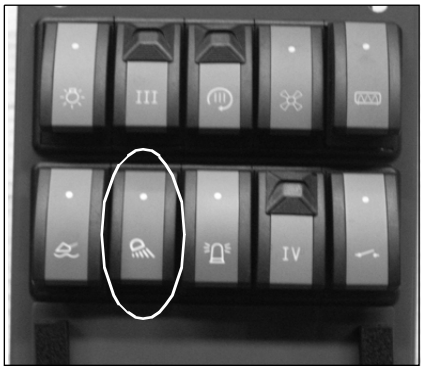

☞ Mount the working light at the rear left

➥ The cable is behind the roof lining

➥ Cable colours: light blue and black for earth

☞ Mount the switch in the lower row of the switch panel

10.18 Retrofitting a working light (at front of cab)

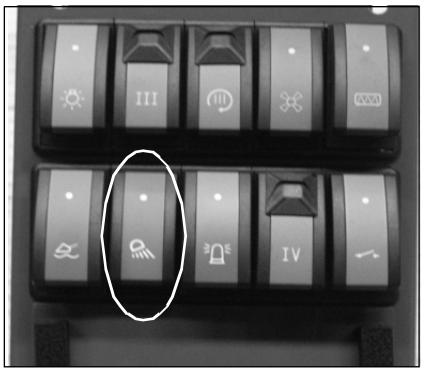

☞ Mount the working light at the front

➥ The cable is behind the roof lining

➥ Cable colours: light blue and black for earth

☞ Mount the switch in the lower row of the switch panel

10.19 Wiring diagrams, wiring harnesses

10.19.1 Cable colours: steering-column control lever S2 and S3 to plugs 10.1, 10.2 and X9

	Slot no.	Description in diagram	Colour
Plug 10.1	1	53a	BK/BU
	2	53 (II)	GY
	3	53	GN
	4	31b	BU
	5	49	VT/WH
	6	L	VT/GN
	7	R	VT/RD
	8		

	Slot no.	Description in diagram	Colour
Plug 10.2	(1)	H	BN/YE
	(2)	30	BK/VT
	(3)	56b	YE
	(4)	53c	BK/YE
	(5)	56	WH/YE
	(6)	56a	WH
	Slot no.	**Description in diagram**	**Colour**
Plug X 9	1	15	BU
	2	2	YE
	3	N	VT
	4	V	BU/YE
	5	R	WH/GN
	6	1	GY

10.19.2 Legend: Wiring harness 1000110533 (engine – frame TNV 88)

No.	From	To	Colour	mm²
1	X1 (1) 18 pole plug (K14 (87))	Y7 (1) solenoid valve 3rd control circuit electric	BN/YE	1
2	X1 (2) 18 pole plug (K13 (87))	Y8 (1) solenoid valve 3rd control circuit electric	BN/BK	1
3	X1 (14) 18 pole plug (K4 (87))	Y2 solenoid valve forwards	GN/VT	1
4	X1 (4) 18 pole plug (K3 (87))	Y3 reverse driving solenoid valve	WH/VT	1
5	X1 (3) 18 pole plug (S1 (50a) preheating start switch)	K17 starting relay	BU/BK	1
6	X1 (6) 18 pole plug (X9 steering-column control lever)	Y4 (1) 1st/2nd speed solenoid valve	GY/GN	1
7	X1 (16) 18 pole plug (S11 switch 4th control circuit)	Y5 (1) solenoid valve 4th control circuit	Pink	1
8	X1 (10) 18 pole plug (H8 hydraulic oil pressure telltale)	S18 hydraulic oil pressure switch	BU/YE	1
9	X1 (8) 18 pole plug (H7 hydraulic oil temperature telltale)	S20 hydraulic oil temperature switch	BU/RD	1
10	X1 (9) 18 pole plug (H6 engine oil pressure telltale)	S19 engine oil pressure switch	BU/GN	1
11	X1 (7) 18 pole plug (H6 coolant temperature telltale)	S21 temperature switch coolant	BU/WH	1
12	X1 (12) 18 pole plug (P2 fuel level indication)	B1 fuel level sensor	VT/BU	1
13	X1 (11) 18 pole plug (S1 (19) preheating telltale)	K16 (86) high current relay preheating	BU/GY	1
14	X1 (13) 18 pole plug (S16 (1) handbrake switch)	V1 blocking diode	BK	1
15	X1 (5) 18 pole plug (F10, 5 A)	Y1 cutoff solenoid	BK/WH	1
16	X1 (16) 18 pole plug (S11 switch 4th control circuit)	Y6 (1) solenoid valve 4th control circuit electric	Pink	1
17	X1 (15) 18 pole plug (H1 alternator charge telltale)	Alternator G1 (D+) (PIN 1)	BU	1
18	V1 blocking diode	K17 starting relay	BK	1
19	----------	----------	-----	---
20	X3 (18) 22 pole plug (K5, (87))	X11 front socket (54)	RD/YE	1.5
21	X3 (3) 22 pole plug (F4 5 A)	X11 front socket (58R) clearance light	GY/RD	1
22	X3 (4) 22 pole plug (F4 5 A)	E1 (4) 6 pole plug, front right parking light	GY/RD	1
23	X3 (5) 22 pole plug (F4 5 A)	E2 rear right light	GY/RD	1
24	X3 (2) 22 pole plug (F4 5 A)	X12 rear socket (5/58 R) rear light	GY/RD	1
25	X3 (6) 22 pole plug (F3 5 A)	X11 front socket (58L) clearance light	GY/BK	1
26	X3 (8) 22 pole plug (F3 5 A)	E3 (4) 6 pole plug, front left parking light	GY/BK	1
27	X3 (9) 22 pole plug (F3 5 A)	E4 rear left light	GY/BK	1
28	X3 (10) 22 pole plug (F3 5 A)	X12 rear socket (7/58 L) rear light	GY/BK	1
29	X3 (7) 22 pole plug (X10.2 steering-column control lever)	B2 horn	BN/YE	1.5
30	X3 (20) 22 pole plug (K3, (87))	B3 backup warning system	WH/VT	1
31	X3 (13) 22 pole plug (F2, 7.5 A)	E5 (3) 6 pole plug (56a) high beam (right)	WH	1.5
32	X3 (11) 22 pole plug (F9, 7.5 A)	E5 (2) 6 pole plug (56b) low beam (right)	YE	1.5
33	X3 (15) 22 pole plug (F1, 7.5 A)	E6 (3) 6 pole plug (56a) high beam (left)	WH/BK	1.5
34	X3 (21) 22 pole plug (F8, 7.5 A)	E6 (2) 6 pole plug (56b) low beam (left)	YE/BK	1.5
35	X3 (12) 22 pole plug (X10.1 (7) steering-column control lever)	H15 (5) 6 pole plug turn indicator (right)	BK/WH	1
36	X3 (16) 22 pole plug (X10.1 (7) steering-column control lever)	H16 turn indicator (rear right)	BK/WH	1
37	X3 (14) 22 pole plug (X10.1 (7) steering-column control lever)	X12 rear socket (4/R) turn indicator	BK/WH	1
38	X3 (19) 22 pole plug (X10.1 (6) steering-column control lever)	H13 (5) 6 pole plug turn indicator (front left)	BK/GN	1
39	X3 (17) 22 pole plug (X10.1 (6) steering-column control lever)	H14 turn indicator (rear left)	BK/GN	1
40	X3 (22) 22 pole plug (X10.1 (6) steering-column control lever)	X12 rear socket (1/L) turn indicator	BK/GN	1
41	Power supply board	F17 (80 A) main fuse	RD	10
42	Earthing point board	Earth connection	BK	4
43	F17 (80 A) main fuse	M1 starter	RD	10
44	F18 (40 A) preheating fuse	F17 (80 A) main fuse	RD	6
45	F18 (40 A) preheating fuse	K17 starting relay	RD	6
46	F18 (40 A) preheating fuse	K16 (30) high current relay preheating	RD	4
47	F18 (40 A) preheating fuse	K33 (30) cutoff solenoid relay	RD	4
48	K33 (86) cutoff solenoid relay	K32 4 pole plug timer cutoff solenoid	RD/WH	1
49	X1 (5) 18 pole plug (F10, 5 A)	K32 4 pole plug timer cutoff solenoid	RD	1.5
50	K33 (85) cutoff solenoid relay	K32 4 pole plug timer cutoff solenoid	YE	1
51	K17 starting relay	M1 starter	RD/BK	6
52	K33 (87) cutoff solenoid relay	Y1 cutoff solenoid	RD/BK	2.5
53	K16 (87) high current relay preheating	R1 preheating facility	BU	4
54	M1 starter	G1 alternator	RD	10
55	Y4 (2) 1st/2nd speed solenoid valve	Earth connection	BK	1
56	B1 fuel level sensor	Earth connection	BK	1
57	B2 horn	Headlight, left (6) 6 pole plug	BK	1
58	B2 horn	Earth connection	BK	1.5
59	Y7 (2) solenoid valve 3rd control circuit electric	Earth connection	BK	1
60	Y8 (2) solenoid valve 3rd control circuit electric	Earth connection	BK	1
61	Y5 (2) solenoid valve 4rd control circuit electric	Earth connection	BK	1
62	Y6 (2) solenoid valve 4th control circuit electric	Earth connection	BK	1
63	X11 front socket (31)	Earth connection	BK	1.5
64	Headlight, right (1) 6 pole plug	Earth connection	BK	1.5
65	K32 4 pole plug timer cutoff solenoid	K16 (85) high current relay preheating	BK	1
66	K16 (85) high current relay preheating	Earth connection	BK	1
67	Y3 (2) solenoid valve forwards	Earth connection	BK	1
68	Y2 (2) solenoid valve reverse	Earth connection	BK	1
69	X12 rear socket (31)	Earth connection	BK	1.5
70	B3 backup warning system	Earth connection	BK	1
71	E2/H16 rear light/turn indicator (right)	Earth connection	BK	1
72	E4/H14 rear light/turn indicator (left)	Earth connection	BK	1
73	Y1 cutoff solenoid	Earth connection	BK	2.5
74	S18 hydraulic oil pressure switch	Earth connection	BK	1
75	S20 hydraulic oil temperature switch	Earth connection	BK	1
76	X3 (1) 22 pole plug (F15, 7.5 A)	Alternator G1 (IG) (terminal 2)	RD/BK	1
77	X3 (1) 22 pole plug (F15, 7.5 A)	Connecting point	RD/BK	1
78	X1 (15) 18 pole plug (D+)	1 pole plug	BU	1
79	X3 (2) 22 pole plug	2 pole plug numberplate light	GY/RD	1
80	Earth connection	2 pole plug numberplate light	BK	1
81	Alternator G1 (P) (PIN 3)	K17 starting relay	YE	1
82	Alternator G1 1 pole plug and socket connection	K17 starting relay	RD/BK	1
83	Connecting point	1 pole plug	RD/BK	1
84	Connecting point	S12 brake light switch	RD/BK	1
85	S12 brake light switch	H19 (1) 2 pole plug brake light left	RD	1
86	S12 brake light switch	H20 (1) 2 pole plug brake light right	RD	1
87	H20 (2) 2 pole plug brake light right	Earth	BK	1
88	H19 (2) 2 pole plug brake light left	Earth	BK	1
89	Y1 cutoff solenoid terminal 15	2 pole plug fuel pump	BK/WH	1
90	Y1 cutoff solenoid terminal 31	2 pole plug fuel pump – earth	BK	1

Legend: Wiring harness 1000110533

10.19.3 Wiring harness 1000110533 model 340-01 (engine – frame TNV 88)

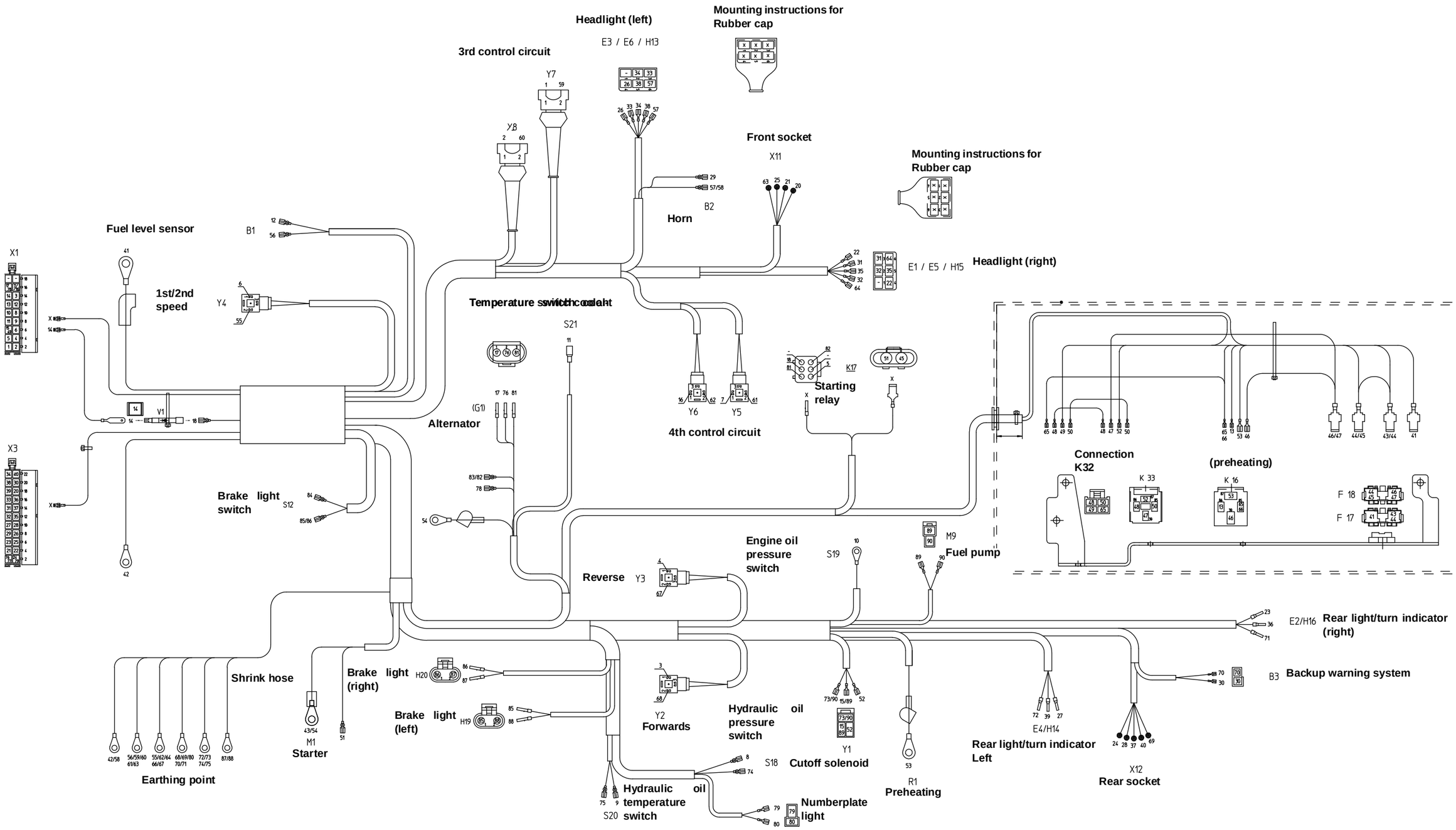

Wiring harness 1000110533 model 340-01

10.19.4 Legend: Wiring harness 1000110534 model 341-01/341-02 (engine – frame TNV 88)

No.	From	To	Colour	mm²
1	X1 (1) 18 pole plug (K14 (87))	Y7 (1) solenoid valve 3rd control circuit electric (lock)	BN/YE	1
2	X1 (2) 18 pole plug (K13 (87))	Y8 (1) solenoid valve 3rd control circuit electric (unlock)	BN/BK	1
3	X1 (14) 18 pole plug (K4 (87))	Y2 (1) solenoid valve forwards	GN/VT	1
4	X1 (4) 18 pole plug (K3 (87))	Y3 (1) solenoid valve reverse	WH/VT	1
5	X1 (3) 18 pole plug (S1 (50a) preheating start switch)	K17 starting relay	BU/BK	1
6	X1 (6) 18 pole plug (X9 steering-column control lever)	Y4 (1) 1st/2nd speed solenoid valve	GY/GN	1
7	X1 (16) 18 pole plug (S11 switch 4th control circuit	Y5 (1) solenoid valve 4th control circuit	Pink	1
8	X1 (10) 18 pole plug (H8 hydraulic oil pressure tell-tale)	S18 hydraulic oil pressure switch	BU/YE	1
9	X1 (8) 18 pole plug (H7 hydraulic oil temperature tell-tale)	S20 hydraulic oil temperature switch	BU/RD	1
10	X1 (9) 18 pole plug (H6 engine oil pressure telltale)	S19 engine oil pressure switch	BU/GN	1
11	X1 (7) 18 pole plug (H6 coolant temperature telltale)	S21 temperature switch coolant	BU/WH	1
12	X1 (12) 18 pole plug (P2 fuel level indication)	B1 fuel level sensor	VT/BU	1
13	X1 (11) 18 pole plug (S1 (19) preheating)	K16 (86) high current relay preheating	BU/GY	1
14	X1 (13) 18 pole plug (S16 (1) handbrake switch)	V1 blocking diode	BK	1
15	X1 (5) 18 pole plug (F10, 5 A)	Y1 cutoff solenoid	BK/WH	1
16	X1 (16) 18 pole plug (S11 switch 4th control circuit)	Y6 (1) solenoid valve 4th control circuit electric	Pink	1
17	X1 (15) 18 pole plug (H1 alternator charge telltale)	Alternator G1 (D+) (1) 3 pole plug and socket connection	BU	1
18	X1 (18) 18 pole plug (load stabiliser switch)	Y12 (1) hose burst valve solenoid valve	RD/GN	1
19	X1 (14) 18 pole plug	Y13 (1) driving direction identification solenoid valve	GN/VT	1
20	X1 (17) 18 pole plug (load stabiliser switch)	Y10 (1) solenoid valve load stabiliser	WH/RD	1
21	X1 (17) 18 pole plug (load stabiliser switch)	Y11 (1) solenoid valve load stabiliser	WH/RD	1
22	X3 (18) 22 pole plug (K5, (87))	X11 front socket (54)	RD/YE	1.5
23	X3 (3) 22 pole plug (F4 5 A)	X11 front socket (58R) clearance light	GY/RD	1
24	X3 (4) 22 pole plug (F4 5 A)	E1 (4) 6 pole plug, front right parking light	GY/RD	1
25	X3 (5) 22 pole plug (F4 5 A)	E2 rear right light	GY/RD	1
26	X3 (2) 22 pole plug (F4 5 A)	X12 rear socket (5/58 R) rear light	GY/RD	1
27	X3 (6) 22 pole plug (F3 5 A)	X11 front socket (58L) clearance light	GY/BK	1
28	X3 (8) 22 pole plug (F3 5 A)	E3 (4) 6 pole plug, front left parking light	GY/BK	1
29	X3 (9) 22 pole plug (F3 5 A)	E4 rear left light	GY/BK	1
30	X3 (10) 22 pole plug (F3 5 A)	X12 rear socket (7/58 L) rear light	GY/BK	1
31	X3 (7) 22 pole plug (X10.2 steering-column control lever)	B2 horn	BN/YE	1.5
32	X3 (20) 22 pole plug (K3, (87))	B3 backup warning system	WH/VT	1
33	X3 (13) 22 pole plug (F2, 7.5 A)	E5 (56a) 6 pole plug (3) high beam (right)	WH	1.5
34	X3 (11) 22 pole plug (F9, 7.5 A)	E5 (56b) 6 pole plug (2) low beam (right)	YE	1.5
35	X3 (15) 22 pole plug (F1, 7.5 A)	E6 (56a) 6 pole plug (3) high beam (left)	WH/BK	1.5

No.	From	To	Colour	mm²
36	X3 (21) 22 pole plug (F8, 7.5 A)	E6 (56b) 6 pole plug (2) low beam (left)	YE/BK	1.5
37	X3 (12) 22 pole plug (X10.1 (7) steering-column control lever)	H15 6 pole plug (5) turn indicator (right)	BK/WH	1
38	X3 (16) 22 pole plug (X10.1 (7) steering-column control lever)	H16 turn indicator (rear right)	BK/WH	1
39	X3 (14) 22 pole plug (X10.1 (7) steering-column control lever)	X12 rear socket (4/R) turn indicator	BK/WH	1
40	X3 (19) 22 pole plug (X10.1 (6) steering-column control lever)	H13 6 pole plug (5) turn indicator (front left)	BK/GN	1
41	X3 (17) 22 pole plug (X10.1 (6) steering-column control lever)	H14 turn indicator (rear left)	BK/GN	1
42	X3 (22) 22 pole plug (X10.1 (6) steering-column control lever)	X12 rear socket (1/L) turn indicator	BK/GN	1
43	X3 (1) 22 pole plug (F15, 7.5 A)	Alternator G1 (2) 3 pole plug and socket connection	RD/BK	1
44	Power supply board	F17 (80 A) main fuse	RD	10
45	Earthing point board	Earth connection	BK	4
46	F17 (80 A) main fuse	M1 starter	RD	10
47	F18 (40 A) preheating fuse	F17 (80 A) main fuse	RD	6
48	F18 (40 A) preheating fuse	K17 starting relay	RD	6
49	F18 (40 A) preheating fuse	K16 (30) high current relay preheating	RD	4
50	F18 (40 A) preheating fuse	K33 (30) cutoff solenoid relay	RD	4
51	K33 (86) cutoff solenoid relay	K32 4 pole plug timer cutoff solenoid	RD/WH	1
52	X1 (5) 18 pole plug (F10, 5 A)	K32 4 pole plug timer cutoff solenoid	RD	1.5
53	K33 (85) cutoff solenoid relay	K32 4 pole plug timer cutoff solenoid	YE	1
54	K17 starting relay	M1 starter	RD/BK	6
55	K33 (87) cutoff solenoid relay	Y1 cutoff solenoid	RD/BK	2.5
56	K16 (87) high current relay preheating	R1 preheating facility	BU	4
57	M1 starter	G1 alternator	RD	10
58	Y4 (2) 1st/2nd speed solenoid valve	Earth connection	BK	1
59	B1 fuel level sensor	Earth connection	BK	1
60	B2 horn	Headlight, left, 6 pole plug (1)	BK	1
61	B2 horn	Earth connection	BK	1.5
62	Y7 (2) solenoid valve 3rd control circuit electric	Earth connection	BK	1
63	Y8 (2) solenoid valve 3rd control circuit electric	Earth connection	BK	1
64	Y5 (2) solenoid valve 4rd control circuit electric	Earth connection	BK	1
65	Y6 (2) solenoid valve 4th control circuit electric	Earth connection	BK	1
66	X11 front socket (31)	Earth connection	BK	1.5
67	Headlight, right, 6 pole plug (1)	Earth connection	BK	1.5
68	K32 4 pole plug timer cutoff solenoid	K16 (85) high current relay preheating	BK	1
69	K16 (85) high current relay preheating	Earth connection	BK	1
70	Y3 (2) solenoid valve forwards	Earth connection	BK	1

No.	From	To	Colour	mm²
71	Y2 (2) solenoid valve reverse	Earth connection	BK	1
72	X12 rear socket (31)	Earth connection	BK	1.5
73	B3 backup warning system	Earth connection	BK	1
74	E2/H16 rear light/turn indicator (right)	Earth connection	BK	1
75	E4/H14 rear light/turn indicator (left)	Earth connection	BK	1
76	Y1 cutoff solenoid	Earth connection	BK	2.5
77	S18 hydraulic oil pressure switch	Earth connection	BK	1
78	S20 hydraulic oil temperature switch	Earth connection	BK	1
79	Y10 (2) load stabiliser solenoid valve	Earth connection	BK	1
80	Y11 (2) solenoid valve load stabiliser	Earth connection	BK	1
81	Y12 (2) hose burst valve solenoid valve	Earth connection	BK	1
82	Y13 (2) driving direction identification solenoid valve	Earth connection	BK	1
83	---	---	--	---
84	---	---	--	---
85	X3 (1) 22 pole plug	Connecting point	RD/BK	1
86	X1 (15) 18 pole plug (D+)	1 pole plug	BU	1
87	X3 (2) 22 pole plug	2 pole plug numberplate light	GY/RD	1
88	Earthing point I	2 pole plug numberplate light	BK	1
89	V1 blocking diode	K17 6 pole starting relay	BK	1
90	Alternator G1 3 pole plug and socket connection (3)	K17 6 pole starting relay	YE	1
91	Alternator G1 1 pole plug and socket connection	K17 6 pole starting relay	RD/BK	1
92	Connecting point	1 pole plug	RD/BK	1
93	Connecting point	S12 brake light switch	RD/BK	1
94	S12 brake light switch	H19 (1) 2 pole plug brake light left	RD	1
95	S12 brake light switch	H20 (1) 2 pole plug brake light right	RD	1
96	H19 (2) 2 pole plug brake light left	Earthing point II	BK	1
97	H20 (2) 2 pole plug brake light right	Earthing point II	BK	1
98	Y1 cutoff solenoid	2 pole plug fuel pump	BK/WH	1
99	Y1 cutoff solenoid	2 pole plug fuel pump – earth	BK	1
100	Soldering point	2 pole plug (1) (forwards)	GN/VT	1
101	X1 (4) 18 pole plug driving direction	2 pole plug (2) (reverse)	WH/VT	1

Legend: Wiring harness 1000110534 model 341-01/341-02

10.19.5 Wiring harness 1000110534 model 341-01/341-02 (engine – frame TNV 88)

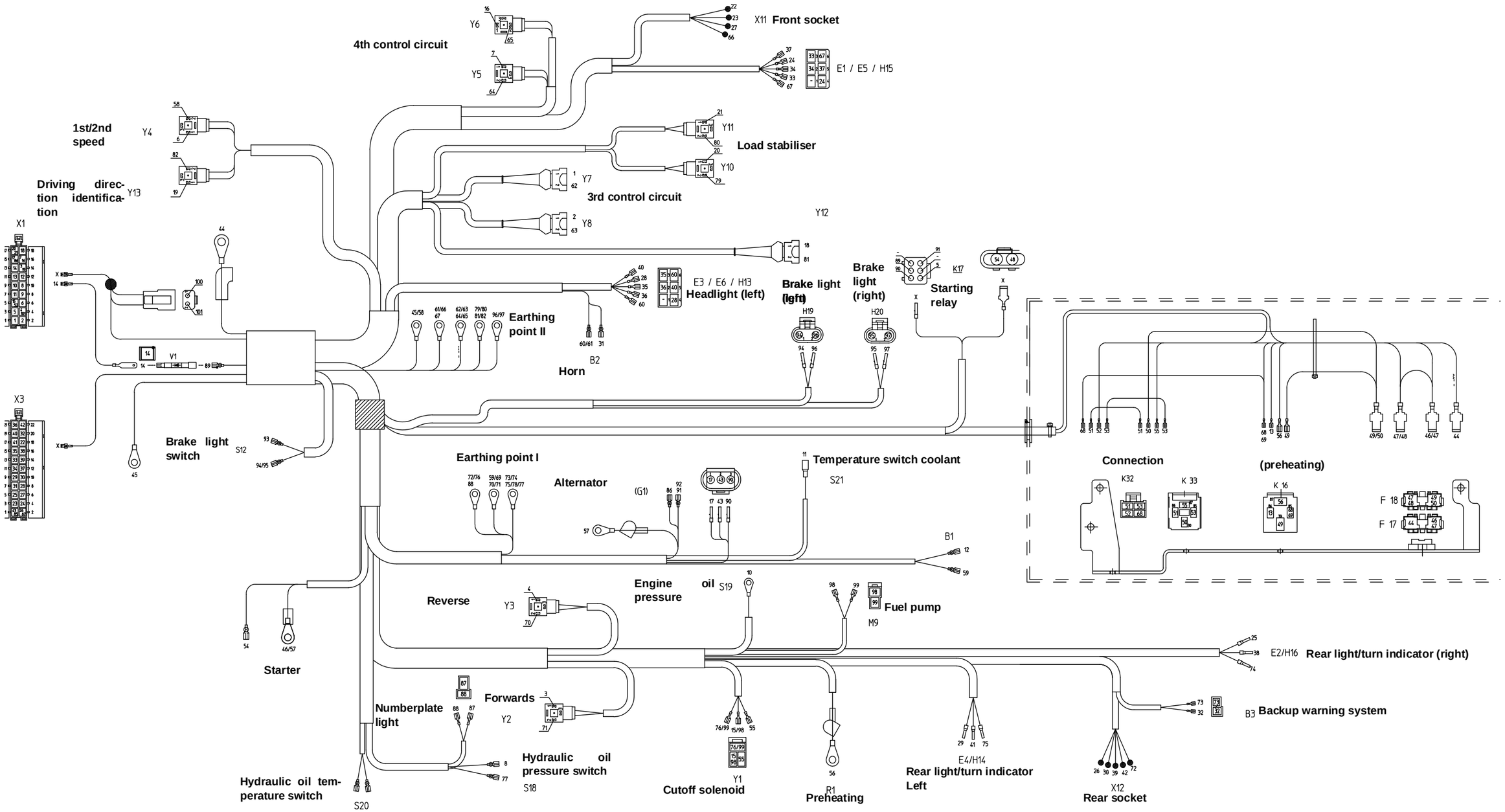

Wiring harness 1000110534 model 341-01/341-02

10.19.6 Legend: Wiring harness 0113300310 for model 341-01 (engine – frame TNE 88)

No.	From	To	Colour	mm²
11	X1 (1) 18 pole plug (K14 (87))	Y7 (1) solenoid valve 3rd control circuit electric (lock)	BN/YE	1.0
12	X1 (2) 18 pole plug (K13 (87))	Y8 (1) solenoid valve 3rd control circuit electric (unlock)	BN/BK	1.0
13	X1 (14) 18 pole plug (K4 (87))	Y2 (1) solenoid valve forwards	GN/VT	1.0
14	X1 (4) 18 pole plug (K3 (87))	Y3 (1) solenoid valve reverse	WH/VT	1.0
15	X1 (3) 18 pole plug (S1 (50a) preheating start switch)	K17 (86) high current relay start	BU/BK	1.0
16	X1 (6) 18 pole plug (X9 steering-column control lever)	Y4 (1) 1st/2nd speed solenoid valve	GY/GN	1.0
17	X1 (16) 18 pole plug (S11 switch 4th control circuit	Y5 (1) solenoid valve 4th control circuit	Pink	1.0
18	X1 (10) 18 pole plug (H8 hydraulic oil pressure telltale)	S18 hydraulic oil pressure switch	BU/YE	1.0
19	X1 (8) 18 pole plug (H7 hydraulic oil temperature telltale)	S20 hydraulic oil temperature switch	BU/RD	1.0
20	X1 (9) 18 pole plug (H6 engine oil pressure telltale)	S19 engine oil pressure switch	BU/GN	1.0
21	X1 (7) 18 pole plug (H6 coolant temperature telltale)	S21 temperature switch coolant	BU/WH	1.0
22	X1 (12) 18 pole plug (P2 fuel level indication)	B1 fuel level sensor	VT/BU	1.0
23	X1 (11) 18 pole plug (S1 (19) preheating)	K16 (86) high current relay preheating	BU/GY	1.0
24	X1 (13) 18 pole plug (S16 (1) handbrake switch)	K17 (85) high current relay start	BK	1.0
25	X1 (5) 18 pole plug (F10, 5 A)	Y1 cutoff solenoid	BK/WH	1.0
26	X1 (16) 18 pole plug (S11 switch 4th control circuit)	Y6 (1) solenoid valve 4th control circuit electric	Pink	1.0
27	X1 (15) 18 pole plug (H1 alternator charge telltale)	Alternator G1 (D+)	BU	1.0
28	X1 (18) 18 pole plug (load stabiliser switch)	Y12 (1) hose burst valve solenoid valve	RD/GN	1.0
29	1 pole plug (switch driving direction identification)	Y13 (1) driving direction identification solenoid valve	GN/VT	1.0
30	X1 (17) 18 pole plug (load stabiliser switch)	Y10 (1) solenoid valve load stabiliser	WH/RD	1.0
31	X1 (17) 18 pole plug (load stabiliser switch)	Y11 (1) solenoid valve load stabiliser	WH/RD	1.0
32	X3 (18) 22 pole plug (K5, (87))	X11 front socket (54)	RD/YE	1.5
33	X3 (3) 22 pole plug (F4 5 A)	X11 front socket (58R) clearance light	GY/RD	1.0
34	X3 (4) 22 pole plug (F4 5 A)	E1 (4) 6 pole plug, front right parking light	GY/RD	1.0
35	X3 (5) 22 pole plug (F4 5 A)	E2 rear right light	GY/RD	1.0
36	X3 (2) 22 pole plug (F4 5 A)	X12 rear socket (5/58 R) rear light	GY/RD	1.0
37	X3 (6) 22 pole plug (F3 5 A)	X11 front socket (58L) clearance light	GY/BK	1.0
38	X3 (8) 22 pole plug (F3 5 A)	E3 (4) 6 pole plug, front left parking light	GY/BK	1.0
39	X3 (9) 22 pole plug (F3 5 A)	E4 rear left light	GY/BK	1.0
40	X3 (10) 22 pole plug (F3 5 A)	X12 rear socket (7/58 L) rear light	GY/BK	1.0
41	X3 (7) 22 pole plug (X10.2 steering-column control lever)	B2 horn	BN/YE	1.5
42	X3 (20) 22 pole plug (K3, (87))	B3 backup warning system	WH/VT	1.0
43	X3 (13) 22 pole plug (F2, 7.5 A)	E5 (56a) 6 pole plug (3) high beam (right)	WH	1.5
44	X3 (11) 22 pole plug (F9, 7.5 A)	E5 (56b) 6 pole plug (2) low beam (right)	YE	1.5
45	X3 (15) 22 pole plug (F1, 7.5 A)	E6 (56a) 6 pole plug (3) high beam (left)	WH/BK	1.5
46	X3 (21) 22 pole plug (F8, 7.5 A)	E6 (56b) 6 pole plug (2) low beam (left)	YE/BK	1.5
47	X3 (12) 22 pole plug (X10.1 (7) steering-column control lever)	H15 6 pole plug (5) turn indicator (right)	BK/WH	1.0
48	X3 (16) 22 pole plug (X10.1 (7) steering-column control lever)	H16 turn indicator (rear right)	BK/WH	1.0
49	X3 (14) 22 pole plug (X10.1 (7) steering-column control lever)	X12 rear socket (4/R) turn indicator	BK/WH	1.0
50	X3 (19) 22 pole plug (X10.1 (6) steering-column control lever)	H13 6 pole plug (5) turn indicator (front left)	BK/GN	1.0
51	X3 (17) 22 pole plug (X10.1 (6) steering-column control lever)	H14 turn indicator (rear left)	BK/GN	1.0
52	X3 (22) 22 pole plug (X10.1 (6) steering-column control lever)	X12 rear socket (1/L) turn indicator	BK/GN	1.0
53	X3 (1) 22 pole plug (F15, 7.5 A)	Alternator G1 (IG) (terminal 15)	RD/BK	1.0
54	Power supply board	F17 (80 A) main fuse	RD	10.0
55	Earth, board	Earth	BK	4.0
56	F17 (80 A) main fuse	M1 starter	RD	10.0
57	F18 (40 A) preheating fuse	F17 (80 A) main fuse	RD	6.0
58	F18 (40 A) preheating fuse	K17 (30) high current relay start	RD	6.0
59	F18 (40 A) preheating fuse	K16 (30) high current relay preheating	RD	4.0
60	F18 (40 A) preheating fuse	K33 (30) cutoff solenoid relay	RD	4.0
61	K33 (86) cutoff solenoid relay	K32 4 pole plug timer cutoff solenoid	RD/WH	1.0
62	K17 (87) high current relay start	K32 4 pole plug timer cutoff solenoid	RD	1.5
63	K33 (85) cutoff solenoid relay	K32 4 pole plug timer cutoff solenoid	YE	1.0
64	K17 (87) high current relay start	M1 starter	RD/BK	6.0
65	K33 (87) cutoff solenoid relay	Y1 cutoff solenoid	RD/BK	2.5
66	K16 (87) high current relay preheating	R1 preheating facility	BU	4.0
67	M1 starter	G1 alternator	RD	10.0
68	Y4 (2) 1st/2nd speed solenoid valve	Earth	BK	1.0
69	B1 fuel level sensor	Earth	BK	1.0
70	B2 horn	Headlight, left, 6 pole plug (1)	BK	1.0
71	B2 horn	Earth	BK	1.5
72	Y7 (2) solenoid valve 3rd control circuit electric	Earth	BK	1.0
73	Y8 (2) solenoid valve 3rd control circuit electric	Earth	BK	1.0
74	Y5 (2) solenoid valve 4rd control circuit electric	Earth	BK	1.0
75	Y6 (2) solenoid valve 4th control circuit electric	Earth	BK	1.0
76	X11 front socket (31)	Earth	BK	1.5
77	Headlight, right, 6 pole plug (1)	Earth	BK	1.5
78	K32 4 pole plug timer cutoff solenoid	K16 (85) high current relay preheating	BK	1.0
79	K16 (85) high current relay preheating	Earth	BK	1.0
80	Y3 (2) solenoid valve forwards	Earth	BK	1.0
81	Y2 (2) solenoid valve reverse	Earth	BK	1.0
82	X12 rear socket (31)	Earth	BK	1.5
83	B3 backup warning system	Earth	BK	1.0
84	E2/H16 rear light/turn indicator (right)	Earth	BK	1.0
85	E4/H14 rear light/turn indicator (left)	Earth	BK	1.0
86	Y1 cutoff solenoid	Earth	BK	2.5
87	S18 hydraulic oil pressure switch	Earth	BK	1.0
88	S20 hydraulic oil temperature switch	Earth	BK	1.0
89	Y10 (2) load stabiliser solenoid valve	Earth	BK	1.0
90	Y11 (2) solenoid valve load stabiliser	Earth	BK	1.0
91	Y12 (2) hose burst valve solenoid valve	Earth	BK	1.0
92	Y13 (2) driving direction identification solenoid valve	Earth	BK	1.0
93	---	---	--	---
94	---	---	--	---
95	Alternator G1 2 pole plug (terminal 15)	1 pole plug	RD/BK	1.0
96	Alternator G1 2 pole plug (D+)	1 pole plug	BU	1.0

Legend: Wiring harness 0113300310 for model 341-01

10.19.7 Wiring harness 0113300310 for model 341-01 (engine – frame TNE 88)

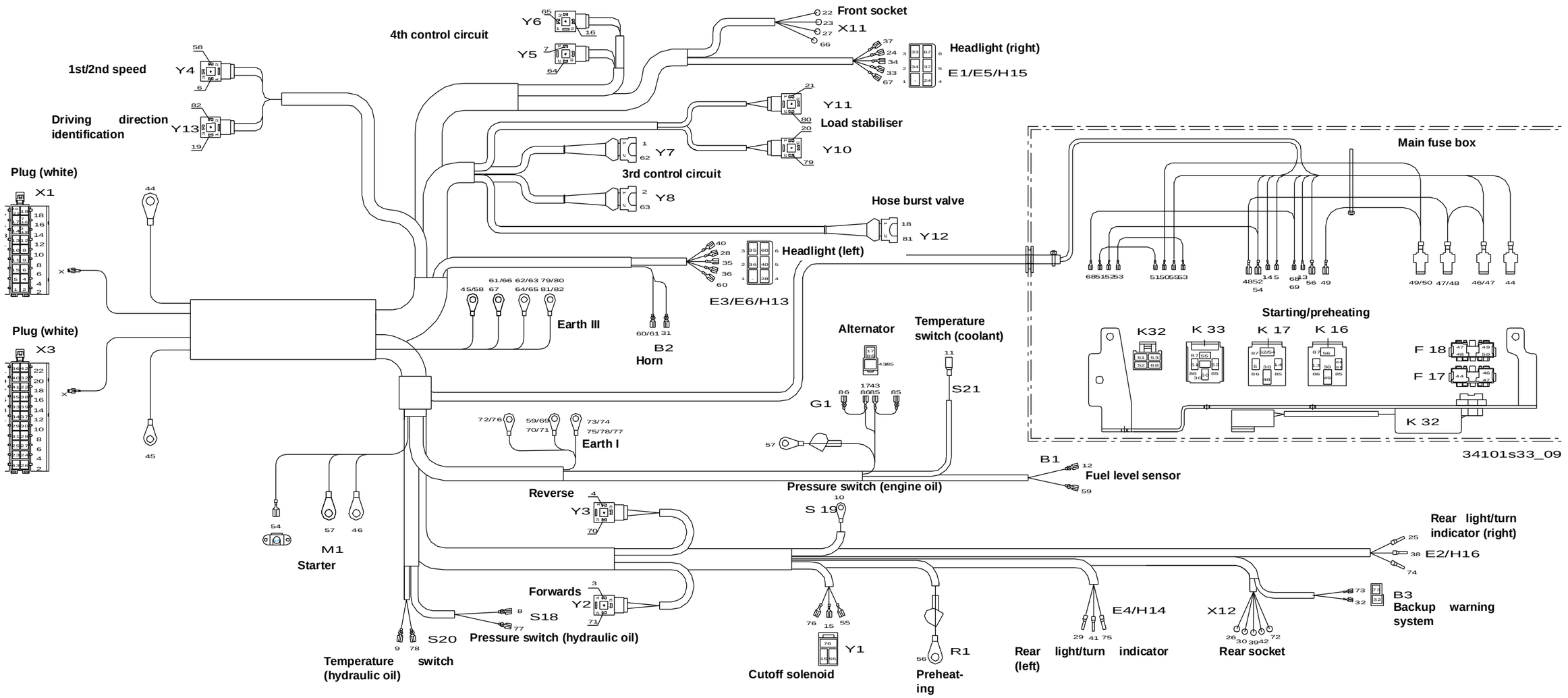

Wiring harness 0113300310 for model 341-01

10.19.8 Legend: Wiring harness 1000127392 (cab 341-02)

No.	From	To	Colour	mm²
1	X2 (4) 14 pole plug (1st/2nd speed range)	S22 (7) (switch 1st/2nd speed)	GY/GN	1
2	X2 (9) 14 pole plug (K14, terminal 86)	X8 (6) 8 pole plug (control lever)	BN/YE	1
3	X2 (11) 14 pole plug (K13, terminal 86)	X8 (7) 8 pole plug (control lever)	BN/BK	1
4	X2 (6) 14 pole plug (earth K4/K3)	S16 (3) 3 pole plug handbrake switch	BN	1
5	X2 (2) 14 pole plug (K3, (86))	X8 (1) 8 pole plug (control lever reverse)	WH/VT	1
6	X2 (12) 14 pole plug (K4, (86))	X8 (2) 8 pole plug (control lever forwards)	GN/VT	1
7	----------	----------	-----	---
8	X2 (8) 14 pole plug (F12, 15 A)	X15 (1) 2 pole plug float position solenoid	WH/BU	1
9	X2 (5) 14 pole plug (K6 (+) turn indicator relay)	S15 (4) 7 pole plug hazard warning switch (49)	BK/ WH/RD	1
10	X2 (3) 14 pole plug (K6 (C) turn indicator relay)	S15 (5) 7 pole plug hazard warning switch (49a)	BK/ WH/GN	1
11	X2 (1) 14 pole plug (K6 (C) turn indicator relay)	X10.1 (5) 8 pole plug (steering-column control lever, right)	WH/RD	1
12	X2 (10) 14 pole plug (K17 (85) starting relay))	S16 (1) 3 pole plug handbrake switch	BN/VT	1
13	X2 (7) 14 pole plug (K6 (R) turn indicator relay))	15 pole plug (12) H10 (turn indicator machine)	WH/GN	1
14	X2 (14) 14 pole plug (F15, 7.5 A)	S15 (1) 7 pole plug hazard warning switch (15)	RD/BK	1.5
15	X4 (2) 18 pole plug (K1 (86)	S1 (5), terminal 15 (preheating start switch)	RD/BK	1
16	X4 (9) 18 pole plug (K16, (86) preheating relay)	S1 (8), terminal 19 (preheating start switch)	BU/GY	1
17	X4 (16) 18 pole plug (K17, (86) starting relay	S1 (7), terminal 50a (preheating start switch)	BU/BK	1
18	X4 (6) 18 pole plug (F5, 10 A)	S1 (2), terminal 30 (preheating start switch)	RD	2.5
19	----------	----------	-----	---
20	X4 (7) 18 pole plug (F4, 5 A)	15 pole plug (2) lights	GY/RD	1
21	X4 (4) 18 pole plug (F3, 5 A)	E11 lighting cigarette lighter	GY/BK	1
22	----------	----------	-----	---
23	X4 (18) 18 pole plug (K6, (R2))	15 pole plug (11) H9 rear attachment turn indicator telltale	BK/BU	1
24	X4 (5) 18 pole plug (G1, (D+))	15 pole plug (8) H1/P1 charge function telltale	BU	1
25	X4 (12) 18 pole plug (B1 fuel level sensor)	15 pole plug (4) P2 fuel level indication	VT/BU	1
26	X4 (1) 18 pole plug (E6 (56a) high beam (left)	15 pole plug (15) H2 high beam telltale	WH	1
27	X4 (10) 18 pole plug (K17, (85))	15 pole plug (9) H3 handbrake telltale	BN/WH	1
28	----------	----------	-----	---
29	X4 (15) 18 pole plug (S21 coolant pressure switch)	15 pole plug (14) H5 coolant telltale	BU/WH	1
30	X4 (14) 18 pole plug (S19 engine oil pressure switch)	15 pole plug (10) H6 engine oil pressure telltale	BU/GN	1
31	X4 (17) 18 pole plug (S20 hydraulic oil temperature)	15 pole plug (7) H7 hydraulic oil temperature telltale	BU/RD	1
32	X4 (13) 18 pole plug (S18 hydraulic oil pressure switch)	15 pole plug (6) H8 hydraulic oil pressure telltale	BU/YE	1
33	X5 (3) 22 pole plug (turn indicator, right)	X10.1 (7) 8 pole plug (steering-column control lever, right)	BK/GN	1
34	X5 (2) 22 pole plug (turn indicator, left)	X10.1 (6) 8 pole plug (steering-column control lever, right)	BK/WH	1
35	X5 (6) 22 pole plug (F8/F9 (7.5 A))	X10.2 (3) 8 pole plug (steering-column control lever, right)	YE	1.5
36	X5 (8) 22 pole plug (F1/F2 (7.5 A))	X10.2 (6) 6 pole plug (steering-column control lever, right)	WH	1.5
37	X5 (11) 22 pole plug (B2 horn)	X10.2 (1) 6 pole plug (steering-column control lever, right)	BN/YE	1.5
38	X5 (10) 22 pole plug (F10, 5 A)	15 pole plug (1) power supply	RD/BK	1
39	X5 (12) 22 pole plug (F10, 5 A)	X8 (8) 8 pole plug (control lever 3rd control circuit)	OG	1
40	X5 (16) 22 pole plug (F13, 7.5 A)	X8 (5) 8 pole plug (control lever neutral)	RD	1
41	X5 (16) 22 pole plug (F13, 7.5 A)	X8 (3) 8 pole plug (control lever drive)	RD	1
42	X5 (14) 22 pole plug (F11, 15 A)	X10.1 (1) 8 pole plug (steering-column control lever, right)	GY/GN	1.5
43	X5 (7) 22 pole plug (S5 (1) heating switch)	M4 (1) 3 pole plug heating fan/2nd speed	RD/WH	1.5
44	X5 (5) 22 pole plug (S5 (5) heating switch)	M4 (2) 3 pole plug heating fan/1st speed	RD/YE	1.5
45	X5 (1) 22 pole plug (M5 washer pump)	X10.2 (4) 6 pole plug (steering-column control lever, right)	GN/BK	1
46	X5 (13) 22 pole plug (S4 light switch)	X10.2 (5) 6 pole plug (steering-column control lever, right)	WH/BK	1
47	X5 (19) 22 pole plug (F7, 25 A)	X10.2 (2) 6 pole plug (steering-column control lever, right)	WH	1.5
48	X5 (20) 22 pole plug (F6, 25 A)	E11 cigarette lighter	RD/BK	1.5
49	X5 (17) 22 pole plug (F5, 10 A)	S15 (3) 7 pole plug hazard warning switch (30)	RD/YE	1.5
50	X5 (15) 22 pole plug (front wiper)	X10.1 (3) 8 pole plug (steering-column control lever, right)	GN/WH	1
51	X5 (4) 22 pole plug (M2, (53a))	X10.1 (4) 8 pole plug (steering-column control lever, right)	GN/BK	1
52	X5 (10) 22 pole plug (F10, 5 A)	S22 (5) switch 1st/2nd speed	RD/BK	1
53	----------	----------	-----	---
54	S16 (2) 3 pole plug (handbrake switch)	Earthing point board	BK	1
55	X8 (4) 8 pole plug (control lever drive)	Earthing point board	BK	1
56	X15 (2) 2 pole plug (float position solenoid)	Earthing point board	BK	1
57	M4 (3) 3 pole plug (heating fan)	Earthing point board	BK	1.5
58	Cigarette lighter	Earthing point board	BK	1.5
59	15 pole plug (5) indicator	Earthing point board	BK	1
60	S22 (9) switch 1st/2nd speed	Earthing point board	BK	1
61	S15 (7) 7 pole plug hazard warning switch (R)	X10.1 (7) 8 pole plug (steering-column control lever, right)	BK/WH	1
62	S15 (6) 7 pole plug hazard warning switch (L)	X10.1 (6) 8 pole plug (steering-column control lever, right)	BK/GN	1
63	X5 (9) 22 pole plug (front/rear wiper)	X10.1 (2) 8 pole plug (steering-column control lever, right)	BU/GN	1
64	X2 (13) 14 pole plug (load stabiliser/hose burst valve)	15 pole plug (3), (load stabiliser/hose burst valve telltale)	RD/YE	1
65	X4 (8) 18 pole plug (S14 3rd control circuit)	15 pole plug (13) 3rd control circuit telltale	VT	1
66	----------	----------	-----	---
67	----------	----------	-----	---
68	X5 (21) 22 pole plug (F14, 30 A)	X18 1 pole plug and socket connection	RD	1.5
69	2 pole plug (1) (forwards)	H21 telltale forwards	GN/VT	1
70	2 pole plug (2) (reverse)	H22 telltale reverse	WH/VT	1
71	H22 telltale reverse	H21 telltale forwards	BK	1
72	H21 telltale forwards	Earth connection	BK	1
73	S22 (7) switch 1st/2nd speed	S22 (B) switch 1st/2nd speed	GY/GN	1
74	S22 (1) switch 1st/2nd speed	S22 (10) switch 1st/2nd speed	GY	

Legend: Wiring harness 1000127392

10.19.9 Wiring harness 1000127392 cab 341-02

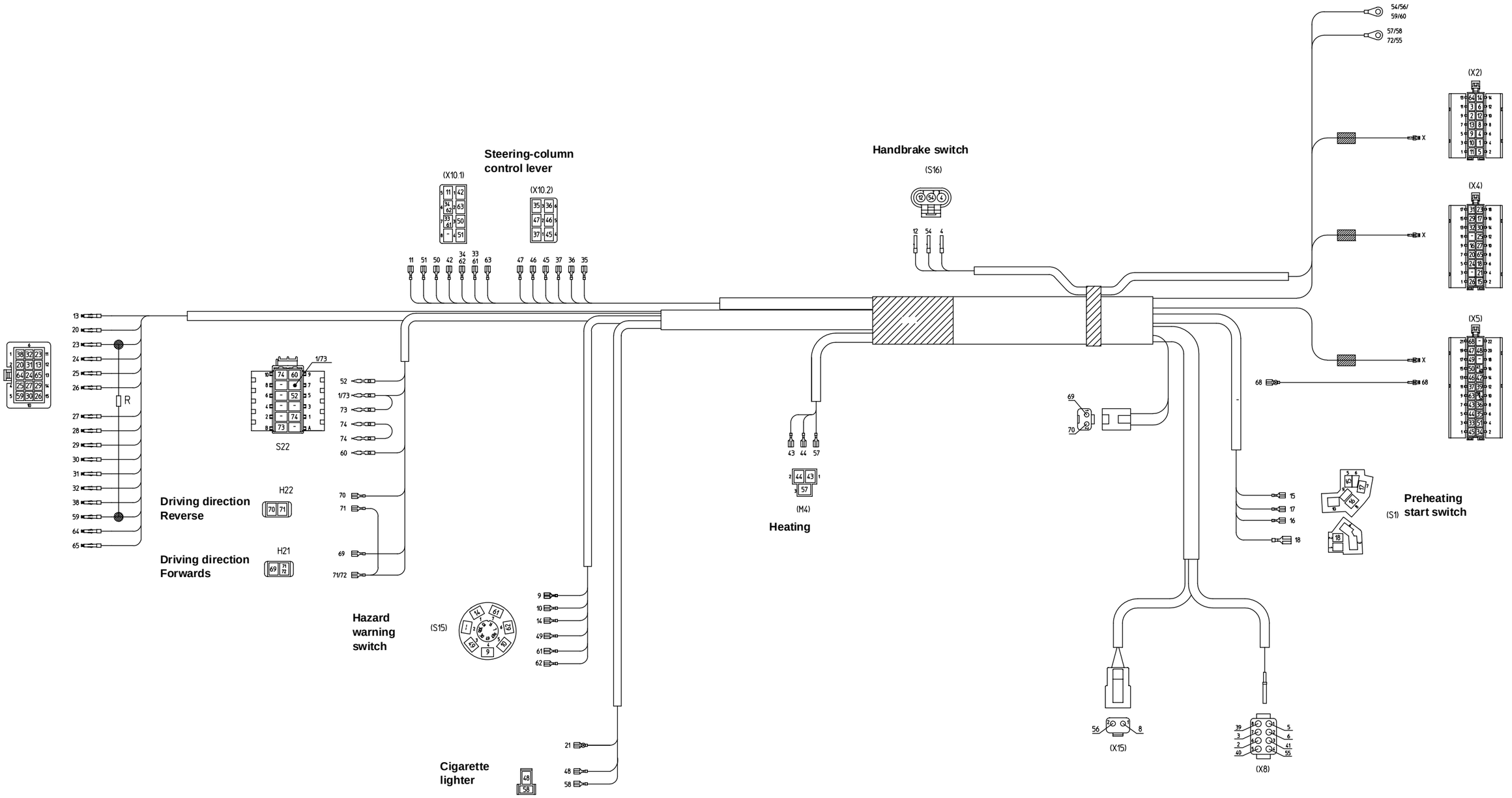

10.19.10 Wiring harness 0113300010 engine – frame model 340-01 (engine TNE 80)

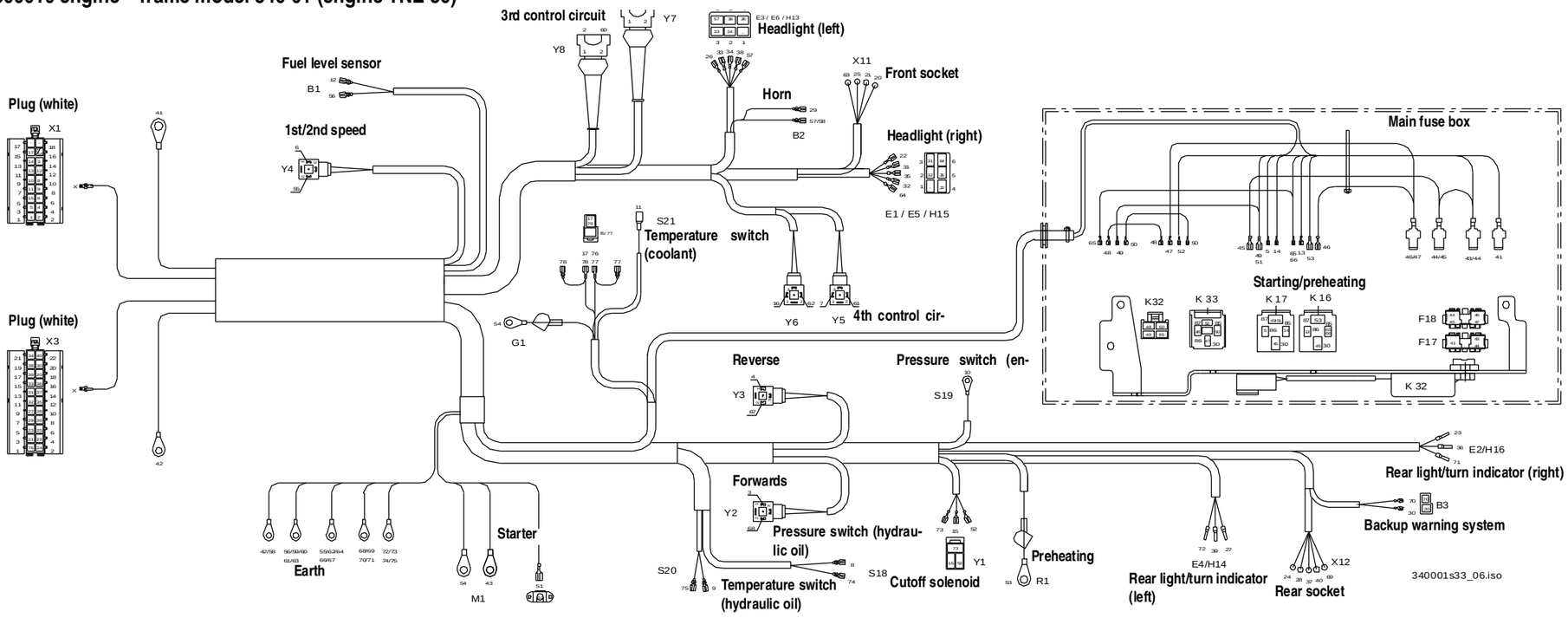

No.	From	To	Colour	mm²
1	X1 (1) 18 pole plug (K14 (87))	Y7 (1) solenoid valve 3rd control circuit electric	BN/YE	1.0
2	X1 (2) 18 pole plug (K13 (87))	Y8 (1) solenoid valve 3rd control circuit electric	BN/BK	1.0
3	X1 (14) 18 pole plug (K4 (87))	Y2 solenoid valve forwards	GN/VT	1.0
4	X1 (4) 18 pole plug (K3 (87))	Y3 reverse driving solenoid valve	WH/VT	1.0
5	X1 (3) 18 pole plug (S1 (50a) preheating start switch)	K17 (86) high current relay start	BU/BK	1.0
6	X1 (6) 18 pole plug (X9 steering-column control lever)	Y4 (1) 1st/2nd speed solenoid valve	GY/GN	1.0
7	X1 (16) 18 pole plug (S11 switch 4th control circuit)	Y5 (1) solenoid valve 4th control circuit	Pink	1.0
8	X1 (10) 18 pole plug (H8 hydraulic pressure telltale)	S18 hydraulic oil pressure switch	BU/YE	1.0
9	X1 (8) 18 pole plug (H7 hydraulic oil temperature telltale)	S20 hydraulic oil temperature switch	BU/RD	1.0
10	X1 (9) 18 pole plug (H6 engine oil pressure telltale)	S19 engine oil pressure switch	BU/GN	1.0
11	X1 (7) 18 pole plug (H6 coolant temperature telltale)	S21 temperature switch coolant	BU/WH	1.0
12	X1 (12) 18 pole plug (P2 fuel level indication)	B1 fuel level sensor	VT/BU	1.0
13	X1 (11) 18 pole plug (S1 (19) preheating telltale)	K16 (86) high current relay preheating	BU/GY	1.0
14	X1 (13) 18 pole plug (S16 (1) handbrake switch)	K17 (85) high current relay start	BK	1.0
15	X1 (5) 18 pole plug (F10, 5 A)	Y1 cutoff solenoid	BK/WH	1.0
16	X1 (16) 18 pole plug (S11 switch 4th control circuit)	Y6 (1) solenoid valve 4th control circuit electric	Pink	1.0
17	X1 (15) 18 pole plug (H1 alternator charge telltale)	Alternator G1 (+)	BU	1.0
18	----------	----------	-----	---
19	----------	----------	-----	---
20	X3 (18) 22 pole plug (K5, (87))	X11 front socket (54)	RD/YE	1.5
21	X3 (3) 22 pole plug (F4 5 A)	X11 front socket (58R)	GY/RD	1.0
22	X3 (4) 22 pole plug (F4 5 A)	E1 (4) 6 pole plug, front right parking light	GY/RD	1.0
23	X3 (5) 22 pole plug (F4 5 A)	E2 rear right light	GY/RD	1.0
24	X3 (2) 22 pole plug (F4 5 A)	X12 rear socket (5/58 R) rear light	GY/RD	1.0
25	X3 (6) 22 pole plug (F3 5 A)	X11 front socket (58 L)	GY/BK	1.0

No.	From	To	Colour	mm²
26	X3 (8) 22 pole plug (F3 5 A)	E3 (4) 6 pole plug, front left parking light	GY/BK	1.0
27	X3 (9) 22 pole plug (F3 5 A)	E4 rear left light	GY/BK	1.0
28	X3 (10) 22 pole plug (F3 5 A)	X12 rear socket (7/58 L) rear light	GY/BK	1.0
29	X3 (7) 22 pole plug (X10.2 steering-column control lever)	B2 horn	BN/YE	1.5
30	X3 (20) 22 pole plug (K3, (87))	B3 backup warning system	WH/VT	1.0
31	X3 (13) 22 pole plug (F2, 7.5 A)	E5 (3) 6 pole plug (56a) high beam (right)	WH	1.5
32	X3 (11) 22 pole plug (F9, 7.5 A)	E5 (2) 6 pole plug (56b) low beam (right)	YE	1.5
33	X3 (15) 22 pole plug (F1, 7.5 A)	E6 (3) 6 pole plug (56a) high beam (left)	WH/BK	1.5
34	X3 (21) 22 pole plug (F8, 7.5 A)	E6 (2) 6 pole plug (56b) low beam (left)	YE/BK	1.5
35	X3 (12) 22 pole plug (X10.1 (7) steering-column control lever)	H15 (5) 6 pole plug turn indicator (right)	BK/WH	1.0
36	X3 (16) 22 pole plug (X10.1 (7) steering-column control lever)	H16 turn indicator (rear right)	BK/WH	1.0
37	X3 (14) 22 pole plug (X10.1 (7) steering-column control lever)	X12 rear socket (4/R) turn indicator	BK/WH	1.0
38	X3 (19) 22 pole plug (X10.1 (6) steering-column control lever)	H13 (5) 6 pole plug turn indicator (front left)	BK/GN	1.0
39	X3 (17) 22 pole plug (X10.1 (6) steering-column control lever)	H14 turn indicator (rear left)	BK/GN	1.0
40	X3 (22) 22 pole plug (X10.1 (6) steering-column control lever)	X12 rear socket (1/L) turn indicator	BK/GN	1.0
41	Power supply board	F17 (80 A) main fuse	RD	10.0
42	Earth, board	Earth	BK	4.0
43	F17 (80 A) main fuse	M1 starter	RD	10.0
44	F18 (40 A) preheating fuse	F17 (80 A) main fuse	RD	6.0
45	F18 (40 A) preheating fuse	K17 (30) high current relay start	RD	6.0
46	F18 (40 A) preheating fuse	K16 (30) high current relay preheating	RD	4.0
47	F18 (40 A) preheating fuse	K33 (30) cutoff solenoid relay	RD	4.0
48	K33 (86) cutoff solenoid relay	K32 4 pole plug timer cutoff solenoid	RD/WH	1.0
49	K17 (87) high current relay start	K32 4 pole plug timer cutoff solenoid	RD	1.5

No.	From	To	Colour	mm²
50	K33 (85) cutoff solenoid relay	K32 4 pole plug timer cutoff solenoid	YE	1.0
51	K17 (87) high current relay start	M1 starter	RD/BK	6.0
52	K33 (87) cutoff solenoid relay	Y1 cutoff solenoid	RD/BK	2.5
53	K16 (87) high current relay preheating	R1 preheating facility	BU	4.0
54	M1 starter	G1 alternator	RD	10.0
55	Y4 (2) 1st/2nd speed solenoid valve	Earth	BK	1.0
56	B1 fuel level sensor	Earth	BK	1.0
57	B2 horn	Headlight, left (1) 6 pole plug	BK	1.0
58	B2 horn	Earth	BK	1.5
59	Y7 (2) solenoid valve 3rd control circuit electric	Earth	BK	1.0
60	Y8 (2) solenoid valve 3rd control circuit electric	Earth	BK	1.0
61	Y5 (2) solenoid valve 4rd control circuit electric	Earth	BK	1.0
62	Y6 (2) solenoid valve 4th control circuit electric	Earth	BK	1.0
63	X11 front socket (31)	Earth	BK	1.5
64	Headlight, right (1) 6 pole plug	Earth	BK	1.5
65	K32 4 pole plug timer cutoff solenoid	K16 (85) high current relay preheating	BK	1.0
66	K16 (85) high current relay preheating	Earth	BK	1.0
67	Y3 (2) solenoid valve forwards	Earth	BK	1.0
68	Y2 (2) solenoid valve reverse	Earth	BK	1.0
69	X12 rear socket (31)	Earth	BK	1.5
70	B3 backup warning system	Earth	BK	1.0
71	E2/H16 rear light/turn indicator (right)	Earth	BK	1.0
72	E4/H14 rear light/turn indicator (left)	Earth	BK	1.0
73	Y1 cutoff solenoid	Earth	BK	2.5
74	S18 hydraulic oil pressure switch	Earth	BK	1.0
75	S20 hydraulic oil temperature switch	Earth	BK	1.0
76	X3 (1) 22 pole plug (F15, 7.5 A)	Alternator G1 (IG)	RD/BK	1.0
77	Alternator G1 (IG) (terminal 15)	1 pole plug	RD/BK	1.0
78	Alternator G1 (D+)	1 pole plug	BU	1.0

10.19.11 Cab wiring harness 0113300110 cab 340-01

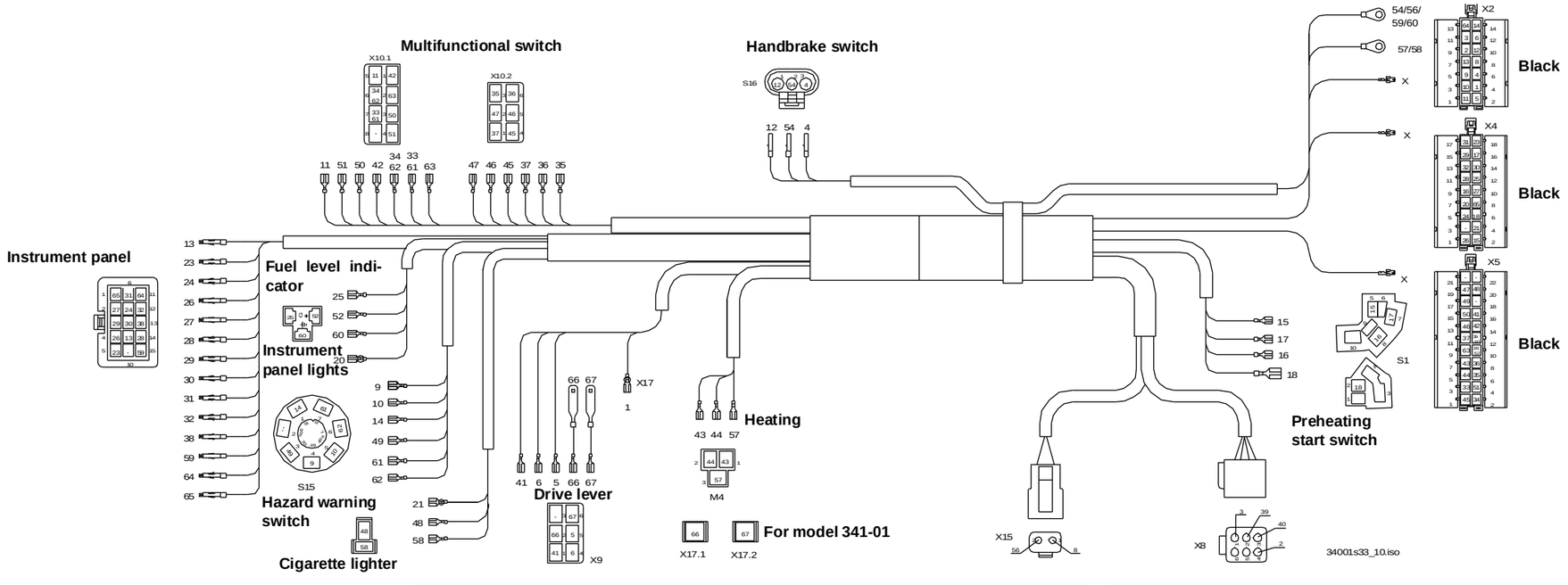

No.	From	To	Colour	mm²
1	X17 1 pole plug (steering-column control lever, left, drive)	X2 (4) 14 pole plug (1st/2nd speed range)	GY/GN	1.0
2	X8 (4) 6 pole plug (control lever)	X2 (9) 14 pole plug (K12, (S14))	BN/YE	1.0
3	X8 (1) 6 pole plug (control lever)	X2 (11) 14 pole plug (K11, terminal 30)	BN/BK	1.0
4	S16 (3) 3 pole plug handbrake switch	X2 (6) 14 pole plug (earth K4/K3)	BN	1.0
5	X9 (5) 6 pole plug (steering-column control lever, left, reverse)	X2 (2) 14 pole plug (K3, (86))	WH/VT	1.0
6	X9 (4) 6 pole plug (steering-column control lever, left, forwards)	X2 (12) 14 pole plug (K4, (86))	GN/VT	1.0
7	----------	----------	-----	---
8	X15 (1) 2 pole plug float position solenoid	X2 (8) 14 pole plug (F12, 15 A)	WH/BU	1.0
9	S15 (4) 7 pole plug hazard warning switch (49)	X2 (5) 14 pole plug (K6 (+) turn indicator relay)	BK/ WH/RD	1.0
10	S15 (5) 7 pole plug hazard warning switch (49a)	X2 (3) 14 pole plug (K6 (C) turn indicator relay)	BK/ WH/GN	1.0
11	X10.1 (5) 8 pole plug (steering-column control lever, right)	X2 (1) 14 pole plug (K6 (C) turn indicator relay)	WH/RD	1.0
12	S16 (1) 3 pole plug handbrake switch	X2 (10) 14 pole plug (K17 (85) starting relay))	BN/VT	1.0
13	15 pole plug (9) H10 (turn indicator machine)	X2 (7) 14 pole plug (K6 (R) turn indicator relay))	WH/GN	1.0
14	S15 (1) 7 pole plug hazard warning switch (15)	X2 (14) 14 pole plug (F15, 7.5 A)	RD/BK	1.5
15	S1 (5), terminal 15 (preheating start switch)	X4 (2) 18 pole plug (K1 (86)	RD/BK	1.0
16	S1 (8), terminal 19 (preheating start switch)	X4 (9) 18 pole plug (K16, (86) preheating relay)	BU/GY	1.0
17	S1 (1), terminal 50a (preheating start switch)	X4 (16) 18 pole plug (K17, (86) starting relay	BU/BK	1.0
18	S1 (2), terminal 30 (preheating start switch)	X4 (6) 18 pole plug (F5, 10 A)	RD	2.5
19	----------	----------	-----	---
20	E12 instrument lighting fuel level indication	X4 (7) 18 pole plug (F4, 5 A)	GY/RD	1.0
21	E11 lighting cigarette lighter	X4 (4) 18 pole plug (F3, 5 A)	GY/BK	1.0
22	----------	----------	-----	---
23	15 pole plug (5) H9 rear attachment turn indicator telltale	X4 (18) 18 pole plug (K6, (R2))	BK/BU	1.0
24	15 pole plug (7) H1/P1 charge function telltale	X4 (5) 18 pole plug (G1, (D+))	BU	1.0

No.	From	To	Colour	mm²
25	P2 (G) 3 pole plug fuel level indication	X4 (12) 18 pole plug (B1 fuel level sensor)	VT/BU	1.0
26	15 pole plug (4) H2 high beam telltale	X4 (1) 18 pole plug (E6 (56a) high beam (left)	WH	1.0
27	15 pole plug (2) H3 handbrake telltale	X4 (10) 18 pole plug (K17, (85))	BN/WH	1.0
28	15 pole plug (14) H4 preheating telltale	X4 (11) 18 pole plug (K16, (86))	BU/GY	1.0
29	15 pole plug (3) H5 coolant telltale	X4 (15) 18 pole plug (S21 coolant pressure switch)	BU/WH	1.0
30	15 pole plug (8) H6 engine oil pressure telltale	X4 (14) 18 pole plug (S19 engine oil pressure switch)	BU/GN	1.0
31	15 pole plug (6) H7 engine oil temperature telltale	X4 (17) 18 pole plug (S20 hydraulic oil temperature)	BU/RD	1.0
32	15 pole plug (12 H8 hydraulic oil pressure telltale)	X4 (13) 18 pole plug (S18 hydraulic oil pressure switch)	BU/YE	1.0
33	X10.1 (7) 8 pole plug (steering-column control lever, right)	X5 (3) 22 pole plug (turn indicator, right)	BK/GN	1.0
34	X10.1 (6) 8 pole plug (steering-column control lever, right)	X5 (2) 22 pole plug (turn indicator, left)	BK/WH	1.0
35	X10.2 (3) 8 pole plug (steering-column control lever, right)	X5 (6) 22 pole plug (F8/F9 (7.5 A))	YE	1.5
36	X10.2 (6) 6 pole plug (steering-column control lever, right)	X5 (8) 22 pole plug (F1/F2 (7.5 A))	WH	1.5
37	X10.2 (1) 6 pole plug (steering-column control lever, right)	X5 (11) 22 pole plug (B2 horn)	BN/YE	1.5
38	15 pole plug (13) power supply	X5 (10) 22 pole plug (F10, 5 A)	RD/BK	1.0
39	X8 (2) 6 pole plug (control lever)	X5 (12) 22 pole plug (F10, 5 A)	OG	1.0
40	X8 (3) 6 pole plug (control lever)	X5 (12) 22 pole plug (F10, 5 A)	OG	1.0
41	X9 (1) 6 pole plug (steering-column control lever, left, drive)	X5 (16) 22 pole plug (F13, 7.5 A)	RD	1.0
42	X10.1 (1) 8 pole plug (steering-column control lever, right)	X5 (14) 22 pole plug (F11, 15 A)	GY/GN	1.5
43	M4 (1) 3 pole plug heating fan/2nd speed	X5 (7) 22 pole plug (S5 (1) heating switch)	RD/WH	1.5
44	M4 (2) 3 pole plug heating fan/1st speed	X5 (5) 22 pole plug (S5 (5) heating switch)	RD/YE	1.5

No.	From	To	Colour	mm²
45	X10.2 (4) 6 pole plug (steering-column control lever, right)	X5 (1) 22 pole plug (M5 washer pump)	GN/BK	1.0
46	X10.2 (5) 6 pole plug (steering-column control lever, right)	X5 (13) 22 pole plug (S4 light switch)	WH/BK	1.0
47	X10.2 (2) 6 pole plug (steering-column control lever, right)	X5 (19) 22 pole plug (F7, 25 A)	WH	1.5
48	E11 cigarette lighter	X5 (20) 22 pole plug (F6, 25 A)	RD/BK	1.5
49	S15 (3) 7 pole plug hazard warning switch (30)	X5 (17) 22 pole plug (F5, 10 A)	RD/YE	1.5
50	X10.1 (3) 8 pole plug (steering-column control lever, right)	X5 (15) 22 pole plug (front wiper)	GN/WH	1.0
51	X10.1 (4) 8 pole plug (steering-column control lever, right)	X5 (4) 22 pole plug (M2, (53a))	GN/BK	1.0
52	3 pole plug (+) fuel level indication, power supply	X5 (10) 22 pole plug (F10, 5 A)	RD/BK	1.0
53	----------	----------	-----	---
54	Earth, board	S16 (2) 3 pole plug (handbrake switch)	BK	1.0
55	----------	----------	-----	---
56	Earth, board	X15 (2) 2 pole plug (float position)	BK	1.0
57	Earth, board	M4 (3) 3 pole plug (heating fan)	BK	1.5
58	Earth, board	Cigarette lighter	BK	1.5
59	Earth, board	15 pole plug (15) indicator	BK	1.0
60	Earth, board	3 pole plug (earth) fuel level indication	BK	1.0
61	X10.1 (7) 8 pole plug (steering-column control lever, right)	S15 (7) 7 pole plug hazard warning switch (R)	BK/WH	1.0
62	X10.1 (6) 8 pole plug (steering-column control lever, right)	S15 (6) 7 pole plug hazard warning switch (L)	BK/GN	1.0
63	X10.1 (2) 8 pole plug (steering-column control lever, right)	X5 (9) 22 pole plug (front/rear wiper)	BU/GN	1.0
64	15 pole plug (11), (load stabiliser/hose burst valve telltale)	X2 (13) 14 pole plug (load stabiliser/hose burst valve)	RD/YE	1.0
65	15 pole plug (1) 3rd control circuit telltale	X4 (8) 18 pole plug (S14 3rd control circuit)	VT	1.0
66	X9 6 pole housing (2) 1st/2nd speed range (340-01)	X17.1 1 pole flat plug housing (natural coloured)	GY/GN	1.0
67	X9 6 pole housing (6) 1st/2nd speed range (341-01)	X17.2 1 pole flat plug housing (red)	GY/GN	1.0

10.19.12 Wiring diagram 011010090 (340-01/341-01) (engine TNE 88)

Ref.	Description	Section	Loc.
A1	Radio	X6/2	Option
B1	Fuel level sensor	X1/2	
B2	Horn	X3/2	
B3	Backup warning system	X3/2	Option
B4	Loudspeaker	X6/2	Option
B5	Loudspeaker	X6/2	Option
E1	Front right parking light	X3/2	
E2	Rear right light	X3/2	
E3	Front left parking light	X3/2	
E4	Rear left light	X3/2	
E5	High, low beam (right)	X3/2	
E6	High, low beam (left)	X3/2	
E7	Rear working light	X6/2	Option
E8	Front working light	X6/2	Option
E9	Front working light	X6/2	Option
E10	Interior light with switch	X6/2	
E11	Cigarette lighter with light	X5/2	
E12	Instrument lighting fuel level sensor	X4/2	
F1..F16	Fuses		
F17	Main fuse		
F18	Preheating/start fuse		
G1	Alternator	2	
G2	Battery	2	
H1	Alternator charge telltale	X4/2	
H2	High beam telltale	X4/2	
H3	Handbrake telltale	X4/2	
H4	Preheating telltale	X4/2	
H5	Coolant temperature telltale	X4/2	
H6	Engine oil pressure telltale	X4/2	
H7	Hydraulic oil temperature telltale	X4/2	
H8	Hydraulic oil pressure telltale	X4/2	
H9	Rear attachment turn indicator telltale	X4/2	
H10	Machine turn indicator telltale	X2/2	
H11	3rd control circuit telltale	X4/2	
H13	Front left turn indicator	X3/2	
H14	Rear left turn indicator	X3/2	
H15	Front right turn indicator	X3/2	
H16	Rear right turn indicator	X3/2	
H17	Rotating beacon	X6/2	Option
H18	Hose burst valve telltale	X2/2	Option
K1	High current relay 70 A	1	
K3	Reverse driving 40/60 A	X1/1	
K4	Forwards driving 40/60 A	X1/1	
K5	Front socket 40/60 A	X3/1	Option
K6	Turn indicator relay	X2/1	
K7	Wiper speed (1) 40/60 A	X5/1	
K13	Unlock 40/60 A	X1/1	
K14	Lock 40/60 A	X1/1	
K16	High current relay preheating	2	
K17	Start high current relay	2	
K31	Time lag relay (5 min)	X2/1	
K32	Time lag relay (1 sec) cutoff solenoid	X1/2	
K33	High current relay cutoff solenoid	X1/2	
M1	Starter	2	

Ref.	Description	Section	Loc.
M2	Front wiper motor	X6/2	
M3	Rear wiper motor	X6/2	
M4	Engine fan	X5/2	
M5	Washer pump	X6/2	
P1	Hour meter	X4/2	
P2	Fuel level indication	X4/2	
R1	Glow plug	2	
R2	Heated rear window	X6/2	
S1	Preheating start switch	X4/2	
S2	Steering-column control lever, right	X5/2	
S3	Steering-column control lever (left)	X2/2	
S4	Light switch	X6/1	
S5	Heating switch	X5/1	
S6	Working light switch	X6/1	Option
S7	Rotating beacon switch	X6/1	Option
S8	Load stabiliser switch	X1/1	Option
S9	Front socket switch	X2/1	Option
S10	Heated rear window switch	X2/1	
S11	4th control circuit switch	X1/1	Option
S13	Continuous operation switch 3rd control circuit	X1/1	
S14	3rd control circuit switch	X1/1	
S15	Hazard warning switch	X2/2	
S16	Handbrake switch	X2/2	
S17	Switch in control lever	X2/2	
S18	Hydraulic oil pressure switch	X1/2	
S 19	Engine oil pressure switch	X1/2	
S20	Hydraulic oil temperature switch	X1/2	
S20	Hydraulic oil temperature switch	X1/2	
S21	Temperature switch coolant	X1/2	
V1..V7	Suppressor diode	X1/2	
V8,V9	Blocking diode	X1/1	
V10.V12	Blocking diode	X6/1	
V13.V15	Suppressor diode	X1/2	
V16,V17	Blocking diode	X5/1	
V18	Suppressor diode	X1/2	341-01
W1	Radio aerial	X6/2	
X1	Connector engine/valves		
X2	Cab signal connector		
X3	Frame outputs connector		
X4	Instrument signals connector		
X5	Connector fuse terminal 15		
X6	Connector fuse terminal 30		
X7	13 pole drive interlock connector		
X8	Connector control lever	X2/2	
X9	Connector steering column (drive)	X2/2	
X10.1	8 pole steering column connector (right)		
X10.2	6 pole steering column connector (right)		
X11	Front socket	X3/2	
X12	Rear socket	X3/2	
X13	Radio connection grey	X5/2	
X14	Radio connection brown	X5/2	
X15	Connector float position	X2/2	
X16	Connector roof wiring harness	X6/2	
X17	Connector 1st/2nd speed range	X2/2	

Ref.	Description	Section	Loc.
X17.1	Connector 1st/2nd speed range natural coloured	X2/2	341-01
X17.2	Connector 1st/2nd speed range red	X2/2	341-01
Y1	Cutoff solenoid	X1/2	
Y2	Forwards driving solenoid valve	X1/2	
Y3	Reverse driving solenoid valve	X1/2	
Y4	1st/2nd speed solenoid valve	X1/2	
Y5	Solenoid valve 4th control circuit	X1/2	
Y6	Solenoid valve 4th control circuit	X1/2	
Y7	Solenoid valve 3rd control circuit	X1/2	
Y8	Solenoid valve 3rd control circuit	X1/2	
Y9	Float position solenoid valve	X2/2	Option
Y10	Load stabiliser solenoid valve	X1/2	Option
Y11	Load stabiliser solenoid valve	X1/2	Option
Y12	Hose burst valve solenoid (OFF)	X1/2	Option
Y13	Driving direction identification solenoid valve	X1/2	341-01

Legend: Wiring diagram 011010090 (340-01/341-01)

10.19.13 Wiring diagram 011010090 (340-01/341-01) (engine TNE 88)

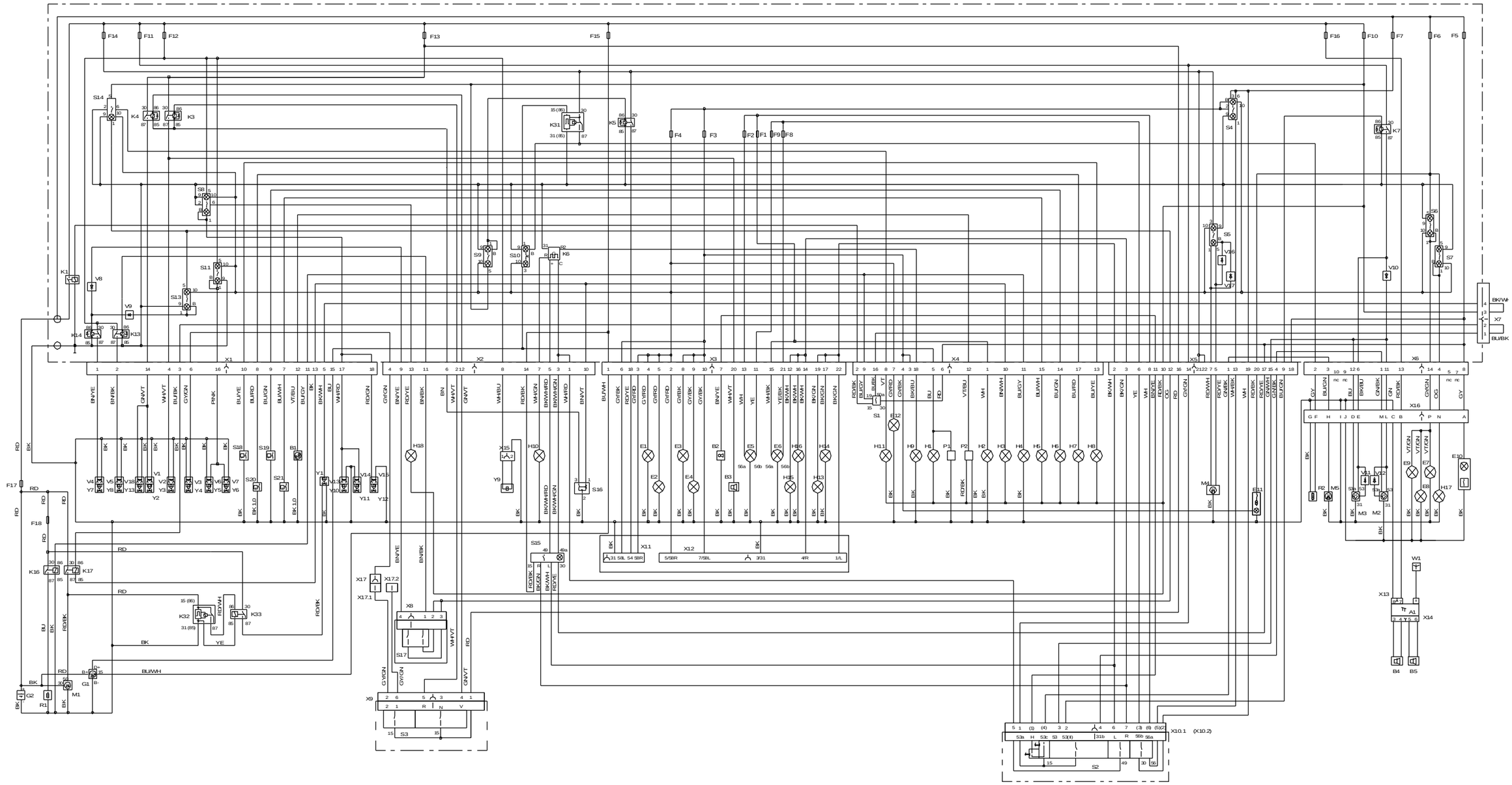

10.19.14 Legend: Wiring diagram 1000110532 model 340-01/341-01 (180/280) (engine TNV 88)

Identification	Consumer	Section	Remark
A1	Radio	X6/2	Option
B1	Fuel level sensor	X1/2	
B2	Horn	X3/2	
B3	Backup warning system	X3/2	Option
B4	Loudspeaker	X6/2	Option
B5	Loudspeaker	X6/2	Option
E1	Front right parking light	X3/2	
E2	Rear right light	X3/2	
E3	Front left parking light	X3/2	
E4	Rear left light	X3/2	
E5	High, low beam (right)	X3/2	
E6	High, low beam (left)	X3/2	
E7	Rear working light	X6/2	Option
E8	Front working light	X6/2	Option
E9	Front working light	X6/2	Option
E10	Interior light with switch	X6/2	
E11	Cigarette lighter with light	X5/2	
E12	Instrument lighting fuel level sensor	X4/2	
F1..F16	Fuses		
F17	Main fuse		
F18	Preheating/start fuse		
G1	Alternator	2	
G2	Battery	2	
H1	Alternator charge telltale	X4/2	
H2	High beam telltale	X4/2	
H3	Handbrake telltale	X4/2	
H4	Preheating telltale	X4/2	
H5	Coolant temperature telltale	X4/2	
H6	Engine oil pressure telltale	X4/2	
H7	Hydraulic oil temperature telltale	X4/2	
H8	Hydraulic oil pressure telltale	X4/2	
H9	Rear attachment turn indicator telltale	X4/2	
H10	Machine turn indicator telltale	X2/2	
H11	3rd control circuit telltale	X4/2	
H13	Front left turn indicator	X3/2	
H14	Rear left turn indicator	X3/2	
H15	Front right turn indicator	X3/2	
H16	Rear right turn indicator	X3/2	
H17	Rotating beacon	X6/2	Option
H18	Hose burst valve telltale	X2/2	Option
H19	Brake lights	X5/2	Option
H20	Brake lights	X5/2	Option
K1	High current relay 70 A	1	
K3	Reverse driving 40/60 A	X1/1	

Identification	Consumer	Section	Remark
K4	Forwards driving 40/60 A	X1/1	
K5	Front socket 40/60 A	X3/1	Option
K6	Turn indicator relay	X2/1	
K7	Wiper speed 1 40/60A	X5/1	
K13	Unlock 40/60 A	X1/1	
K14	Lock 40/60 A	X1/1	
K16	High current relay preheating	2	
K17	Start high current relay	2	
K31	Time lag relay 5 min	X2/1	
K32	Time lag relay 1s cutoff solenoid	X1/2	
K33	High current relay cutoff solenoid	X1/2	
M1	Starter	2	
M2	Front wiper motor	X6/2	
M3	Rear wiper motor	X6/2	
M4	Engine fan	X5/2	
M5	Washer pump	X6/2	
M9	Fuel pump	X1/2	
P1	Hour meter	X4/2	
P2	Fuel level indication	X4/2	
R1	Glow plug	2	
R2	Heated rear window	X6/2	
S1	Preheating start switch	X4/2	
S2	Steering-column control lever, right	X5/2	
S3	Steering-column control lever (left)	X2/2	
S4	Light switch	X6/1	
S5	Heating switch	X5/1	
S6	Working light switch	X6/1	Option
S7	Rotating beacon switch	X6/1	Option
S8	Load stabiliser switch	X1/1	Option
S9	Front socket switch	X2/1	Option
S10	Heated rear window switch	X2/1	
S11	4th control circuit switch	X1/1	Option
S12	Brake light switch	X5/2	Option
S13	Continuous operation switch 3rd control circuit	X1/1	
S14	3rd control circuit switch	X1/1	
S15	Hazard warning switch	X2/2	
S16	Handbrake switch	X2/2	
S17	Switch in control lever	X2/2	
S18	Hydraulic oil pressure switch	X1/2	
S 19	Engine oil pressure switch	X1/2	
S20	Hydraulic oil temperature switch	X1/2	
S21	Temperature switch coolant	X1/2	
V1..V7	Suppressor diode	X1/2	
V8,V9	Blocking diode	X1/1	
V10.V12	Blocking diode	X6/1	

Identification	Consumer	Section	Remark
V13.V15	Suppressor diode	X1/2	
V16,V17	Blocking diode	X5/1	
V18	Suppressor diode	X1/2	341-01
W1	Radio aerial	X6/2	
X1	Connector engine/valves		
X2	Connector cab signals		
X3	Connector frame outputs		
X4	Instrument signals connector		
X5	Connector fuse terminal 15		
X6	Connector fuse terminal 30		
X7	Min. 13 pole drive interlock connector		
X8	Connector control lever	X2/2	
X9	Connector steering column (drive)	X2/2	
X10.1	8 pole steering column connector (right)		
X10.2	6 pole steering column connector (right)		
X11	Front socket	X3/2	
X12	Rear socket	X3/2	
X13	Radio connection grey	X5/2	
X14	Radio connection brown	X5/2	
X15	Connector float position	X2/2	
X16	Connector roof wiring harness	X6/2	
X17	Connector 1st/2nd speed range	X2/2	
X17.1	Connector 1st/2nd speed range natural coloured	X2/2	340-01
X17.2	Connector 1st/2nd speed range red	X2/2	341-01

Legend: Wiring diagram 1000110532

10.19.15 Wiring diagram 1000110532 model 340-01/341-01 (180/280) (engine TNV 88)

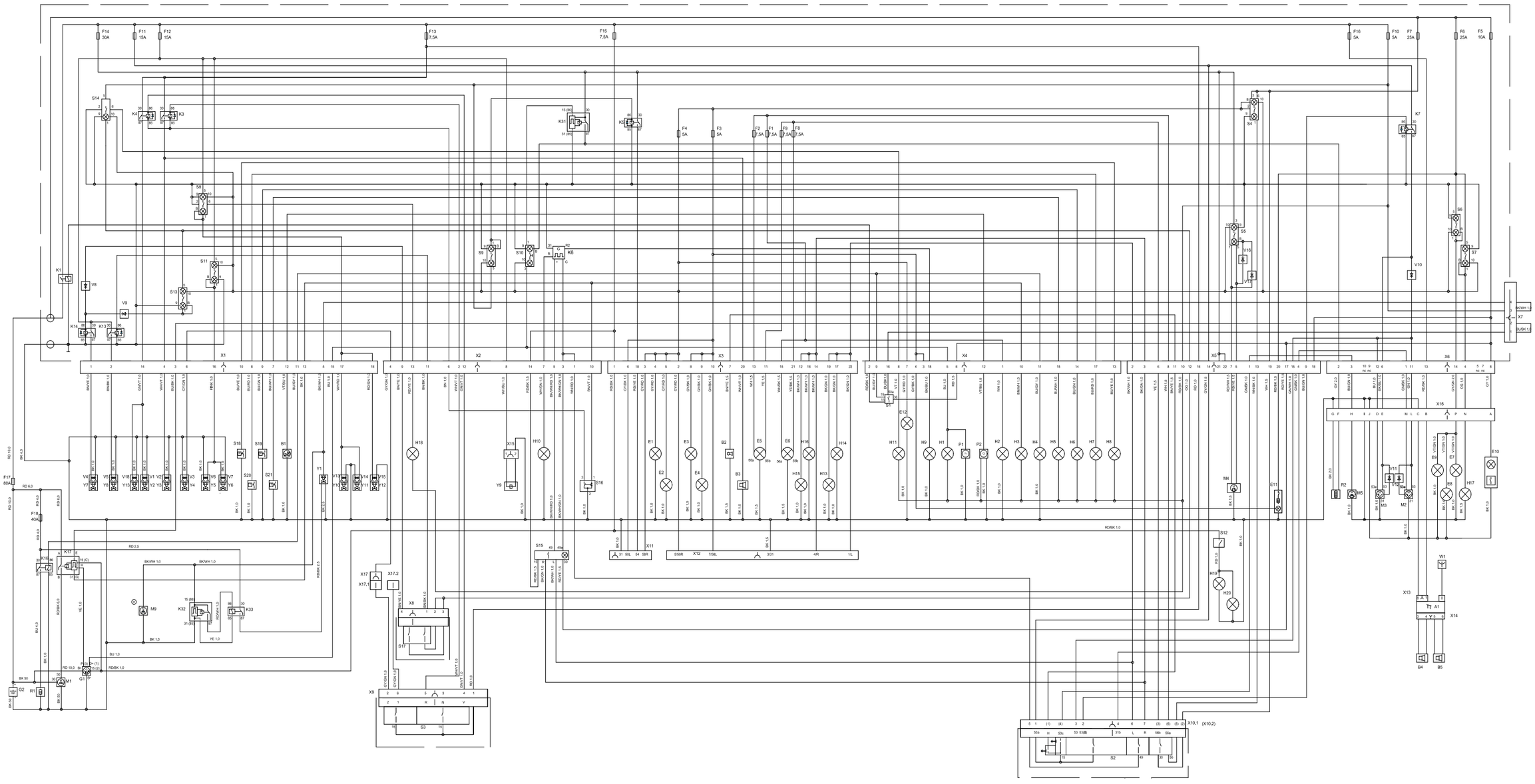

10.19.16 Legend: Wiring diagram 1000128026 model 341-02 (280) (engine TNV 88)

Identification	Consumer	Section	Remarks
A1	Radio	X6/2	Option
B1	Fuel level sensor	X1/2	
B2	Horn	X3/2	
B3	Backup warning system	X3/2	Option
B4	Loudspeaker	X6/2	Option
B5	Loudspeaker	X6/2	Option
D2	Hold electronics control lever	X2/2	
E1	Front right parking light	X3/2	
E2	Rear right light	X3/2	
E3	Front left parking light	X3/2	
E4	Rear left light	X3/2	
E5	High, low beam (right)	X3/2	
E6	High, low beam (left)	X3/2	
E7	Rear working light	X6/2	Option
E8	Front working light	X6/2	Option
E9	Front working light	X6/2	Option
E10	Interior light with switch	X6/2	
E11	Cigarette lighter with light	X5/2	
E12	Instrument lighting fuel level sensor	X4/2	
F1..F16	Fuses		
F17	Main fuse		
F18	Preheating/start fuse		
G1	Alternator	2	
G2	Battery	2	
H1	Alternator charge telltale	X4/2	
H2	High beam telltale	X4/2	
H3	Handbrake telltale	X4/2	
H4	Preheating telltale	X4/2	
H5	Coolant temperature telltale	X4/2	
H6	Engine oil pressure telltale	X4/2	
H7	Hydraulic oil temperature telltale	X4/2	
H8	Hydraulic oil pressure telltale	X4/2	
H9	Rear attachment turn indicator telltale	X4/2	
H10	Machine turn indicator telltale	X2/2	
H11	3rd control circuit telltale	X4/2	
H13	Front left turn indicator	X3/2	
H14	Rear left turn indicator	X3/2	
H15	Front right turn indicator	X3/2	
H16	Rear right turn indicator	X3/2	
H17	Rotating beacon	X6/2	Option
H18	Hose burst valve telltale	X2/2	Option
H19	Brake lights	X5/2	Option
H20	Brake lights	X5/2	Option
H21	Telltale forwards	X1/2	
H22	Telltale reverse	X1/2	
K1	High current relay 70 A	1	
K3	Reverse driving 40/60 A	X1/1	
K4	Forwards driving 40/60 A	X1/1	
K5	Front socket 40/60 A	X3/1	Option
K6	Turn indicator relay	X2/1	

Identification	Consumer	Section	Remarks
K7	Wiper speed 1 40/60A	X5/1	
K13	Unlock 40/60 A	X1/1	
K14	Lock 40/60 A	X1/1	
K16	High current relay preheating	2	
K17	Start high current relay	2	
K31	Time lag relay 5 min	X2/1	
K32	Time lag relay 1s cutoff solenoid	X1/2	
K33	High current relay cutoff solenoid	X1/2	
M1	Starter	2	
M2	Front wiper motor	X6/2	
M3	Rear wiper motor	X6/2	
M4	Engine fan	X5/2	
M5	Washer pump	X6/2	
M9	Fuel pump	X1/2	
P1	Hour meter	X4/2	
P2	Fuel level indication	X4/2	
R1	Glow plug	2	
R2	Heated rear window	X6/2	
S1	Preheating start switch	X4/2	
S2	Steering-column control lever, right	X5/2	
S4	Light switch	X6/1	
S5	Heating switch	X5/1	
S6	Working light switch	X6/1	Option
S7	Rotating beacon switch	X6/1	Option
S8	Load stabiliser switch	X1/1	Option
S9	Front socket switch	X2/1	Option
S10	Heated rear window switch	X2/1	
S11	4th control circuit switch	X1/1	Option
S12	Brake light switch	X5/2	Option
S13	Continuous operation switch 3rd control circuit	X1/1	
S14	3rd control circuit switch	X1/1	
S15	Hazard warning switch	X2/2	
S16	Handbrake switch	X2/2	
S18	Hydraulic oil pressure switch	X1/2	
S 19	Engine oil pressure switch	X1/2	
S20	Hydraulic oil temperature switch	X1/2	
S21	Temperature switch coolant	X1/2	
S22	1st/2nd speed switch	X2/2	
S25	Tip switch neutral	X2/2	
S30	“Unlock” tip switch	X2/2	
S31	“Lock” tip switch	X2/2	
S34	Switch forwards	X2/2	
S35	Switch reverse	X2/2	
V1..V7	Suppressor diode	X1/2	
V8,V9	Blocking diode	X1/1	
V10.V12	Blocking diode	X6/1	
V13.V15	Suppressor diode	X1/2	
V16,V17	Blocking diode	X5/1	
V18	Suppressor diode	X1/2	
W1	Radio aerial	X6/2	

Identification	Consumer	Section	Remarks
X1	Connector engine/valves		
X2	Connector cab signals		
X3	Connector frame outputs		
X4	Instrument signals connector		
X5	Connector fuse terminal 15		
X6	Connector fuse terminal 30		
X7	Min. 13 pole drive interlock connector		
X8	Connector control lever	X2/2	
X9	Connector control lever	X2/2	
X10.1	8 pole steering column connector (right)		
X10.2	6 pole steering column connector (right)		
X11	Front socket	X3/2	
X12	Rear socket	X3/2	
X13	Radio connection grey	X5/2	
X14	Radio connection brown	X5/2	
X15	Connector float position	X2/2	
X16	Connector roof wiring harness	X6/2	
Y1	Cutoff solenoid	X1/2	
Y2	Forwards driving solenoid valve	X1/2	
Y3	Reverse driving solenoid valve	X1/2	
Y4	1st/2nd speed solenoid valve	X1/2	
Y5	Solenoid valve 4th control circuit	X1/2	
Y6	Solenoid valve 4th control circuit	X1/2	
Y7	Solenoid valve 3rd control circuit	X1/2	
Y8	Solenoid valve 3rd control circuit	X1/2	
Y9	Float position solenoid valve	X2/2	Option
Y10	Load stabiliser solenoid valve	X1/2	Option
Y11	Load stabiliser solenoid valve	X1/2	Option
Y12	Hose burst valve solenoid (OFF)	X1/2	Option
Y13	Driving direction identification solenoid valve	X1/2	

Legend:Wiring diagram 1000128026

10.19.17 Wiring diagram 1000128026 model 341-02 (280) (engine TNV 88)

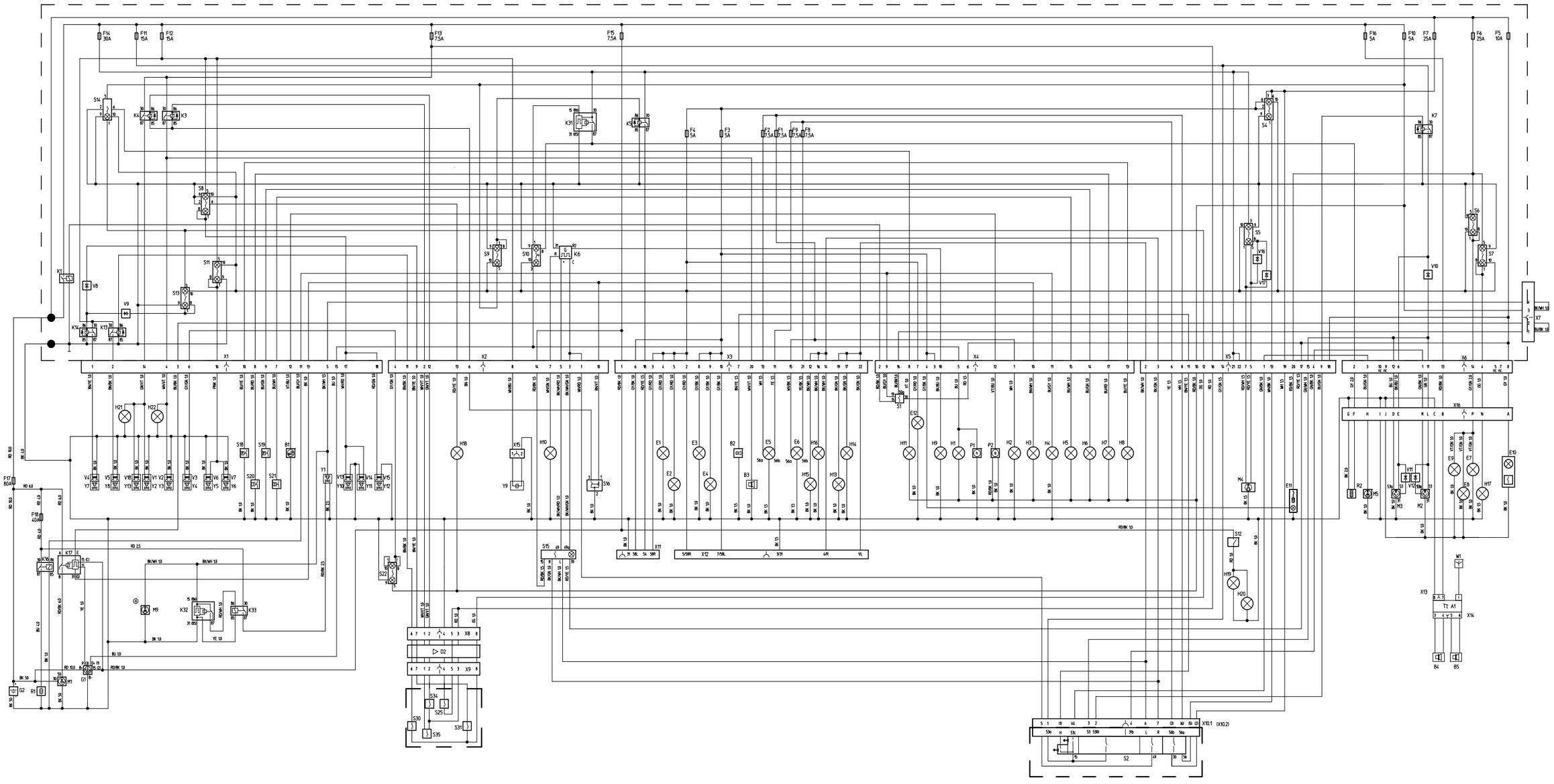

10.19.18 Roof wiring harness

340-01 (180)
341-01/341-02 (280)

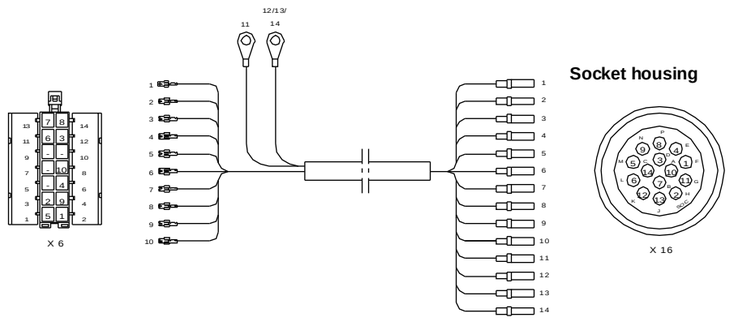

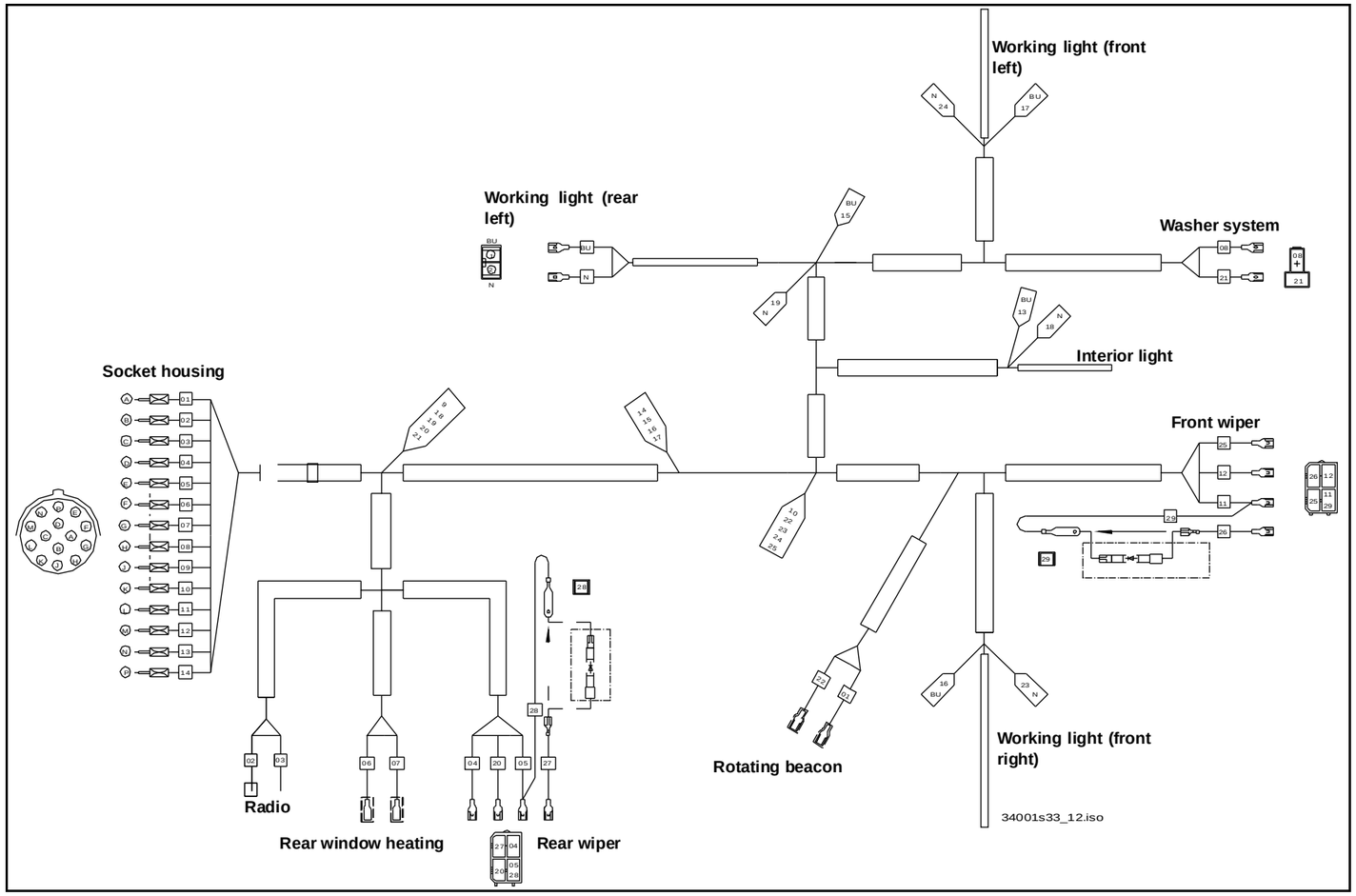

Roof wiring harness 0113300210

No.	From	To	Colour	mm²
	X6 (2) 14 pole plug (time lag relay) K31	X16 (F) 14 pole plug (heated rear window)	GY	2.0
	X6 (3) 14 pole plug (blocking diode)	X16 (H) 14 pole plug (washer pump)	BU/GN	1.0
	X6 (12) 14 pole plug (rear wiper switch)	X16 (D) 14 pole plug (rear wiper motor)	BU	1.0
	X6 (6) 14 pole plug (rear wiper switch)	X16 (E) 14 pole plug (rear wiper motor)	BK/BU	1.0
	X6 (1) 14 pole plug	X16 (M) 14 pole plug (front wiper motor)	GN/BK	1.0
	X6 (11) 14 pole plug	X16 (L) 14 pole plug (wiper)	GN	1.0
	X6 (13) 14 pole plug (fuse)	X16 (B) 14 pole plug (radio)	RD/BK	1.0
	X6 (14) 14 pole plug (working light switch)	X16 (P) 14 pole plug (working light)	GY/GN	2.0
	X6 (4) 14 pole plug (rotating beacon switch)	X16 (N) 14 pole plug (rotating beacon)	OG	1.0
	X6 (8) 14 pole plug	X16 (A) 14 pole plug (interior light)	GY	1.0
	X16(G) 14 pole plug (rear window earth)	Earth	BK	2.5
	X16(K) 14 pole plug (front wiper, working light earth)	Earth	BK	1.5
	X16(J) 14 pole plug (earth rear wiper, rotating beacon working light)	Earth	BK	1.5
	X16(C) 14 pole plug (radio earth)	Earth	BK	1.0

Roof wiring harness 0000809831

No.	mm²	Colour	Assignment	From		To
	1.0	GN	Interior light	A	P01	P09
	1.0	RD/BK	Radio	B	P01	P02
	1.0	BK	Radio (+)	C	P01	P02
	1.0	BU	Rear wiper (+)	D	P01	P04
	1.0	BU/BK	Rear wiper	E	P01	P04
	2.5	WH	Rear window heating	F	P01	P03
	2.5	BK	Rear window heating (-)	G	P01	P03
	1.0	GN/BK	Washer system	H	P01	P10
	2.0	BK	Connection 18, 19, 20, 21	J	P01	D01
	2.0	BK	Connection 22, 23, 24, 25	K	P01	D03
	1.0	GN	Front wiper	L	P01	P08
	1.0	GN/BK	Front wiper (+)	M	P01	P08
	1.0	GN	Rotating beacon	N	P01	D06/P06
	2.0	VT	Connection 15, 16, 17	P	P01	D02

No.	mm²	Colour	Assignment	From		To
	1.0	VT/GN	Reversing light		D02	D10/P11
	1.0	VT/GN	Headlight (right)		D02	D08/P07
	1.0	VT/GN	Headlight (left)		D02	D12/P12
	1.0	BK	Rotating beacon (-)		D01	D07/P06
	1.0	BK	Rear working light (-)		D01	D11/P11
	1.0	BK	Wiper (-)		D01	P04
	1.0	BK	Washer system (-)		D01	P10
	1.0	BK	Interior light (-)		D03	P09
	1.0	BK	Headlight, right (-)		D03	D09/P07
	1.0	BK	Headlight, left (-)		D03	D13/P12
	1.0	BK	Front wiper (-)		D03	P08

10.20 Cable routing from steering-column control lever S3 on left, starting plug X9

Explanation:

- The number in brackets ( ) stands for the slot number on the plug
- The number without brackets stands for the cable number

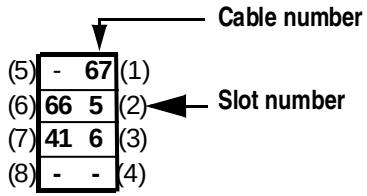

Cable number with colour Wiring harness drawing. 011300110			to plug and socket connection Wiring harness drawing. 011300110				to plug and socket connection Wiring harness drawing. 0113300010				to plug and socket connection Wiring harness drawing.				Fuse	Other	Use
(No.)	No.	Colour	X	(No.)	No.	Colour	X	(No.)	No.	Colour	X	(No.)	No.	Col-our			
7	41	RD	5	16	41	RD									F 13 7.50 A		Power supply (+)
6	66	GY/GN	2	4	1	GY/GN	1	6	6	GY/GN							Y 4 magnet 1st and 2nd speed range
3	6	GN/VT	2	12	6	GN/VT	1	14	3	GN/VT						to K 4, termi-nal 86	Y 2 solenoid valve forwards
2	5	WH/VT	2	2	5	WH/VT	1	4	4	WH/VT						to K 3, termi-nal 86	Y 3 solenoid valve reverse
1	67	GY/GN															

10.21 Cable routing from steering-column control lever S2 on right, starting plug 10.1

Explanation:

- The number in brackets ( ) stands for the slot number on the plug
- The number without brackets stands for the cable number

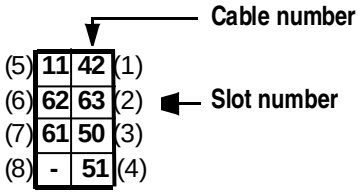

Cable number with colour Wiring harness drawing 011300110			to plug and socket connection Wiring harness drawing 011300110				to plug and socket connection Wiring harness drawing 0113300010/0113300210				to plug and socket connection Wiring harness drawing 0113300210				to cab wiring harness 0000809831				Other	Use
(No.)	No.	Colour	X	(No.)	No.	Colour	X	(No.)	No.	Col-our	X	(No.)	No.	Col-our	X	(No.)	No.	Colour		
1	42	GY/GN	5	14	42	GY/GN													F11/15 A	Fuse F11
2	63	BU/GN	5	9	63	BU/GN													Relay K7 terminal 86	Wiper 1st speed
3	50	GN/VH	5	15	6	GN/VH	6	11	6	GN	16	L	6	GN		L	11	GN		Front wiper terminal 53 (+)
4	51	GN/BK	5	4	51	GN/BK	6	1	5	GN/BK	16	M	5	GN/BK		M	12	GN/BK		Front wiper terminal 53a (+)
5	11	WH/RD	2	1	11	WH/RD	6	3	2	BU/GN	16	H	2	BU/GN		H	08	GN/BK		Washer system M5 (+)
6	34	BK/WH	5	2	34	BK/WH	3	22	40	BK/GN									Rear socket X12	Left turn indicator (+)
6	62	BK/GN																	Hazard warning switch S15 (6) L	to hazard warning switch terminal L
7	33	BK/GN	5	3	33	BK/GN	3	14	37	BK/ WH									Rear socket X12	Right turn indicator
7	61	BK/WH																	Hazard warning switch S15 (6) L	to hazard warning switch terminal R

krameRALLRAD

10.22 Cable routing from steering-column control lever S2 on right, starting plug 10.2

Explanation:

- The number in brackets ( ) stands for the slot number on the plug
- The number without brackets stands for the cable number

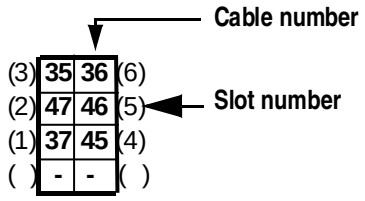

Cable number with colour Wiring harness drawing 011300110			to plug and socket connection Wiring harness drawing 011300110				to plug and socket connection Wiring harness drawing 0113300010				to plug and socket connection Wiring harness drawing 0113300210				Fuse	Other	Use
(No.)	No.	Colour	X	(No.)	No.	Colour	X	(No.)	No.	Colour	X	(No.)	No.	Colour			
1	37	BN/YE	5	11	37	BN/YE	3	7	29	BN/YE							Horn
2	47	WH	5	19	47	WH									F7/25 A		Lights
3	35	YE	5	6	35	YE	3	11	32	YE					F 8/F 9/7.5 A	to X 3	65b low beam
4	45	GN/BK	5	1	45	GN/BK					6	3	2	BU/GN		to X 16 (H) GN/ BK	Washer system (+)
5	46	WH/BK	5	13	46	WH/ BK											
6	36	WH	5	8	36	WH									F 1/F 2/7.5 A		S 4 light switch terminal 1 E 5/ E 6/56a high beam

KRAMER-WERKE GmbH keep abreast of the latest technical developments and constantly improve their products. For this reason, we may from time to time need to make changes to diagrams and descriptions in this documentation which do not reflect products which have already been delivered and which will not be implemented on these machines.

Technical data, dimensions and weights are given as an indication only. Responsibility for errors or omissions not accepted.

No reproduction or translation of this publication, in whole or part, without the written consent of KRAMER-WERKE GmbH.

All rights under the provision of the Copyright Act are reserved.
Kramer-Werke GmbH
Nussdorfer Str. 50
D-88662 Überlingen
Germany



kramerALLRAD®

Kramer-Werke GmbH
Nussdorfer Str. 50
D-88662 Überlingen
Tel. +49 (0) 7551 802-0
Fax +49 (0) 7551 802-260
E-mail info@kramer.de
www.neusonkramer.com

Neuson Baumaschinen GmbH
Haidfeldstrasse 37
A-4060 Linz-Leonding
Tel. +43 (0) 732 90590-0
Fax +43 (0) 732 90590-200
E-mail office@neuson.com
www.neusonkramer.com

Neuson Ltd.
Crown Business Park
Dukestown, Tredegar
Gwent. NP22 4EF
United Kingdom
Tel. +44 (0) 1495 723083
Fax +44 (0) 1495 713941
E-mail ukoffice@neuson.com
www.neusonkramer.com

Order no. 1000104011