# Ersatzteilliste

## Spare parts list
## Catalogue de pièces détachées

Radlader

Wheel loader

Chargeuse

950




| | |
|---|---|
| **Fahrzeugtyp**<br>Vehicle model<br>Véhicule modèle | **347-01** |
| **Ab Fahrgestell-Nr.**<br>Valid from serial no.<br>Valable à partir de no. de série | **347 01 0001** |
| **Ausgabe**<br>Edition<br>Edition | **1.3** |
| **Best. Nummer**<br>Spare part no.<br>No. de pièce détachée | **1000142523** |

**Ausgabenlegendel**

| Ausgabe | herausgegeben |
|---|---|
| 1.0 | 06/2005 |
| 1.1 | 03/2006 |
| 1.2 | 01/2007 |
| 1.3 | 07/2007 |

© Copyright – 2007 Kramer-Werke GmbH, Überlingen
Printed in the Federal Republic of Germany
Alle Rechte vorbehalten

Diese Druckschrift darf vom Empfänger nur für den vorgesehenen Zweck verwendet werden. Sie darf ohne vorherige schriftliche Zustimmung in keiner Weise ganz oder teilweise vervielfältigt oder in irgendeine andere Sprache übersetzt werden.

Das Titelbild zeigt den Kramer Allrad 950. Die Abbildung kann Sonderausrüstungen aufweisen.

Kramer-Werke GmbH
Nußdorfer Straße 50
D-88662 Überlingen

Service

Tel. +49 (0) 7551 802-450

Fax +49 (0) 7551 802-138

E-mail info@kramer.de

www.neusonkramer.com

Druckschrift: ET 347-01
Bestell-Nr.: 1000142523
Ausgabe 1.3

**Legend**

| Edition | issued |
|---|---|
| 1.0 | 06/2005 |
| 1.1 | 03/2006 |
| 1.2 | 01/2007 |
| 1.3 | 07/2007 |

© Copyright – 2007 Kramer-Werke GmbH, Überlingen
Printed in the Federal Republic of Germany All rights reserved

No part of this publication may be reproduced, translated or used in any form or by any means – graphic, electronic or mechanical including photocopying, recording, taping or information storage or retrieval systems – without prior permission in writing from Kramer-Werke GmbH

The cover features the KramerAllrad 950 wheel loader with possible optional equipment.

Kramer-Werke GmbH
Nußdorfer Straße 50
D-88662 Überlingen, Federal Republic of Germany

Service

Telephone +49 (0) 7551 802-450

Telefax +49 (0) 7551 802-138

E-mail info@kramer.de

www.neusonkramer.com

Document: ET 347-01
Order no.: 1000142523
Edition 1.3

**Légende**

| Edition | publication |
|---|---|
| 1.0 | 06/2005 |
| 1.1 | 03/2006 |
| 1.2 | 01/2007 |
| 1.3 | 07/2007 |

© Copyright – 2007 Kramer-Werke GmbH, Überlingen
Imprimé en République Fédérale d'Allemagne Tous droits réservés

Cet ouvrage ne peut être représenté, reproduit, adapté, traduit, restitué par des systèmes photomécaniques ou tous autres, y compris de mise en mémoire dans des installations de traitement de données – également dans le cas d'une utilisation partielle ou par extraits – qu'avec l'autorisation préalable par écrit de la société Kramer-Werke GmbH.

Illustration en couverture : chargeuse KramerAllrad 950.
L'illustration peut présenter des équipements en option.

Kramer-Werke GmbH
Nußdorfer Straße 50
D-88662 Überlingen, République Fédérale d' Allemagne

Maintenance

Téléphone +49 (0) 7551 802-450

Téléfax +49 (0) 7551 802-138

E-mail info@kramer.de

www.neusonkramer.com

Document : ET 347-01
No. de commande 1000142523
Edition 1.3

# INHALT / CONTENT / SOMMAIRE


TEIL
PART
PARTIE

**A**

ALLGEMEINE INFORMATIONEN
GENERAL INFORMATIONS
INFORMATIONS GENERALES

TEIL
PART
PARTIE

**B**

TEILESUCHLISTE
PARTS NUMBER REFERENCE LIST
LISTE DES RECHERCHE DES PIÈCES

TEIL
PART
PARTIE

# A

# ALLGEMEINE INFORMATIONEN
# GENERAL INFORMATIONS
# INFORMATIONS GÉNÉRALES

# HINWEISE

## 1. KOPFZEILE DER GRAFIK

### 1.1 BEISPIEL

| | | |
|---|---|---|
| **1000106626** | **MOTOR**<br>**ENGINE** | **340-01** |
| | | ③ |
| ① | **MOTEUR** | **A:340010295** |
| | ② | ④ |

### 1.2 ERLÄUTERUNG

① Stücklistennummer

② Bezeichnung

③ Fahrzeugtyp

④ Bemerkung

**A** = Auslaufteil ( bis Fahrgestellnummer)
**E** = Einlaufteil ( ab Fahrgestellnummer)
**V** = Vorne
**H** = Hinten
**R** = Rechts
**L** = Links
**MA** = Materialnummer alt

### 1.3 PIKTOGRAMME IN DER GRAFIK

 Kennzeichen Fahrgestell

 Reparatursatz

 Sicherheitsteil

 Messen

 Dichtungsmittel / Sicherungsmittel

 Dichtsatz

 Teile nicht demontierbar

 Bauteile sind nicht wieder verwendbar

 Drehmoment

# 2. TEXTSEITEN MIT TEILENUMMERN

### 2.1. BEISPIEL

| Pos | Art.-Nr. | Anm. | Q'TY | BEZEICHNUNG | PART NAME | DESIGNATION |
|---|---|---|---|---|---|---|
| 1 | 1000103625 | A: 340010009 | 1,00 ST | UMSCHALTVENTIL | SELECTION VALVE | CLAPET SELECTIF |
| 2 | 1000103628 | E: 340010010 | 1,00 ST | UMSCHALTVENTIL | SELECTION VALVE | CLAPET SELECTIF |
| 3 | 1000123700 | | 2,00 ST | SCHRAUBE | SCREW | VIS |
| 4 | 1000111264 | | 1,00 ST | GERADE VERSCHRAUBUNG | SCREW JOINT | RACCORD VISSE |
| 5 | 1000108533 | | 4,00 ST | GERADE VERSCHRAUBUNG | SCREW JOINT | RACCORD VISSE |
| 6 | 1000107777 | | 2,00 ST | GERADE VERSCHRAUBUNG | SCREW JOINT | RACCORD VISSE |
| ① | ② | ③ | ④ | ⑤ | | |

### 2.2 ERLÄUTERUNG

① Positionsnummer in der Abbildung
② Artikelnummer
③ Anmerkungen (siehe Symbole und Bemerkungen)
④ Anzahl (siehe dazu auch nachstehende Anmerkung)
⑤ Bezeichnung des Artikels

### 2.3 ANMERKUNGEN

Die in der Spalte ④ angeführte Anzahl bezieht sich auf die an dieser Stelle benötigte Anzahl. Falls es sich um ein Einzelteil eines Kompletteils handelt, ist die Anzahl pro Kompletteil oder Zusammenbau gemeint.

### 2.4 BEMERKUNGEN

Die in Spalte ③ angeführten Informationen zeigen, ab welcher Seriennummer das neue Teil gültig ist, bzw. die Positionierung.

**A:** = Auslaufteil ( bis Fahrgestellnummer)
**E:** = Einlaufteil ( ab Fahrgestellnummer)
**V** = Vorne
**H** = Hinten
**R** = Rechts
**L** = Links
**MA** = Materialnummer alt

# 3. BEI BESTELLUNGEN BITTE BEACHTEN

Bitte geben Sie bei der Bestellung von Ersatzteilen bei ihrem Ansprechpartner immer an:

- Gerätetype
- Seriennummer
- Katalogseite
- Positionsnummer
- Bestellnummer

Ihr Ansprechpartner:

Händlerstempel

# 4. ALLGEMEINE HINWEISE

Alle Angaben sind unverbindlich, Änderungen vorbehalten.

© Kramer - Werke GmbH

# INFORMATION

## 1. HEADLINE OF THE DIAGRAM

### 1.1 EXAMPLE

| | | |
|---|---|---|
| **1000106626** | **MOTOR**<br>**ENGINE** | **340-01** |
| ① | **MOTEUR** | **A:340010295** |
| | ② | ④ |

### 1.2 EXPLANATION

① Part list number

② Part name

③ Vehicle model

④ Remarks

**A:** = valid up serial number
**E:** = valid starting serial number
**V** = front
**H** = rear
**R** = right
**L** = left
**MA** = Part number old

### 1.3 PICTOGRAMS IN THE DIAGRAM

 Symbol Chassis

 Repair kit

 Safety-related part

 Measures

 Sealing material / Safety device

 Sealing kit

 Parts not dismantlable

 Construction units may not be used again

 Torque

# INFORMATION

## 2. PART NUMBER REFERNCE LIST

### 2.1. EXAMPLE

| Pos | Art.-Nr. | Anm. | Q'TY | | BEZEICHNUNG | PART NAME | DESIGNATION |
|---|---|---|---|---|---|---|---|
| 1 | 1000103625 | A: 340010009 | 1,00 | ST | UMSCHALTVENTIL | SELECTION VALVE | CLAPET SELECTIF |
| 2 | 1000103628 | E: 340010010 | 1,00 | ST | UMSCHALTVENTIL | SELECTION VALVE | CLAPET SELECTIF |
| 3 | 1000123700 | | 2,00 | ST | SCHRAUBE | SCREW | VIS |
| 4 | 1000111264 | | 1,00 | ST | GERADE VERSCHRAUBUNG | SCREW JOINT | RACCORD VISSE |
| 5 | 1000108533 | | 4,00 | ST | GERADE VERSCHRAUBUNG | SCREW JOINT | RACCORD VISSE |
| 6 | 1000107777 | | 2,00 | ST | GERADE VERSCHRAUBUNG | SCREW JOINT | RACCORD VISSE |
| ① | ② | ③ | ④ | | ⑤ | | |

### 2.2 EXPLANATION

① Illustration reference number
② Part number
③ Remarks (see symbols and notes)
④ quantity required (see note below)
⑤ Part name

### 2.3 NOTES

The quantity shown in column ④ is the quantity required for the particular application that is illustrated. If the parts are components of an assembly, this refers to the quantity in one assembly or sub assembly.

### 2.4 REMARKS

The in column ③ listed information shows, from which serial number the new part is valid or which position.

**A:** = valid up serial number
**E:** = valid starting serial number
**V** = front
**H** = rear
**R** = right
**L** = left
**MA** = Part number old

## 3. ORDERING INSTRUCTIONS

Please pass the order with the following information to your dealer:

- type of vehicle
- serial number
- page
- reference number
- item number

Your dealer:

Dealer stamp

## 4. GENERAL INFORMATION

All information without engagement, amendments free.

© Kramer - Werke GmbH

# INFORMATIONS

## 1. RUBRIQUE DU DIAGRAMME

### 1.1 EXEMPLE

| | | |
|---|---|---|
| **1000106626** | **MOTOR**<br>**ENGINE** | **340-01** |
| | | ③ |
| ① | **MOTEUR** | **A:340010295** |
| | ② | ④ |

### 1.2 EXPLICATIONS

① Numéro de liste de pièces

② Designation

③ Véhicule modèle

④ Remarques

**A :** = jusqu'au numéro de châssis
**E :** = à partir du numéro de châssis
**V** = AV
**H** = AR
**R** = A droite
**L** = A gauche
**MA** = Numéro de matériel vieux

### 1.3 PICTOGRAMMES DAMS LE DIAGRAMME

 Châssis

 Kit de réparation

 Pièce de sécurité

 Mesures

 Moyen d' étanchéité / Liquide de fixation

 Kit d'étanchéité

 Pièces non démontables

 Les éléments ne sont plus utilisables

 Couple de serrage

# INFORMATIONS

## 2. LISTE DES REFERENCES DES PIECES

### 2.1EXEMPLE

| Pos | Art.-Nr. | Anm. | Q'TY | BEZEICHNUNG | PART NAME | DESIGNATION |
|---|---|---|---|---|---|---|
| 1 | 1000103625 | A: 340010009 | 1,00 ST | UMSCHALTVENTIL | SELECTION VALVE | CLAPET SELECTIF |
| 2 | 1000103628 | E: 340010010 | 1,00 ST | UMSCHALTVENTIL | SELECTION VALVE | CLAPET SELECTIF |
| 3 | 1000123700 | | 2,00 ST | SCHRAUBE | SCREW | VIS |
| 4 | 1000111264 | | 1,00 ST | GERADE VERSCHRAUBUNG | SCREW JOINT | RACCORD VISSE |
| 5 | 1000108533 | | 4,00 ST | GERADE VERSCHRAUBUNG | SCREW JOINT | RACCORD VISSE |
| 6 | 1000107777 | | 2,00 ST | GERADE VERSCHRAUBUNG | SCREW JOINT | RACCORD VISSE |
| ① | ② | ③ | ④ | ⑤ | | |

### 2.2 EXPLICATIONS

① Repère de la référence sur l`illustration
② Numéro de pièce
③ Remarques (voir symboles et notes)
④ Quantité (voir note ci-dessous)
⑤ Désignation

### 2.3 NOTES SPECIALES

La quantité indiquée dans la colonne ④ est celle applicable à l`ensemble illustré sur la page adjacente, le nombre indiqué donc la quantité dans l´ensemble en sous-ensemble et ne pas pour la machine complète.

### 2.4 REMARQUES

Les informations énumérées dans l`encadré ③ montrent à partir de quel numéro de série la nouvelle pièce est valable ou sa mise en position.

**A :** = jusqu'au numéro de châssis
**E :** = partir du numéro de châssis
**V** = AV
**H** = AR
**R** = A droite
**L** = A gauche
**MA** = Numéro de matérie vieux

## 3. INSTRUCTIONS POUR LES COMMANDES

Lors des commandes de pièces détachées veuillez s-il vous plait toujours signaler à votre partenaire:

- type de machines
- numéro de série
- pages du catalogue
- numéro de position
- le numéro de commande

Votre interlocuteur:

tampon pour concessionaire

## 4. INFORMATIONS GENERALES

Toutes les informations sont sans engagement, changements sous réserve.

© Kramer - Werke GmbH

TEIL
PART
PARTIE

# B

# TEILESUCHLISTE
# PARTS NUMBER REFERENCE LIST
# LISTE DE RECHERCHE DES PIÈCES

## INHALT / CONTENT / SOMMAIRE


| BEZEICHNUNG<br>PART NAME<br>DESIGNATION | SEITE<br>PAGE<br>PAGE |
|---|---|
| **Wartung**<br>**MAINTENANCE**<br>**MAINTENANCE** | |
| WARTUNGSSATZ<br>MAINTENANCE KIT<br>KIT DE MAINTENANCE | **01/10** |
| SCHELLE<br>CLAMP<br>BRIDE | **01/20** |
| **Motor**<br>**ENGINE**<br>**MOTEUR** | |
| MOTORLAGERUNG<br>ENGINE BEDDING<br>SUSPENSION DU MOTEUR | **02/10** |
| ZYLINDERKOPF<br>CYLINDER HEAD<br>CULASSE | **02/20** |
| MOTORBLOCK<br>ENGINE BLOCK<br>BLOC-MOTEUR | **02/30** |
| SCHMIEROEL<br>LUBRICATING OIL<br>HUILE DE GRAISSAGE | **02/40** |
| SCHMIEROEL<br>LUBRICATING OIL<br>HUILE DE GRAISSAGE | **02/50** |
| EINSPRITZUNG<br>INJECTION<br>INJECTION | **02/60** |
| EINSPRITZUNG<br>INJECTION<br>INJECTION | **02/70** |
| EINSPRITZUNG<br>INJECTION<br>INJECTION | **02/80** |
| MOTOR ANBAUTEILE<br>ENGINE ATTACHMENTS PARTS<br>ACCESSOIRES MOTEUR | **02/90** |
| MOTOR ANBAUTEILE<br>ENGINE ATTACHMENTS PARTS<br>ACCESSOIRES MOTEUR | **02/100** |
| ANSAUGANLAGE<br>INDUCTION SYSTEM<br>SYSTÈME D'ADMISSION | **02/110** |
| ABGASANLAGE<br>EXHAUST SYSTEM<br>SYSTÈME D'ÉCHAPPEMENT | **02/120** |
| KRAFTSTOFF<br>FUEL<br>COMBUSTIBLE | **02/130** |
| GASREGULIERUNG<br>SPEED REGULATION<br>RÈGLEMENT DE GAZ | **02/140** |
| HANDGAS<br>MANNUAL THROTTLE ATTACHMENT<br>ACCÉLÉRATEUR Á MAIN FIXATION | **02/150** |
| **Kühlung**<br>**COOLING**<br>**ÊTRE RAFRAÎCHI** | |
| KÜHLUNG<br>COOLING<br>REFROIDISSEMENT | **03/10** |
| **Antriebseinheiten**<br>**DRIVE UNIT**<br>**UNITÉ D'ENTRAÎNEMENT** | |
| KREISLAUF<br>CIRCULATION<br>CIRCULATION | **04/10** |
| ANTRIEBSEINHEIT<br>DRIVE UNIT<br>UNITÉ D'ENTRAÎNEMENT | **04/20** |
| HYDRAULIKPUMPE<br>HYDRAULIC PUMP<br>POMPE HYDRAULIQUE | **04/30** |
| HYDRAULIKPUMPE<br>HYDRAULIC PUMP<br>POMPE HYDRAULIQUE | **04/40** |
| HYDRAULIKMOTOR<br>HYDRAULIC MOTOR<br>MOTEUR HYDRAULIQUE | **04/50** |
| HYDRAULIKMOTOR<br>HYDRAULIC MOTOR<br>MOTEUR HYDRAULIQUE | **04/60** |
| HYDRAULIKMOTOR<br>HYDRAULIC MOTOR<br>MOTEUR HYDRAULIQUE | **04/70** |
| **Achsen**<br>**AXLES**<br>**ESSIEUX** | |
| ACHSEN-BEFESTIGUNG<br>AXLE ATTACHMENT<br>FIXATION D'AXE | **05/10** |
| VORDERACHSE<br>FRONT AXLE<br>AVANT-TRAIN | **05/20** |
| VORDERACHSE<br>FRONT AXLE<br>AVANT-TRAIN | **05/30** |

## INHALT / CONTENT / SOMMAIRE


| BEZEICHNUNG<br>PART NAME<br>DESIGNATION | SEITE<br>PAGE<br>PAGE |
|---|---|
| HINTERACHSE<br>REAR AXLE<br>ESSIEU ARRIÈRE | **05/40** |
| HINTERACHSE<br>REAR AXLE<br>ESSIEU ARRIÈRE | **05/50** |
| DIFFERENTIAL<br>DIFFERENTIAL<br>DIFFERENTIEL | **05/60** |
| DIFFERENTIAL<br>DIFFERENTIAL<br>DIFFERENTIEL | **05/70** |
| DIFFERENTIAL<br>DIFFERENTIAL<br>DIFFERENTIEL | **05/80** |
| DIFFERENTIAL<br>DIFFERENTIAL<br>DIFFERENTIEL | **05/90** |
| GETRIEBE<br>GEAR BOX<br>BOÎTE DE VITESSES | **05/100** |
| GETRIEBE<br>GEAR BOX<br>BOÎTE DE VITESSES | **05/110** |
| LENKZYLINDER<br>STEERING CYLINDER<br>CYLINDRE DE DIRECTION | **05/120** |
| DIFFERENTIALSPERRE<br>DIFFERENTIAL STOP<br>ARRÊT DIFFÉRENTIEL | **05/130** |
| **Bremsanlage**<br>**BRAKE ASSEMBLY**<br>**SYSTÈME DE FREINAGE** | |
| BETRIEBSBREMSE<br>SERVICE BRAKE<br>FREIN M DE SERVICE | **06/10** |
| BREMSPEDAL<br>BRAKE PEDAL<br>PÉDALE DE FREIN | **06/20** |
| FESTSTELLBREMSE<br>PARKING BRAKE<br>FREIN DE STATIONNEMENT | **06/30** |
| **Lenkung**<br>**STEERING UNIT**<br>**DIRECTION** | |
| LENKUNG<br>STEERING UNIT<br>DIRECTION | **07/10** |
| **Arbeitshydraulik**<br>**WORKING HYDRAULIC**<br>**HYDRAULIQUE DE TRAVAIL** | |
| KREISLAUF<br>CIRCULATION<br>CIRCULATION | **08/10** |
| KREISLAUF<br>CIRCULATION<br>CIRCULATION | **08/20** |
| 3. STEUERKREIS<br>AUXILIARY CONTROL CIRCUIT<br>CIRCUIT DE COMMANDE D'ADDITIF | **08/30** |
| ÖLBEHÄLTER<br>OIL TANK<br>RÉSERVOIR D'HUILE | **08/40** |
| STEUERGERÄT<br>DISTRIBUTOR<br>APPAREIL DE COMMANDE | **08/50** |
| STEUERGERÄT<br>DISTRIBUTOR<br>APPAREIL DE COMMANDE | **08/60** |
| HUBZYLINDER<br>LIFT CYLINDER<br>CYLINDRE DE LEVAGE | **08/70** |
| KIPPZYLINDER<br>TILT RAM<br>CYLINDRE BASCULANT | **08/80** |
| ROHRBRUCHSICHERUNG<br>HOSE BURST VALVE<br>SOUPAPE DE RUPTURE | **08/90** |
| ROHRBRUCHSICHERUNG<br>HOSE BURST VALVE<br>SOUPAPE DE RUPTURE | **08/100** |
| LASTSTABILISATOR<br>LOAD STABILIZER<br>STABILISATEUR DE CHARGE | **08/110** |
| RÜCKLAUFLEITUNG<br>REFLUX LINE<br>CANALISATION DE RETOUR | **08/120** |
| **Elektrische Anlage**<br>**ELECTRIC**<br>**ÉQUIPEMENT ÉLECTRIQUE** | |
| ARMATURENBRETT<br>INSTRUMENT PANEL<br>TABLEAU DE BORD | **09/10** |
| ARMATURENBRETT<br>INSTRUMENT PANEL<br>TABLEAU DE BORD | **09/20** |
| FAHRZEUGBELEUCHTUNG<br>LIGHTING<br>ÉCLAIRAGE | **09/30** |

## INHALT / CONTENT / SOMMAIRE


| BEZEICHNUNG<br>PART NAME<br>DESIGNATION | SEITE<br>PAGE<br>PAGE |
|---|---|
| BATTERIE-BATTERIEKABEL<br>BATTERY - BATTERY CABLE<br>CÂBLE DE BATTERIE - BATTERIE | **09/40** |
| VORWÄRMUNG<br>PREHEATER<br>PRÉCHAUFFAGE | **09/50** |
| VORWÄRMUNG<br>PREHEATER<br>PRÉCHAUFFAGE | **09/60** |
| KRAFTSTOFFVORWÄRMUNG<br>FUEL PREHEATING<br>PRÉCHAUFFAGE DU CARBURANT | **09/70** |
| HAUPTKABELBAUM<br>MAIN HAIRNESS<br>ARBRE DE CÂBLE PRINCIPAL | **09/80** |
| HAUPTKABELBAUM<br>MAIN HAIRNESS<br>ARBRE DE CÂBLE PRINCIPAL | **09/90** |
| KABINENKABELBAUM<br>WIRING HARNESS<br>ARBRE DE CÂBLE | **09/100** |
| KABINENKABELBAUM<br>WIRING HARNESS<br>ARBRE DE CÂBLE | **09/110** |
| KABINENKABELBAUM<br>WIRING HARNESS<br>ARBRE DE CÂBLE | **09/120** |
| KABELBAUM<br>WIRING HARNESS<br>ARBRE DE CÂBLE | **09/130** |
| KENNZEICHENBELEUCHTUNG<br>NUMBERPLATE LIGHT BG<br>ECLAIRAGE DE LA PLAQUE MINÉRALOGIQUE BG | **09/140** |
| STVZO SONDERSCHAUFELN<br>SPECIAL LOADING BUCKET<br>PELLES SPÉCIALES DE CHARGEMENT | **09/150** |
| KABELBAUM<br>WIRING HARNESS<br>ARBRE DE CÂBLE | **09/160** |
| **Ketten / Räder**<br>**CHAIN/WHEELS**<br>**CHAÎNE/ROUE** | |
| RÄDER<br>WHEELS<br>ROUE | **10/10** |
| **Fahrwerk / Rahmen**<br>**CHASSIS / FRAMEWORK**<br>**CHÂSSIS / CADRE** | |
| RAHMEN<br>FRAME<br>CADRE | **11/10** |
| RAHMEN<br>FRAME<br>CADRE | **11/20** |
| **Verkleidungen**<br>**TRIM**<br>**RÉVÊTEMENT** | |
| VERKLEIDUNG<br>TRIM<br>RÉVÊTEMENT | **12/10** |
| VERKLEIDUNG<br>TRIM<br>RÉVÊTEMENT | **12/20** |
| **Ladeanlage / Armsystem**<br>**LOADING SYSTEM/ARMSYSTEM**<br>**SYSTÈME DE CHARGE/FLECHE ET BALANCIER** | |
| LADEANLAGE<br>LOADER UNIT<br>EQUIPEMENT CHARGEUR | **13/10** |
| SCHNELLWECHSELPLATTE<br>QUICKHITCH FACILITY KPL.<br>DISP. ATTACHE RAPIDE KPL. | **13/20** |
| **Fahrerkabine, Fahrersitz**<br>**CABINE/DRIVERS SEAT**<br>**CABINE/SIÈGE DE CHAUFFEUR** | |
| KABINE<br>CAB<br>CABINE | **14/10** |
| KABINE EINZELTEILE<br>CAB OF INDIVIDUAL PARTS<br>CABINE D'ÉLÉMENTS | **14/20** |
| KABINENTÜR<br>CAB DOOR<br>PORTE DE CABINE | **14/30** |
| VERKLEIDUNG<br>TRIM<br>RÉVÊTEMENT | **14/40** |
| FAHRERSITZ<br>DRIVERS SEAT<br>SIÈGE DE CHAUFFEUR | **14/50** |
| FAHRERSITZ UNTERTEIL<br>DRIVER SEAT LOWER PART<br>SIÈGE DU CONDUCTEUR PARTIE INFÉRIEURE | **14/60** |
| FAHRERSITZ-BEFESTIGUNG<br>OPERATOR'S SEAT ATTACHMENT<br>SIÈGE DU CONDUCTEUR FIXATION | **14/70** |
| FAHRERSITZ OBERTEIL<br>SEAT UPPER PART<br>SIÈGE DU CONDUCTEUR EN HAUT | **14/80** |

## INHALT / CONTENT / SOMMAIRE


| BEZEICHNUNG<br>PART NAME<br>DESIGNATION | SEITE<br>PAGE<br>PAGE |
|---|---|
| SITZUNTERTEIL<br>SEAT UNDER PART<br>SOUS-PART DE SIÈGE | **14/90** |
| FAHRERSITZ COMFORT<br>DRIVER'S SEAT COMFORT<br>SIÈGE DU CONDUCTEUR COMFORT | **14/100** |
| SITZUNTERTEIL LUFTGEFEDERT<br>LOWER PART, AIR-SEAT<br>UNE PARTIE PLUS INFÉRIEURE, AIR-SIÈGE | **14/110** |
| **Heizung, Klimaanlage<br>HEATING/AIR CONDITION SYSTEM<br>CHAUFFAGE/CLIMATISEUR** | |
| HEIZUNG<br>HEATING<br>CHAUFFAGE | **15/10** |
| **Aufkleber, Werkzeug<br>STICKER, TOOLS<br>AUTOCOLLANT, OUTIL** | |
| AUFKLEBER<br>STICKER<br>AUTOCOLLANT | **16/10** |
| WERKZEUG/DOKUMENTE<br>TOOLS/DOCUMENTS<br>OUTIL/DOCUMENTS | **16/20** |
| WERKZEUG/DOKUMENTE<br>TOOLS/DOCUMENTS<br>OUTIL/DOCUMENTS | **16/30** |
| **Anbaugeräte<br>IMPLEMENTS TO ATTACH<br>APPAREILS PORTÉS** | |
| LADESCHAUFELN<br>LOADING BUCKET<br>GODET DE CHARGEMENT | **17/10** |
| SCHAUFELN<br>BUCKETS<br>GODETS | **17/20** |
| GREIFERSCHAUFE<br>MULTIPURPOSE BUCKET<br>POLY-GODET | **17/30** |
| GREIFERSCHAUFEL-HYDRAULIK<br>MULTY PURPOSE BUCKET HYDRAULIC<br>POLY GODET HYDRAULIQUE | **17/40** |
| ZYLINDER<br>CYLINDER<br>CYLINDRE | **17/50** |
| STAPELEINRICHTUNG<br>PALLET FORKS<br>PORTE-PALETTE | **17/60** |
| ARBEITSPLATTFORM<br>MAN-CARRYING PLATFORM<br>PLATE-FORME DE TRAVAIL | **17/70** |
| ANBAUTEILE ARBEITSPLATTFORM<br>ADD-ON PIECES MAN-CARRYING PLATFORM<br>PIÈCES À AJOUTER - PLATEFORME DE TRAVAIL | **17/80** |

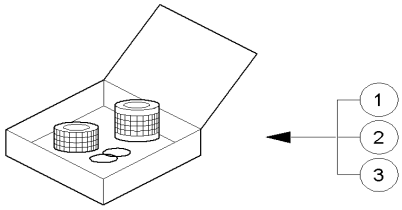


1000147752.iso

| Pos | Art.-Nr. | Anm. | Q'TY | BEZEICHNUNG | PART NAME | DESIGNATION |
|---|---|---|---|---|---|---|
| 1 | 1000143509 | | 1,00 ST | WARTUNGSSATZ | MAINTENANCE KIT | KIT DE MAINTENANCE |
| 2 | 1000109144 | | 1,00 ST | WARTUNGSSATZ | MAINTENANCE KIT | KIT DE MAINTENANCE |
| 3 | 1000147755 | | 1,00 ST | WARTUNGSSATZ | MAINTENANCE KIT | KIT DE MAINTENANCE |

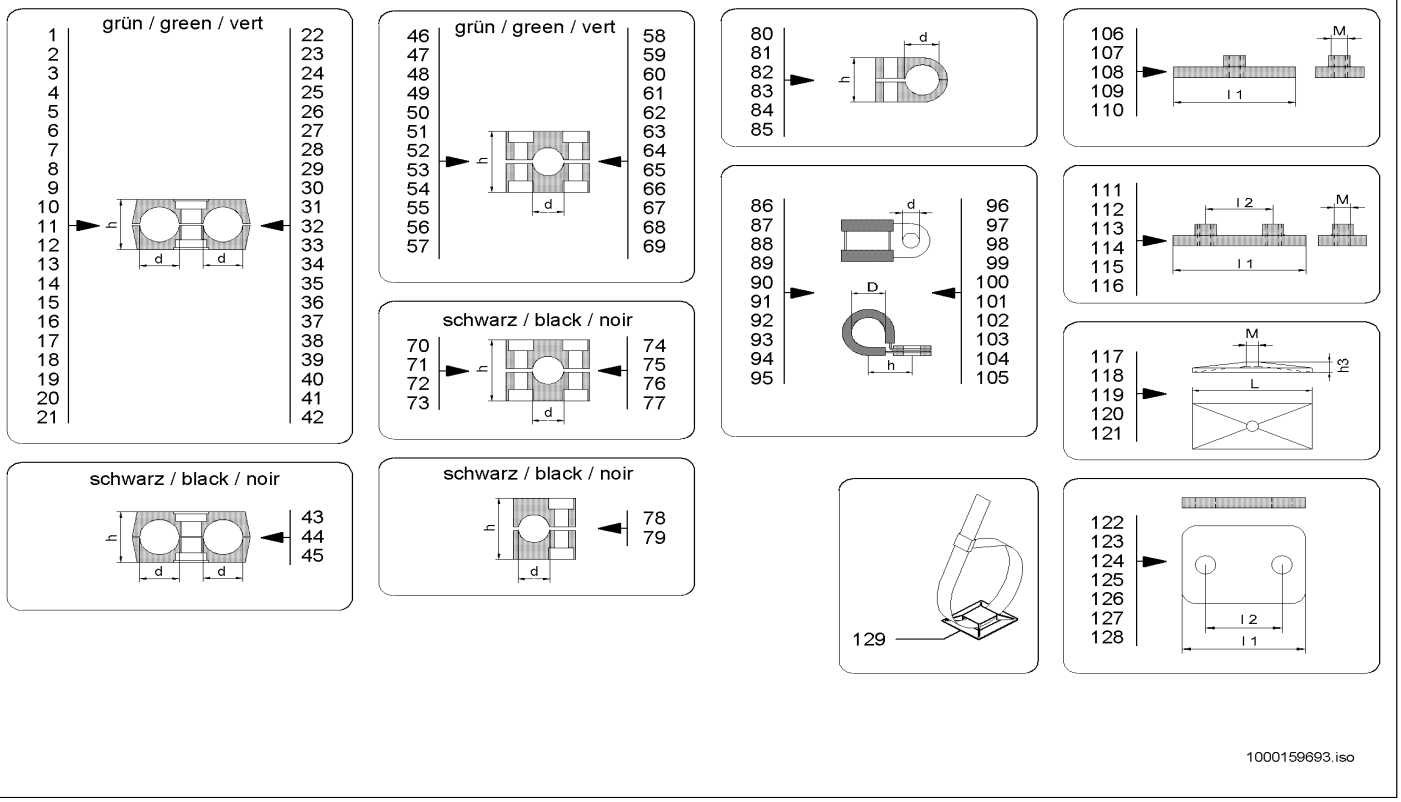


| Pos | Art.-Nr. | Anm. | Q'TY | BEZEICHNUNG | PART NAME | DESIGNATION |
|---|---|---|---|---|---|---|
| 1 | 1000031971 | d=6,0/6,0 h=27,0 | 1,00 ST | SCHELLE | CLAMP | BRIDE |
| 2 | 1000052647 | d=10,0/10,0 h=27,0 | 1,00 ST | SCHELLE | CLAMP | BRIDE |
| 3 | 1000031460 | d=12,0/12,0 h=27,0 | 1,00 ST | SCHELLE | CLAMP | BRIDE |
| 4 | 1000031275 | d=12,7/12,7 h=26,0 | 1,00 ST | SCHELLE | CLAMP | BRIDE |
| 5 | 1000031992 | d=14,0/14,0 h=26,0 | 1,00 ST | SCHELLE | CLAMP | BRIDE |
| 6 | 1000031999 | d=15,0/15,0 h=26,0 | 1,00 ST | SCHELLE | CLAMP | BRIDE |
| 7 | 1000031626 | d=18,0/18,0 h=26,0 | 1,00 ST | SCHELLE | CLAMP | BRIDE |
| 8 | 1000031638 | d=20,0/20,0 h=37,0 | 1,00 ST | SCHELLE | CLAMP | BRIDE |
| 9 | 1000032038 | d=21,3/21,3 h=37,0 | 1,00 ST | SCHELLE | CLAMP | BRIDE |
| 10 | 1000032006 | d=22,0/22,0 h=37,0 | 1,00 ST | SCHELLE | CLAMP | BRIDE |
| 11 | 1000124488 | d=24,0/24,0 h=37,0 | 1,00 ST | SCHELLE | CLAMP | BRIDE |
| 12 | 1000031949 | d=25,0/25,0 h=37,0 | 1,00 ST | SCHELLE | CLAMP | BRIDE |
| 13 | 1000031965 | d=25,0/25,0 h=42,0 | 1,00 ST | SCHELLE | CLAMP | BRIDE |
| 14 | 1000031852 | d=28,0/28,0 h=42,0 | 1,00 ST | SCHELLE | CLAMP | BRIDE |
| 15 | 1000032018 | d=30,0/30,0 h=42,0 | 1,00 ST | SCHELLE | CLAMP | BRIDE |
| 16 | 1000031330 | d=6,0/8,0 h=27,0 | 1,00 ST | SCHELLE | CLAMP | BRIDE |
| 17 | 1000031347 | d=8,0/12,7 h=26,0 | 1,00 ST | SCHELLE | CLAMP | BRIDE |
| 18 | 1000032105 | d=10,0/14,0 h=26,0 | 1,00 ST | SCHELLE | CLAMP | BRIDE |
| 19 | 1000052646 | d=12,0/15,0 h=26,0 | 1,00 ST | SCHELLE | CLAMP | BRIDE |
| 20 | 1000031310 | d=12,7/18,0 h=26,0 | 1,00 ST | SCHELLE | CLAMP | BRIDE |
| 21 | 1000100564 | d=13,5/15,0 h=26,0 | 1,00 ST | SCHELLE | CLAMP | BRIDE |
| 22 | 1000031749 | d=15,0/18,0 h=26,0 | 1,00 ST | SCHELLE | CLAMP | BRIDE |
| 23 | 1000126725 | d=15,0/20,0 h=26,0 | 1,00 ST | SCHELLE | CLAMP | BRIDE |
| 24 | 1000031295 | d=15,0/23,0 h=37,0 | 1,00 ST | SCHELLE | CLAMP | BRIDE |
| 25 | 1000107458 | d=18,0/20,0 h=37,0 | 1,00 ST | SCHELLE | CLAMP | BRIDE |
| 26 | 1000031709 | d=18,0/22,0 h=37,0 | 1,00 ST | SCHELLE | CLAMP | BRIDE |
| 27 | 1000031271 | d=18,0/24,0 h=37,0 | 1,00 ST | SCHELLE | CLAMP | BRIDE |
| 28 | 1000101262 | d=20,0/24,0 h=37,0 | 1,00 ST | SCHELLE | CLAMP | BRIDE |
| 29 | 1000031480 | d=20,0/25,0 h=37,0 | 1,00 ST | SCHELLE | CLAMP | BRIDE |
| 30 | 1000031972 | d=20,0/28,0 h=42,0 | 1,00 ST | SCHELLE | CLAMP | BRIDE |
| 31 | 1000031154 | d=22,0/28,0 h=42,0 | 1,00 ST | SCHELLE | CLAMP | BRIDE |
| 32 | 1000151968 | d=26,9/30,0 h=42,0 | 1,00 ST | SCHELLE | CLAMP | BRIDE |
| 33 | 1000052643 | d=24,0/38,0 h=56,0 | 1,00 ST | SCHELLE | CLAMP | BRIDE |
| 34 | 1000100563 | d=25,0/35,0 h=56,0 | 1,00 ST | SCHELLE | CLAMP | BRIDE |
| 35 | 1000125965 | d=30,0/35,0 h=56,0 | 1,00 ST | SCHELLE | CLAMP | BRIDE |
| 36 | 1000032230 | d=25,0/20,0 h=37,0 | 1,00 ST | SCHELLE | CLAMP | BRIDE |
| 37 | 1000031762 | d=28,0/28,0 h=42,0 | 1,00 ST | SCHELLE | CLAMP | BRIDE |
| 38 | 1000100565 | d=32,0/32,0 h=54,0 | 1,00 ST | DOPPELSCHELLE | DOUBLE CLAMP | DOUBLE BRIDE |
| 39 | 1000032359 | d=35,0/35,0 h=54,0 | 1,00 ST | SCHELLE | CLAMP | BRIDE |
| 40 | 1000031536 | d=15,0/25,0 h=37,0 | 1,00 ST | SCHELLE | CLAMP | BRIDE |
| 41 | 1000031780 | d=18,0/20,0 h=37,0 | 1,00 ST | SCHELLE | CLAMP | BRIDE |
| 42 | 1000032373 | d=20,0/25,0 h=37,0 | 1,00 ST | SCHELLE | CLAMP | BRIDE |
| 43 | 1000098705 | d=17,2/17,2 h=26,0 | 1,00 ST | SCHELLE | CLAMP | BRIDE |
| 44 | 1000098706 | d=20,0/20,0 h=37,0 | 1,00 ST | SCHELLE | CLAMP | BRIDE |
| 45 | 1000032037 | d=15,0/15,0 h=26,0 | 1,00 ST | SCHELLE | CLAMP | BRIDE |
| 46 | 1000031251 | d=10,0 h=27,0 | 1,00 ST | SCHELLE | CLAMP | BRIDE |

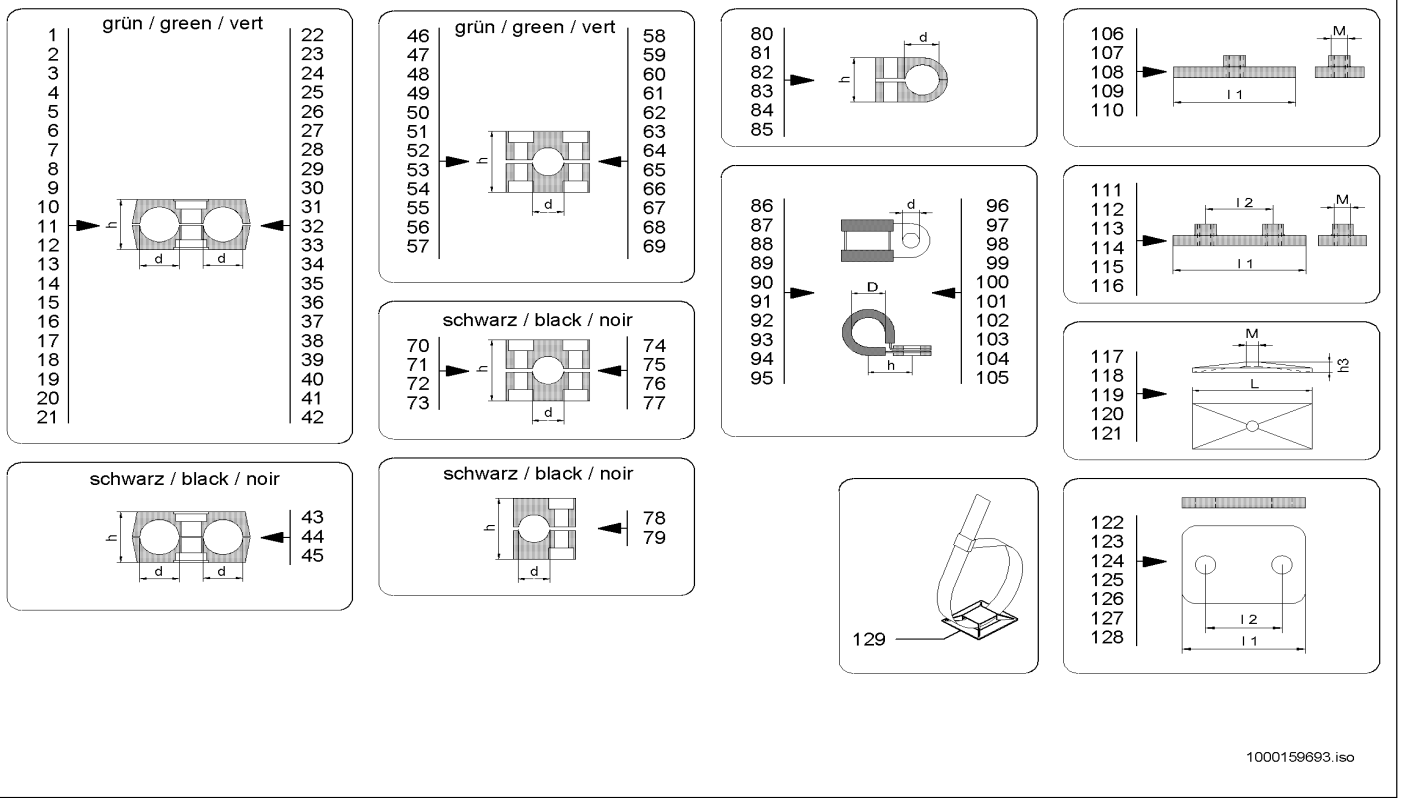


1000159693.iso

| Pos | Art.-Nr. | Anm. | Q'TY | BEZEICHNUNG | PART NAME | DESIGNATION |
|---|---|---|---|---|---|---|
| 47 | 1000032173 | d=12,0 h=27,0 | 1,00 ST | SCHELLE | CLAMP | BRIDE |
| 48 | 1000031602 | d=15,0 h=33,0 | 1,00 ST | SCHELLE | CLAMP | BRIDE |
| 49 | 1000130181 | d=16,0 h=33,0 | 1,00 ST | SCHELLE | CLAMP | BRIDE |
| 50 | 1000031502 | d=18,0 h=33,0 | 1,00 ST | SCHELLE | CLAMP | BRIDE |
| 51 | 1000032060 | d=22,0 h=36,0 | 1,00 ST | SCHELLE | CLAMP | BRIDE |
| 52 | 1000032326 | d=25,0 h=36,0 | 1,00 ST | SCHELLE | CLAMP | BRIDE |
| 53 | 1000141576 | d=26,9 h=42,0 | 1,00 ST | SCHELLE | CLAMP | BRIDE |
| 54 | 1000031124 | d=28,0 h=42,0 | 1,00 ST | SCHELLE | CLAMP | BRIDE |
| 55 | 1000133090 | d=30,0 h=42,0 | 1,00 ST | SCHELLE | CLAMP | BRIDE |
| 56 | 1000146986 | d=35,0 h=58,0 | 1,00 ST | SCHELLE | CLAMP | BRIDE |
| 57 | 1000125254 | d=40,0 h=58,0 | 1,00 ST | SCHELLE | CLAMP | BRIDE |
| 58 | 1000127099 | d=40,0 h=60,0 | 1,00 ST | SCHELLE | CLAMP | BRIDE |
| 59 | 1000031591 | d=20,0 h=35,5 | 1,00 ST | SCHELLE | CLAMP | BRIDE |
| 60 | 1000100476 | d=22,0 h=35,5 | 1,00 ST | SCHELLE | CLAMP | BRIDE |
| 61 | 1000031365 | d=23,0 h=35,5 | 1,00 ST | SCHELLE | CLAMP | BRIDE |
| 62 | 1000031517 | d=25,0 h=35,5 | 1,00 ST | SCHELLE | CLAMP | BRIDE |
| 63 | 1000142048 | d=28,0h=41,5 | 1,00 ST | SCHELLE | CLAMP | BRIDE |
| 64 | 1000108255 | d=30,0 h=41,5 | 1,00 ST | SCHELLE | CLAMP | BRIDE |
| 65 | 1000106102 | d=35,0 h=60,0 | 1,00 ST | SCHELLE | CLAMP | BRIDE |
| 66 | 1000032250 | d=35,0 h=58,0 | 1,00 ST | SCHELLE | CLAMP | BRIDE |
| 67 | 1000031201 | d=38,0 h=58,0 | 1,00 ST | SCHELLE | CLAMP | BRIDE |
| 68 | 1000125966 | d=60,3 h=93,0 | 1,00 ST | SCHELLE | CLAMP | BRIDE |
| 69 | 1000126012 | d= 60,5 h093,0 | 1,00 ST | SCHELLE | CLAMP | BRIDE |
| 70 | 1000098704 | d=17,2 h=32,0 | 1,00 ST | SCHELLE | CLAMP | BRIDE |
| 71 | 1000098985 | d=20,0 h=35,5 | 1,00 ST | SCHELLE | CLAMP | BRIDE |
| 72 | 1000032407 | d=22,0 h=35,5 | 1,00 ST | SCHELLE | CLAMP | BRIDE |
| 73 | 1000032051 | d=15,0 h=33,0 | 1,00 ST | SCHELLE | CLAMP | BRIDE |
| 74 | 1000032192 | d=20,0 h=36,0 | 1,00 ST | SCHELLE | CLAMP | BRIDE |
| 75 | 1000032127 | d=22,0 h=36,0 | 1,00 ST | SCHELLE | CLAMP | BRIDE |
| 76 | 1000032383 | d=25,0 h=36,0 | 1,00 ST | SCHELLE | CLAMP | BRIDE |
| 77 | 1000031603 | d=25,4 h=36,0 | 1,00 ST | SCHELLE | CLAMP | BRIDE |
| 78 | 1000052645 | d=10,0 h=27,0 | 1,00 ST | SCHELLE | CLAMP | BRIDE |
| 79 | 1000052644 | d=12,0 h=27,0 | 1,00 ST | SCHELLE | CLAMP | BRIDE |
| 80 | 1000032397 | d=6,0 h=13,5 | 1,00 ST | SCHELLE | CLAMP | BRIDE |
| 81 | 1000031326 | d=8,0 h=13,5 | 1,00 ST | SCHELLE | CLAMP | BRIDE |
| 82 | 1000100561 | d=10,0 h=18,5 | 1,00 ST | SCHELLE | CLAMP | BRIDE |
| 83 | 1000032074 | d=14,0 h=23,5 | 1,00 ST | SCHELLE | CLAMP | BRIDE |
| 84 | 1000113510 | d=15,0 h=23,5 | 1,00 ST | SCHELLE | CLAMP | BRIDE |
| 85 | 1000032061 | d=17,2 h=30,5 | 1,00 ST | SCHELLE | CLAMP | BRIDE |
| 86 | 1000032394 | D=6 d=5,2 h=11 | 1,00 ST | SCHELLE | CLAMP | BRIDE |
| 87 | 1000032136 | D=8 d=5,2 h=12 | 1,00 ST | SCHELLE | CLAMP | BRIDE |
| 88 | 1000031197 | D=8 d=6,4 h=15,2 | 1,00 ST | SCHELLE | CLAMP | BRIDE |
| 89 | 1000052660 | D=10 d=6,4 h=15 | 1,00 ST | ROHRSCHELLE | PIPE CLAMP | COLLIER DE TUYAU |
| 90 | 1000031155 | D=12 d=8,4 h=20,5 | 1,00 ST | SCHELLE | CLAMP | BRIDE |
| 91 | 1000032218 | D=15 d=6,4 h=19 | 1,00 ST | SCHELLE | CLAMP | BRIDE |
| 92 | 1000032103 | D=15 d=8,4 h=22 | 1,00 ST | SCHELLE | CLAMP | BRIDE |
| 93 | 1000107382 | D=18 d=6,4 h=20,2 | 1,00 ST | SCHELLE | CLAMP | BRIDE |

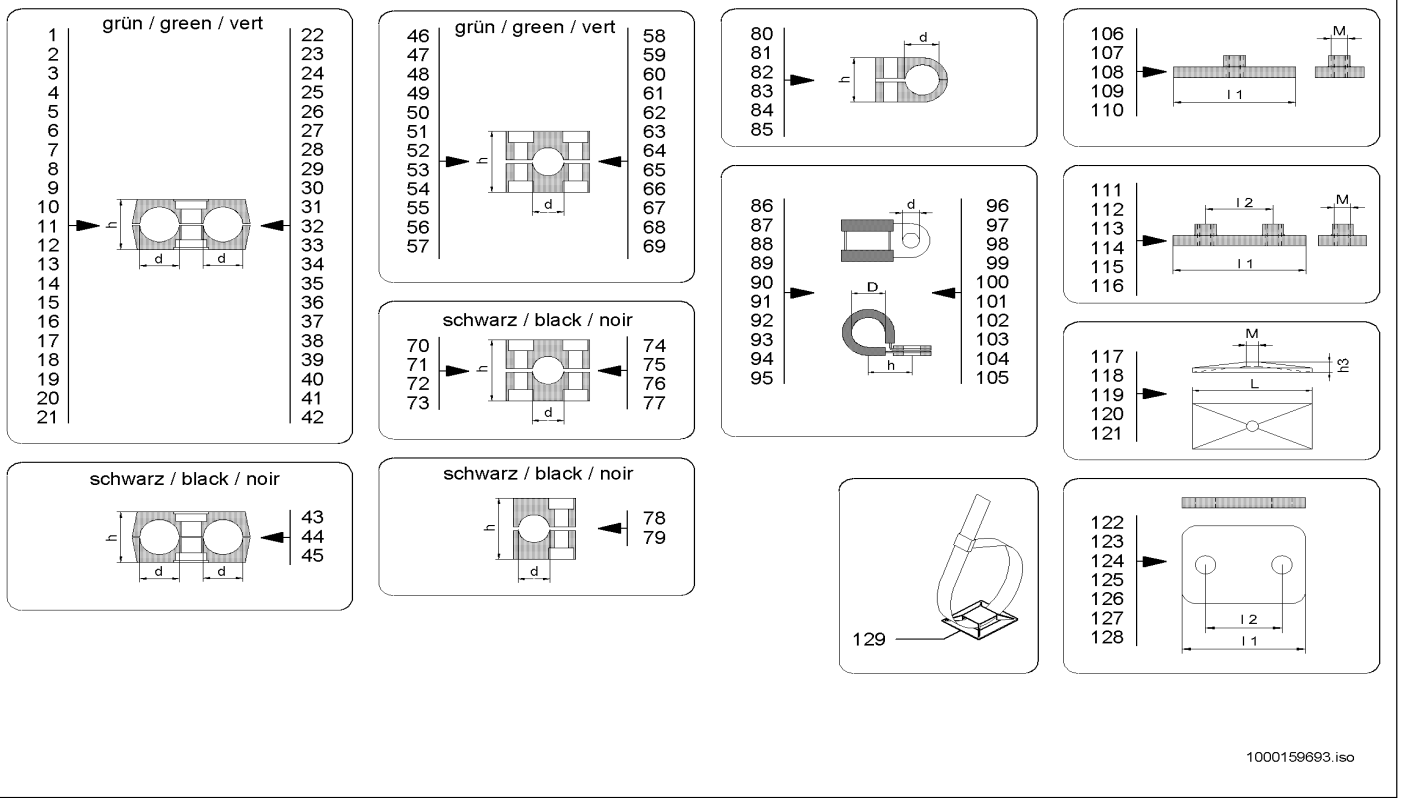


1000159693.iso

| Pos | Art.-Nr. | Anm. | Q'TY | BEZEICHNUNG | PART NAME | DESIGNATION |
|---|---|---|---|---|---|---|
| 94 | 1000032190 | D=20 d=10,4 h=27,5 | 1,00 ST | SCHELLE | CLAMP | BRIDE |
| 95 | 1000100479 | D=22 d=6,4 h=22,2 | 1,00 ST | SCHELLE | CLAMP | BRIDE |
| 96 | 1000031425 | D=22 d=10,4 h=28,5 | 1,00 ST | SCHELLE | CLAMP | BRIDE |
| 97 | 1000032017 | D=25 d=10,4 h=28,5 | 1,00 ST | SCHELLE | CLAMP | BRIDE |
| 98 | 1000031691 | D=28 d=8,4 h=28,5 | 1,00 ST | SCHELLE | CLAMP | BRIDE |
| 99 | 1000031926 | D=30 d=10,4 h=32,5 | 1,00 ST | SCHELLE | CLAMP | BRIDE |
| 100 | 1000032050 | D=35 d=10,4 h=35 | 1,00 ST | SCHELLE | CLAMP | BRIDE |
| 101 | 1000032258 | D=38 d=10,4 h=36,5 | 1,00 ST | SCHELLE | CLAMP | BRIDE |
| 102 | 1000032104 | D=42 d=10,4 h=38,5 | 1,00 ST | SCHELLE | CLAMP | BRIDE |
| 103 | 1000032099 | D=52 d=10,4 h=43,5 | 1,00 ST | SCHELLE | CLAMP | BRIDE |
| 104 | 1000031958 | D=60 d=8,4 h=47,5 | 1,00 ST | SCHELLE | CLAMP | BRIDE |
| 105 | 1000031577 | D=70 d=10,4 h=55 | 1,00 ST | SCHELLE | CLAMP | BRIDE |
| 106 | 1000031185 | l1=37 M=6 | 1,00 ST | SCHWEISSPLATTE | WELD PLATE | PLAQUE À SOUDER |
| 107 | 1000031147 | l1=55 M=8 | 1,00 ST | SCHWEISSPLATTE | WELD PLATE | PLAQUE À SOUDER |
| 108 | 1000031169 | l1=70 M=8 | 1,00 ST | SCHWEISSPLATTE | WELD PLATE | PLAQUE À SOUDER |
| 109 | 1000031618 | l1=85 M=8 | 1,00 ST | SCHWEISSPLATTE | WELD PLATE | PLAQUE À SOUDER |
| 110 | 1000031770 | l1=110 M=8 | 1,00 ST | SCHWEISSPLATTE | WELD PLATE | PLAQUE À SOUDER |
| 111 | 1000105692 | l1=36 l2=20 M=6 | 1,00 ST | SCHWEISSPLATTE | WELD PLATE | PLAQUE À SOUDER |
| 112 | 1000031368 | l1=42 l2=26 M=6 | 1,00 ST | SCHWEISSPLATTE | WELD PLATE | PLAQUE À SOUDER |
| 113 | 1000031660 | l1=50 l2=33 M=6 | 1,00 ST | SCHWEISSPLATTE | WELD PLATE | PLAQUE À SOUDER |
| 114 | 1000031671 | l1=60 l2=40 M=6 | 1,00 ST | SCHWEISSPLATTE | WELD PLATE | PLAQUE À SOUDER |
| 115 | 1000052654 | l1=70 l2=52 M=6 | 1,00 ST | SCHWEISSPLATTE | WELD PLATE | PLAQUE À SOUDER |
| 116 | 1000125968 | l1=122 l2=94 M=6 | 1,00 ST | SCHWEISSPLATTE | WELD PLATE | PLAQUE À SOUDER |
| 117 | 1000031211 | h3=7 M=6 L=24 | 1,00 ST | DECKPLATTE | COVER PLATE | PLAQUE DE RECOUVREMENT |
| 118 | 1000031230 | h3=7 M=8 L=52 | 1,00 ST | DECKPLATTE | COVER PLATE | PLAQUE DE RECOUVREMENT |
| 119 | 1000031245 | h3=7 M=8 L=65 | 1,00 ST | DECKPLATTE | COVER PLATE | PLAQUE DE RECOUVREMENT |
| 120 | 1000031351 | h3=8 M=8 L=78 | 1,00 ST | DECKPLATTE | COVER PLATE | PLAQUE DE RECOUVREMENT |
| 121 | 1000031631 | h3=8 M=8 L=102 | 1,00 ST | DECKPLATTE | COVER PLATE | PLAQUE DE RECOUVREMENT |
| 122 | 1000031397 | l1=36 l2=20 | 1,00 ST | DECKPLATTE | COVER PLATE | PLAQUE DE RECOUVREMENT |
| 123 | 1000031260 | l1=42 l2= 26 | 1,00 ST | DECKPLATTE | COVER PLATE | PLAQUE DE RECOUVREMENT |
| 124 | 1000031643 | l1=50 l2= 33 | 1,00 ST | DECKPLATTE | COVER PLATE | PLAQUE DE RECOUVREMENT |
| 125 | 1000031685 | l1=60 l2=40 | 1,00 ST | DECKPLATTE | COVER PLATE | PLAQUE DE RECOUVREMENT |
| 126 | 1000099794 | l1=70 l2=52 | 1,00 ST | DECKPLATTE | COVER PLATE | PLAQUE DE RECOUVREMENT |
| 127 | 1000031699 | l1=86 l2=66 | 1,00 ST | DECKPLATTE | COVER PLATE | PLAQUE DE RECOUVREMENT |
| 128 | 1000125967 | l1=118 l2 94 | 1,00 ST | DECKPLATTE | COVER PLATE | PLAQUE DE RECOUVREMENT |
| 129 | 1000031335 | | 1,00 ST | PLATTE | PLATE | PLAQUE |

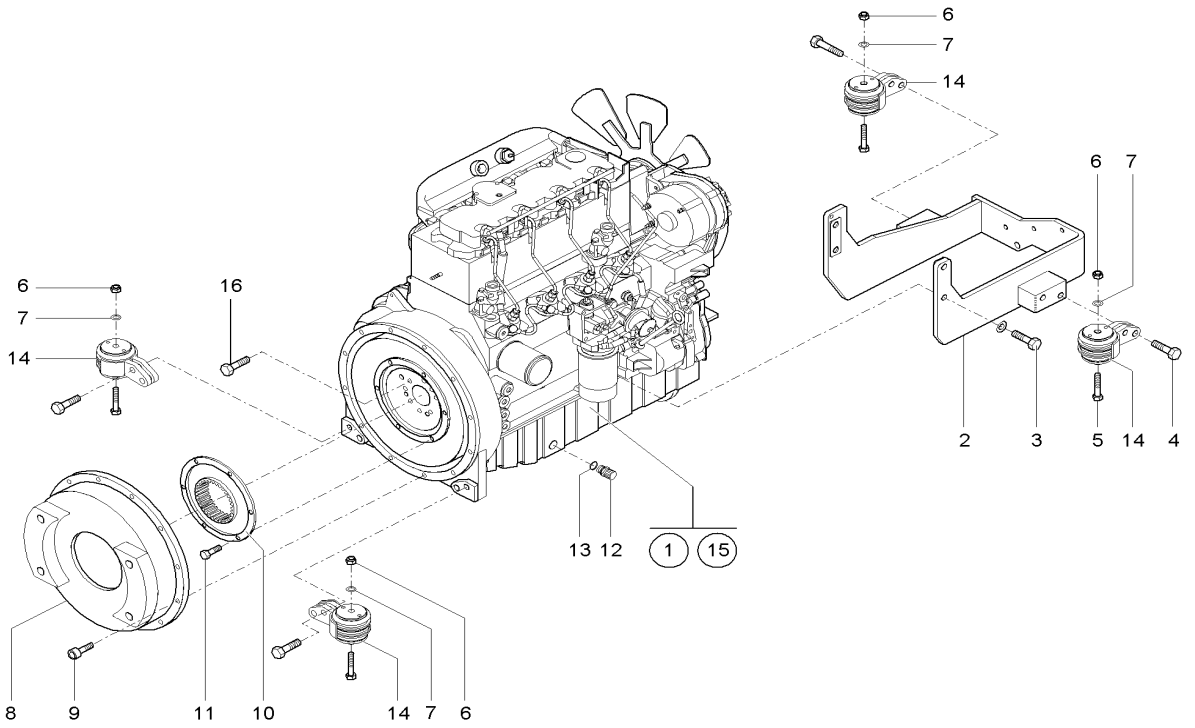


| Pos | Art.-Nr. | Anm. | Q'TY | BEZEICHNUNG | PART NAME | DESIGNATION |
|---|---|---|---|---|---|---|
| 1 | 1000113059 | A:347010060 | 1,00 ST | MOTOR | ENGINE | MOTEUR |
| 2 | 1000099103 | | 1,00 ST | MOTORTRÄGER | ENGINE SUPPORT | SUPPORT DE MOTEUR |
| 3 | 1000047792 | | 4,00 ST | 6KT-SCHRAUBE | HEX SCREW | VIS À TÊTE HEXAGONALE |
| 4 | 1000047626 | | 8,00 ST | 6KT-SCHRAUBE | HEX SCREW | VIS À TÊTE HEXAGONALE |
| 5 | 1000085362 | | 4,00 ST | 6KT-SCHRAUBE | HEX SCREW | VIS À TÊTE HEXAGONALE |
| 6 | 1000020127 | | 4,00 ST | 6KT-MUTTER | HEXAGON NUT | ÉCROU HEXAGONAL |
| 7 | 1000049219 | | 4,00 ST | SCHEIBE | WASHER | RONDELLE |
| 8 | 1000110208 | | 1,00 ST | FLANSCH | FLANGE | BRIDE |
| 9 | 1000085468 | | 11,00 ST | ZYLINDERSCHRAUBE | CHEESE HEAD SCREW | VIS A TETE CYLINDRIQUE |
| 10 | 1000144738 | | 1,00 ST | KUPPLUNG | COUPLING | COUPLEUR |
| 11 | 1000085390 | | 6,00 ST | 6KT-SCHRAUBE | HEX SCREW | VIS À TÊTE HEXAGONALE |
| 12 | 1000028095 | | 1,00 ST | ABLAßKUPPLUNG | DRAIN COUPLING | COUPLEUR DE PURGE |
| 13 | 1000013055 | | 1,00 ST | DICHTRING | SEAL RING | BAGUE D'ÉTANCHÉITÉ |
| 14 | 1000109073 | | 4,00 ST | MOTORLAGERUNG | ENGINE BEDDING | SUSPENSION DU MOTEUR |
| 15 | 1000151172 | E:347010061 | 1,00 ST | MOTOR | ENGINE | MOTEUR |
| 16 | 1000086758 | | 8,00 ST | SCHRAUBE | SCREW | VIS |

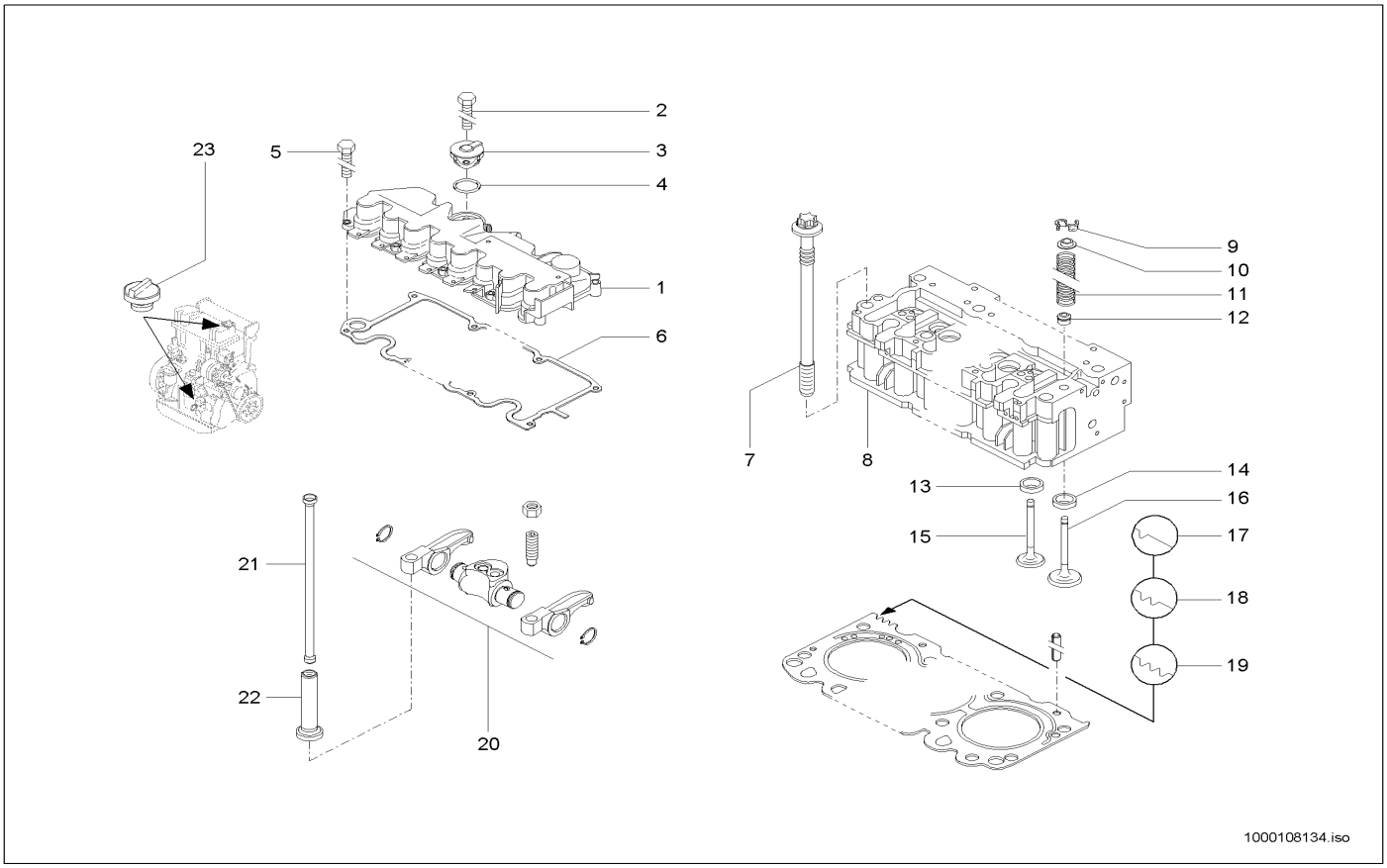


| Pos | Art.-Nr. | Anm. | Q'TY | BEZEICHNUNG | PART NAME | DESIGNATION |
|---|---|---|---|---|---|---|
| 1 | 1000109038 | | 1,00 ST | VENTILDECKEL | VALVE COVER | COUVERCLE DE SOUPAPE |
| 2 | 1000108927 | | 1,00 ST | 6KT-SCHRAUBE | HEX SCREW | VIS À TÊTE HEXAGONALE |
| 3 | 1000109040 | | 1,00 ST | VENTIL | VALVE | SOUPAPE |
| 4 | 1000087266 | | 1,00 ST | O-RING | O-RING | ANNEAU EN O |
| 5 | 1000108950 | | 10,00 ST | 6KT-SCHRAUBE | HEX SCREW | VIS À TÊTE HEXAGONALE |
| 6 | 1000109037 | | 1,00 ST | DICHTUNG | SEAL | JOINT D'ÉTANCHÉITÉ |
| 7 | 1000087205 | | 10,00 ST | ZYL.-KOPFSCHRAUBE | CYLINDERHEAD SCREW | BOULON DE CULASSE |
| 8 | 1000109063 | | 1,00 ST | ZYLINDERKOPF | CYLINDER HEAD | CULASSE |
| 9 | 1000108988 | | 16,00 ST | VENTILKEGEL | VALVE CONE | CÔNE DE SOUPAPE |
| 10 | 1000086763 | | 8,00 ST | DICHTUNG | SEAL | JOINT D'ÉTANCHÉITÉ |
| 11 | 1000087209 | | 8,00 ST | DRUCKFEDER | PRESSURE SPRING | RESSORT DE PRESSION |
| 12 | 1000109009 | | 8,00 ST | FEDERTELLER | SPRING CAP | CUVETTE DE RESSORT |
| 13 | 1000109060 | | 4,00 ST | VENTILSITZ | VALVE SEAT | SIÈGE DE SOUPAPE |
| 14 | 1000109008 | | 4,00 ST | VENTILSITZRING | VALVE SEAT | SIÈGE DE CLAPET |
| 15 | 1000109061 | | 4,00 ST | AUSLASSVENTIL | EXHAUST VALVE | SOUPAPE D'ÉCHAPPEMENT |
| 16 | 1000109065 | | 4,00 ST | EINLASSVENTIL | INTAKE VALVE | SOUPAPE D'ADMISSION |
| 17 | 1000109070 | 1,48 | 1,00 ST | ZYLINDERKOPFDICHTUNG | CYLINDER HEAD GASKET | GARNITURE DE CULASSE |
| 18 | 1000109071 | 1,55 | 1,00 ST | ZYLINDERKOPFDICHTUNG | CYLINDER HEAD GASKET | GARNITURE DE CULASSE |
| 19 | 1000109072 | 1,60 | 1,00 ST | ZYLINDERKOPFDICHTUNG | CYLINDER HEAD GASKET | GARNITURE DE CULASSE |
| 20 | 1000086776 | | 4,00 ST | KIPPHEBELBOCK | TILT LEVER SUPPORT | SUPPORT DES CULBUTEURS |
| 21 | 1000086755 | | 8,00 ST | STÖßELSTANGE | PUSH ROD | TIGE DE POUSSOIR |
| 22 | 1000087711 | | 8,00 ST | VENTILSTÖSSEL | VALVE TAPPET | POUSSOIR DE SOUPAPE |
| 23 | 1000087203 | | 1,00 ST | VERSCHLUSS | LOCK | FERMETURE |

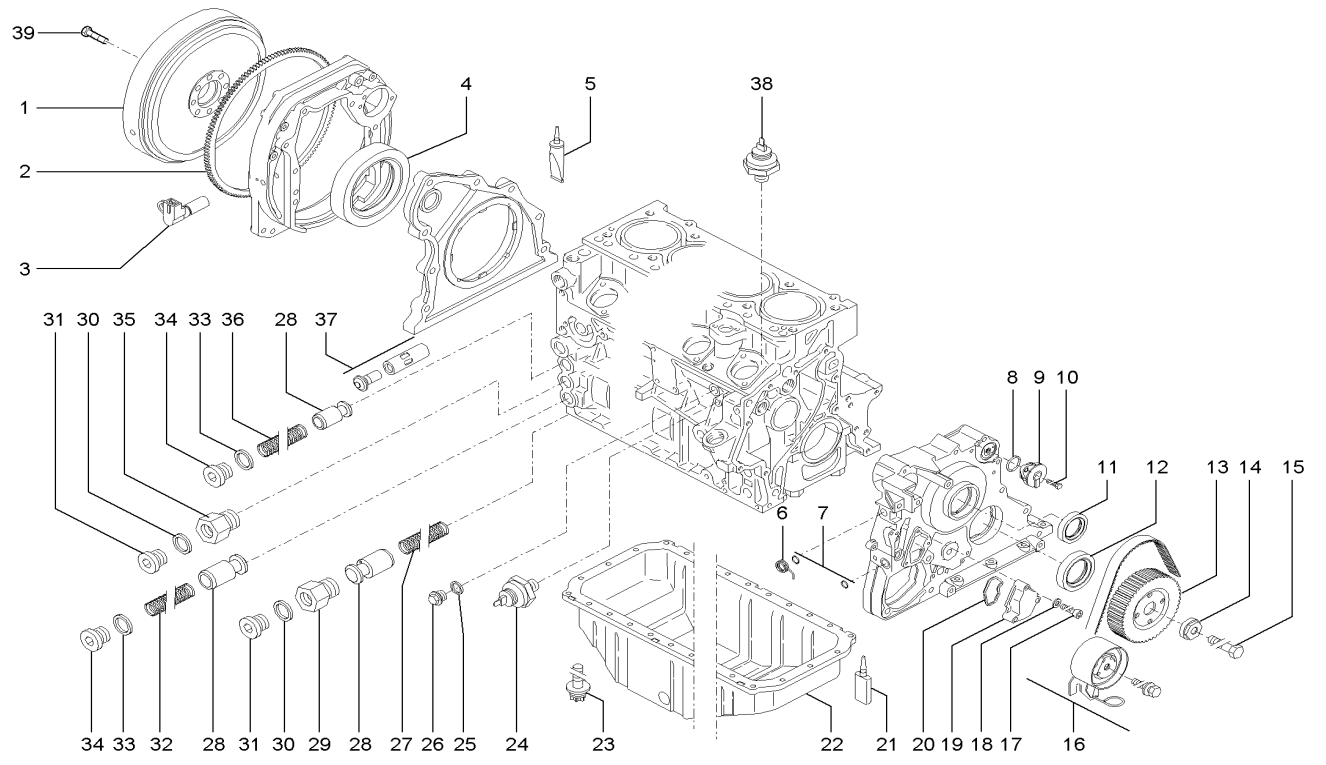


| Pos | Art.-Nr. | Anm. | Q'TY | BEZEICHNUNG | PART NAME | DESIGNATION |
|---|---|---|---|---|---|---|
| 1 | 1000109067 | | 1,00 ST | SCHWUNGRAD | FLYWHEEL | VOLANT |
| 2 | 1000109003 | > | 1,00 ST | ZAHNKRANZ | RING GEAR | COURONNE DENTÉE |
| 3 | 1000109074 | | 1,00 ST | DREHZAHLGEBER | RPM SENSOR | TRANSMETTEUR DE VITESSE DE ROTATION |
| 4 | 1000086401 | | 1,00 ST | RADIALWELLENDICHTRING | ROTARY SHAFT SEAL | BAGUE D'ÉTANCHÉITÉ D'ONDES RADIALI |
| 5 | 1000086436 | | 1,00 ST | DICHTMITTEL | SEALING COMPOUND | PRODUIT D'ÉTANCHÉITÉ |
| 6 | 1000131073 | | 1,00 ST | FEDER | SPRING | RESSORT |
| 7 | 1000087249 | | 2,00 ST | O-RING | O-RING | ANNEAU EN O |
| 8 | 1000108980 | | 1,00 ST | DICHTRING | SEAL RING | BAGUE D'ÉTANCHÉITÉ |
| 9 | 1000087267 | | 1,00 ST | ENTLÜFTUNGSVENTIL | VENTING VALVE | SOUPAPE D'AÉRATION |
| 10 | 1000108927 | | 1,00 ST | 6KT-SCHRAUBE | HEX SCREW | VIS À TÊTE HEXAGONALE |
| 11 | 1000086406 | | 1,00 ST | RADIALWELLENDICHTRING | ROTARY SHAFT SEAL | BAGUE D'ÉTANCHÉITÉ D'ONDES RADIALI |
| 12 | 1000086407 | | 1,00 ST | RADIALWELLENDICHTRING | ROTARY SHAFT SEAL | BAGUE D'ÉTANCHÉITÉ D'ONDES RADIALI |
| 13 | 1000131074 | | 1,00 ST | ZAHNRIEMENRAD | TOOTHED BELT WHEEL | ROULETTE MORSURE DE LA CEINTURE |
| 14 | 1000087210 | | 1,00 ST | SCHEIBE | WASHER | RONDELLE |
| 15 | 1000086746 | | 1,00 ST | 6KT-SCHRAUBE | HEX SCREW | VIS À TÊTE HEXAGONALE |
| 16 | 1000131075 | | 1,00 ST | REPARATURSATZ | REPAIRING SET | JEU DE RÉPARATION |
| 17 | 1000108969 | | 3,00 ST | SCHRAUBE | SCREW | VIS |
| 18 | 1000108847 | | 3,00 ST | SCHEIBE | WASHER | RONDELLE |
| 19 | 1000109010 | | 1,00 ST | DECKEL | COVER | COUVERCLE |
| 20 | 1000087250 | | 1,00 ST | DICHTUNG | SEAL | JOINT D'ÉTANCHÉITÉ |
| 21 | 1000087710 | | 1,00 ST | DICHTUNGSMASSE | SEALING COMPOUND | MASTIC À JOINT |
| 22 | 1000087365 | | 1,00 ST | ÖLWANNE | OIL SUMP | CARTER D'HUILE |
| 23 | 1000087201 | | 26,00 ST | TORX-SCHRAUBE | TORX SCREW | VIS DE TORX |
| 24 | 1000108972 | | 1,00 ST | ÖLDRUCKSCHALTER | OIL PRESSURE SWITCH | INTERRUPTEUR DE PRESSION D'HUILE |
| 25 | 1000108916 | | 1,00 ST | DICHTRING | SEAL RING | BAGUE D'ÉTANCHÉITÉ |
| 26 | 1000108919 | | 1,00 ST | STOPFEN | PLUG | BOUCHON |
| 27 | 1000052508 | | 1,00 ST | DRUCKFEDER | PRESSURE SPRING | RESSORT DE PRESSION |
| 28 | 1000052505 | | 3,00 ST | VENTIL | VALVE | SOUPAPE |
| 29 | 1000109000 | | 1,00 ST | NIPPEL | NIPPLE | RACCORD |
| 30 | 1000108915 | | 2,00 ST | DICHTRING | SEAL RING | BAGUE D'ÉTANCHÉITÉ |
| 31 | 1000108952 | | 2,00 ST | STOPFEN | PLUG | BOUCHON |
| 32 | 1000052507 | | 1,00 ST | DRUCKFEDER | PRESSURE SPRING | RESSORT DE PRESSION |
| 33 | 1000108918 | | 2,00 ST | DICHTRING | SEAL RING | BAGUE D'ÉTANCHÉITÉ |
| 34 | 1000108845 | | 2,00 ST | STOPFEN | PLUG | BOUCHON |
| 35 | 1000108999 | | 1,00 ST | NIPPEL | NIPPLE | RACCORD |
| 36 | 1000052506 | | 1,00 ST | DRUCKFEDER | PRESSURE SPRING | RESSORT DE PRESSION |
| 37 | 1000087654 | | 1,00 ST | THERMOSTAT | THERMOSTAT | THERMOSTAT |
| 38 | 1000098279 | | 1,00 ST | TEMPERATURGEBER | TEMPERATURE SENSOR | TRANSMETTEUR DE TEMPÉRATURE |
| 39 | 1000086758 | | 8,00 ST | SCHRAUBE | SCREW | VIS |

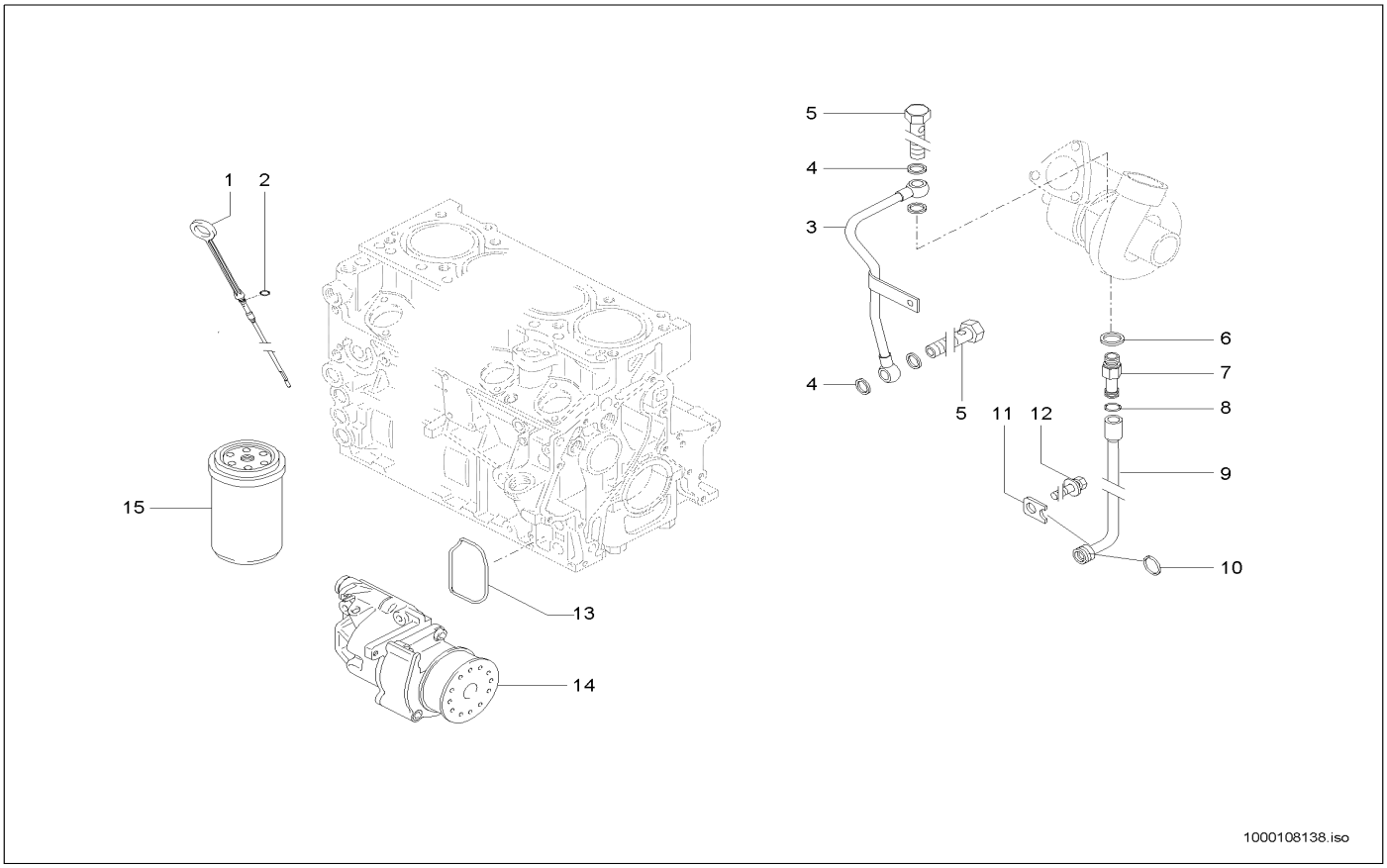


| Pos | Art.-Nr. | Anm. | Q'TY | BEZEICHNUNG | PART NAME | DESIGNATION |
|---|---|---|---|---|---|---|
| 1 | 1000109005 | | 1,00 ST | ÖLMEßSTAB | OILDIP STICK | JALON D'HUILE |
| 2 | 1000108973 | > | 1,00 ST | DICHTRING | SEAL RING | BAGUE D'ÉTANCHÉITÉ |
| 3 | 1000086770 | | 1,00 ST | SCHMIERLEITUNG | LUBRICATION LINE | LIGNE LUBRIFANTE |
| 4 | 1000108913 | | 2,00 ST | DICHTRING | SEAL RING | BAGUE D'ÉTANCHÉITÉ |
| 5 | 1000086703 | | 2,00 ST | HOHLSCHRAUBE | BANJO BOLT | VIS CREUSE |
| 6 | 1000108914 | | 1,00 ST | DICHTRING | SEAL RING | BAGUE D'ÉTANCHÉITÉ |
| 7 | 1000087468 | | 1,00 ST | STUTZEN | END PIECE | TUBULURE |
| 8 | 1000089373 | | 1,00 ST | DICHTRING | SEAL RING | BAGUE D'ÉTANCHÉITÉ |
| 9 | 1000087466 | | 1,00 ST | RÜCKLAUFLEITUNG | REFLUX LINE | CANALISATION DE RETOUR |
| 10 | 1000108981 | | 1,00 ST | DICHTRING | SEAL RING | BAGUE D'ÉTANCHÉITÉ |
| 11 | 1000089378 | | 1,00 ST | BLECH | PLATE | TÔLE |
| 12 | 1000108976 | | 1,00 ST | 6KT-SCHRAUBE | HEX SCREW | VIS À TÊTE HEXAGONALE |
| 13 | 1000087213 | | 1,00 ST | DICHTUNG | SEAL | JOINT D'ÉTANCHÉITÉ |
| 14 | 1000109062 | | 1,00 ST | SCHMIERÖLPUMPE | LUB.OIL PUMP | POMPE À HUILE LUBRIFIANTE |
| 15 | 1000000351 | | 1,00 ST | ÖLFILTER | OIL FILTER | FILTRE D'HUILE |

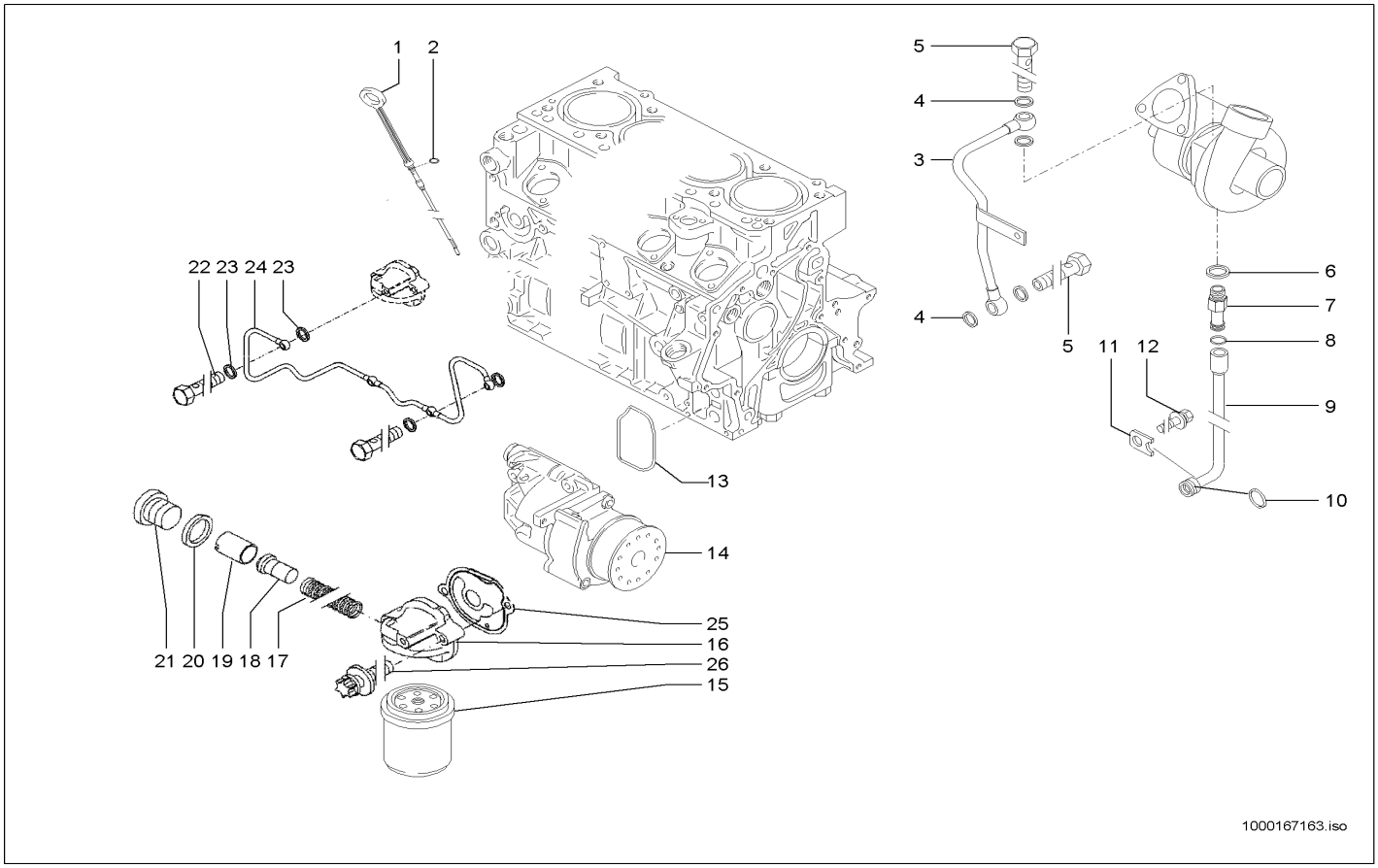


| Pos | Art.-Nr. | Anm. | Q'TY | BEZEICHNUNG | PART NAME | DESIGNATION |
|---|---|---|---|---|---|---|
| 1 | 1000109005 | | 1,00 ST | ÖLMEßSTAB | OILDIP STICK | JALON D'HUILE |
| 2 | 1000108973 | > | 1,00 ST | DICHTRING | SEAL RING | BAGUE D'ÉTANCHÉITÉ |
| 3 | 1000086770 | | 1,00 ST | SCHMIERLEITUNG | LUBRICATION LINE | LIGNE LUBRIFANTE |
| 4 | 1000108913 | | 2,00 ST | DICHTRING | SEAL RING | BAGUE D'ÉTANCHÉITÉ |
| 5 | 1000086703 | | 2,00 ST | HOHLSCHRAUBE | BANJO BOLT | VIS CREUSE |
| 6 | 1000108914 | | 1,00 ST | DICHTRING | SEAL RING | BAGUE D'ÉTANCHÉITÉ |
| 7 | 1000087468 | | 1,00 ST | STUTZEN | END PIECE | TUBULURE |
| 8 | 1000089373 | | 1,00 ST | DICHTRING | SEAL RING | BAGUE D'ÉTANCHÉITÉ |
| 9 | 1000087466 | | 1,00 ST | RÜCKLAUFLEITUNG | REFLUX LINE | CANALISATION DE RETOUR |
| 10 | 1000108981 | | 1,00 ST | DICHTRING | SEAL RING | BAGUE D'ÉTANCHÉITÉ |
| 11 | 1000089378 | | 1,00 ST | BLECH | PLATE | TÔLE |
| 12 | 1000108976 | | 1,00 ST | 6KT-SCHRAUBE | HEX SCREW | VIS À TÊTE HEXAGONALE |
| 13 | 1000087213 | | 1,00 ST | DICHTUNG | SEAL | JOINT D'ÉTANCHÉITÉ |
| 14 | 1000109062 | | 1,00 ST | SCHMIERÖLPUMPE | LUB.OIL PUMP | POMPE À HUILE LUBRIFIANTE |
| 15 | 1000000351 | | 1,00 ST | ÖLFILTER | OIL FILTER | FILTRE D'HUILE |
| 16 | 1000167045 | | 1,00 ST | KONSOLE | CONSOLE | CONSOLE |
| 17 | 1000167084 | | 1,00 ST | DRUCKFEDER | PRESSURE SPRING | RESSORT DE PRESSION |
| 18 | 1000167088 | | 1,00 ST | REGELSCHIEBER | CONTROL SLIDE VALVE | TIROIR DE RÉGLAGE |
| 19 | 1000167089 | | 1,00 ST | TEMPERATURFÜHLER | TEMPERATURE FEELER | CAPTEUR DE TEMPÉRATURE |
| 20 | 1000108918 | | 1,00 ST | DICHTRING | SEAL RING | BAGUE D'ÉTANCHÉITÉ |
| 21 | 1000167086 | | 1,00 ST | STOPFEN | PLUG | BOUCHON |
| 22 | 1000167070 | | 4,00 ST | HOHLSCHRAUBE | BANJO BOLT | VIS CREUSE |
| 23 | 1000167081 | | 8,00 ST | DICHTRING | SEAL RING | BAGUE D'ÉTANCHÉITÉ |
| 24 | 1000167047 | | 1,00 ST | STEUERLEITUNG | CONTROLE LINE | COND. COMMANDE |
| 25 | 1000167046 | | 1,00 ST | DICHTUNG | SEAL | JOINT D'ÉTANCHÉITÉ |
| 26 | 1000167069 | | 2,00 ST | TORX-SCHRAUBE | TORX SCREW | VIS DE TORX |

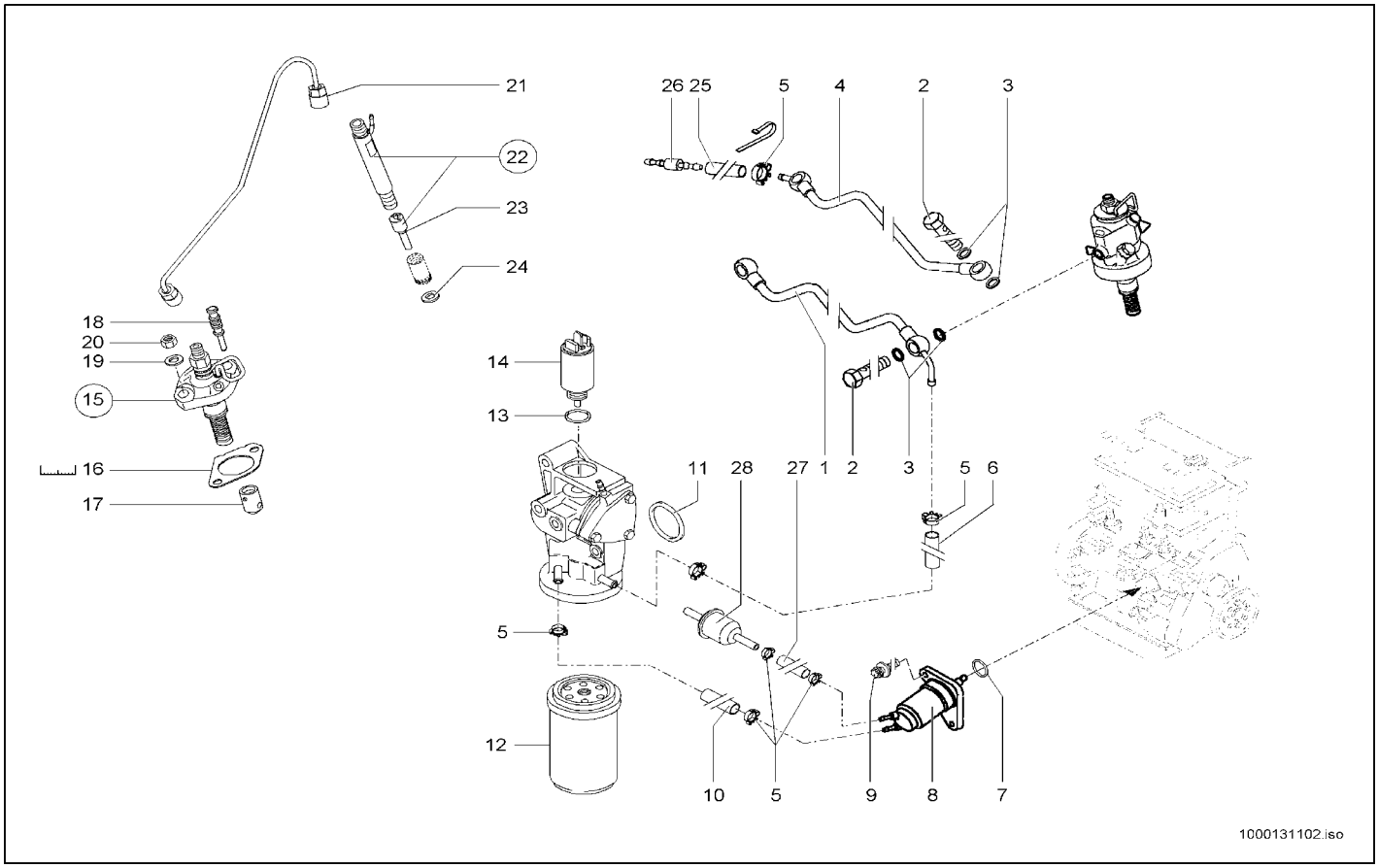


| Pos | Art.-Nr. | Anm. | Q'TY | BEZEICHNUNG | PART NAME | DESIGNATION |
|---|---|---|---|---|---|---|
| 1 | 1000129649 | | 1,00 ST | KRAFTSTOFFLEITUNG | FUEL LINE | CONDUITE DE COMBUSTIBLE |
| 2 | 1000086703 | | 8,00 ST | HOHLSCHRAUBE | BANJO BOLT | VIS CREUSE |
| 3 | 1000108982 | | 16,00 ST | DICHTRING | SEAL RING | BAGUE D'ÉTANCHÉITÉ |
| 4 | 1000129645 | | 1,00 ST | KRAFTSTOFFLEITUNG | FUEL LINE | CONDUITE DE COMBUSTIBLE |
| 5 | 1000086747 | | 7,00 ST | SCHELLE | CLAMP | BRIDE |
| 6 | 1000129662 | | 1,00 ST | SCHLAUCH | HOSE | TUYAU FLEXIBLE |
| 7 | 1000056656 | | 1,00 ST | O-RING | O-RING | ANNEAU EN O |
| 8 | 1000129652 | | 1,00 ST | KRAFTSTOFFPUMPE | FUEL PUMP | POMPE DE COMBUSTIBLE |
| 9 | 1000108977 | | 2,00 ST | TORX-SCHRAUBE | TORX SCREW | VIS DE TORX |
| 10 | 1000129667 | | 1,00 ST | SCHLAUCH | HOSE | TUYAU FLEXIBLE |
| 11 | 1000108970 | | 1,00 ST | DICHTRING | SEAL RING | BAGUE D'ÉTANCHÉITÉ |
| 12 | 1000108956 | | 1,00 ST | KRAFTSTOFFILTER | FUEL FILTER | FILTRE DE CARBURANT |
| 13 | 1000108983 | | 1,00 ST | DICHTRING | SEAL RING | BAGUE D'ÉTANCHÉITÉ |
| 14 | 1000109034 | | 1,00 ST | HUBMAGNET | LIFT SOLENOID | AIMANT DE LEVAGE |
| 15 | 1000167048 | | 4,00 ST | O-RING | O-RING | ANNEAU EN O |
| 16 | 1000087229 | 1,0 | 1,00 ST | SCHEIBE | WASHER | RONDELLE |
| 16 | 1000087228 | 0,9 | 1,00 ST | SCHEIBE | WASHER | RONDELLE |
| 16 | 1000087226 | 0,7 | 1,00 ST | SCHEIBE | WASHER | RONDELLE |
| 16 | 1000087225 | 0,6 | 1,00 ST | SCHEIBE | WASHER | RONDELLE |
| 16 | 1000087224 | 0,5 | 1,00 ST | SCHEIBE | WASHER | RONDELLE |
| 16 | 1000087223 | 0,4 | 1,00 ST | SCHEIBE | WASHER | RONDELLE |
| 16 | 1000087227 | 0,8 | 1,00 ST | SCHEIBE | WASHER | RONDELLE |
| 16 | 1000109007 | 1,2 | 1,00 ST | SCHEIBE | WASHER | RONDELLE |
| 16 | 1000109006 | 1,1 | 1,00 ST | DICHTUNG | SEAL | JOINT D'ÉTANCHÉITÉ |
| 17 | 1000129642 | | 1,00 ST | STÖSSEL | PUSH ROD | POUSSOIR |
| 18 | 1000129643 | | 4,00 ST | STOPFEN | PLUG | BOUCHON |
| 19 | 1000108990 | | 8,00 ST | SCHEIBE | WASHER | RONDELLE |
| 20 | 1000131104 | | 8,00 ST | 6KT-MUTTER | HEXAGON NUT | ÉCROU HEXAGONAL |
| 21 | 1000129653 | | 1,00 ST | EINSPRITZLEITUNG | INJECTION LINE | LIGNE D'INJECTION |
| 22 | 1000129650 | | 4,00 ST | EINSPRITZVENTIL | INJECTION VALVE | SOUPAPE D'INJECTION |
| 23 | 1000129651 | | 4,00 ST | DÜSENELEMENT | NOZZLE ELEMENT | ÉLÉMENT DE CLAPET |
| 24 | 1000131105 | | 4,00 ST | DICHTUNG | SEAL | JOINT D'ÉTANCHÉITÉ |
| 25 | 1000129646 | | 1,00 ST | SCHLAUCH | HOSE | TUYAU FLEXIBLE |
| 26 | 1000129648 | | 1,00 ST | VERBINDUNGSSTÜCK | CONNECTION PIECE | ADAPTEUR |
| 27 | 1000129661 | | 1,00 ST | SCHLAUCH | HOSE | TUYAU FLEXIBLE |
| 28 | 1000000412 | | 1,00 ST | KRAFTSTOFFILTER | FUEL FILTER | FILTRE DE CARBURANT |
| 29 | 1000167049 | - A - | 4,00 ST | EINSPRITZPUMPE | INJECTION PUMP | POMPE D'INJECTION |
| 30 | 1000167050 | - B - | 4,00 ST | EINSPRITZPUMPE | INJECTION PUMP | POMPE D'INJECTION |
| 31 | 1000167051 | - C - | 4,00 ST | EINSPRITZPUMPE | INJECTION PUMP | POMPE D'INJECTION |
| 32 | 1000167052 | - D - | 4,00 ST | EINSPRITZPUMPE | INJECTION PUMP | POMPE D'INJECTION |

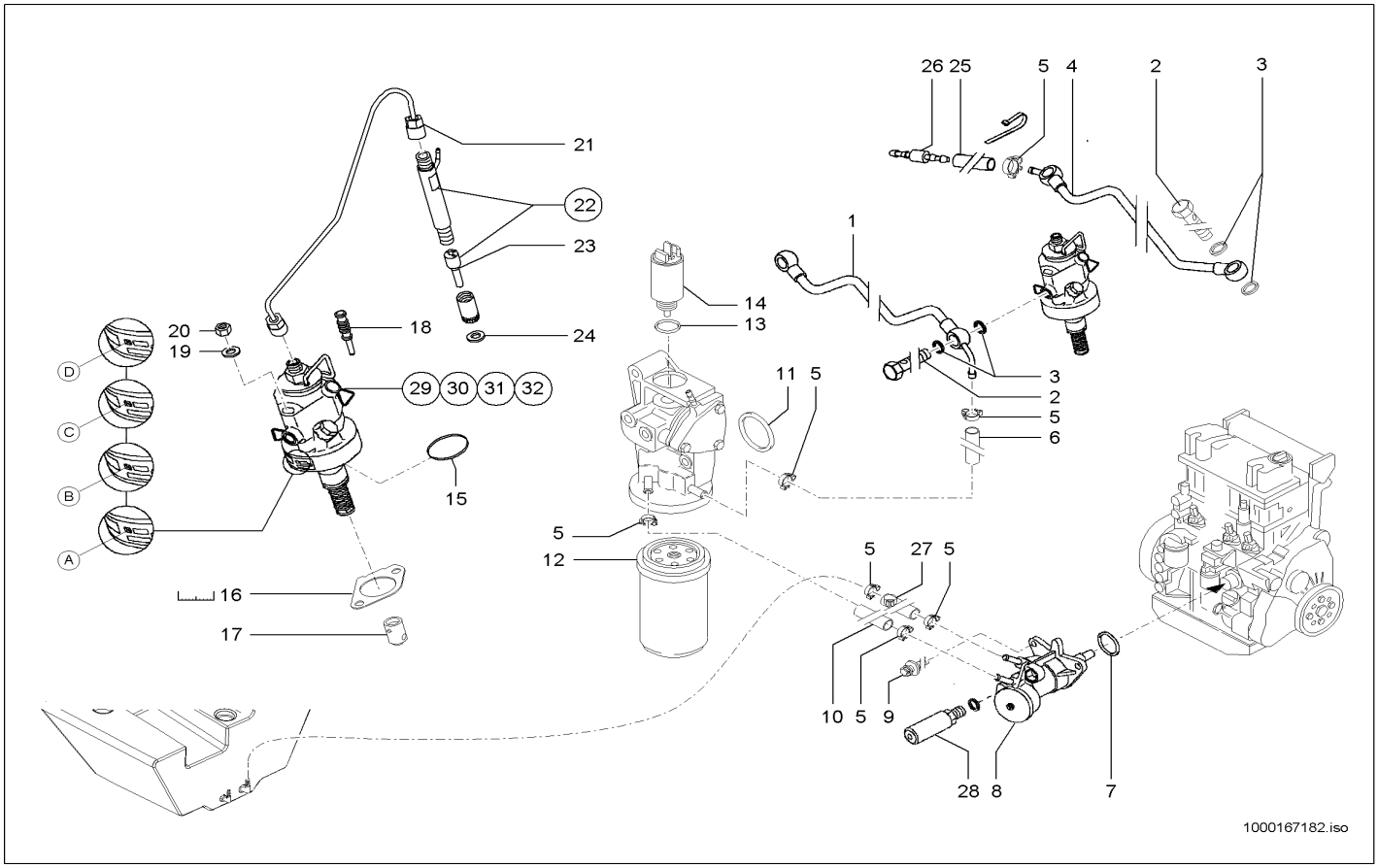


| Pos | Art.-Nr. | Anm. | Q'TY | BEZEICHNUNG | PART NAME | DESIGNATION |
|---|---|---|---|---|---|---|
| 1 | 1000129649 | | 1,00 ST | KRAFTSTOFFLEITUNG | FUEL LINE | CONDUITE DE COMBUSTIBLE |
| 2 | 1000086703 | | 8,00 ST | HOHLSCHRAUBE | BANJO BOLT | VIS CREUSE |
| 3 | 1000108982 | | 16,00 ST | DICHTRING | SEAL RING | BAGUE D'ÉTANCHÉITÉ |
| 4 | 1000129645 | | 1,00 ST | KRAFTSTOFFLEITUNG | FUEL LINE | CONDUITE DE COMBUSTIBLE |
| 5 | 1000086747 | | 7,00 ST | SCHELLE | CLAMP | BRIDE |
| 6 | 1000129662 | | 1,00 ST | SCHLAUCH | HOSE | TUYAU FLEXIBLE |
| 7 | 1000167025 | | 1,00 ST | O-RING | O-RING | ANNEAU EN O |
| 8 | 1000167024 | | 1,00 ST | KRAFTSTOFFPUMPE | FUEL PUMP | POMPE DE COMBUSTIBLE |
| 9 | 1000108977 | | 2,00 ST | TORX-SCHRAUBE | TORX SCREW | VIS DE TORX |
| 10 | 1000129667 | | 1,00 ST | SCHLAUCH | HOSE | TUYAU FLEXIBLE |
| 11 | 1000108970 | | 1,00 ST | DICHTRING | SEAL RING | BAGUE D'ÉTANCHÉITÉ |
| 12 | 1000108956 | | 1,00 ST | KRAFTSTOFFILTER | FUEL FILTER | FILTRE DE CARBURANT |
| 13 | 1000108983 | | 1,00 ST | DICHTRING | SEAL RING | BAGUE D'ÉTANCHÉITÉ |
| 14 | 1000109034 | | 1,00 ST | HUBMAGNET | LIFT SOLENOID | AIMANT DE LEVAGE |
| 15 | 1000167048 | | 4,00 ST | O-RING | O-RING | ANNEAU EN O |
| 16 | 1000087223 | 0,4 | 1,00 ST | SCHEIBE | WASHER | RONDELLE |
| 16 | 1000087224 | 0,5 | 1,00 ST | SCHEIBE | WASHER | RONDELLE |
| 16 | 1000087225 | 0,6 | 1,00 ST | SCHEIBE | WASHER | RONDELLE |
| 16 | 1000087226 | 0,7 | 1,00 ST | SCHEIBE | WASHER | RONDELLE |
| 16 | 1000087227 | 0,8 | 1,00 ST | SCHEIBE | WASHER | RONDELLE |
| 16 | 1000087228 | 0,9 | 1,00 ST | SCHEIBE | WASHER | RONDELLE |
| 16 | 1000087229 | 1,0 | 1,00 ST | SCHEIBE | WASHER | RONDELLE |
| 16 | 1000109007 | 1,2 | 1,00 ST | SCHEIBE | WASHER | RONDELLE |
| 16 | 1000109006 | 1,1 | 1,00 ST | DICHTUNG | SEAL | JOINT D'ÉTANCHÉITÉ |
| 17 | 1000167027 | | 1,00 ST | STÖSSEL | PUSH ROD | POUSSOIR |
| 18 | 1000129643 | | 4,00 ST | STOPFEN | PLUG | BOUCHON |
| 19 | 1000108990 | | 8,00 ST | SCHEIBE | WASHER | RONDELLE |
| 20 | 1000131104 | | 8,00 ST | 6KT-MUTTER | HEXAGON NUT | ÉCROU HEXAGONAL |
| 21 | 1000129653 | | 1,00 ST | EINSPRITZLEITUNG | INJECTION LINE | LIGNE D'INJECTION |
| 22 | 1000129650 | | 4,00 ST | EINSPRITZVENTIL | INJECTION VALVE | SOUPAPE D'INJECTION |
| 23 | 1000129651 | | 4,00 ST | DÜSENELEMENT | NOZZLE ELEMENT | ÉLÉMENT DE CLAPET |
| 24 | 1000131105 | | 4,00 ST | DICHTUNG | SEAL | JOINT D'ÉTANCHÉITÉ |
| 25 | 1000129646 | | 1,00 ST | SCHLAUCH | HOSE | TUYAU FLEXIBLE |
| 26 | 1000129648 | | 1,00 ST | VERBINDUNGSSTÜCK | CONNECTION PIECE | ADAPTEUR |
| 27 | 1000100939 | | 1,00 ST | SCHLAUCH | HOSE | TUYAU FLEXIBLE |
| 28 | 1000167026 | | 1,00 ST | HANDPUMPE | HAND PUMP | POMPE À MAIN |
| 29 | 1000167049 | - A - | 4,00 ST | EINSPRITZPUMPE | INJECTION PUMP | POMPE D'INJECTION |
| 30 | 1000167050 | - B - | 4,00 ST | EINSPRITZPUMPE | INJECTION PUMP | POMPE D'INJECTION |
| 31 | 1000167051 | - C - | 4,00 ST | EINSPRITZPUMPE | INJECTION PUMP | POMPE D'INJECTION |
| 32 | 1000167052 | - D - | 4,00 ST | EINSPRITZPUMPE | INJECTION PUMP | POMPE D'INJECTION |

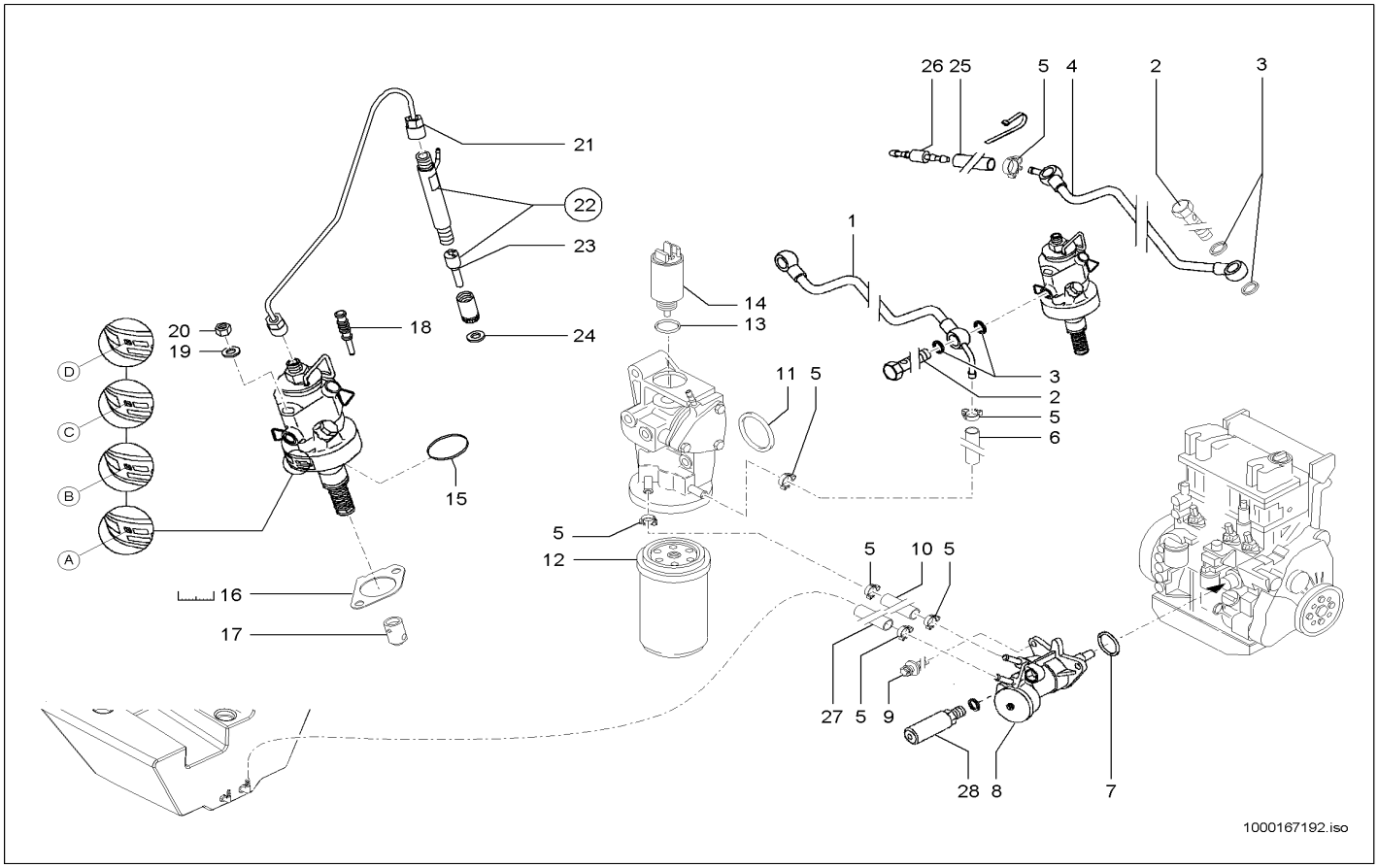


| Pos | Art.-Nr. | Anm. | Q'TY | BEZEICHNUNG | PART NAME | DESIGNATION |
|---|---|---|---|---|---|---|
| 1 | 1000129649 | | 1,00 ST | KRAFTSTOFFLEITUNG | FUEL LINE | CONDUITE DE COMBUSTIBLE |
| 2 | 1000086703 | | 8,00 ST | HOHLSCHRAUBE | BANJO BOLT | VIS CREUSE |
| 3 | 1000108982 | | 16,00 ST | DICHTRING | SEAL RING | BAGUE D'ÉTANCHÉITÉ |
| 4 | 1000129645 | | 1,00 ST | KRAFTSTOFFLEITUNG | FUEL LINE | CONDUITE DE COMBUSTIBLE |
| 5 | 1000086747 | | 7,00 ST | SCHELLE | CLAMP | BRIDE |
| 6 | 1000129662 | | 1,00 ST | SCHLAUCH | HOSE | TUYAU FLEXIBLE |
| 7 | 1000167025 | | 1,00 ST | O-RING | O-RING | ANNEAU EN O |
| 8 | 1000167024 | | 1,00 ST | KRAFTSTOFFPUMPE | FUEL PUMP | POMPE DE COMBUSTIBLE |
| 9 | 1000108977 | | 2,00 ST | TORX-SCHRAUBE | TORX SCREW | VIS DE TORX |
| 10 | 1000129667 | | 1,00 ST | SCHLAUCH | HOSE | TUYAU FLEXIBLE |
| 11 | 1000108970 | | 1,00 ST | DICHTRING | SEAL RING | BAGUE D'ÉTANCHÉITÉ |
| 12 | 1000108956 | | 1,00 ST | KRAFTSTOFFILTER | FUEL FILTER | FILTRE DE CARBURANT |
| 13 | 1000108983 | | 1,00 ST | DICHTRING | SEAL RING | BAGUE D'ÉTANCHÉITÉ |
| 14 | 1000109034 | | 1,00 ST | HUBMAGNET | LIFT SOLENOID | AIMANT DE LEVAGE |
| 15 | 1000167048 | | 4,00 ST | O-RING | O-RING | ANNEAU EN O |
| 16 | 1000087223 | 0,4 | 1,00 ST | SCHEIBE | WASHER | RONDELLE |
| 16 | 1000087224 | 0,5 | 1,00 ST | SCHEIBE | WASHER | RONDELLE |
| 16 | 1000087225 | 0,6 | 1,00 ST | SCHEIBE | WASHER | RONDELLE |
| 16 | 1000087226 | 0,7 | 1,00 ST | SCHEIBE | WASHER | RONDELLE |
| 16 | 1000087227 | 0,8 | 1,00 ST | SCHEIBE | WASHER | RONDELLE |
| 16 | 1000087228 | 0,9 | 1,00 ST | SCHEIBE | WASHER | RONDELLE |
| 16 | 1000087229 | 1,0 | 1,00 ST | SCHEIBE | WASHER | RONDELLE |
| 16 | 1000109007 | 1,2 | 1,00 ST | SCHEIBE | WASHER | RONDELLE |
| 16 | 1000109006 | 1,1 | 1,00 ST | DICHTUNG | SEAL | JOINT D'ÉTANCHÉITÉ |
| 17 | 1000167027 | | 1,00 ST | STÖSSEL | PUSH ROD | POUSSOIR |
| 18 | 1000129643 | | 4,00 ST | STOPFEN | PLUG | BOUCHON |
| 19 | 1000108990 | | 8,00 ST | SCHEIBE | WASHER | RONDELLE |
| 20 | 1000131104 | | 8,00 ST | 6KT-MUTTER | HEXAGON NUT | ÉCROU HEXAGONAL |
| 21 | 1000129653 | | 1,00 ST | EINSPRITZLEITUNG | INJECTION LINE | LIGNE D'INJECTION |
| 22 | 1000129650 | | 4,00 ST | EINSPRITZVENTIL | INJECTION VALVE | SOUPAPE D'INJECTION |
| 23 | 1000129651 | | 4,00 ST | DÜSENELEMENT | NOZZLE ELEMENT | ÉLÉMENT DE CLAPET |
| 24 | 1000131105 | | 4,00 ST | DICHTUNG | SEAL | JOINT D'ÉTANCHÉITÉ |
| 25 | 1000129646 | | 1,00 ST | SCHLAUCH | HOSE | TUYAU FLEXIBLE |
| 26 | 1000129648 | | 1,00 ST | VERBINDUNGSSTÜCK | CONNECTION PIECE | ADAPTEUR |
| 27 | 1000100939 | | 1,00 ST | SCHLAUCH | HOSE | TUYAU FLEXIBLE |
| 28 | 1000167026 | | 1,00 ST | HANDPUMPE | HAND PUMP | POMPE À MAIN |
| 29 | 1000167053 | - A - | 4,00 ST | EINSPRITZPUMPE | INJECTION PUMP | POMPE D'INJECTION |
| 30 | 1000167054 | - B - | 4,00 ST | EINSPRITZPUMPE | INJECTION PUMP | POMPE D'INJECTION |
| 31 | 1000167055 | - C - | 4,00 ST | EINSPRITZPUMPE | INJECTION PUMP | POMPE D'INJECTION |
| 32 | 1000167056 | - D - | 4,00 ST | EINSPRITZPUMPE | INJECTION PUMP | POMPE D'INJECTION |

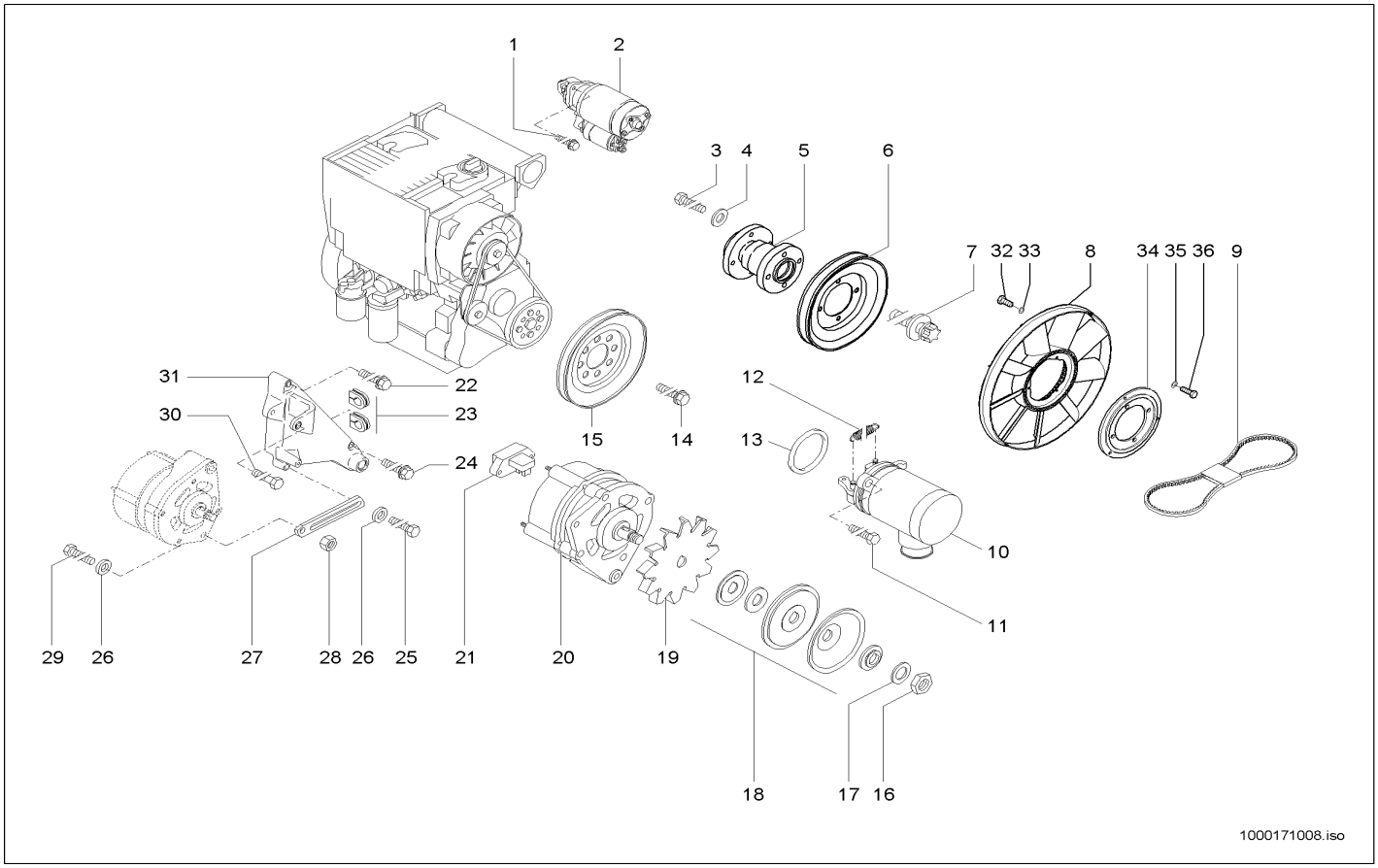


| Pos | Art.-Nr. | Anm. | Q'TY | BEZEICHNUNG | PART NAME | DESIGNATION |
|---|---|---|---|---|---|---|
| 1 | 1000108974 | | 2,00 ST | 6KT-SCHRAUBE | HEX SCREW | VIS À TÊTE HEXAGONALE |
| 2 | 1000108979 | | 1,00 ST | STARTER | STARTER | STARTER |
| 3 | 1000108849 | | 4,00 ST | 6KT-SCHRAUBE | HEX SCREW | VIS À TÊTE HEXAGONALE |
| 4 | 1000108951 | | 4,00 ST | SCHEIBE | WASHER | RONDELLE |
| 5 | 1000147672 | | 1,00 ST | FLANSCH | FLANGE | BRIDE |
| 6 | 1000108995 | | 1,00 ST | KEILRIEMENSCHEIBE | PULLEY | DISQUE DE COURROIE TRAPÉZOÏDALE |
| 7 | 1000020553 | | 4,00 ST | 6KT-SCHRAUBE | HEX SCREW | VIS À TÊTE HEXAGONALE |
| 8 | 1000135788 | | 1,00 ST | LÜFTERFLÜGEL | PROPELLER | AILE DU VENTILATEUR |
| 9 | 1000108958 | | 1,00 ST | KEILRIEMEN | V-BELT | COURROIE TRAPÉZOÏDALE |
| 10 | 1000108801 | | 1,00 ST | ABSTELLMAGNET | SHUT OFF SOLENOID | AIMANT D'ARRÊT |
| 11 | 1000108920 | | 2,00 ST | 6KT-SCHRAUBE | HEX SCREW | VIS À TÊTE HEXAGONALE |
| 12 | 1000086792 | | 1,00 ST | ZUGFEDER | TENSION SPRING | RESSORT DE TRACTION |
| 13 | 1000086704 | | 1,00 ST | O-RING | O-RING | ANNEAU EN O |
| 14 | 1000089376 | | 4,00 ST | 6KT-SCHRAUBE | HEX SCREW | VIS À TÊTE HEXAGONALE |
| 15 | 1000108986 | | 1,00 ST | KEILRIEMENSCHEIBE | PULLEY | DISQUE DE COURROIE TRAPÉZOÏDALE |
| 16 | 1000108921 | | 1,00 ST | 6KT-MUTTER | HEXAGON NUT | ÉCROU HEXAGONAL |
| 17 | 1000108846 | | 1,00 ST | FEDERSCHEIBE | SPRING RING | RONDELLE À RESSORT |
| 18 | 1000108962 | | 1,00 ST | KEILRIEMENSCHEIBE | PULLEY | DISQUE DE COURROIE TRAPÉZOÏDALE |
| 19 | 1000108954 | | 1,00 ST | LÜFTERRAD | VENTILATOR FAN | ROUE DE VENTILATEUR |
| 20 | 1000108966 | | 1,00 ST | GENERATOR | GENERATOR | GÉNÉRATEUR |
| 21 | 1000108959 | | 1,00 ST | SPANNUNGSREGLER | TENSION REGULATOR | RÉGULATEUR DE TENSION |
| 22 | 1000108978 | | 1,00 ST | 6KT-SCHRAUBE | HEX SCREW | VIS À TÊTE HEXAGONALE |
| 23 | 1000086774 | | 2,00 ST | GUMMIMUFFE | RUBBER SLEEVE | MANCHON EN CAOUTCHOUC |
| 24 | 1000108971 | | 1,00 ST | 6KT-SCHRAUBE | HEX SCREW | VIS À TÊTE HEXAGONALE |
| 25 | 1000108910 | | 1,00 ST | 6KT-SCHRAUBE | HEX SCREW | VIS À TÊTE HEXAGONALE |
| 26 | 1000108987 | | 2,00 ST | SCHEIBE | WASHER | RONDELLE |
| 27 | 1000108989 | | 1,00 ST | HALTERUNG | BRACKET | FIXATION |
| 28 | 1000108925 | | 1,00 ST | 6KT-MUTTER | HEXAGON NUT | ÉCROU HEXAGONAL |
| 29 | 1000108911 | | 1,00 ST | 6KT-SCHRAUBE | HEX SCREW | VIS À TÊTE HEXAGONALE |
| 30 | 1000108848 | | 1,00 ST | 6KT-SCHRAUBE | HEX SCREW | VIS À TÊTE HEXAGONALE |
| 31 | 1000109011 | | 1,00 ST | KONSOLE | CONSOLE | CONSOLE |
| 32 | 1000020553 | | 3,00 ST | 6KT-SCHRAUBE | HEX SCREW | VIS À TÊTE HEXAGONALE |
| 33 | 1000092290 | | 3,00 ST | SCHEIBE | WASHER | RONDELLE |
| 34 | 1000147672 | | 1,00 ST | FLANSCH | FLANGE | BRIDE |
| 35 | 1000015431 | | 4,00 ST | SCHEIBE | WASHER | RONDELLE |
| 36 | 1000019136 | | 4,00 ST | 6KT-SCHRAUBE | HEX SCREW | VIS À TÊTE HEXAGONALE |

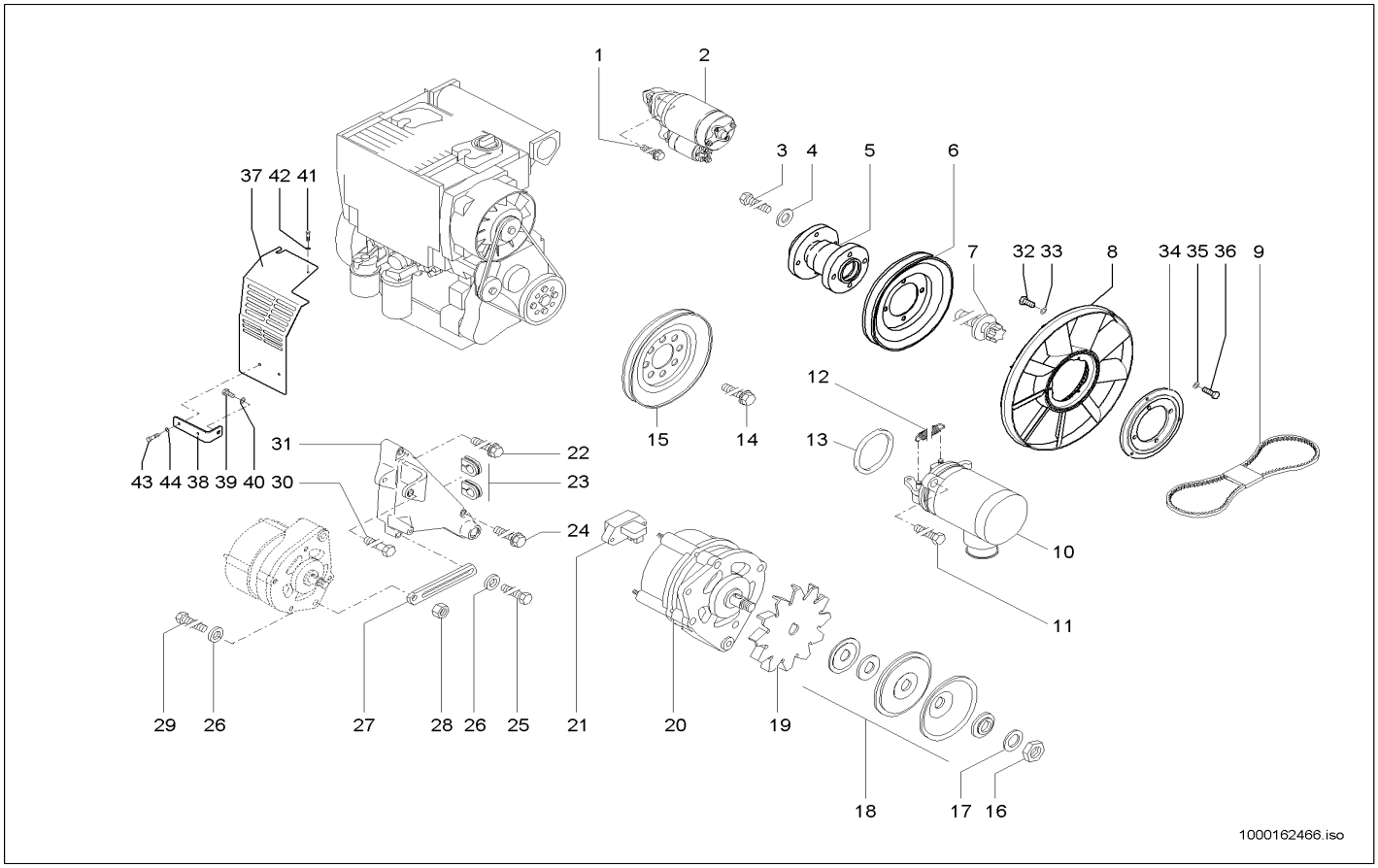


| Pos | Art.-Nr. | Anm. | Q'TY | BEZEICHNUNG | PART NAME | DESIGNATION |
|---|---|---|---|---|---|---|
| 1 | 1000108974 | | 2,00 ST | 6KT-SCHRAUBE | HEX SCREW | VIS À TÊTE HEXAGONALE |
| 2 | 1000108979 | | 1,00 ST | STARTER | STARTER | STARTER |
| 3 | 1000108849 | | 4,00 ST | 6KT-SCHRAUBE | HEX SCREW | VIS À TÊTE HEXAGONALE |
| 4 | 1000108951 | | 4,00 ST | SCHEIBE | WASHER | RONDELLE |
| 5 | 1000147672 | | 1,00 ST | FLANSCH | FLANGE | BRIDE |
| 6 | 1000108995 | | 1,00 ST | KEILRIEMENSCHEIBE | PULLEY | DISQUE DE COURROIE TRAPÉZOÏDALE |
| 7 | 1000087201 | | 4,00 ST | TORX-SCHRAUBE | TORX SCREW | VIS DE TORX |
| 8 | 1000135788 | | 1,00 ST | LÜFTERFLÜGEL | PROPELLER | AILE DU VENTILATEUR |
| 9 | 1000108958 | | 1,00 ST | KEILRIEMEN | V-BELT | COURROIE TRAPÉZOÏDALE |
| 10 | 1000129656 | | 1,00 ST | ABSTELLMOTOR | SHUT OFF MOTOR | MOTEUR D'ARRÊT |
| 11 | 1000108920 | | 2,00 ST | 6KT-SCHRAUBE | HEX SCREW | VIS À TÊTE HEXAGONALE |
| 12 | 1000086792 | | 1,00 ST | ZUGFEDER | TENSION SPRING | RESSORT DE TRACTION |
| 13 | 1000086704 | | 1,00 ST | O-RING | O-RING | ANNEAU EN O |
| 14 | 1000089376 | | 4,00 ST | 6KT-SCHRAUBE | HEX SCREW | VIS À TÊTE HEXAGONALE |
| 15 | 1000108986 | | 1,00 ST | KEILRIEMENSCHEIBE | PULLEY | DISQUE DE COURROIE TRAPÉZOÏDALE |
| 16 | 1000108921 | | 1,00 ST | 6KT-MUTTER | HEXAGON NUT | ÉCROU HEXAGONAL |
| 17 | 1000108846 | | 1,00 ST | FEDERSCHEIBE | SPRING RING | RONDELLE À RESSORT |
| 18 | 1000108962 | | 1,00 ST | KEILRIEMENSCHEIBE | PULLEY | DISQUE DE COURROIE TRAPÉZOÏDALE |
| 19 | 1000108954 | | 1,00 ST | LÜFTERRAD | VENTILATOR FAN | ROUE DE VENTILATEUR |
| 20 | 1000108966 | | 1,00 ST | GENERATOR | GENERATOR | GÉNÉRATEUR |
| 21 | 1000108959 | | 1,00 ST | SPANNUNGSREGLER | TENSION REGULATOR | RÉGULATEUR DE TENSION |
| 22 | 1000108978 | | 1,00 ST | 6KT-SCHRAUBE | HEX SCREW | VIS À TÊTE HEXAGONALE |
| 23 | 1000086774 | | 2,00 ST | GUMMIMUFFE | RUBBER SLEEVE | MANCHON EN CAOUTCHOUC |
| 24 | 1000108971 | | 1,00 ST | 6KT-SCHRAUBE | HEX SCREW | VIS À TÊTE HEXAGONALE |
| 25 | 1000108910 | | 1,00 ST | 6KT-SCHRAUBE | HEX SCREW | VIS À TÊTE HEXAGONALE |
| 26 | 1000108987 | | 2,00 ST | SCHEIBE | WASHER | RONDELLE |
| 27 | 1000108989 | | 1,00 ST | HALTERUNG | BRACKET | FIXATION |
| 28 | 1000108925 | | 1,00 ST | 6KT-MUTTER | HEXAGON NUT | ÉCROU HEXAGONAL |
| 29 | 1000108911 | | 1,00 ST | 6KT-SCHRAUBE | HEX SCREW | VIS À TÊTE HEXAGONALE |
| 30 | 1000108848 | | 1,00 ST | 6KT-SCHRAUBE | HEX SCREW | VIS À TÊTE HEXAGONALE |
| 31 | 1000109011 | | 1,00 ST | KONSOLE | CONSOLE | CONSOLE |
| 32 | 1000020553 | | 3,00 ST | 6KT-SCHRAUBE | HEX SCREW | VIS À TÊTE HEXAGONALE |
| 33 | 1000092290 | | 3,00 ST | SCHEIBE | WASHER | RONDELLE |
| 34 | 1000147672 | | 1,00 ST | FLANSCH | FLANGE | BRIDE |
| 35 | 1000015431 | | 4,00 ST | SCHEIBE | WASHER | RONDELLE |
| 36 | 1000019136 | | 4,00 ST | 6KT-SCHRAUBE | HEX SCREW | VIS À TÊTE HEXAGONALE |
| 37 | 1000157396 | Opt. | 1,00 ST | SCHUTZBLECH | PROTECTION PLATE | SUPPORT |
| 38 | 1000157406 | Opt. | 1,00 ST | HALTER | BRACKET CLUTCH | SUPPORT |
| 39 | 1000085411 | Opt. 10x20 | 1,00 ST | 6KT-SCHRAUBE | HEX SCREW | VIS À TÊTE HEXAGONALE |
| 40 | 1000092291 | Opt. | 1,00 ST | SCHEIBE | WASHER | RONDELLE |
| 41 | 1000015339 | Opt. 6x30 | 1,00 ST | 6KT-SCHRAUBE | HEX SCREW | VIS À TÊTE HEXAGONALE |
| 42 | 1000049219 | Opt. | 1,00 ST | SCHEIBE | WASHER | RONDELLE |
| 43 | 1000019136 | Opt. 8x16 | 2,00 ST | 6KT-SCHRAUBE | HEX SCREW | VIS À TÊTE HEXAGONALE |
| 44 | 1000015431 | Opt. | 2,00 ST | SCHEIBE | WASHER | RONDELLE |

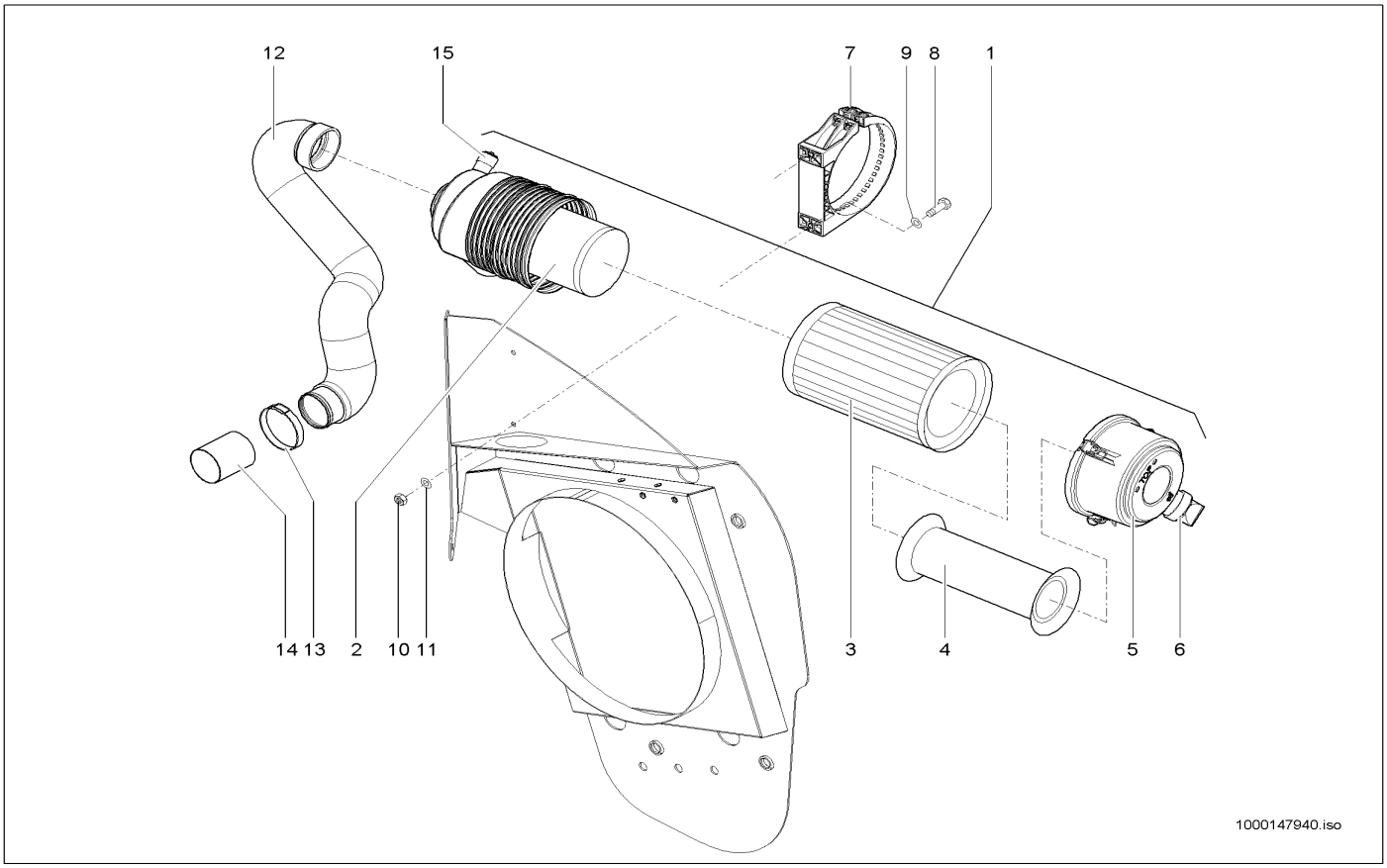


| Pos | Art.-Nr. | Anm. | Q'TY | BEZEICHNUNG | PART NAME | DESIGNATION |
|---|---|---|---|---|---|---|
| 1 | 1000032165 | | 1,00 ST | LUFTFILTER | AIR CLEANER | FILTRE À AIR |
| 2 | 1000035357 | | 1,00 ST | ROHR | PIPE LINE | TUYAU |
| 3 | 1000000365 | | 1,00 ST | FILTERPATRONE | FILTER CARTRIDGE | CARTOUCHE FILTRANTE |
| 4 | 1000087796 | | 1,00 ST | LUFTFILTEREINSATZ | AIRFILTER INSERT | CARTOUCHE FILTRANTE À AIR |
| 5 | 1000088788 | | 1,00 ST | DECKEL | COVER | COUVERCLE |
| 6 | 1000084971 | | 1,00 ST | STAUBAUSTRITTSVENTIL | DUSTEXHAUST VALVE | SOUPAPE DE SORTIE DE POUSSIÈRE |
| 7 | 1000031896 | | 1,00 ST | SCHELLE | CLAMP | BRIDE |
| 8 | 1000085390 | | 2,00 ST | 6KT-SCHRAUBE | HEX SCREW | VIS À TÊTE HEXAGONALE |
| 9 | 1000015431 | | 2,00 ST | SCHEIBE | WASHER | RONDELLE |
| 10 | 1000013022 | | 2,00 ST | 6KT-MUTTER | HEXAGON NUT | ÉCROU HEXAGONAL |
| 11 | 1000013027 | | 2,00 ST | SCHEIBE | WASHER | RONDELLE |
| 12 | 1000143194 | | 1,00 ST | FORMSCHLAUCH | PRESHAPED TUBE | TUYAU FLEXIBLE DE FORME |
| 13 | 1000032150 | | 3,00 ST | SCHELLE | CLAMP | BRIDE |
| 14 | 1000044109 | | 1,00 ST | ROHR | PIPE LINE | TUYAU |
| 15 | 1000104488 | | 1,00 ST | WARTUNGSANZEIGER | MAINTENANCE INDICATOR | INDICATUEUR DE MAINTENANCE |

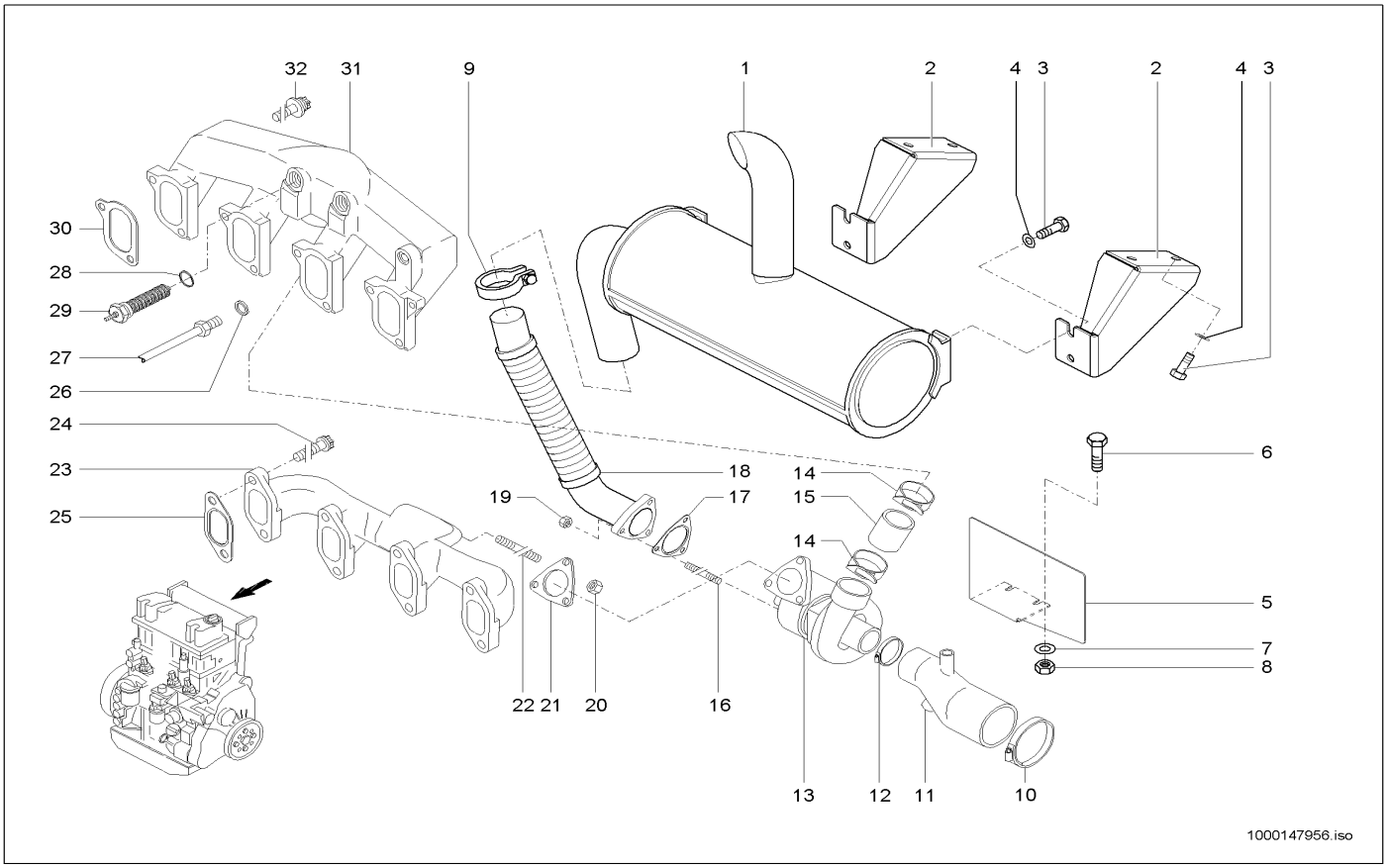


| Pos | Art.-Nr. | Anm. | Q'TY | BEZEICHNUNG | PART NAME | DESIGNATION |
|---|---|---|---|---|---|---|
| 1 | 1000112420 | | 1,00 ST | ABGASSCHALLDÄMPFER | EXHAUST SILENCER | SILENCIEUX D'ÉCHAPPEMENT |
| 2 | 1000134149 | | 2,00 ST | HALTERUNG | BRACKET | FIXATION |
| 3 | 1000085418 | | 8,00 ST | 6KT-SCHRAUBE | HEX SCREW | VIS À TÊTE HEXAGONALE |
| 4 | 1000049219 | | 8,00 ST | SCHEIBE | WASHER | RONDELLE |
| 5 | 1000146555 | | 1,00 ST | ABSCHIRMBLECH | PLATE | TÔLE BLINDÉ |
| 6 | 1000085384 | | 1,00 ST | 6KT-SCHRAUBE | HEX SCREW | VIS À TÊTE HEXAGONALE |
| 7 | 1000085588 | | 2,00 ST | 6KT-MUTTER | HEXAGON NUT | ÉCROU HEXAGONAL |
| 8 | 1000049283 | | 3,00 ST | LAGERSCHEIBE | BEARINGDISC | DISQUE DE PALIER |
| 9 | 1000145841 | | 1,00 ST | SCHELLE | CLAMP | BRIDE |
| 10 | 1000086707 | | 1,00 ST | SCHELLE | CLAMP | BRIDE |
| 11 | 1000131353 | | 1,00 ST | REDUZIERUNG | REDUCTION | RÉDUCTION |
| 12 | 1000086708 | | 1,00 ST | SCHELLE | CLAMP | BRIDE |
| 13 | 1000131354 | | 1,00 ST | ABGASTURBOLADER | TURBO CHARGER | TURBOCHARGEUR |
| 14 | 1000086722 | | 2,00 ST | SCHELLE | CLAMP | BRIDE |
| 15 | 1000108957 | | 1,00 ST | GUMMIMUFFE | RUBBER SLEEVE | MANCHON EN CAOUTCHOUC |
| 16 | 1000086430 | | 3,00 ST | STIFTSCHRAUBE | STUD | GOUJON |
| 17 | 1000086768 | | 1,00 ST | DICHTUNG | SEAL | JOINT D'ÉTANCHÉITÉ |
| 18 | 1000144626 | | 1,00 ST | ABGASLEITUNG | EXHAUST PIPE | LIGNE À GAZ D'ÉCHAPPEMENT |
| 19 | 1000086806 | | 3,00 ST | 6KT-MUTTER | HEXAGON NUT | ÉCROU HEXAGONAL |
| 20 | 1000108926 | | 3,00 ST | 6KT-MUTTER | HEXAGON NUT | ÉCROU HEXAGONAL |
| 21 | 1000086431 | | 1,00 ST | DICHTUNG | SEAL | JOINT D'ÉTANCHÉITÉ |
| 22 | 1000108953 | | 3,00 ST | 6KT-SCHRAUBE | HEX SCREW | VIS À TÊTE HEXAGONALE |
| 23 | 1000109039 | | 1,00 ST | AUSPUFFKRÜMMER | EXHAUST MANIFOLD | COUDE D'ÉCHAPPEMENT |
| 24 | 1000089375 | | 8,00 ST | TORX-SCHRAUBE | TORX SCREW | VIS DE TORX |
| 25 | 1000086428 | | 4,00 ST | DICHTUNG | SEAL | JOINT D'ÉTANCHÉITÉ |
| 26 | 1000108912 | | 1,00 ST | DICHTRING | SEAL RING | BAGUE D'ÉTANCHÉITÉ |
| 27 | 1000109035 | | 1,00 ST | SCHLAUCH | HOSE | TUYAU FLEXIBLE |
| 28 | 1000108917 | | 1,00 ST | DICHTRING | SEAL RING | BAGUE D'ÉTANCHÉITÉ |
| 29 | 1000108967 | | 1,00 ST | GLÜHKERZE | GLOW PLUG | BOUGIE DE RÉCHAUFFAGE |
| 30 | 1000087714 | | 4,00 ST | DICHTUNG | SEAL | JOINT D'ÉTANCHÉITÉ |
| 31 | 1000109017 | | 1,00 ST | SAUGROHR | SUCTION PIPE | TUBE ASPIRATEUR |
| 32 | 1000131352 | | 8,00 ST | SCHRAUBE | SCREW | VIS |

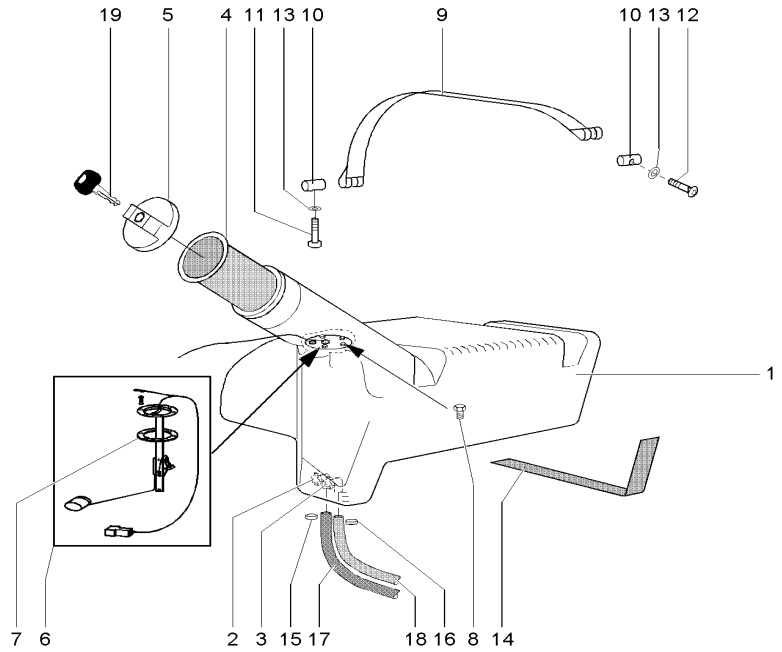


1000144125.iso

| Pos | Art.-Nr. | Anm. | Q'TY | BEZEICHNUNG | PART NAME | DESIGNATION |
|---|---|---|---|---|---|---|
| 1 | 1000035367 | | 1,00 ST | KRAFTSTOFFBEHÄLTER | FUEL TANK | RÉSERVOIR DE CARBURANT |
| 2 | 1000089633 | | 1,00 ST | STUTZEN | END PIECE | TUBULURE |
| 3 | 1000089637 | | 1,00 ST | STUTZEN | END PIECE | TUBULURE |
| 4 | 1000002983 | | 1,00 ST | EINFÜLLSIEB | SCREEN | CRIBLE |
| 5 | 1000098809 | | 1,00 ST | VERSCHLUSSDECKEL | LOCK COVER | COUVERCLE DE MÉCANISME DE FERMETURE |
| 6 | 1000133973 | | 1,00 ST | NIVEAUGEBER | LEVEL SENSOR | TRANSMETTEUR DE NIVEAU |
| 7 | 1000000335 | | 1,00 ST | DICHTUNG | SEAL | JOINT D'ÉTANCHÉITÉ |
| 8 | 1000085376 | | 6,00 ST | 6KT-SCHRAUBE | HEX SCREW | VIS À TÊTE HEXAGONALE |
| 9 | 1000031134 | | 2,00 ST | SPANNBAND | CLMAP STRAP | COLLIER TENDEUR |
| 10 | 1000030413 | | 4,00 ST | BOLZEN | PIN | AXE |
| 11 | 1000100527 | | 2,00 ST | FLACHRUNDSCHRAUBE | FLAT HEAD SCREW | VIS DE TÊTE PLATE |
| 12 | 1000085458 | | 2,00 ST | ZYLINDERSCHRAUBE | CHEESE HEAD SCREW | VIS A TETE CYLINDRIQUE |
| 13 | 1000092290 | | 2,00 ST | SCHEIBE | WASHER | RONDELLE |
| 14 | 1000033273 | | 2,00 ST | GUMMI | RUBBER | CAOUTCHOUC |
| 15 | 1000032138 | | 1,00 ST | SCHELLE | CLAMP | BRIDE |
| 16 | 1000032118 | | 1,00 ST | SCHELLE | CLAMP | BRIDE |
| 17 | 1000097035 | | 2,15 M | SCHLAUCH | HOSE | TUYAU FLEXIBLE |
| 18 | 1000097009 | | 2,05 M | SCHLAUCH | HOSE | TUYAU FLEXIBLE |
| 19 | 1000000459 | | 1,00 ST | SCHLÜSSEL | KEY | CLÉ |

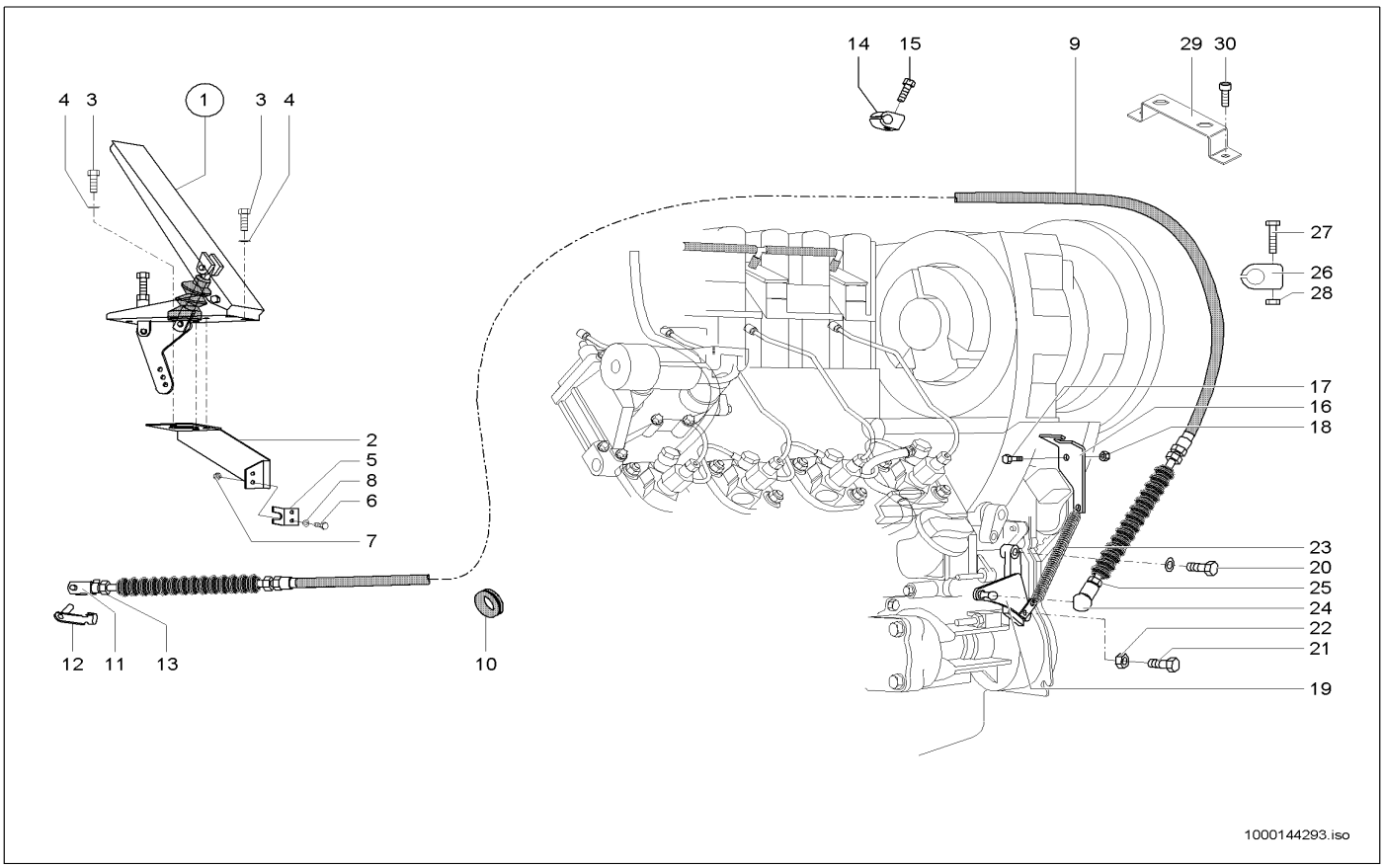


| Pos | Art.-Nr. | Anm. | Q'TY | BEZEICHNUNG | PART NAME | DESIGNATION |
|---|---|---|---|---|---|---|
| 1 | 1000036693 | | 1,00 ST | GASPEDAL | ACCELERATOR PEDAL | ACCÉLÉRATEUR |
| 2 | 1000086956 | | 1,00 ST | HALTER | BRACKET CLUTCH | SUPPORT |
| 3 | 1000020553 | | 6,00 ST | 6KT-SCHRAUBE | HEX SCREW | VIS À TÊTE HEXAGONALE |
| 4 | 1000049283 | | 6,00 ST | LAGERSCHEIBE | BEARINGDISC | DISQUE DE PALIER |
| 5 | 1000043506 | | 1,00 ST | WIDERLAGER | ABUTMENT | CULÉE |
| 6 | 1000085378 | | 2,00 ST | 6KT-SCHRAUBE | HEX SCREW | VIS À TÊTE HEXAGONALE |
| 7 | 1000085587 | | 2,00 ST | 6KT-MUTTER | HEXAGON NUT | ÉCROU HEXAGONAL |
| 8 | 1000095342 | | 2,00 ST | SCHEIBE | WASHER | RONDELLE |
| 9 | 1000022264 | | 1,00 ST | SEILZUG | CABLE PULL | APPEL D'UN CORDAGE |
| 10 | 1000033427 | | 1,00 ST | DURCHFÜHRUNGSRING | JUNCTION | ANNEAU D'APPLICATION |
| 11 | 1000050548 | | 1,00 ST | GABELKOPF | FORK HEAD | TÊTE DE ATTACHE RAPIDE |
| 12 | 1000030631 | | 1,00 ST | ES-BOLZEN | PIN | AXE |
| 13 | 1000015405 | | 1,00 ST | 6KT-MUTTER | HEXAGON NUT | ÉCROU HEXAGONAL |
| 14 | 1000032397 | | 1,00 ST | SCHELLE | CLAMP | BRIDE |
| 15 | 1000015339 | | 1,00 ST | 6KT-SCHRAUBE | HEX SCREW | VIS À TÊTE HEXAGONALE |
| 16 | 1000114398 | | 1,00 ST | WIDERLAGER | ABUTMENT | CULÉE |
| 17 | 1000013008 | | 1,00 ST | 6KT-SCHRAUBE | HEX SCREW | VIS À TÊTE HEXAGONALE |
| 18 | 1000013022 | | 1,00 ST | 6KT-MUTTER | HEXAGON NUT | ÉCROU HEXAGONAL |
| 19 | 1000043504 | | 1,00 ST | HEBEL | LEVER | LEVIER |
| 20 | 1000085382 | | 1,00 ST | 6KT-SCHRAUBE | HEX SCREW | VIS À TÊTE HEXAGONALE |
| 21 | 1000085384 | | 1,00 ST | 6KT-SCHRAUBE | HEX SCREW | VIS À TÊTE HEXAGONALE |
| 22 | 1000015405 | | 1,00 ST | 6KT-MUTTER | HEXAGON NUT | ÉCROU HEXAGONAL |
| 23 | 1000031048 | | 1,00 ST | ZUGFEDER | TENSION SPRING | RESSORT DE TRACTION |
| 24 | 1000050570 | | 1,00 ST | WINKELGELENK | BALL AND SOCKET | ARTICULATION ANGULAIRE |
| 25 | 1000085588 | | 1,00 ST | 6KT-MUTTER | HEXAGON NUT | ÉCROU HEXAGONAL |
| 26 | 1000032397 | | 1,00 ST | SCHELLE | CLAMP | BRIDE |
| 27 | 1000085382 | | 1,00 ST | 6KT-SCHRAUBE | HEX SCREW | VIS À TÊTE HEXAGONALE |
| 28 | 1000085588 | | 1,00 ST | 6KT-MUTTER | HEXAGON NUT | ÉCROU HEXAGONAL |
| 29 | 1000143515 | | 1,00 ST | BÜGEL | HOLDER | ARCHET |
| 30 | 1000085455 | | 2,00 ST | ZYLINDERSCHRAUBE | CHEESE HEAD SCREW | VIS A TETE CYLINDRIQUE |

# HANDGAS
# MANNUAL THROTTLE ATTACHMENT
# ACCÉLÉRATEUR Á MAIN FIXATION

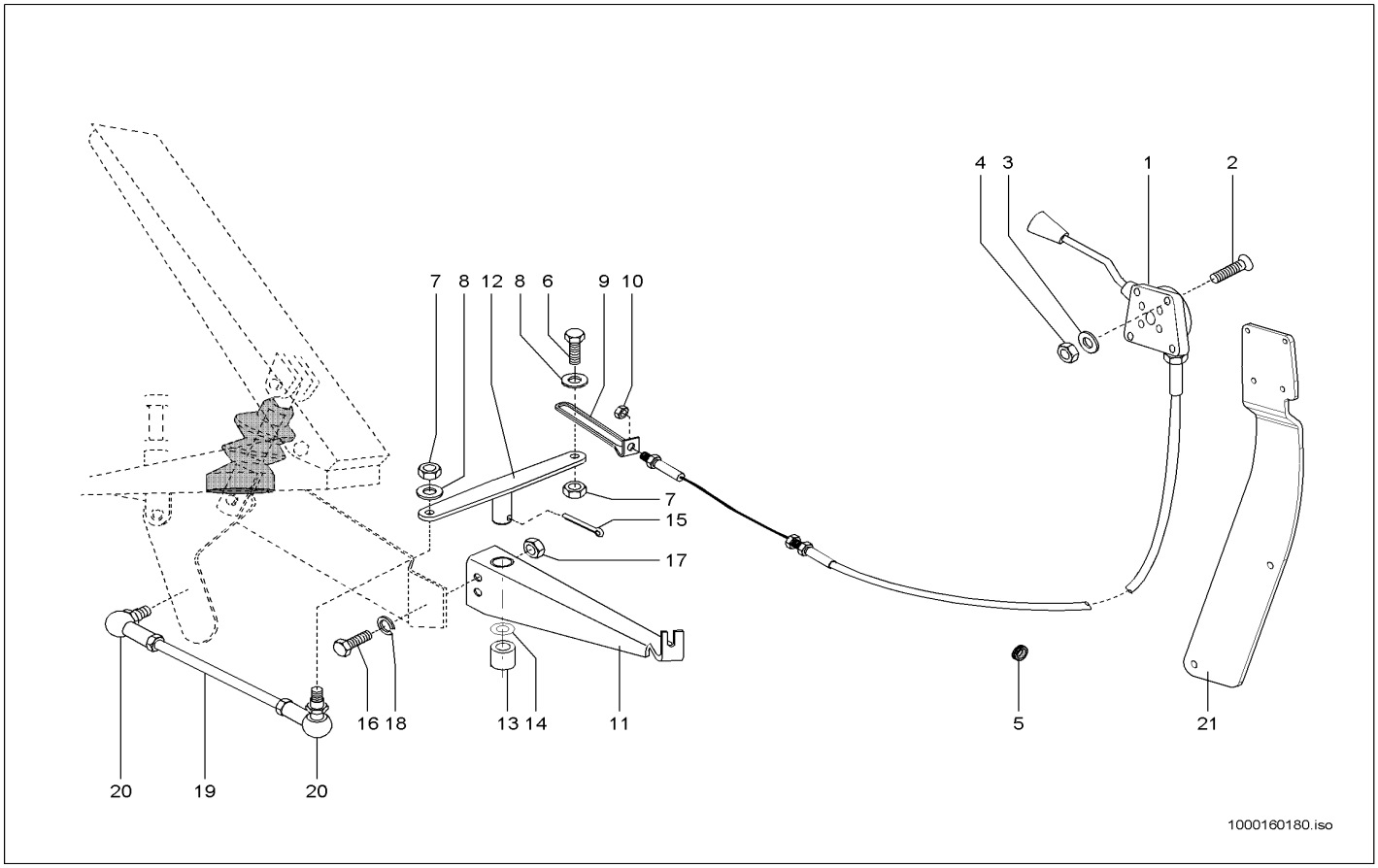


| Pos | Art.-Nr. | Anm. | Q'TY | BEZEICHNUNG | PART NAME | DESIGNATION |
|---|---|---|---|---|---|---|
| 1 | 1000109525 | | 1,00 ST | BETÄTIGUNGSHEBEL KPL. | MANUAL THROTTLE KPL. B-10 | MANETTE D'ACCÉLÉRATEUR KPL. B-10 |
| 2 | 1000110008 | | 4,00 ST | SENKSCHRAUBE | SINKSCREW | VIS À TÊTE NOYÉE |
| 3 | 1000049283 | | 4,00 ST | LAGERSCHEIBE | BEARINGDISC | DISQUE DE PALIER |
| 4 | 1000085588 | | 4,00 ST | 6KT-MUTTER | HEXAGON NUT | ÉCROU HEXAGONAL |
| 5 | 1000096024 | | 1,00 ST | DURCHFÜHRUNGSRING | JUNCTION | ANNEAU D'APPLICATION |
| 6 | 1000015389 | | 1,00 ST | ZYLINDERSCHRAUBE | CHEESE HEAD SCREW | VIS A TETE CYLINDRIQUE |
| 7 | 1000015405 | | 2,00 ST | 6KT-MUTTER | HEXAGON NUT | ÉCROU HEXAGONAL |
| 8 | 1000049283 | | 2,00 ST | LAGERSCHEIBE | BEARINGDISC | DISQUE DE PALIER |
| 9 | 1000046226 | | 1,00 ST | ÖSE | EYE | ANNEAU |
| 10 | 1000015405 | | 1,00 ST | 6KT-MUTTER | HEXAGON NUT | ÉCROU HEXAGONAL |
| 11 | 1000045303 | | 1,00 ST | LAGERUNG | MOUNTING | STOCKAGE |
| 12 | 1000045302 | | 1,00 ST | HEBEL | LEVER | LEVIER |
| 13 | 1000032469 | | 1,00 ST | GLEITLAGER | SLIDE BEARING | PALIER LISSE |
| 14 | 1000092291 | | 1,00 ST | SCHEIBE | WASHER | RONDELLE |
| 15 | 1000095365 | | 1,00 ST | SPLINT | COTTERPIN | GOUPILLE |
| 16 | 1000085382 | | 1,00 ST | 6KT-SCHRAUBE | HEX SCREW | VIS À TÊTE HEXAGONALE |
| 17 | 1000085588 | | 1,00 ST | 6KT-MUTTER | HEXAGON NUT | ÉCROU HEXAGONAL |
| 18 | 1000049283 | | 1,00 ST | LAGERSCHEIBE | BEARINGDISC | DISQUE DE PALIER |
| 19 | 1000045305 | | 1,00 ST | GESTÄNGE | LIKAGE | TIGES |
| 20 | 1000050570 | | 2,00 ST | WINKELGELENK | BALL AND SOCKET | ARTICULATION ANGULAIRE |
| 21 | 1000147720 | | 1,00 ST | HALTER | BRACKET CLUTCH | SUPPORT |

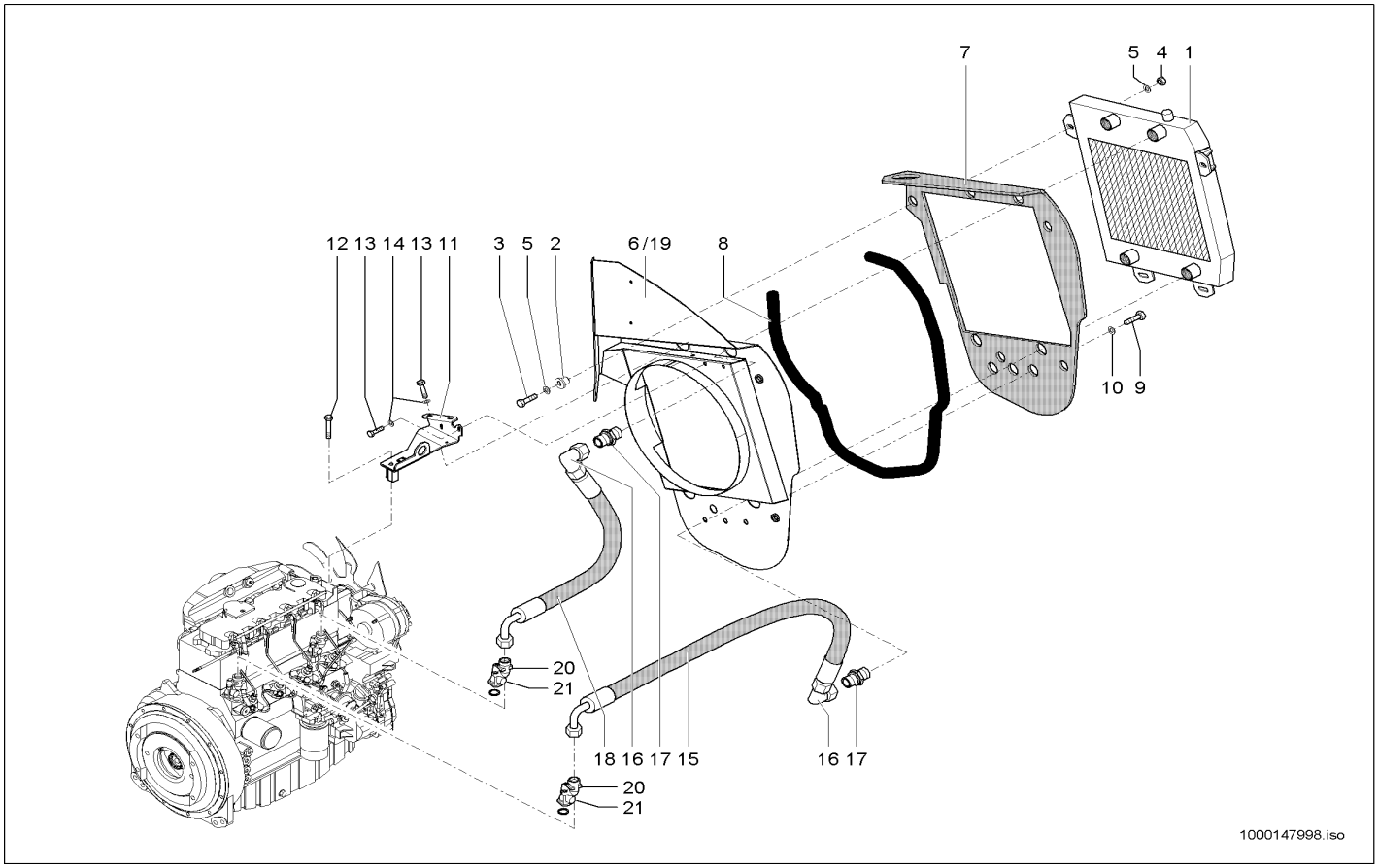


| Pos | Art.-Nr. | Anm. | Q'TY | BEZEICHNUNG | PART NAME | DESIGNATION |
|---|---|---|---|---|---|---|
| 1 | 1000098907 | | 1,00 ST | KOMBIKÜHLER | COMBICOOLER | RADIATEUR UNIVERSEL |
| 2 | 1000031210 | | 4,00 ST | LAGER | BEARING | PALIER |
| 3 | 1000085412 | | 4,00 ST | 6KT-SCHRAUBE | HEX SCREW | VIS À TÊTE HEXAGONALE |
| 4 | 1000015407 | | 4,00 ST | 6KT-MUTTER | HEXAGON NUT | ÉCROU HEXAGONAL |
| 5 | 1000092303 | | 12,00 ST | SCHEIBE 10,5 ST A2C | WASHER 10,5 ST A2C | RONDELLE 10,5 ST A2C |
| 6 | 1000143267 | A:347010060 | 1,00 ST | TRENNBLECH | SEPERATING SHEET | TÔLE DE SÉPERATION |
| 7 | 1000143623 | | 1,00 ST | DÄMMATTE | INSULATING MAT | TAPIS ISOLANT |
| 8 | 1000097040 | | 3,20 M | PROFIL | PROFILE | PROFIL |
| 9 | 1000085417 | | 3,00 ST | 6KT-SCHRAUBE | HEX SCREW | VIS À TÊTE HEXAGONALE |
| 10 | 1000049285 | | 3,00 ST | SCHEIBE | WASHER | RONDELLE |
| 11 | 1000116326 | | 1,00 ST | HALTER | BRACKET CLUTCH | SUPPORT |
| 12 | 1000047395 | | 1,00 ST | 6KT-SCHRAUBE | HEX SCREW | VIS À TÊTE HEXAGONALE |
| 13 | 1000015343 | | 4,00 ST | 6KT-SCHRAUBE | HEX SCREW | VIS À TÊTE HEXAGONALE |
| 14 | 1000013027 | | 4,00 ST | SCHEIBE | WASHER | RONDELLE |
| 15 | 1000103831 | | 1,00 ST | HYDRAULIKSCHLAUCH | HP HOSE | TUYAU FLEXIBLE HYDRAULIQUE |
| 16 | 1000020261 | | 2,00 ST | VERSCHRAUBUNG | SCREW JOINT | RACCORD UNION |
| 17 | 1000085056 | | 2,00 ST | VERSCHRAUBUNG | SCREW JOINT | RACCORD UNION |
| 18 | 1000104825 | | 1,00 ST | HYDRAULIKSCHLAUCH | HP HOSE | TUYAU FLEXIBLE HYDRAULIQUE |
| 19 | 1000151602 | E:347010061 | 1,00 ST | TRENNBLECH | SEPERATING SHEET | TÔLE DE SÉPERATION |
| 20 | 1000087658 | | 2,00 ST | KÜHLERANSCHLUSS | COOLER CONNECTION | CONNEXION DE RADIATEUR |
| 21 | 1000087423 | | 2,00 ST | DICHTRING | SEAL RING | BAGUE D'ÉTANCHÉITÉ |

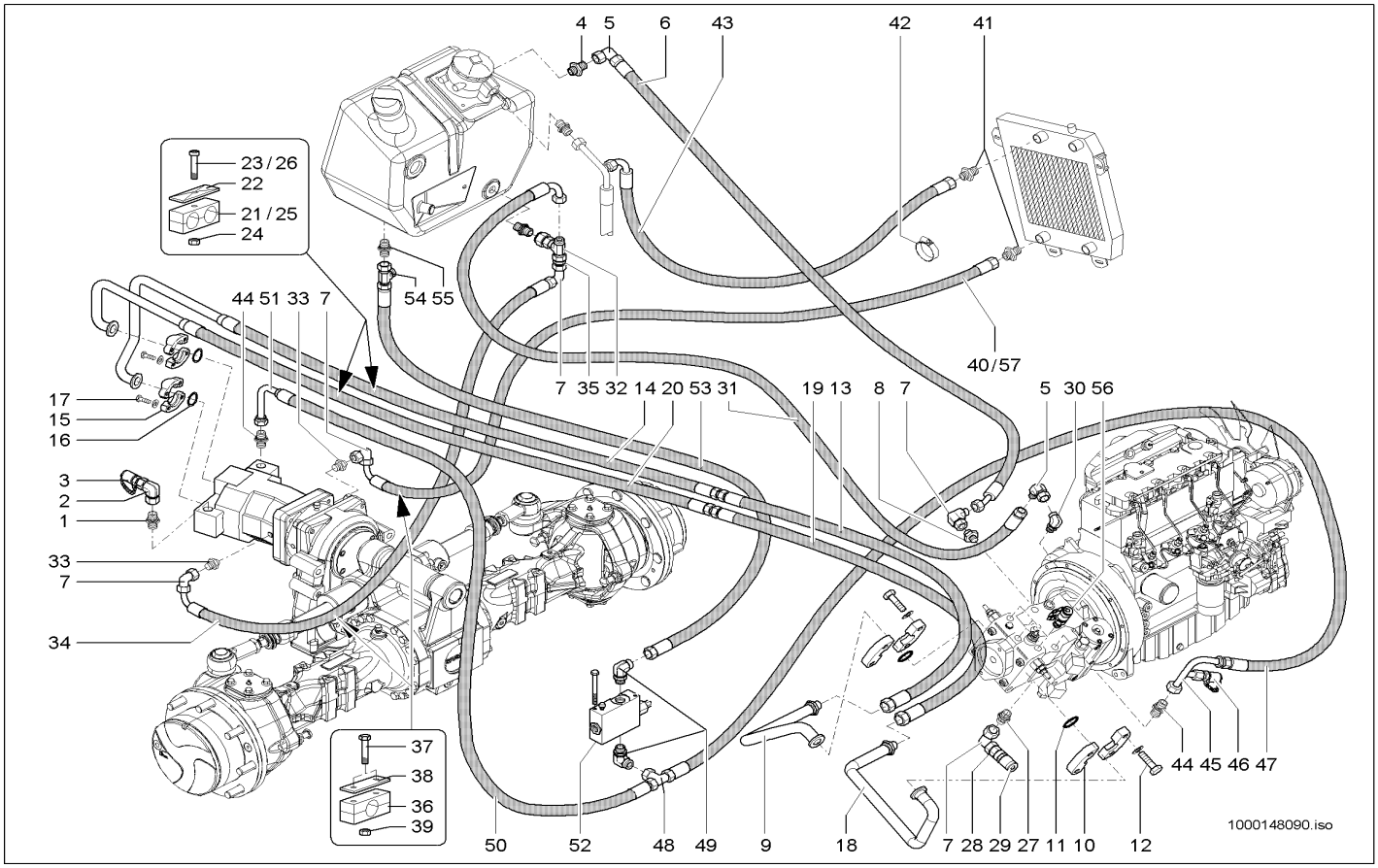


| Pos | Art.-Nr. | Anm. | Q'TY | BEZEICHNUNG | PART NAME | DESIGNATION |
|---|---|---|---|---|---|---|
| 1 | 1000000577 | | 1,00 ST | VERSCHRAUBUNG | SCREW JOINT | RACCORD UNION |
| 2 | 1000000542 | | 1,00 ST | VERSCHRAUBUNG | SCREW JOINT | RACCORD UNION |
| 3 | 1000000575 | | 1,00 ST | MINIMESSANSCHLUSS | MINIMESS POINT | CONNEXION DE MINI MESURAGE |
| 4 | 1000100732 | | 1,00 ST | VERSCHRAUBUNG | SCREW JOINT | RACCORD UNION |
| 5 | 1000020261 | | 1,00 ST | VERSCHRAUBUNG | SCREW JOINT | RACCORD UNION |
| 6 | 1000144652 | | 1,00 ST | HYDRAULIKSCHLAUCH | HP HOSE | TUYAU FLEXIBLE HYDRAULIQUE |
| 7 | 1000015513 | | 1,00 ST | VERSCHRAUBUNG | SCREW JOINT | RACCORD UNION |
| 8 | 1000028323 | | 1,00 ST | VERSCHRAUBUNG | SCREW JOINT | RACCORD UNION |
| 9 | 1000169184 | | 1,00 ST | ROHRLEITUNG | PIPE LINE | TUYAU |
| 10 | 1000028689 | | 4,00 ST | FLANSCHHÄLFTE | HALF FLANGE | DEMI-BRIDE |
| 11 | 1000090485 | | 2,00 ST | O-RING | O-RING | ANNEAU EN O |
| 12 | 1000015346 | | 8,00 ST | 6KT-SCHRAUBE | HEX SCREW | VIS À TÊTE HEXAGONALE |
| 13 | 1000135814 | | 1,00 ST | HYDRAULIKSCHLAUCH | HP HOSE | TUYAU FLEXIBLE HYDRAULIQUE |
| 14 | 1000144572 | | 1,00 ST | HYDRAULIKSCHLAUCH | HP HOSE | TUYAU FLEXIBLE HYDRAULIQUE |
| 15 | 1000028694 | | 4,00 ST | FLANSCHHÄLFTE | HALF FLANGE | DEMI-BRIDE |
| 16 | 1000020772 | | 2,00 ST | O-RING | O-RING | ANNEAU EN O |
| 17 | 1000032990 | | 8,00 ST | SCHRAUBE | SCREW | VIS |
| 18 | 1000169185 | | 1,00 ST | ROHRLEITUNG | PIPE LINE | TUYAU |
| 19 | 1000135815 | | 1,00 ST | HYDRAULIKSCHLAUCH | HP HOSE | TUYAU FLEXIBLE HYDRAULIQUE |
| 20 | 1000144573 | | 1,00 ST | HYDRAULIKSCHLAUCH | HP HOSE | TUYAU FLEXIBLE HYDRAULIQUE |
| 21 | 1000032359 | 35,0/35,0 | 1,00 ST | SCHELLE | CLAMP | BRIDE |
| 22 | 1000031631 | | 2,00 ST | DECKPLATTE | COVER PLATE | PLAQUE DE RECOUVREMENT |
| 23 | 1000048174 | 8x75 | 1,00 ST | ZYLINDERSCHRAUBE | CHEESE HEAD SCREW | VIS A TETE CYLINDRIQUE |
| 24 | 1000013022 | | 2,00 ST | 6KT-MUTTER | HEXAGON NUT | ÉCROU HEXAGONAL |
| 25 | 1000100565 | | 1,00 ST | DOPPELSCHELLE | DOUBLE CLAMP | DOUBLE BRIDE |
| 26 | 1000085465 | 8x60 | 1,00 ST | ZYLINDERSCHRAUBE | CHEESE HEAD SCREW | VIS A TETE CYLINDRIQUE |
| 27 | 1000085104 | | 1,00 ST | VERSCHRAUBUNG | SCREW JOINT | RACCORD UNION |
| 28 | 1000028337 | | 1,00 ST | REDUZIERUNG | REDUCTION | RÉDUCTION |
| 29 | 1000028095 | | 1,00 ST | ABLAßKUPPLUNG | DRAIN COUPLING | COUPLEUR DE PURGE |
| 30 | 1000102939 | | 1,00 ST | VERSCHRAUBUNG | SCREW JOINT | RACCORD UNION |
| 31 | 1000144639 | | 1,00 ST | HYDRAULIKSCHLAUCH | HP HOSE | TUYAU FLEXIBLE HYDRAULIQUE |
| 32 | 1000085124 | | 1,00 ST | VERSCHRAUBUNG | SCREW JOINT | RACCORD UNION |
| 33 | 1000085088 | | 2,00 ST | VERSCHRAUBUNG | SCREW JOINT | RACCORD UNION |
| 34 | 1000146246 | | 1,00 ST | HYDRAULIKSCHLAUCH | HP HOSE | TUYAU FLEXIBLE HYDRAULIQUE |
| 35 | 1000028177 | | 1,00 ST | VERSCHRAUBUNG | SCREW JOINT | RACCORD UNION |
| 36 | 1000141576 | 26,9 PP | 2,00 ST | SCHELLE | CLAMP | BRIDE |
| 37 | 1000085312 | | 4,00 ST | 6KT-SCHRAUBE | HEX SCREW | VIS À TÊTE HEXAGONALE |
| 38 | 1000031685 | | 4,00 ST | DECKPLATTE | COVER PLATE | PLAQUE DE RECOUVREMENT |
| 39 | 1000085588 | | 4,00 ST | 6KT-MUTTER | HEXAGON NUT | ÉCROU HEXAGONAL |
| 40 | 1000136059 | A:347010119 | 1,00 ST | HYDRAULIKSCHLAUCH | HP HOSE | TUYAU FLEXIBLE HYDRAULIQUE |
| 41 | 1000028300 | | 2,00 ST | VERSCHRAUBUNG | SCREW JOINT | RACCORD UNION |
| 42 | 1000031691 | D 28 | 1,00 ST | SCHELLE | CLAMP | BRIDE |
| 43 | 1000144651 | | 1,00 ST | HYDRAULIKSCHLAUCH | HP HOSE | TUYAU FLEXIBLE HYDRAULIQUE |
| 44 | 1000085078 | | 2,00 ST | VERSCHRAUBUNG | SCREW JOINT | RACCORD UNION |
| 45 | 1000051048 | | 1,00 ST | ANSCHLUSSSTÜCK | CONNECTION PIECE | PIÈCE DE CONNEXION |
| 46 | 1000028660 | | 1,00 ST | MINIMESSANSCHLUSS | MINIMESS POINT | CONNEXION DE MINI MESURAGE |

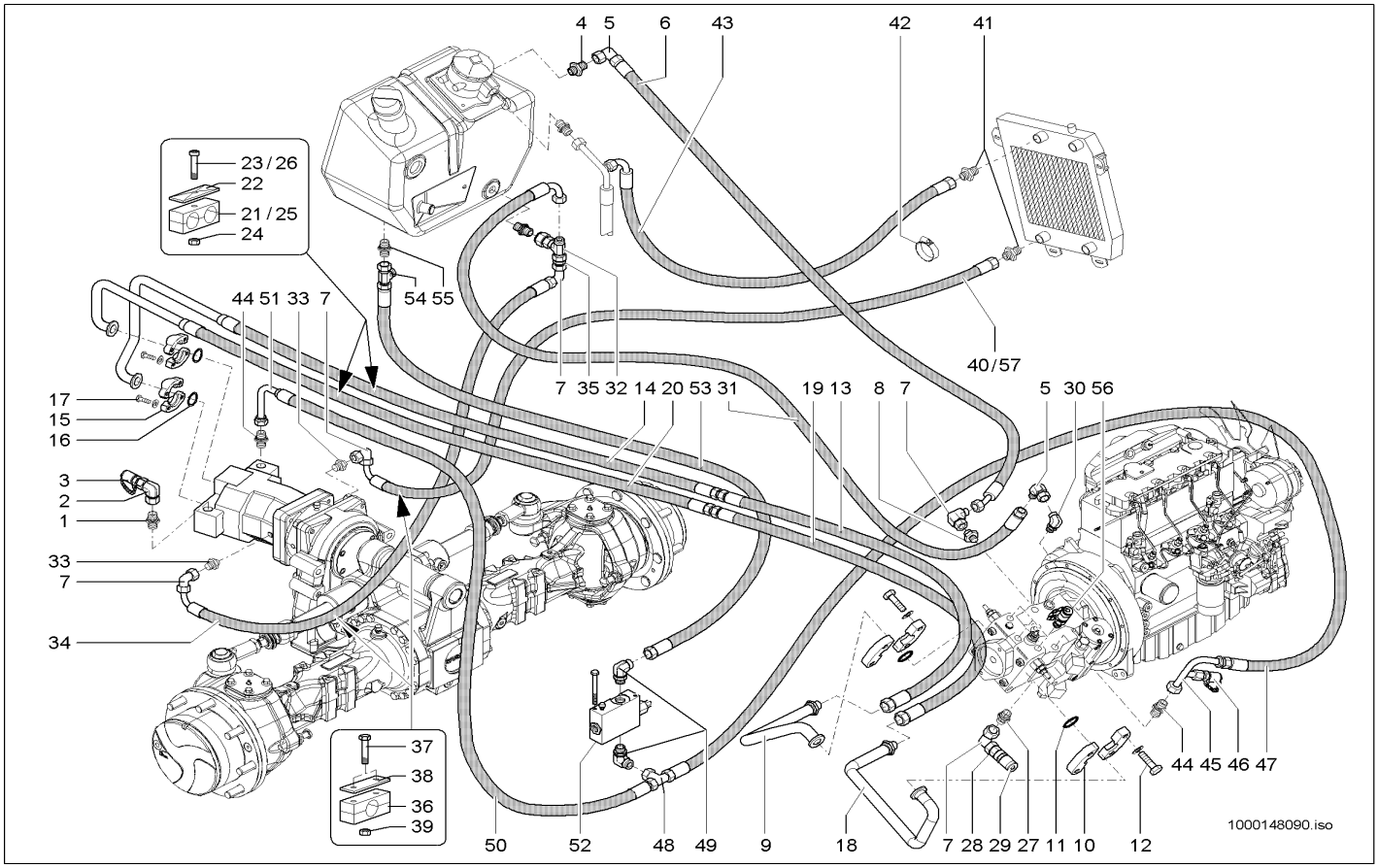


| Pos | Art.-Nr. | Anm. | Q'TY | BEZEICHNUNG | PART NAME | DESIGNATION |
|---|---|---|---|---|---|---|
| 47 | 1000114039 | | 1,00 ST | HYDRAULIKSCHLAUCH | HP HOSE | TUYAU FLEXIBLE HYDRAULIQUE |
| 48 | 1000015519 | | 1,00 ST | VERSCHRAUBUNG | SCREW JOINT | RACCORD UNION |
| 49 | 1000028478 | | 2,00 ST | VERSCHRAUBUNG | SCREW JOINT | RACCORD UNION |
| 50 | 1000144638 | | 1,00 ST | HYDRAULIKSCHLAUCH | HP HOSE | TUYAU FLEXIBLE HYDRAULIQUE |
| 51 | 1000051026 | | 1,00 ST | ANSCHLUSSSTÜCK | CONNECTION PIECE | PIÈCE DE CONNEXION |
| 52 | 1000052099 | | 1,00 ST | INCHVENTIL | INCHING VALVE | SOUPAPE D'INCH |
| 53 | 1000098319 | | 1,00 ST | HYDRAULIKSCHLAUCH | HP HOSE | TUYAU FLEXIBLE HYDRAULIQUE |
| 54 | 1000015516 | | 1,00 ST | VERSCHRAUBUNG | SCREW JOINT | RACCORD UNION |
| 55 | 1000028596 | | 1,00 ST | VERSCHRAUBUNG | SCREW JOINT | RACCORD UNION |
| 56 | 1000028224 | | 3,00 ST | MINIMESSANSCHLUSS | MINIMESS POINT | CONNEXION DE MINI MESURAGE |
| 57 | 1000158880 | E:347010120 | 1,00 ST | HYDRAULIKSCHLAUCH | HP HOSE | TUYAU FLEXIBLE HYDRAULIQUE |

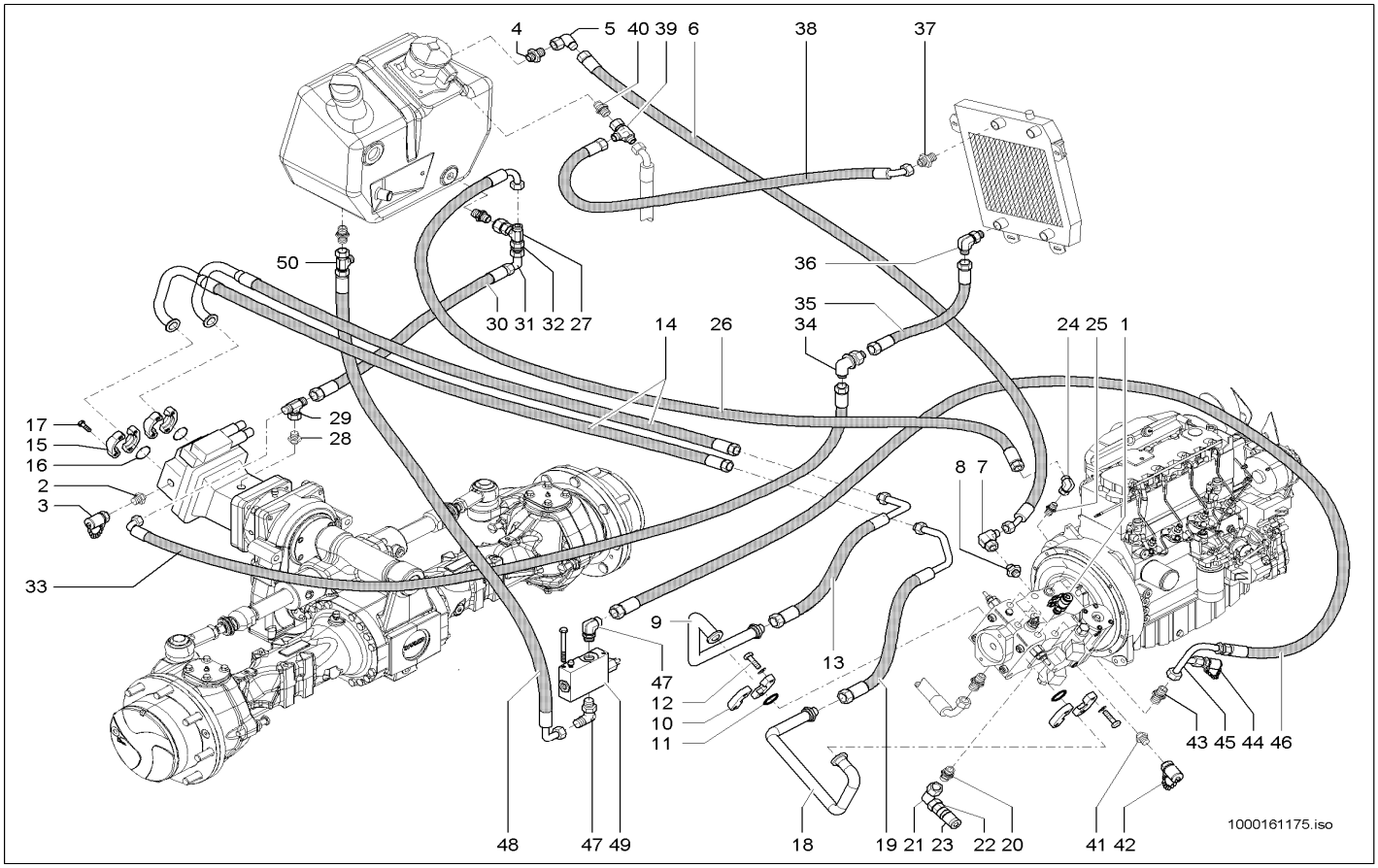


| Pos | Art.-Nr. | Anm. | Q'TY | BEZEICHNUNG | PART NAME | DESIGNATION |
|---|---|---|---|---|---|---|
| 1 | 1000000559 | | 2,00 ST | MINIMESSANSCHLUSS | MINIMESS POINT | CONNEXION DE MINI MESURAGE |
| 2 | 1000000577 | | 2,00 ST | VERSCHRAUBUNG | SCREW JOINT | RACCORD UNION |
| 3 | 1000000575 | | 1,00 ST | MINIMESSANSCHLUSS | MINIMESS POINT | CONNEXION DE MINI MESURAGE |
| 4 | 1000100732 | | 1,00 ST | VERSCHRAUBUNG | SCREW JOINT | RACCORD UNION |
| 5 | 1000020261 | | 1,00 ST | VERSCHRAUBUNG | SCREW JOINT | RACCORD UNION |
| 6 | 1000157685 | | 1,00 ST | HYDRAULIKSCHLAUCH | HP HOSE | TUYAU FLEXIBLE HYDRAULIQUE |
| 7 | 1000020261 | | 1,00 ST | VERSCHRAUBUNG | SCREW JOINT | RACCORD UNION |
| 8 | 1000157520 | | 1,00 ST | VERSCHRAUBUNG | SCREW JOINT | RACCORD UNION |
| 9 | 1000157660 | | 1,00 ST | ROHRLEITUNG | PIPE LINE | TUYAU |
| 10 | 1000028694 | | 4,00 ST | FLANSCHHÄLFTE | HALF FLANGE | DEMI-BRIDE |
| 11 | 1000020772 | | 2,00 ST | O-RING | O-RING | ANNEAU EN O |
| 12 | 1000032990 | | 8,00 ST | SCHRAUBE | SCREW | VIS |
| 13 | 1000135814 | | 1,00 ST | HYDRAULIKSCHLAUCH | HP HOSE | TUYAU FLEXIBLE HYDRAULIQUE |
| 14 | 1000155834 | | 2,00 ST | HYDRAULIKSCHLAUCH | HP HOSE | TUYAU FLEXIBLE HYDRAULIQUE |
| 15 | 1000028222 | | 4,00 ST | FLANSCHHÄLFTE | HALF FLANGE | DEMI-BRIDE |
| 16 | 1000155832 | | 2,00 ST | O-RING | O-RING | ANNEAU EN O |
| 17 | 1000157421 | | 8,00 ST | 6KT-SCHRAUBE | HEX SCREW | VIS À TÊTE HEXAGONALE |
| 18 | 1000157659 | | 1,00 ST | ROHRLEITUNG | PIPE LINE | TUYAU |
| 19 | 1000135815 | | 1,00 ST | HYDRAULIKSCHLAUCH | HP HOSE | TUYAU FLEXIBLE HYDRAULIQUE |
| 20 | 1000085056 | | 1,00 ST | VERSCHRAUBUNG | SCREW JOINT | RACCORD UNION |
| 21 | 1000020261 | | 1,00 ST | VERSCHRAUBUNG | SCREW JOINT | RACCORD UNION |
| 22 | 1000028337 | | 1,00 ST | REDUZIERUNG | REDUCTION | RÉDUCTION |
| 23 | 1000028095 | | 1,00 ST | ABLAßKUPPLUNG | DRAIN COUPLING | COUPLEUR DE PURGE |
| 24 | 1000085056 | | 1,00 ST | VERSCHRAUBUNG | SCREW JOINT | RACCORD UNION |
| 25 | 1000020261 | | 1,00 ST | VERSCHRAUBUNG | SCREW JOINT | RACCORD UNION |
| 26 | 1000157689 | | 1,00 ST | HYDRAULIKSCHLAUCH | HP HOSE | TUYAU FLEXIBLE HYDRAULIQUE |
| 27 | 1000085124 | | 1,00 ST | VERSCHRAUBUNG | SCREW JOINT | RACCORD UNION |
| 28 | 1000085056 | | 1,00 ST | VERSCHRAUBUNG | SCREW JOINT | RACCORD UNION |
| 29 | 1000085124 | | 1,00 ST | VERSCHRAUBUNG | SCREW JOINT | RACCORD UNION |
| 30 | 1000147623 | | 1,00 ST | HYDRAULIKSCHLAUCH | HP HOSE | TUYAU FLEXIBLE HYDRAULIQUE |
| 31 | 1000101308 | | 1,00 ST | VERSCHRAUBUNG | SCREW JOINT | RACCORD UNION |
| 32 | 1000101005 | | 1,00 ST | VERSCHRAUBUNG | SCREW JOINT | RACCORD UNION |
| 33 | 1000157684 | | 1,00 ST | HYDRAULIKSCHLAUCH | HP HOSE | TUYAU FLEXIBLE HYDRAULIQUE |
| 34 | 1000100737 | | 1,00 ST | WSV22LA3C | WSV22LA3C | WSV22LA3C |
| 35 | 1000157683 | | 1,00 ST | HYDRAULIKSCHLAUCH | HP HOSE | TUYAU FLEXIBLE HYDRAULIQUE |
| 36 | 1000126604 | | 1,00 ST | EWE45°22-LM 26X1,5 A3C | EWE45°22-LM 26X1,5 A3C | RACCORD VISSÉ 45° EWE 10LM 18X1,5 A3C |
| 37 | 1000085056 | | 1,00 ST | VERSCHRAUBUNG | SCREW JOINT | RACCORD UNION |
| 38 | 1000157682 | | 1,00 ST | HYDRAULIKSCHLAUCH | HP HOSE | TUYAU FLEXIBLE HYDRAULIQUE |
| 39 | 1000085110 | | 1,00 ST | VERSCHRAUBUNG | SCREW JOINT | RACCORD UNION |
| 40 | 1000085107 | | 1,00 ST | VERSCHRAUBUNG | SCREW JOINT | RACCORD UNION |
| 41 | 1000085046 | | 1,00 ST | VERSCHRAUBUNG | SCREW JOINT | RACCORD UNION |
| 42 | 1000000575 | | 1,00 ST | MINIMESSANSCHLUSS | MINIMESS POINT | CONNEXION DE MINI MESURAGE |
| 43 | 1000015519 | | 1,00 ST | VERSCHRAUBUNG | SCREW JOINT | RACCORD UNION |
| 44 | 1000028507 | | 1,00 ST | MINIMESSANSCHLUSS | MINIMESS POINT | CONNEXION DE MINI MESURAGE |
| 45 | 1000051026 | | 1,00 ST | ANSCHLUSSSTÜCK | CONNECTION PIECE | PIÈCE DE CONNEXION |

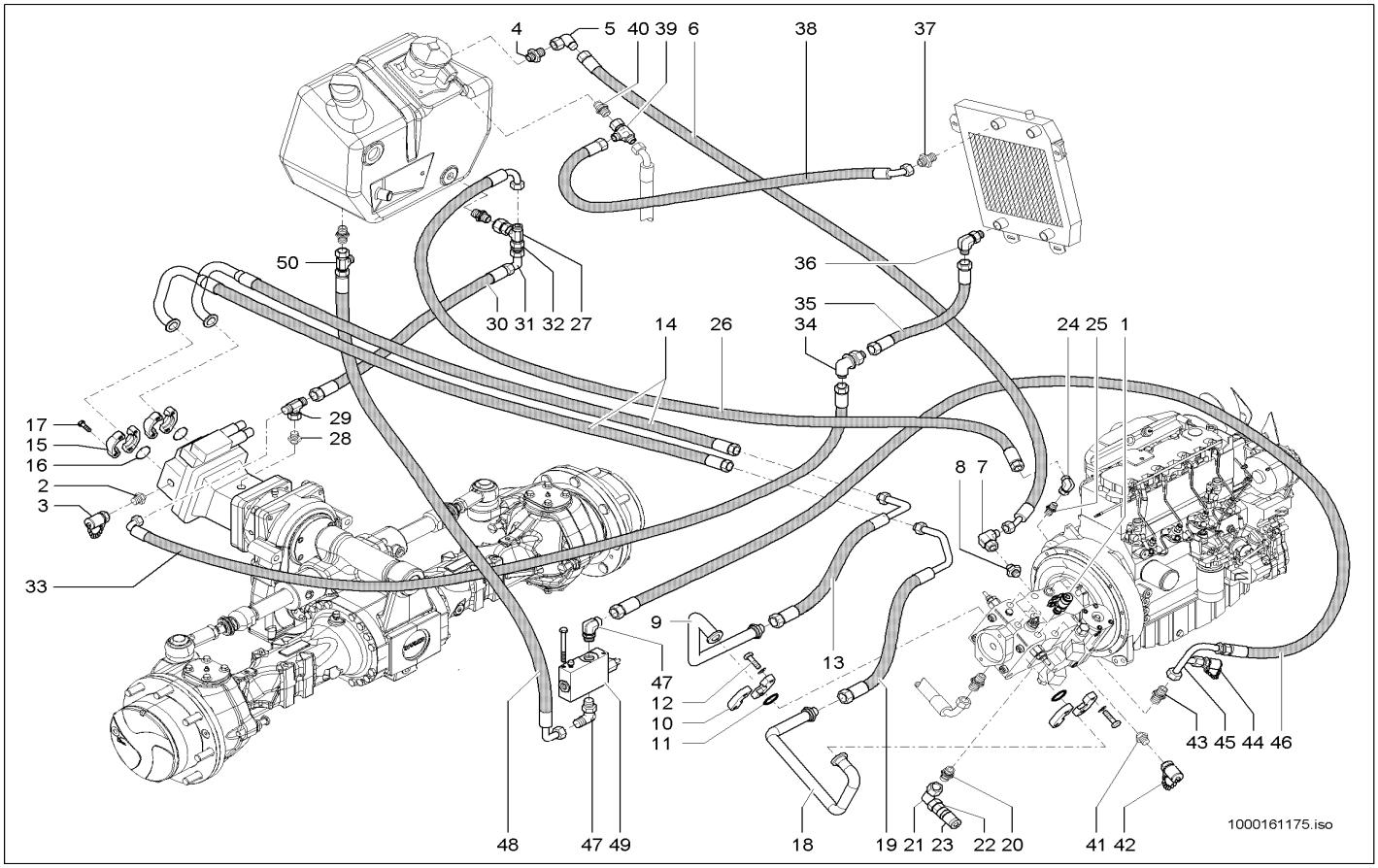


| Pos | Art.-Nr. | Anm. | Q'TY | BEZEICHNUNG | PART NAME | DESIGNATION |
|---|---|---|---|---|---|---|
| 46 | 1000114039 | | 1,00 ST | HYDRAULIKSCHLAUCH | HP HOSE | TUYAU FLEXIBLE HYDRAULIQUE |
| 47 | 1000028478 | | 2,00 ST | VERSCHRAUBUNG | SCREW JOINT | RACCORD UNION |
| 48 | 1000144661 | | 1,00 ST | HYDRAULIKSCHLAUCH | HP HOSE | TUYAU FLEXIBLE HYDRAULIQUE |
| 49 | 1000052099 | | 1,00 ST | INCHVENTIL | INCHING VALVE | SOUPAPE D'INCH |
| 50 | 1000015516 | | 1,00 ST | VERSCHRAUBUNG | SCREW JOINT | RACCORD UNION |

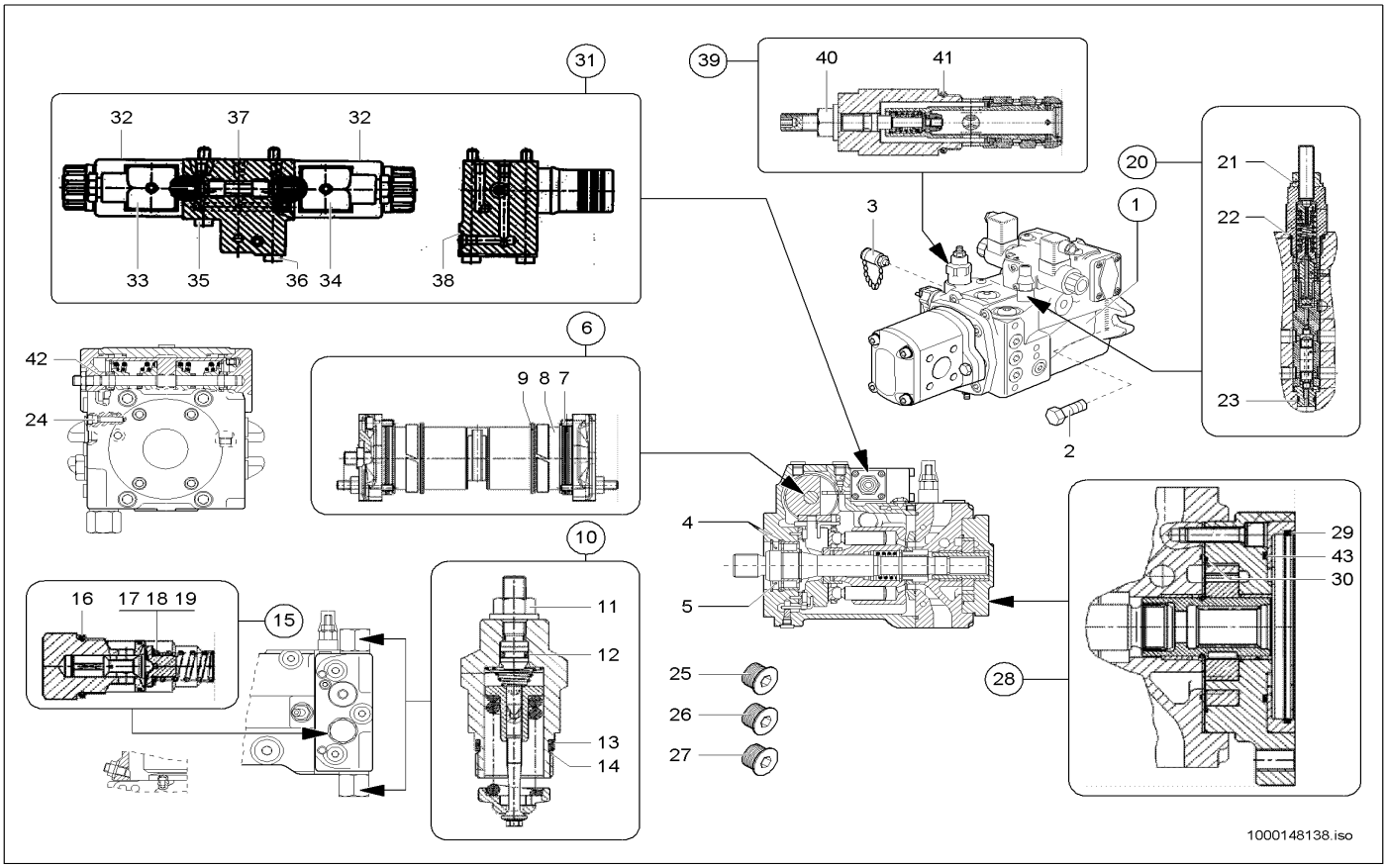


| Pos | Art.-Nr. | Anm. | Q'TY | BEZEICHNUNG | PART NAME | DESIGNATION |
|---|---|---|---|---|---|---|
| 1 | 1000138254 | | 1,00 ST | VERSTELLPUMPE | DISPLACEMENT PUMP | POMPE DE TRANSLATION |
| 2 | 1000032935 | | 2,00 ST | SCHRAUBE | SCREW | VIS |
| 3 | 1000028225 | | 1,00 ST | MINIMESSANSCHLUSS | MINIMESS POINT | CONNEXION DE MINI MESURAGE |
| 4 | 1000148140 | | 2,00 ST | SICHERUNGSRING | LOCK RING | BAGUE DE SÜRETÉ |
| 5 | 1000148165 | | 1,00 ST | RADIALWELLENDICHTRING | ROTARY SHAFT SEAL | BAGUE D'ÉTANCHÉITÉ D'ONDES RADIALI |
| 6 | 1000148166 | | 1,00 ST | VERSTELLUNG | DISPLACEMENT | DÉPLACEMENT |
| 7 | 1000148168 | | 2,00 ST | O-RING | O-RING | ANNEAU EN O |
| 8 | 1000148169 | | 2,00 ST | STÜTZRING | SUPPORT RING | ANNEAU D'APPUI |
| 9 | 1000148170 | | 2,00 ST | DICHTRING | SEAL RING | BAGUE D'ÉTANCHÉITÉ |
| 10 | 1000089359 | | 2,00 ST | DRUCKBEGRENZUNGSVENTIL | PRESSURE LIMIT RELIEFVALVE | SOUPAPE LIMITRICE DE PRESSION |
| 11 | 1000087489 | | 2,00 ST | BUNDMUTTER | LODGING NUT | ÉCROU DE COLLET |
| 12 | 1000090520 | | 2,00 ST | O-RING | O-RING | ANNEAU EN O |
| 13 | 1000087822 | | 2,00 ST | STÜTZRING | SUPPORT RING | ANNEAU D'APPUI |
| 14 | 1000039216 | | 2,00 ST | O-RING | O-RING | ANNEAU EN O |
| 15 | 1000089360 | | 1,00 ST | DRUCKREDUZIERVENTIL | PRESSURE REDUCT.VALVE | SOUPAPE DE DÉCOMPRESSION |
| 16 | 1000089364 | | 1,00 ST | O-RING | O-RING | ANNEAU EN O |
| 17 | 1000092362 | 0,5 | 1,00 ST | PASSSCHEIBE | FITTING DISC | DISQUE D'AJUSTAGE |
| 18 | 1000092390 | 0,3 | 1,00 ST | PASSSCHEIBE | FITTING DISC | DISQUE D'AJUSTAGE |
| 19 | 1000092363 | 1,0 | 1,00 ST | PASSSCHEIBE | FITTING DISC | DISQUE D'AJUSTAGE |
| 20 | 1000089369 | | 1,00 ST | ABSCHALTVENTIL | SHUT OFF VALVE | SOUPAPE DE COUPURE |
| 21 | 1000087489 | | 1,00 ST | BUNDMUTTER | LODGING NUT | ÉCROU DE COLLET |
| 22 | 1000090484 | | 1,00 ST | O-RING | O-RING | ANNEAU EN O |
| 23 | 1000133904 | | 1,00 ST | O-RING | O-RING | ANNEAU EN O |
| 24 | 1000087809 | | 1,00 ST | DÜSE | NOZZLE | CLAPET |
| 25 | 1000098752 | M22x1,5 | 1,00 ST | VERSCHLUSSSCHRAUBE | LOCK SCREW | VIS DE FERMETURE |
| 26 | 1000098755 | M18x1,5 | 4,00 ST | VERSCHLUSSSCHRAUBE | LOCK SCREW | VIS DE FERMETURE |
| 27 | 1000098754 | M12x1,5 | 5,00 ST | VERSCHLUSSSCHRAUBE | LOCK SCREW | VIS DE FERMETURE |
| 28 | 1000148184 | | 1,00 ST | ZAHNRADPUMPEN-SATZ | INTERNAL GEAR PUMP (SET) | POMPE À ENGRENAGE INTÉRIEUR (JEU) |
| 29 | 1000105059 | | 1,00 ST | DICHTRING | SEAL RING | BAGUE D'ÉTANCHÉITÉ |
| 30 | 1000086898 | | 1,00 ST | DICHTRING | SEAL RING | BAGUE D'ÉTANCHÉITÉ |
| 31 | 1000098776 | | 1,00 ST | WEGEVENTIL | DRIVE VALVE | SOUPAPE DE CONDUITE |
| 32 | 1000089490 | | 2,00 ST | MAGNET | SOLENOID | AIMANT |
| 33 | 1000086871 | | 1,00 ST | SCHNELLVERSCHLUßKUPPLUNG | QUICK LOCK COUPLING | COUPLEUR À FERMETURE RAPIDE |
| 34 | 1000086868 | | 1,00 ST | STECKER | PLUG | BOUCHON |
| 35 | 1000085459 | | 3,00 ST | ZYLINDERSCHRAUBE | CHEESE HEAD SCREW | VIS A TETE CYLINDRIQUE |
| 36 | 1000015365 | | 2,00 ST | ZYLINDERSCHRAUBE | CHEESE HEAD SCREW | VIS A TETE CYLINDRIQUE |
| 37 | 1000098625 | | 1,00 ST | DICHTUNG | SEAL | JOINT D'ÉTANCHÉITÉ |
| 38 | 1000088823 | | 1,00 ST | O-RING | O-RING | ANNEAU EN O |
| 39 | 1000148186 | | 1,00 ST | REGLERPATRONE | CONTROL CARTRIDGE | CARTOUCHE DE RÉGULATEUR |
| 40 | 1000087489 | | 1,00 ST | BUNDMUTTER | LODGING NUT | ÉCROU DE COLLET |
| 41 | 1000148188 | | 1,00 ST | O-RING | O-RING | ANNEAU EN O |
| 42 | 1000090512 | | 1,00 ST | O-RING | O-RING | ANNEAU EN O |
| 43 | 1000087824 | | 1,00 ST | O-RING | O-RING | ANNEAU EN O |

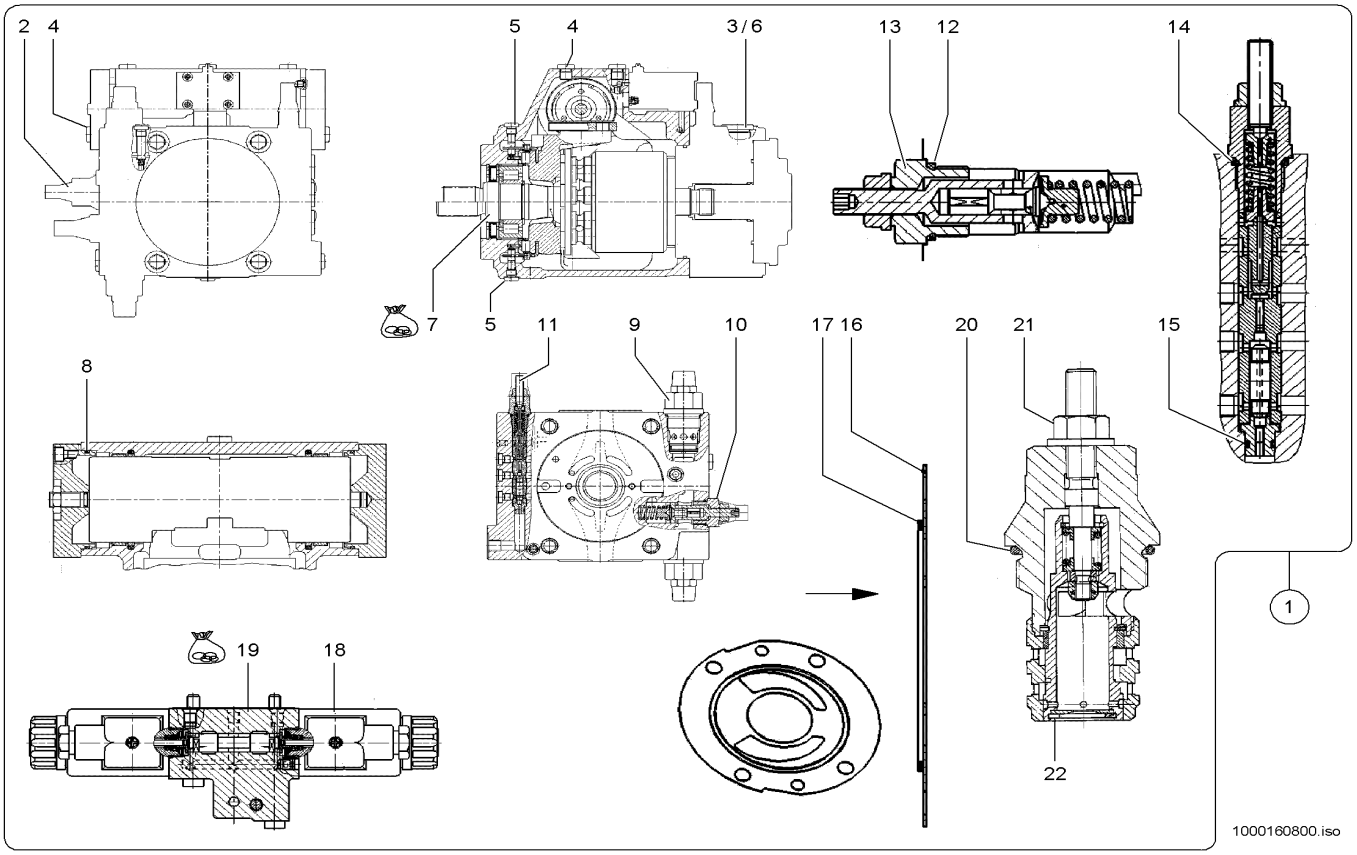


| Pos | Art.-Nr. | Anm. | Q'TY | BEZEICHNUNG | PART NAME | DESIGNATION |
|---|---|---|---|---|---|---|
| 1 | 1000150519 | | 1,00 ST | VERSTELLPUMPE | DISPLACEMENT PUMP | POMPE DE TRANSLATION |
| 2 | 1000148186 | | 1,00 ST | REGLERPATRONE | CONTROL CARTRIDGE | CARTOUCHE DE RÉGULATEUR |
| 3 | 1000160755 | | 2,00 ST | VERSCHLUSSSCHRAUBE | LOCK SCREW | VIS DE FERMETURE |
| 4 | 1000160756 | | 4,00 ST | VERSCHLUSSSCHRAUBE | LOCK SCREW | VIS DE FERMETURE |
| 5 | 1000160757 | | 2,00 ST | VERSCHLUSSSCHRAUBE | LOCK SCREW | VIS DE FERMETURE |
| 6 | 1000098752 | | 3,00 ST | VERSCHLUSSSCHRAUBE | LOCK SCREW | VIS DE FERMETURE |
| 7 | 1000160759 | | 1,00 ST | DICHTSATZ | ? | ? |
| 8 | 1000160760 | | 2,00 ST | O-RING | O-RING | ANNEAU EN O |
| 9 | 1000160763 | | 2,00 ST | VENTIL | VALVE | SOUPAPE |
| 10 | 1000160761 | | 1,00 ST | DRUCKBEGRENZUNGSVENTIL | PRESSURE LIMIT RELIEFVALVE | SOUPAPE LIMITRICE DE PRESSION |
| 11 | 1000160762 | | 1,00 ST | ABSCHALTVENTIL | SHUT OFF VALVE | SOUPAPE DE COUPURE |
| 12 | 1000039216 | | 1,00 ST | O-RING | O-RING | ANNEAU EN O |
| 13 | 1000098575 | | 1,00 ST | BUNDMUTTER | LODGING NUT | ÉCROU DE COLLET |
| 14 | 1000090484 | | 1,00 ST | O-RING | O-RING | ANNEAU EN O |
| 15 | 1000133904 | | 1,00 ST | O-RING | O-RING | ANNEAU EN O |
| 16 | 1000160764 | | 1,00 ST | VERSCHLEISSPLATTE | WEAR OUT PLATE | PLAQUE D'USURE |
| 17 | 1000090535 | | 1,00 ST | O-RING | O-RING | ANNEAU EN O |
| 18 | 1000089490 | | 2,00 ST | MAGNET | SOLENOID | AIMANT |
| 19 | 1000160344 | | 1,00 ST | DICHTSATZ WEGEVENTIL | SEAL KIT | POCHETTE DE JOINTS |
| 20 | 1000148188 | | 1,00 ST | O-RING | O-RING | ANNEAU EN O |
| 21 | 1000087821 | | 1,00 ST | BUNDMUTTER | LODGING NUT | ÉCROU À COLLET |
| 22 | 1000160766 | | 1,00 ST | SEEGERRING | ROTARY SHAFT SEAL | CIRCLIP |

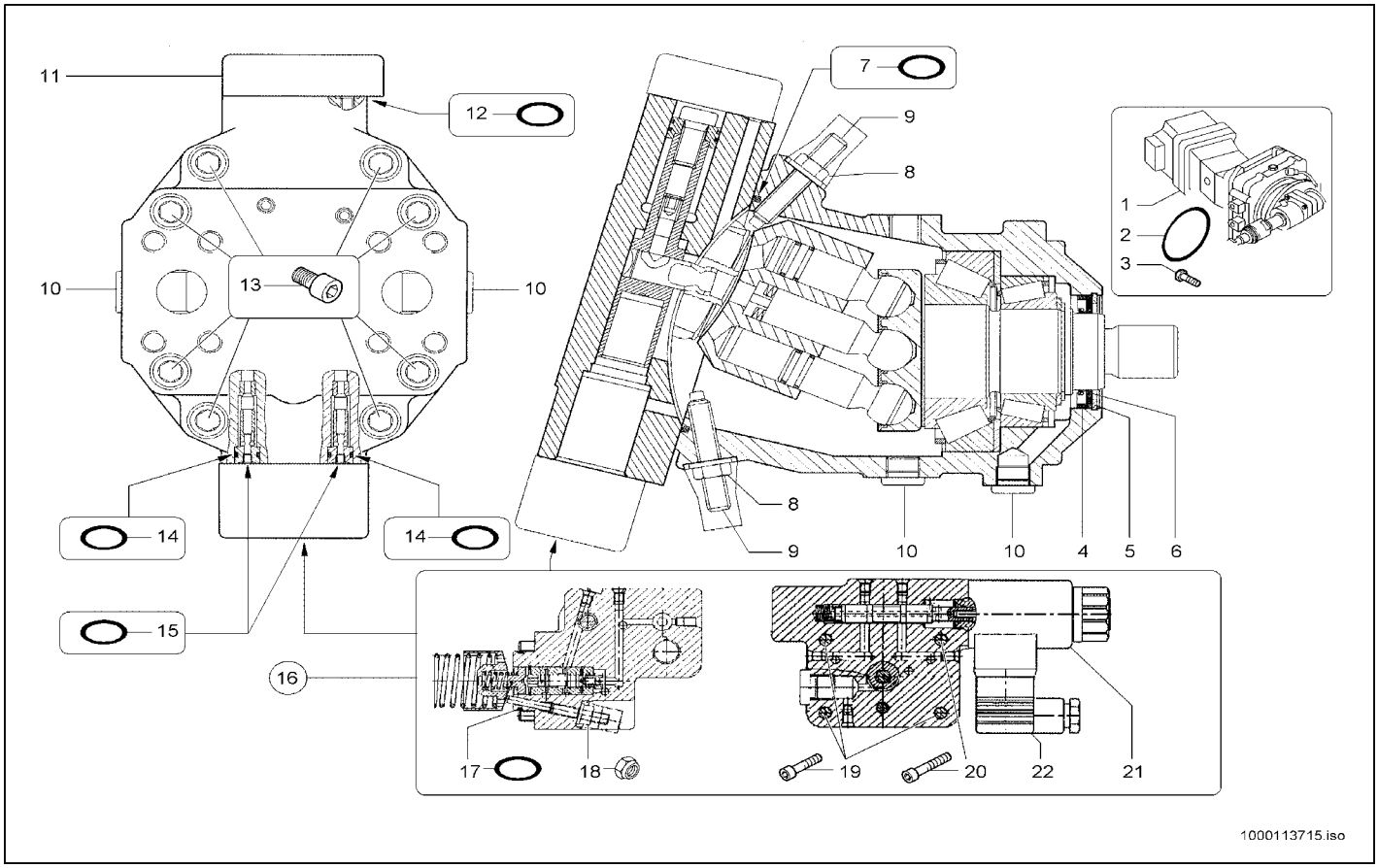


| Pos | Art.-Nr. | Anm. | Q'TY | BEZEICHNUNG | PART NAME | DESIGNATION |
|---|---|---|---|---|---|---|
| 1 | 1000098769 | | 1,00 ST | VERSTELLMOTOR | DISPLACEMENT MOTOR | MOTEUR DE DÉPLACER |
| 2 | 1000090424 | | 1,00 ST | O-RING | O-RING | ANNEAU EN O |
| 3 | 1000032990 | | 4,00 ST | SCHRAUBE | SCREW | VIS |
| 4 | 1000086899 | | 1,00 ST | RADIALWELLENDICHTRING | ROTARY SHAFT SEAL | BAGUE D'ÉTANCHÉITÉ D'ONDES RADIALI |
| 5 | 1000113722 | | 1,00 ST | SICHERUNGSRING | LOCK RING | BAGUE DE SÛRETÉ |
| 6 | 1000113725 | | 1,00 ST | STÜTZSCHEIBE | SUPPORT DISC | DISQUE D'APPUI |
| 7 | 1000113726 | | 1,00 ST | O-RING | O-RING | ANNEAU EN O |
| 8 | 1000113731 | | 2,00 ST | MUTTER | NUT | ÉCROU |
| 9 | 1000113729 | | 2,00 ST | GEWINDESTIFT | THREAD PIN | GOUPILLE FILETÉE |
| 10 | 1000098807 | | 4,00 ST | VERSCHLUSSSCHRAUBE | LOCK SCREW | VIS DE FERMETURE |
| 11 | 1000113733 | | 1,00 ST | DECKEL | COVER | COUVERCLE |
| 12 | 1000090500 | | 6,00 ST | O-RING | O-RING | ANNEAU EN O |
| 13 | 1000113736 | | 8,00 ST | ZYLINDERSCHRAUBE | CHEESE HEAD SCREW | VIS À TÊTE CYLINDRIQUE |
| 14 | 1000090525 | | 2,00 ST | O-RING | O-RING | ANNEAU EN O |
| 15 | 1000090557 | | 2,00 ST | O-RING | O-RING | ANNEAU EN O |
| 16 | 1000113732 | | 1,00 ST | STEUERTEIL | CONTROLPIECE | PIÈCE DE COMMANDE |
| 17 | 1000090554 | | 1,00 ST | O-RING | O-RING | ANNEAU EN O |
| 18 | 1000039212 | | 1,00 ST | 6KT-MUTTER | HEXAGON NUT | ÉCROU HEXAGONAL |
| 19 | 1000086867 | | 3,00 ST | ZYLINDERSCHRAUBE | CHEESE HEAD SCREW | VIS À TÊTE CYLINDRIQUE |
| 20 | 1000085492 | | 1,00 ST | ZYLINDERSCHRAUBE | CHEESE HEAD SCREW | VIS A TETE CYLINDRIQUE |
| 21 | 1000089490 | | 2,00 ST | MAGNET | SOLENOID | AIMANT |
| 22 | 1000086868 | | 2,00 ST | STECKER | PLUG | BOUCHON |

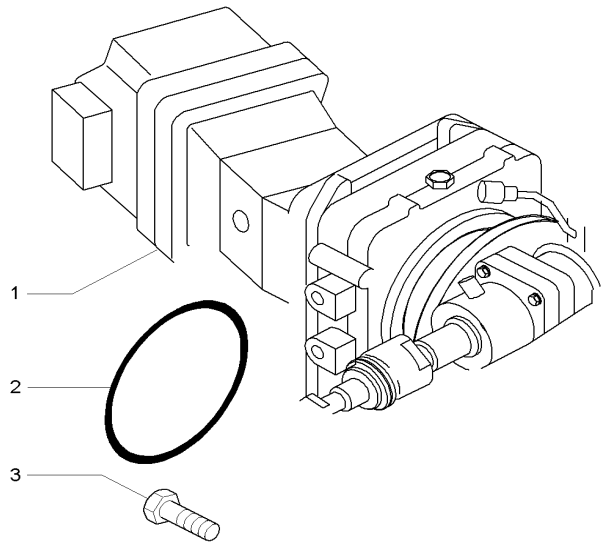


1000161582.iso

| Pos | Art.-Nr. | Anm. | Q'TY | BEZEICHNUNG | PART NAME | DESIGNATION |
|---|---|---|---|---|---|---|
| 1 | 1000158860 | | 1,00 ST | VERSTELLMOTOR | DISPLACEMENT MOTOR | MOTEUR DE DÉPLACER |
| 2 | 1000090424 | | 1,00 ST | O-RING | O-RING | ANNEAU EN O |
| 3 | 1000032990 | | 4,00 ST | SCHRAUBE | SCREW | VIS |

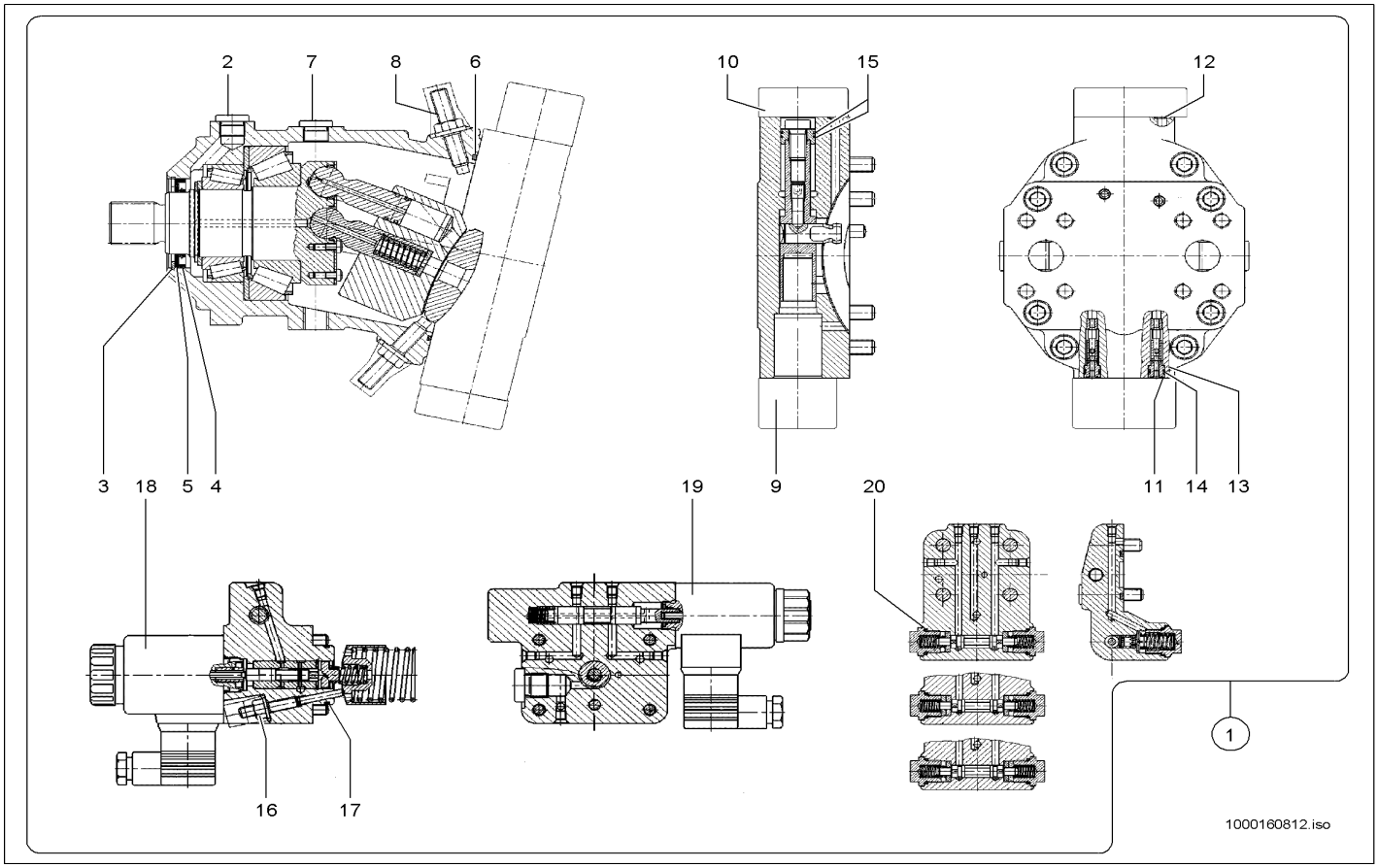


| Pos | Art.-Nr. | Anm. | Q'TY | BEZEICHNUNG | PART NAME | DESIGNATION |
|---|---|---|---|---|---|---|
| 1 | 1000150541 | | 1,00 ST | VERSTELLMOTOR | DISPLACEMENT MOTOR | MOTEUR DE DÉPLACER |
| 2 | 1000160769 | | 1,00 ST | VERSCHLUSSSCHRAUBE | LOCK SCREW | VIS DE FERMETURE |
| 3 | 1000160233 | | 1,00 ST | SICHERUNGSRING | LOCK RING | BAGUE DE SÜRETÉ |
| 4 | 1000088826 | | 1,00 ST | WELLENDICHTRING | SHAFT SEAL | BAGUE D'ÉTANCHÉITÉ D'ONDES |
| 5 | 1000160234 | | 1,00 ST | STÜTZSCHEIBE | SUPPORT DISC | DISQUE D'APPUI |
| 6 | 1000160768 | | 1,00 ST | O-RING | O-RING | ANNEAU EN O |
| 7 | 1000160770 | | 1,00 ST | VERSCHLUSSSCHRAUBE | LOCK SCREW | VIS DE FERMETURE |
| 8 | 1000086869 | | 2,00 ST | SEAL-LOCK-MUTTER | SEAL LOCK NUT | ÉCROU DE SEAL LOCK |
| 9 | 1000160772 | | 1,00 ST | STEUERTEIL | CONTROLPIECE | PIÈCE DE COMMANDE |
| 10 | 1000160773 | | 1,00 ST | SPÜLVENTIL | WASHING VALVE | SOUPAPE DE BALAYAGE |
| 11 | 1000090557 | | 2,00 ST | O-RING | O-RING | ANNEAU EN O |
| 12 | 1000090500 | | 6,00 ST | O-RING | O-RING | ANNEAU EN O |
| 13 | 1000090525 | | 2,00 ST | O-RING | O-RING | ANNEAU EN O |
| 14 | 1000160239 | | 2,00 ST | STÜTZRING | SUPPORT RING | ANNEAU D'APPUI |
| 15 | 1000160771 | | 3,00 ST | RECHTECKRING | RECTANGLE RING | ANNEAU RECTANGULAIRE |
| 16 | 1000039212 | | 1,00 ST | 6KT-MUTTER | HEXAGON NUT | ÉCROU HEXAGONAL |
| 17 | 1000088821 | | 1,00 ST | O-RING | O-RING | ANNEAU EN O |
| 18 | 1000135777 | | 1,00 ST | MAGNET | SOLENOID | AIMANT |
| 19 | 1000089490 | | 1,00 ST | MAGNET | SOLENOID | AIMANT |
| 20 | 1000160774 | | 2,00 ST | O-RING | O-RING | ANNEAU EN O |

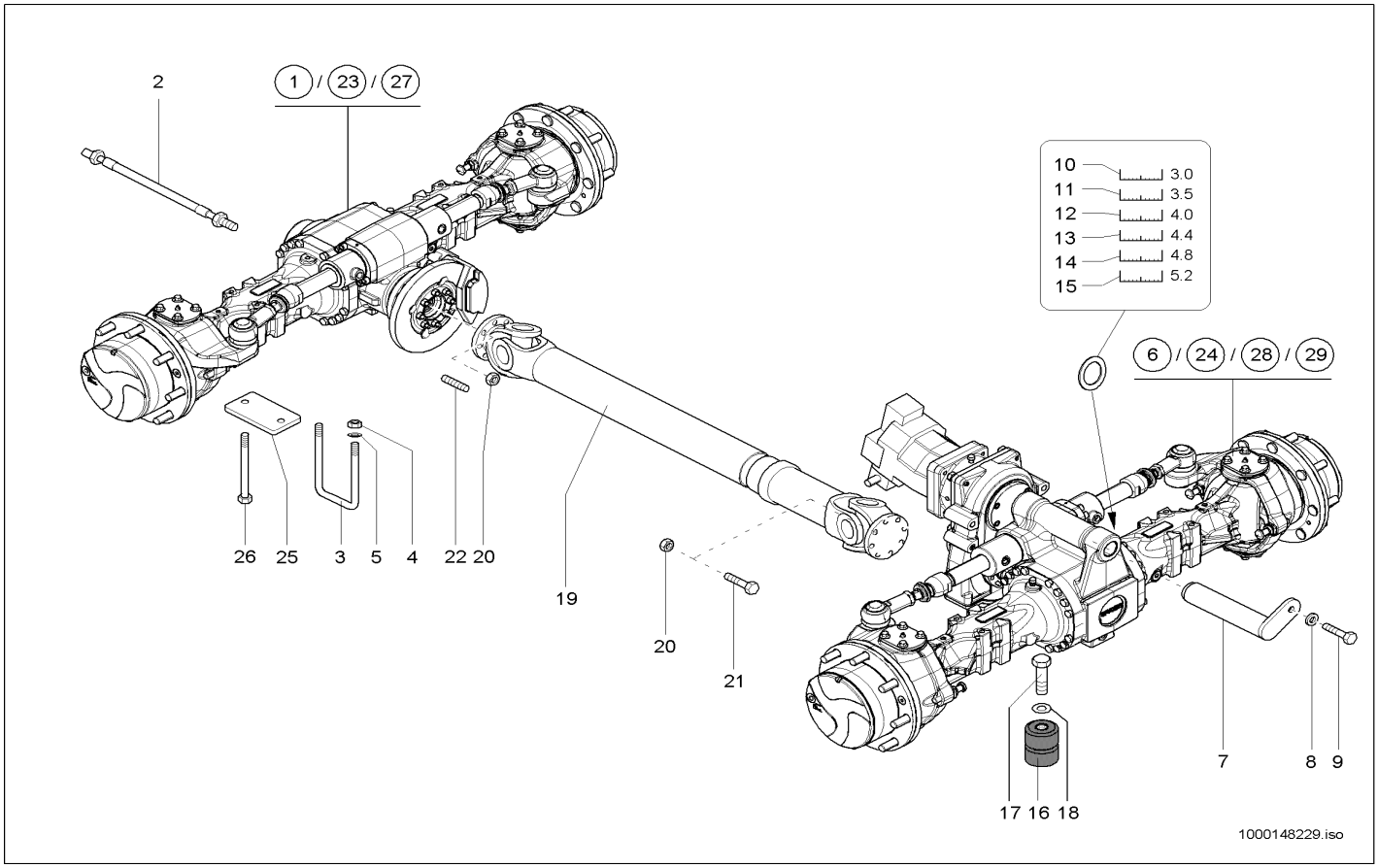


| Pos | Art.-Nr. | Anm. | Q'TY | BEZEICHNUNG | PART NAME | DESIGNATION |
|---|---|---|---|---|---|---|
| 1 | 1000142537 | A:347010020 | 1,00 ST | VORDERACHSE | FRONT AXLE | AVANT-TRAIN |
| 2 | 1000142774 | | 1,00 ST | ENTLÜFTUNGSLEITUNG KPL | BREATHER LINE | CONDUITE DE DÉGAGEMENT D'AIR |
| 3 | 1000135684 | A:347010085 | 2,00 ST | BÜGEL | HOLDER | ARCHET |
| 4 | 1000018412 | | 4,00 ST | 6KT-MUTTER | HEXAGON NUT | ÉCROU HEXAGONAL |
| 5 | 1000101180 | | 4,00 ST | SCHEIBE | WASHER | RONDELLE |
| 6 | 1000142538 | A:347010020 | 1,00 ST | HINTERACHSE | REAR AXLE | ESSIEU ARRIÈRE |
| 7 | 1000135203 | | 1,00 ST | BOLZEN | PIN | AXE |
| 8 | 1000091783 | | 1,00 ST | SCHWEISSBUCHSE | WELD BUSHING | BAGUE DE SOUDAGE |
| 9 | 1000047789 | | 1,00 ST | 6KT-SCHRAUBE | HEX SCREW | VIS À TÊTE HEXAGONALE |
| 10 | 1000040610 | 3,0 | 1,00 ST | EINSTELLSCHEIBE | DISC | DISQUE |
| 11 | 1000092575 | 3,5 | 1,00 ST | EINSTELLSCHEIBE | DISC | DISQUE |
| 12 | 1000040619 | 4,0 | 1,00 ST | EINSTELLSCHEIBE | DISC | DISQUE |
| 13 | 1000100367 | 4,4 | 1,00 ST | EINSTELLSCHEIBE | DISC | DISQUE |
| 14 | 1000100471 | 4,8 | 1,00 ST | EINSTELLSCHEIBE | DISC | DISQUE |
| 15 | 1000100472 | 5,2 | 1,00 ST | EINSTELLSCHEIBE | DISC | DISQUE |
| 16 | 1000032164 | | 2,00 ST | GUMMIHOHLFEDER | RUBBER HOLLOW SPRING | RESSORT CREUX EN CAOUTCHOUC |
| 17 | 1000047789 | | 2,00 ST | 6KT-SCHRAUBE | HEX SCREW | VIS À TÊTE HEXAGONALE |
| 18 | 1000049219 | | 2,00 ST | SCHEIBE | WASHER | RONDELLE |
| 19 | 1000142698 | | 1,00 ST | GELENKWELLE | CARDAN SHAFT | ARBRE ARTICULÉ |
| 20 | 1000049102 | | 16,00 ST | 6KT-MUTTER | HEXAGON NUT | ÉCROU HEXAGONAL |
| 21 | 1000015348 | | 8,00 ST | 6KT-SCHRAUBE | HEX SCREW | VIS À TÊTE HEXAGONALE |
| 22 | 1000048917 | | 8,00 ST | STIFTSCHRAUBE | STUD | GOUJON |
| 23 | 1000144964 | E:347010021<br>A:347010109 | 1,00 ST | VORDERACHSE | FRONT AXLE | AVANT-TRAIN |
| 24 | 1000144965 | E:347010021<br>A:347010109 | 1,00 ST | HINTERACHSE | REAR AXLE | ESSIEU ARRIÈRE |
| 25 | 1000149224 | E:347010086 | 2,00 ST | PLATTE | PLATE | PLAQUE |
| 26 | 1000047346 | E:347010086 | 4,00 ST | 6KT-SCHRAUBE | HEX SCREW | VIS À TÊTE HEXAGONALE |
| 27 | 1000152258 | E:347010110 | 1,00 ST | VORDERACHSE | FRONT AXLE | AVANT-TRAIN |
| 28 | 1000153359 | E:347010110 | 1,00 ST | HINTERACHSE | REAR AXLE | ESSIEU ARRIÈRE |
| 29 | 1000152261 | Opt: 30 km/h | 1,00 ST | HINTERACHSE | REAR AXLE | ESSIEU ARRIÈRE |

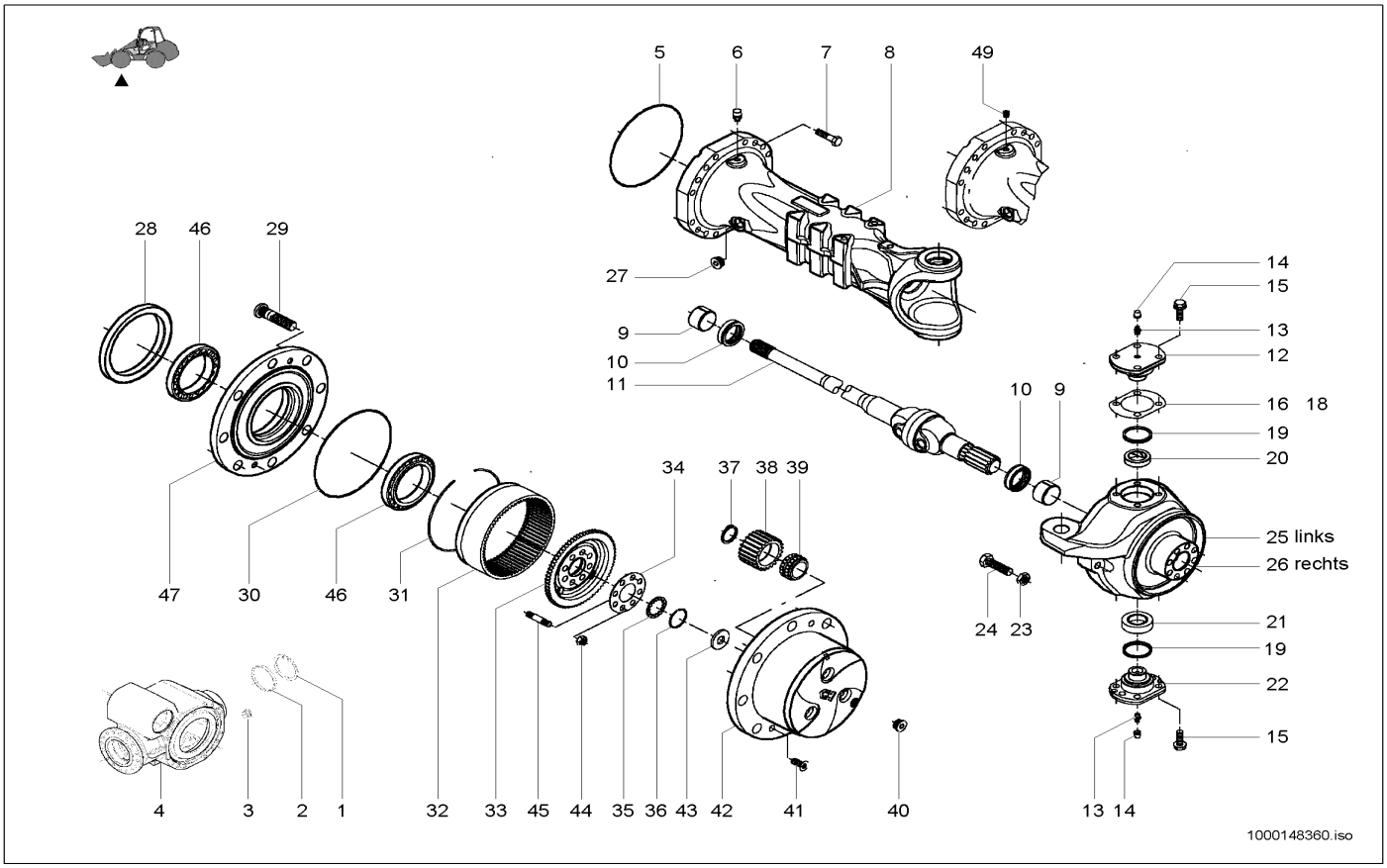


| Pos | Art.-Nr. | Anm. | Q'TY | BEZEICHNUNG | PART NAME | DESIGNATION |
|---|---|---|---|---|---|---|
| 1 | 1000088696 | | 1,00 ST | SICHERUNGSRING | LOCK RING | BAGUE DE SÛRETÉ |
| 2 | 1000143237 | | 1,00 ST | STOPFEN | PLUG | BOUCHON |
| 3 | 1000102388 | | 1,00 ST | MAGNETSTOPFEN | MAGNET PLUG | BOUCHON MAGNÉTIQUE |
| 4 | 1000143238 | | 1,00 ST | GEHÄUSE | HOUSING | BOÎTE |
| 5 | 1000105848 | | 1,00 ST | O-RING | O-RING | ANNEAU EN O |
| 6 | 1000113680 | | 1,00 ST | ENTLÜFTER | BREATHER | AÉRATEUR |
| 7 | 1000105843 | | 32,00 ST | SCHRAUBE | SCREW | VIS |
| 8 | 1000148361 | | 2,00 ST | ACHSGEHÄUSE | AXLE CASE | CORPS DE LA BOÎTE D'ESSIEU |
| 9 | 1000143353 | | 4,00 ST | ANLAUFBUCHSE | BUSHING | BAGUE DE DÉMARRAGE |
| 10 | 1000143354 | | 4,00 ST | DICHTRING | SEAL RING | BAGUE D'ÉTANCHÉITÉ |
| 11 | 1000148362 | | 2,00 ST | GELENK | ARTICULATION | ARTICULATION |
| 12 | 1000143356 | | 2,00 ST | BOLZEN | PIN | AXE |
| 13 | 1000143357 | | 4,00 ST | SCHMIERNIPPEL | GREASE NIPPLE | GRAISSEUR À BILLE |
| 14 | 1000088751 | | 4,00 ST | STOPFEN | PLUG | BOUCHON |
| 15 | 1000143358 | | 20,00 ST | SCHRAUBE | SCREW | VIS |
| 16 | 1000143359 | | 1,00 ST | EINSTELLSCHEIBE | DISC | DISQUE |
| 17 | 1000143360 | | 1,00 ST | EINSTELLSCHEIBE | DISC | DISQUE |
| 18 | 1000143361 | | 1,00 ST | EINSTELLSCHEIBE | DISC | DISQUE |
| 19 | 1000143362 | | 2,00 ST | DICHTRING | SEAL RING | BAGUE D'ÉTANCHÉITÉ |
| 20 | 1000143363 | | 2,00 ST | BUCHSE | BUSHING | BAGUE |
| 21 | 1000143364 | | 2,00 ST | BUCHSE | BUSHING | BAGUE |
| 22 | 1000143365 | | 2,00 ST | BOLZEN | PIN | AXE |
| 23 | 1000138622 | | 4,00 ST | MUTTER | NUT | ÉCROU |
| 24 | 1000088663 | | 4,00 ST | ANSCHLAG | LIMIT STOP | BATTÉE |
| 25 | 1000143366 | L | 1,00 ST | GELENKGEHÄUSE | ARTICULATION CASE | BOÎTE ARTICULÉE |
| 26 | 1000143367 | R | 1,00 ST | GELENKGEHÄUSE | ARTICULATION CASE | BOÎTE ARTICULÉE |
| 27 | 1000143368 | | 2,00 ST | STOPFEN | PLUG | BOUCHON |
| 28 | 1000143369 | | 2,00 ST | DICHTRING | SEAL RING | BAGUE D'ÉTANCHÉITÉ |
| 29 | 1000143370 | | 16,00 ST | RADBOLZEN | WHEEL BOLT | AXE DE ROUE |
| 30 | 1000105902 | | 2,00 ST | O-RING | O-RING | ANNEAU EN O |
| 31 | 1000105857 | | 2,00 ST | SICHERUNGSRING | LOCK RING | BAGUE DE SÛRETÉ |
| 32 | 1000105901 | | 2,00 ST | ZAHNKRANZ | RING GEAR | COURONNE DENTÉE |
| 33 | 1000105883 | | 2,00 ST | HOHLRADTRÄGER | HOLLOW WHEEL SUPPORT | SUPPORT DE ROUE CREUSE |
| 34 | 1000143371 | | 2,00 ST | SICHERUNGSBLECH | LOCK PLATE | FREIN EN TÔLE |
| 35 | 1000143372 | | 2,00 ST | RING | RING | ANNEAU |
| 36 | 1000143373 | | 2,00 ST | SICHERUNGSRING | LOCK RING | BAGUE DE SÛRETÉ |
| 37 | 1000105888 | | 6,00 ST | SICHERUNGSRING | LOCK RING | BAGUE DE SÛRETÉ |
| 38 | 1000105889 | | 6,00 ST | PLANETENRAD | PLANET GEAR | ROUE PLANÉTAIRE |
| 39 | 1000105890 | | 6,00 ST | LAGER | BEARING | PALIER |
| 40 | 1000105891 | | 2,00 ST | STOPFEN | PLUG | BOUCHON |
| 41 | 1000105893 | | 4,00 ST | SENKSCHRAUBE | SINKSCREW | VIS À TÊTE NOYÉE |
| 42 | 1000105894 | | 2,00 ST | PLANETENGEHÄUSE | PLANETARY HOUSING | BOÎTE PLANÉTAIRE |
| 43 | 1000105897 | | 2,00 ST | ANLAUFSCHEIBE | WASHER | DISQUE DE DÉMARRAGE |
| 44 | 1000105898 | | 16,00 ST | MUTTER | NUT | ÉCROU |
| 45 | 1000105899 | | 16,00 ST | STIFTSCHRAUBE | STUD | GOUJON |
| 46 | 1000105854 | | 4,00 ST | LAGER | BEARING | PALIER |

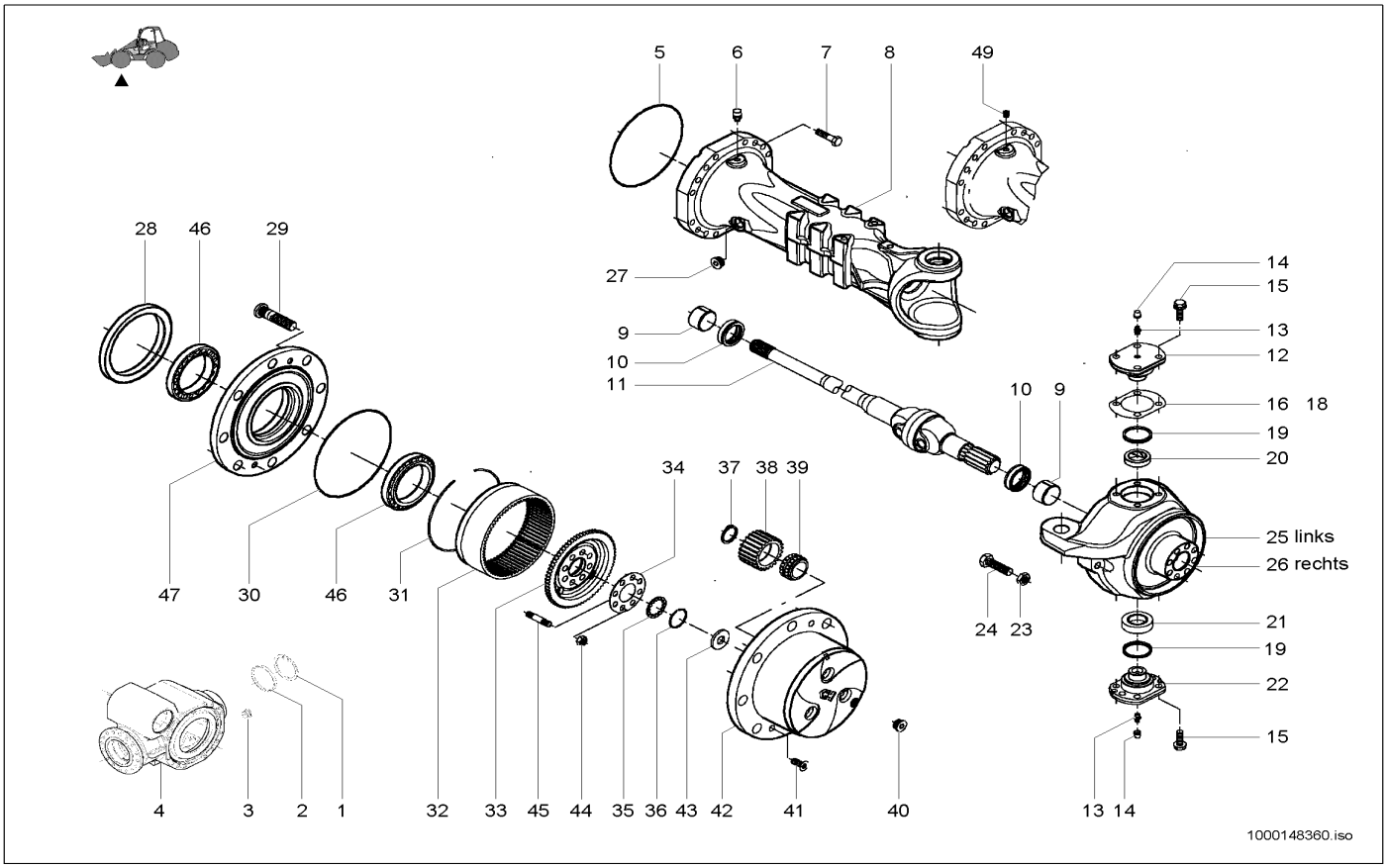


| Pos | Art.-Nr. | Anm. | Q'TY | BEZEICHNUNG | PART NAME | DESIGNATION |
|---|---|---|---|---|---|---|
| 47 | 1000143374 | | 2,00 ST | RADNABE | WHEEL HUB | MOYEU DE ROUE |
| 48 | 1000105910 | | 2,00 ST | PLANETENGEHÄUSE | PLANETARY HOUSING | BOÎTE PLANÉTAIRE |
| 49 | 1000106914 | | 1,00 ST | VERSCHLUSSSCHRAUBE | LOCK SCREW | VIS DE FERMETURE |

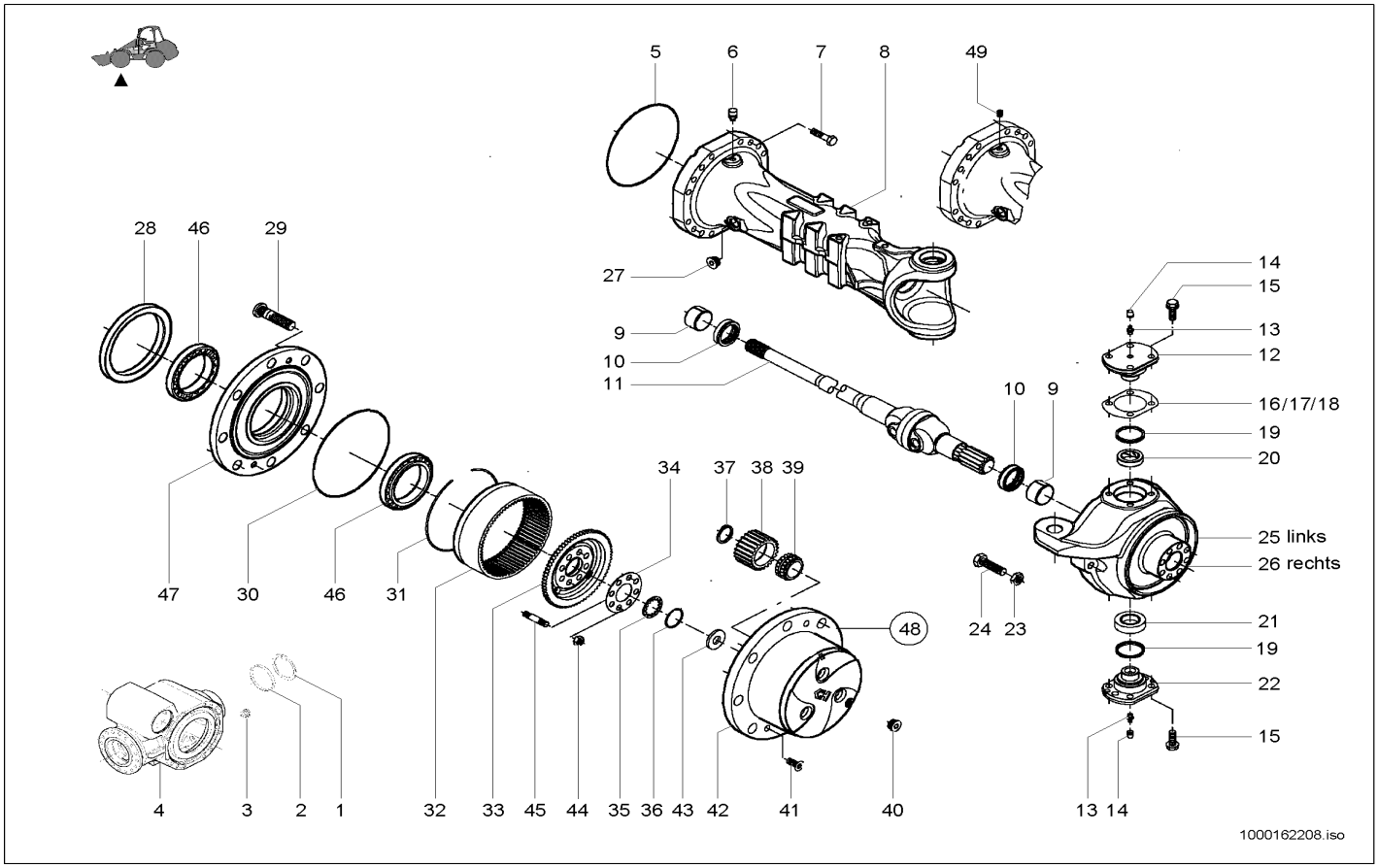


| Pos | Art.-Nr. | Anm. | Q'TY | BEZEICHNUNG | PART NAME | DESIGNATION |
|---|---|---|---|---|---|---|
| 1 | 1000088696 | | 1,00 ST | SICHERUNGSRING | LOCK RING | BAGUE DE SÛRETÉ |
| 2 | 1000143237 | | 1,00 ST | STOPFEN | PLUG | BOUCHON |
| 3 | 1000102388 | | 1,00 ST | MAGNETSTOPFEN | MAGNET PLUG | BOUCHON MAGNÉTIQUE |
| 4 | 1000143238 | | 1,00 ST | GEHÄUSE | HOUSING | BOÎTE |
| 5 | 1000105848 | | 1,00 ST | O-RING | O-RING | ANNEAU EN O |
| 6 | 1000113680 | | 1,00 ST | ENTLÜFTER | BREATHER | AÉRATEUR |
| 7 | 1000105843 | | 32,00 ST | SCHRAUBE | SCREW | VIS |
| 8 | 1000148361 | | 2,00 ST | ACHSGEHÄUSE | AXLE CASE | CORPS DE LA BOÎTE D'ESSIEU |
| 9 | 1000143353 | | 4,00 ST | ANLAUFBUCHSE | BUSHING | BAGUE DE DÉMARRAGE |
| 10 | 1000143354 | | 4,00 ST | DICHTRING | SEAL RING | BAGUE D'ÉTANCHÉITÉ |
| 11 | 1000148362 | | 2,00 ST | GELENK | ARTICULATION | ARTICULATION |
| 12 | 1000143356 | | 2,00 ST | BOLZEN | PIN | AXE |
| 13 | 1000143357 | | 4,00 ST | SCHMIERNIPPEL | GREASE NIPPLE | GRAISSEUR À BILLE |
| 14 | 1000088751 | | 4,00 ST | STOPFEN | PLUG | BOUCHON |
| 15 | 1000143358 | | 20,00 ST | SCHRAUBE | SCREW | VIS |
| 16 | 1000143359 | | 1,00 ST | EINSTELLSCHEIBE | DISC | DISQUE |
| 17 | 1000143360 | | 1,00 ST | EINSTELLSCHEIBE | DISC | DISQUE |
| 18 | 1000143361 | | 1,00 ST | EINSTELLSCHEIBE | DISC | DISQUE |
| 19 | 1000143362 | | 2,00 ST | DICHTRING | SEAL RING | BAGUE D'ÉTANCHÉITÉ |
| 20 | 1000143363 | | 2,00 ST | BUCHSE | BUSHING | BAGUE |
| 21 | 1000143364 | | 2,00 ST | BUCHSE | BUSHING | BAGUE |
| 22 | 1000143365 | | 2,00 ST | BOLZEN | PIN | AXE |
| 23 | 1000138622 | | 4,00 ST | MUTTER | NUT | ÉCROU |
| 24 | 1000088663 | | 4,00 ST | ANSCHLAG | LIMIT STOP | BATTÉE |
| 25 | 1000162184 | L | 1,00 ST | GELENKGEHÄUSE | ARTICULATION CASE | BOÎTE ARTICULÉE |
| 26 | 1000162186 | R | 1,00 ST | GELENKGEHÄUSE | ARTICULATION CASE | BOÎTE ARTICULÉE |
| 27 | 1000143368 | | 2,00 ST | STOPFEN | PLUG | BOUCHON |
| 28 | 1000143369 | | 2,00 ST | DICHTRING | SEAL RING | BAGUE D'ÉTANCHÉITÉ |
| 29 | 1000143370 | | 16,00 ST | RADBOLZEN | WHEEL BOLT | AXE DE ROUE |
| 30 | 1000105902 | | 2,00 ST | O-RING | O-RING | ANNEAU EN O |
| 31 | 1000105857 | | 2,00 ST | SICHERUNGSRING | LOCK RING | BAGUE DE SÛRETÉ |
| 32 | 1000105901 | | 2,00 ST | ZAHNKRANZ | RING GEAR | COURONNE DENTÉE |
| 33 | 1000105883 | | 2,00 ST | HOHLRADTRÄGER | HOLLOW WHEEL SUPPORT | SUPPORT DE ROUE CREUSE |
| 34 | 1000143371 | | 2,00 ST | SICHERUNGSBLECH | LOCK PLATE | FREIN EN TÔLE |
| 35 | 1000143372 | | 2,00 ST | RING | RING | ANNEAU |
| 36 | 1000143373 | | 2,00 ST | SICHERUNGSRING | LOCK RING | BAGUE DE SÛRETÉ |
| 37 | 1000105888 | | 6,00 ST | SICHERUNGSRING | LOCK RING | BAGUE DE SÛRETÉ |
| 38 | 1000105889 | | 6,00 ST | PLANETENRAD | PLANET GEAR | ROUE PLANÉTAIRE |
| 39 | 1000105890 | | 6,00 ST | LAGER | BEARING | PALIER |
| 40 | 1000105891 | | 2,00 ST | STOPFEN | PLUG | BOUCHON |
| 41 | 1000105893 | | 4,00 ST | SENKSCHRAUBE | SINKSCREW | VIS À TÊTE NOYÉE |
| 42 | 1000105894 | | 2,00 ST | PLANETENGEHÄUSE | PLANETARY HOUSING | BOÎTE PLANÉTAIRE |
| 43 | 1000105897 | | 2,00 ST | ANLAUFSCHEIBE | WASHER | DISQUE DE DÉMARRAGE |
| 44 | 1000105898 | | 16,00 ST | MUTTER | NUT | ÉCROU |
| 45 | 1000105899 | | 16,00 ST | STIFTSCHRAUBE | STUD | GOUJON |
| 46 | 1000105854 | | 4,00 ST | LAGER | BEARING | PALIER |

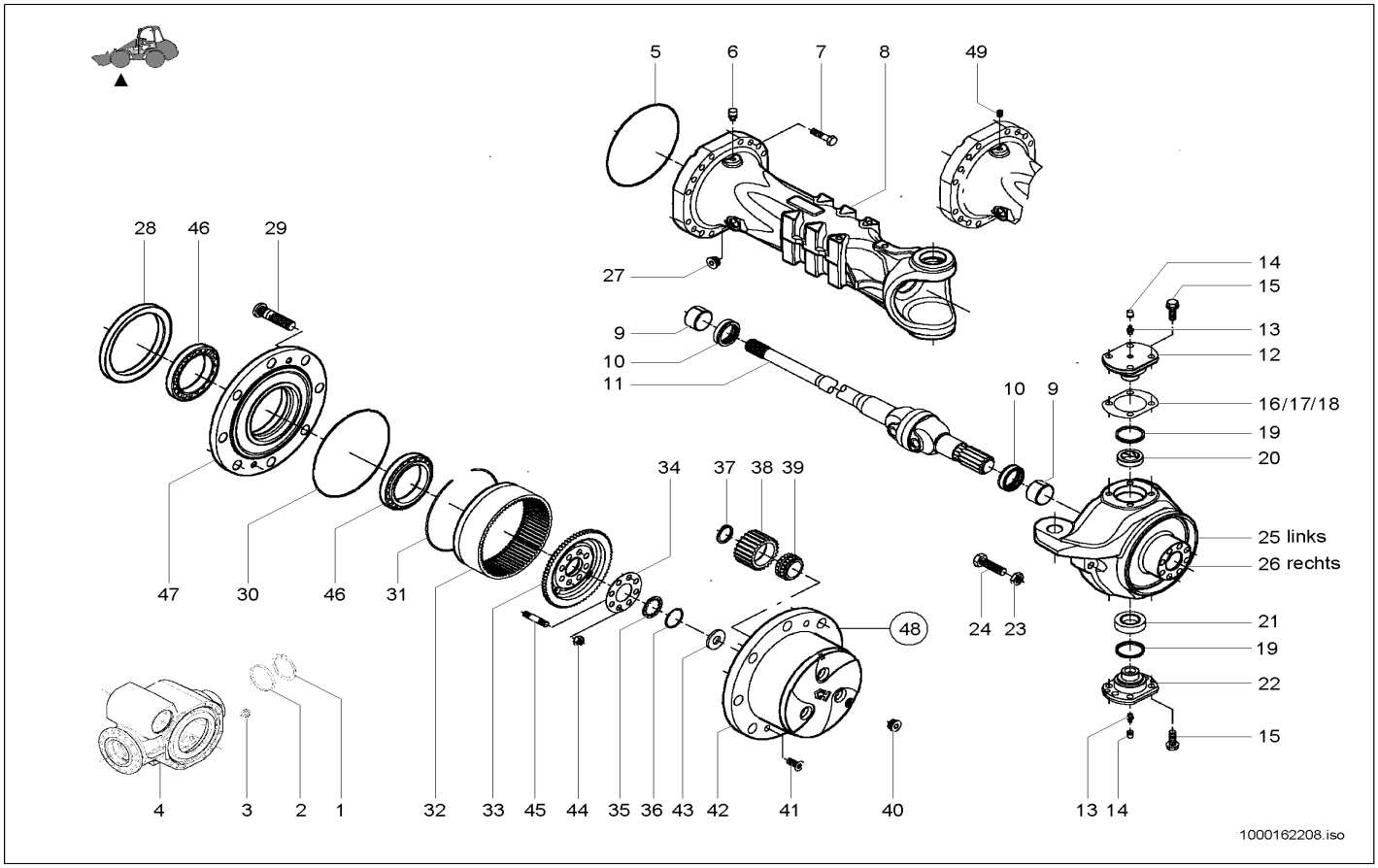


| Pos | Art.-Nr. | Anm. | Q'TY | BEZEICHNUNG | PART NAME | DESIGNATION |
|---|---|---|---|---|---|---|
| 47 | 1000143374 | | 2,00 ST | RADNABE | WHEEL HUB | MOYEU DE ROUE |
| 48 | 1000105910 | | 2,00 ST | PLANETENGEHÄUSE | PLANETARY HOUSING | BOÎTE PLANÉTAIRE |
| 49 | 1000106914 | | 1,00 ST | VERSCHLUSSSCHRAUBE | LOCK SCREW | VIS DE FERMETURE |

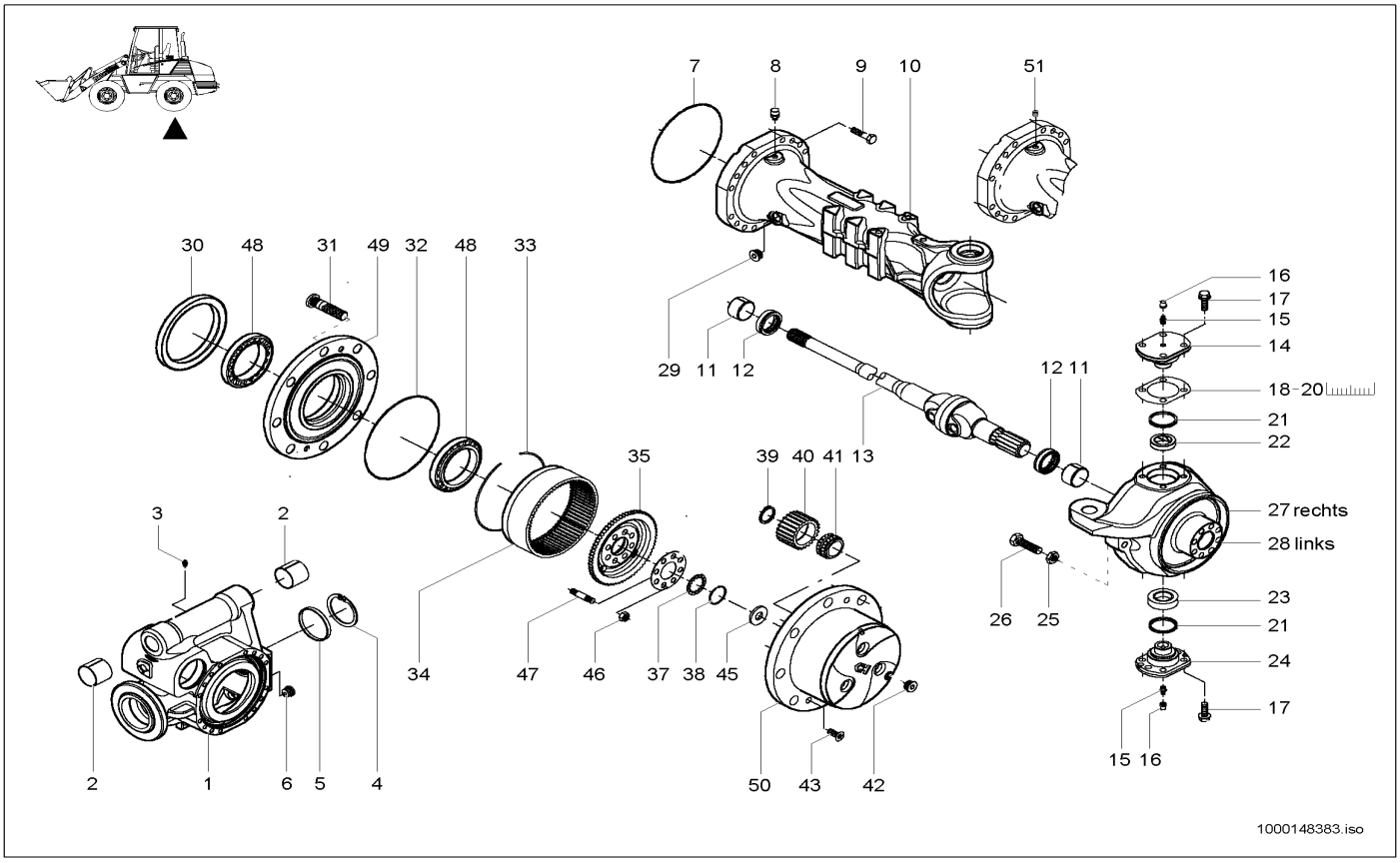


| Pos | Art.-Nr. | Anm. | Q'TY | BEZEICHNUNG | PART NAME | DESIGNATION |
|---|---|---|---|---|---|---|
| 1 | 1000143379 | | 1,00 ST | GEHÄUSE | HOUSING | BOÎTE |
| 2 | 1000143380 | | 2,00 ST | ANLAUFBUCHSE | BUSHING | BAGUE DE DÉMARRAGE |
| 3 | 1000143357 | | 1,00 ST | SCHMIERNIPPEL | GREASE NIPPLE | GRAISSEUR À BILLE |
| 4 | 1000088696 | | 1,00 ST | SICHERUNGSRING | LOCK RING | BAGUE DE SÛRETÉ |
| 5 | 1000143237 | | 1,00 ST | STOPFEN | PLUG | BOUCHON |
| 6 | 1000102388 | | 1,00 ST | MAGNETSTOPFEN | MAGNET PLUG | BOUCHON MAGNÉTIQUE |
| 7 | 1000105848 | | 2,00 ST | O-RING | O-RING | ANNEAU EN O |
| 8 | 1000113680 | | 1,00 ST | ENTLÜFTER | BREATHER | AÉRATEUR |
| 9 | 1000105843 | | 32,00 ST | SCHRAUBE | SCREW | VIS |
| 10 | 1000148361 | | 2,00 ST | ACHSGEHÄUSE | AXLE CASE | CORPS DE LA BOÎTE D'ESSIEU |
| 11 | 1000143353 | | 4,00 ST | ANLAUFBUCHSE | BUSHING | BAGUE DE DÉMARRAGE |
| 12 | 1000143354 | | 4,00 ST | DICHTRING | SEAL RING | BAGUE D'ÉTANCHÉITÉ |
| 13 | 1000148362 | | 2,00 ST | GELENK | ARTICULATION | ARTICULATION |
| 14 | 1000143356 | | 2,00 ST | BOLZEN | PIN | AXE |
| 15 | 1000143357 | | 4,00 ST | SCHMIERNIPPEL | GREASE NIPPLE | GRAISSEUR À BILLE |
| 16 | 1000088751 | | 4,00 ST | STOPFEN | PLUG | BOUCHON |
| 17 | 1000143358 | | 20,00 ST | SCHRAUBE | SCREW | VIS |
| 18 | 1000143359 | 0,15mm | 2,00 ST | EINSTELLSCHEIBE | DISC | DISQUE |
| 19 | 1000143360 | 0,2mm | 2,00 ST | EINSTELLSCHEIBE | DISC | DISQUE |
| 20 | 1000143361 | 0,5mm | 2,00 ST | EINSTELLSCHEIBE | DISC | DISQUE |
| 21 | 1000143362 | | 2,00 ST | DICHTRING | SEAL RING | BAGUE D'ÉTANCHÉITÉ |
| 22 | 1000143363 | | 2,00 ST | BUCHSE | BUSHING | BAGUE |
| 23 | 1000143364 | | 2,00 ST | BUCHSE | BUSHING | BAGUE |
| 24 | 1000143365 | | 2,00 ST | BOLZEN | PIN | AXE |
| 25 | 1000138622 | | 4,00 ST | MUTTER | NUT | ÉCROU |
| 26 | 1000088663 | | 4,00 ST | ANSCHLAG | LIMIT STOP | BATTÉE |
| 27 | 1000143366 | R | 1,00 ST | GELENKGEHÄUSE | ARTICULATION CASE | BOÎTE ARTICULÉE |
| 28 | 1000143367 | L | 1,00 ST | GELENKGEHÄUSE | ARTICULATION CASE | BOÎTE ARTICULÉE |
| 29 | 1000143368 | | 2,00 ST | STOPFEN | PLUG | BOUCHON |
| 30 | 1000143369 | | 2,00 ST | DICHTRING | SEAL RING | BAGUE D'ÉTANCHÉITÉ |
| 31 | 1000143370 | | 16,00 ST | RADBOLZEN | WHEEL BOLT | AXE DE ROUE |
| 32 | 1000105902 | | 2,00 ST | O-RING | O-RING | ANNEAU EN O |
| 33 | 1000105857 | | 2,00 ST | SICHERUNGSRING | LOCK RING | BAGUE DE SÛRETÉ |
| 34 | 1000105901 | | 2,00 ST | ZAHNKRANZ | RING GEAR | COURONNE DENTÉE |
| 35 | 1000105883 | | 2,00 ST | HOHLRADTRÄGER | HOLLOW WHEEL SUPPORT | SUPPORT DE ROUE CREUSE |
| 36 | 1000143371 | | 2,00 ST | SICHERUNGSBLECH | LOCK PLATE | FREIN EN TÔLE |
| 37 | 1000143372 | | 2,00 ST | RING | RING | ANNEAU |
| 38 | 1000143373 | | 2,00 ST | SICHERUNGSRING | LOCK RING | BAGUE DE SÛRETÉ |
| 39 | 1000105888 | | 6,00 ST | SICHERUNGSRING | LOCK RING | BAGUE DE SÛRETÉ |
| 40 | 1000105889 | | 6,00 ST | PLANETENRAD | PLANET GEAR | ROUE PLANÉTAIRE |
| 41 | 1000105890 | | 6,00 ST | LAGER | BEARING | PALIER |
| 42 | 1000105891 | | 2,00 ST | STOPFEN | PLUG | BOUCHON |
| 43 | 1000105893 | | 4,00 ST | SENKSCHRAUBE | SINKSCREW | VIS À TÊTE NOYÉE |
| 44 | 1000105894 | | 2,00 ST | PLANETENGEHÄUSE | PLANETARY HOUSING | BOÎTE PLANÉTAIRE |
| 45 | 1000105897 | | 2,00 ST | ANLAUFSCHEIBE | WASHER | DISQUE DE DÉMARRAGE |
| 46 | 1000105898 | | 16,00 ST | MUTTER | NUT | ÉCROU |

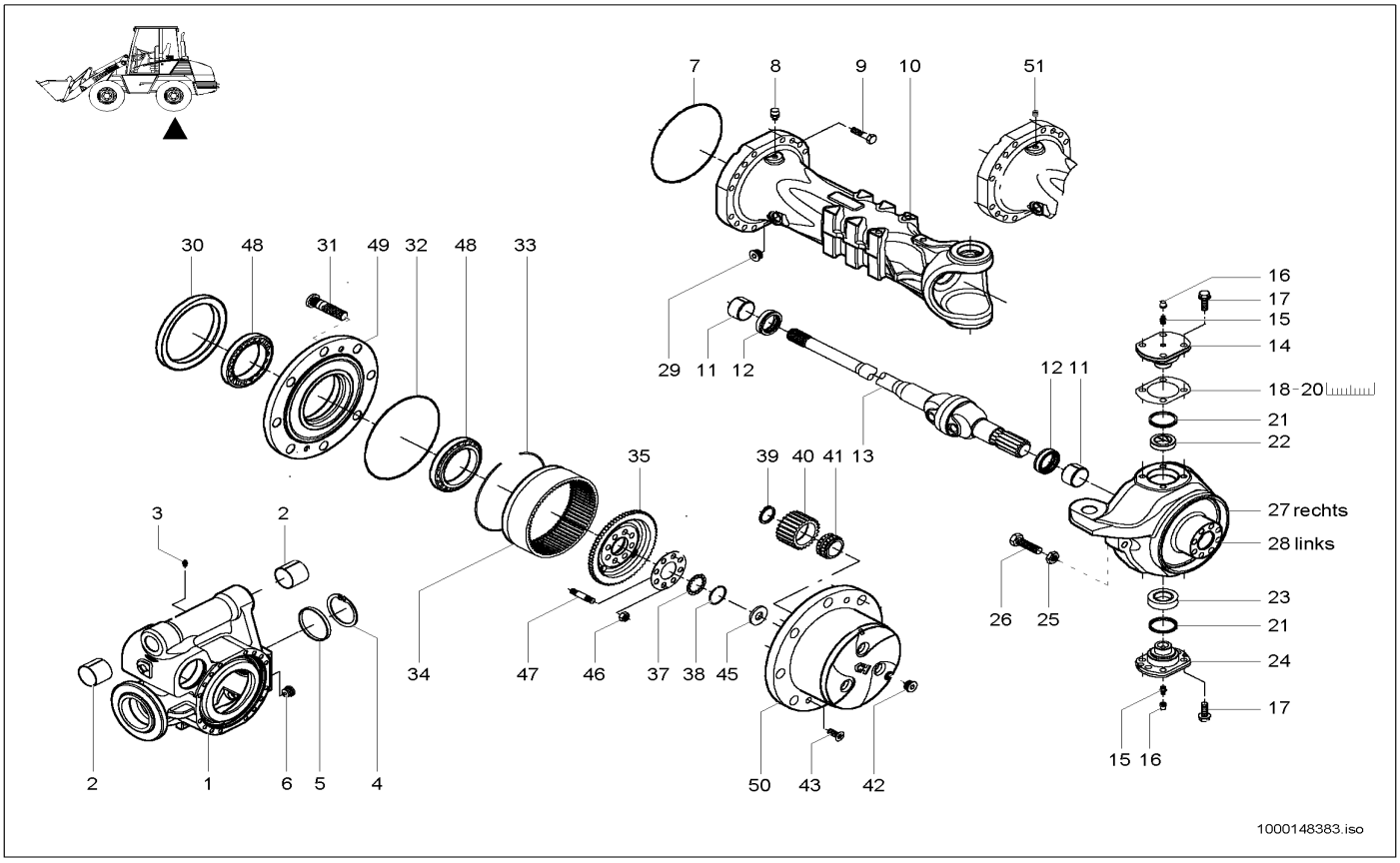


| Pos | Art.-Nr. | Anm. | Q'TY | BEZEICHNUNG | PART NAME | DESIGNATION |
|---|---|---|---|---|---|---|
| 47 | 1000105899 | | 16,00 ST | STIFTSCHRAUBE | STUD | GOUJON |
| 48 | 1000105854 | | 4,00 ST | LAGER | BEARING | PALIER |
| 49 | 1000143374 | | 2,00 ST | RADNABE | WHEEL HUB | MOYEU DE ROUE |
| 50 | 1000105910 | | 2,00 ST | PLANETENGEHÄUSE | PLANETARY HOUSING | BOÎTE PLANÉTAIRE |
| 51 | 1000106914 | | 1,00 ST | VERSCHLUSSSCHRAUBE | LOCK SCREW | VIS DE FERMETURE |

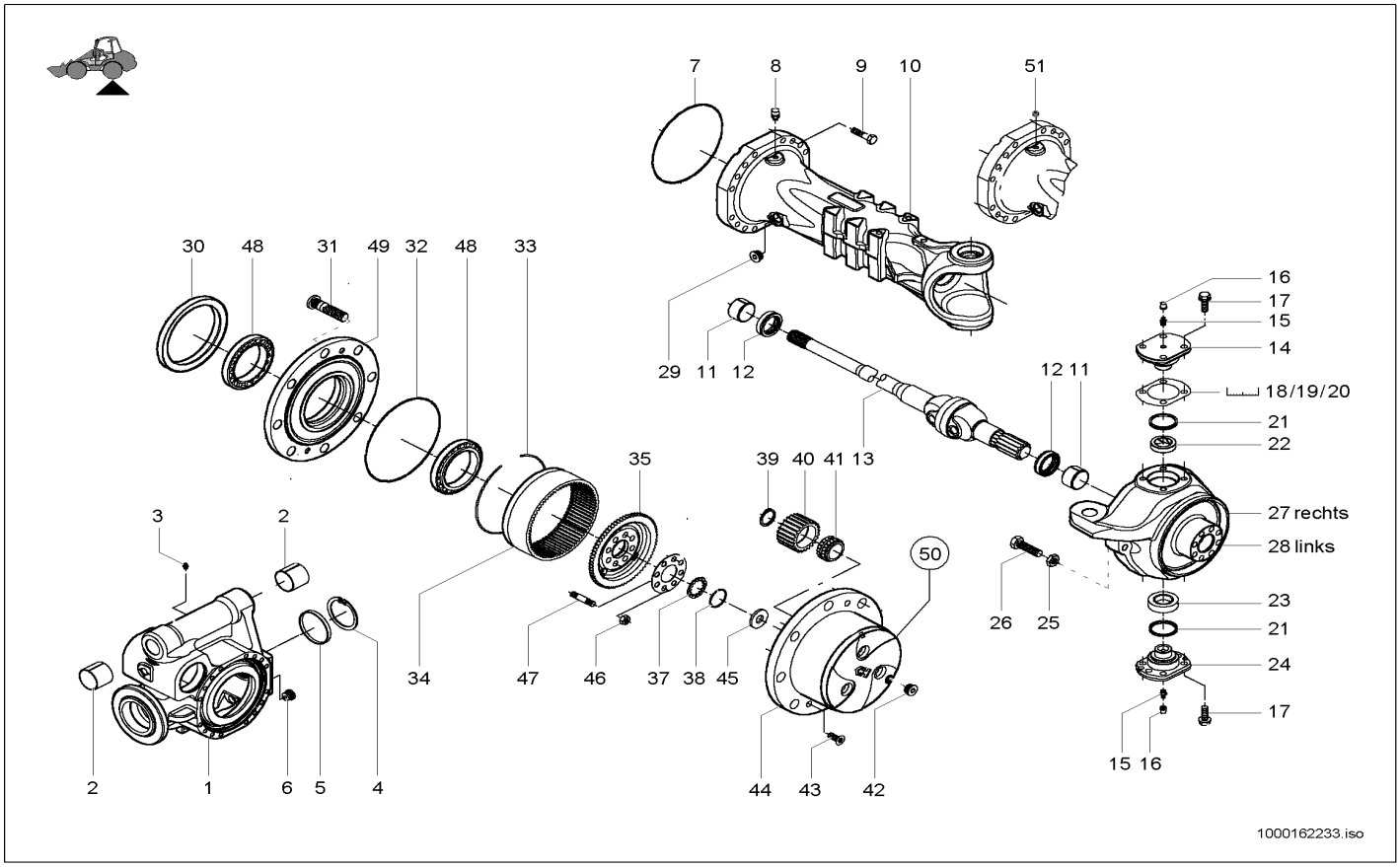


| Pos | Art.-Nr. | Anm. | Q'TY | BEZEICHNUNG | PART NAME | DESIGNATION |
|---|---|---|---|---|---|---|
| 1 | 1000143379 | | 1,00 ST | GEHÄUSE | HOUSING | BOÎTE |
| 2 | 1000143380 | | 2,00 ST | ANLAUFBUCHSE | BUSHING | BAGUE DE DÉMARRAGE |
| 3 | 1000143357 | | 1,00 ST | SCHMIERNIPPEL | GREASE NIPPLE | GRAISSEUR À BILLE |
| 4 | 1000088696 | | 1,00 ST | SICHERUNGSRING | LOCK RING | BAGUE DE SÛRETÉ |
| 5 | 1000143237 | | 1,00 ST | STOPFEN | PLUG | BOUCHON |
| 6 | 1000102388 | | 1,00 ST | MAGNETSTOPFEN | MAGNET PLUG | BOUCHON MAGNÉTIQUE |
| 7 | 1000105848 | | 2,00 ST | O-RING | O-RING | ANNEAU EN O |
| 8 | 1000113680 | | 1,00 ST | ENTLÜFTER | BREATHER | AÉRATEUR |
| 9 | 1000105843 | | 32,00 ST | SCHRAUBE | SCREW | VIS |
| 10 | 1000148361 | | 2,00 ST | ACHSGEHÄUSE | AXLE CASE | CORPS DE LA BOÎTE D'ESSIEU |
| 11 | 1000143353 | | 4,00 ST | ANLAUFBUCHSE | BUSHING | BAGUE DE DÉMARRAGE |
| 12 | 1000143354 | | 4,00 ST | DICHTRING | SEAL RING | BAGUE D'ÉTANCHÉITÉ |
| 13 | 1000148362 | | 2,00 ST | GELENK | ARTICULATION | ARTICULATION |
| 14 | 1000143356 | | 2,00 ST | BOLZEN | PIN | AXE |
| 15 | 1000143357 | | 4,00 ST | SCHMIERNIPPEL | GREASE NIPPLE | GRAISSEUR À BILLE |
| 16 | 1000088751 | | 4,00 ST | STOPFEN | PLUG | BOUCHON |
| 17 | 1000143358 | | 20,00 ST | SCHRAUBE | SCREW | VIS |
| 18 | 1000143359 | 0,15mm | 2,00 ST | EINSTELLSCHEIBE | DISC | DISQUE |
| 19 | 1000143360 | 0,2mm | 2,00 ST | EINSTELLSCHEIBE | DISC | DISQUE |
| 20 | 1000143361 | 0,5mm | 2,00 ST | EINSTELLSCHEIBE | DISC | DISQUE |
| 21 | 1000143362 | | 2,00 ST | DICHTRING | SEAL RING | BAGUE D'ÉTANCHÉITÉ |
| 22 | 1000143363 | | 2,00 ST | BUCHSE | BUSHING | BAGUE |
| 23 | 1000143364 | | 2,00 ST | BUCHSE | BUSHING | BAGUE |
| 24 | 1000143365 | | 2,00 ST | BOLZEN | PIN | AXE |
| 25 | 1000138622 | | 4,00 ST | MUTTER | NUT | ÉCROU |
| 26 | 1000088663 | | 4,00 ST | ANSCHLAG | LIMIT STOP | BATTÉE |
| 27 | 1000162184 | R | 1,00 ST | GELENKGEHÄUSE | ARTICULATION CASE | BOÎTE ARTICULÉE |
| 28 | 1000162186 | L | 1,00 ST | GELENKGEHÄUSE | ARTICULATION CASE | BOÎTE ARTICULÉE |
| 29 | 1000143368 | | 2,00 ST | STOPFEN | PLUG | BOUCHON |
| 30 | 1000143369 | | 2,00 ST | DICHTRING | SEAL RING | BAGUE D'ÉTANCHÉITÉ |
| 31 | 1000143370 | | 16,00 ST | RADBOLZEN | WHEEL BOLT | AXE DE ROUE |
| 32 | 1000105902 | | 2,00 ST | O-RING | O-RING | ANNEAU EN O |
| 33 | 1000105857 | | 2,00 ST | SICHERUNGSRING | LOCK RING | BAGUE DE SÛRETÉ |
| 34 | 1000105901 | | 2,00 ST | ZAHNKRANZ | RING GEAR | COURONNE DENTÉE |
| 35 | 1000105883 | | 2,00 ST | HOHLRADTRÄGER | HOLLOW WHEEL SUPPORT | SUPPORT DE ROUE CREUSE |
| 36 | 1000143371 | | 2,00 ST | SICHERUNGSBLECH | LOCK PLATE | FREIN EN TÔLE |
| 37 | 1000143372 | | 2,00 ST | RING | RING | ANNEAU |
| 38 | 1000143373 | | 2,00 ST | SICHERUNGSRING | LOCK RING | BAGUE DE SÛRETÉ |
| 39 | 1000105888 | | 6,00 ST | SICHERUNGSRING | LOCK RING | BAGUE DE SÛRETÉ |
| 40 | 1000105889 | | 6,00 ST | PLANETENRAD | PLANET GEAR | ROUE PLANÉTAIRE |
| 41 | 1000105890 | | 6,00 ST | LAGER | BEARING | PALIER |
| 42 | 1000105891 | | 2,00 ST | STOPFEN | PLUG | BOUCHON |
| 43 | 1000105893 | | 4,00 ST | SENKSCHRAUBE | SINKSCREW | VIS À TÊTE NOYÉE |
| 44 | 1000105894 | | 2,00 ST | PLANETENGEHÄUSE | PLANETARY HOUSING | BOÎTE PLANÉTAIRE |
| 45 | 1000105897 | | 2,00 ST | ANLAUFSCHEIBE | WASHER | DISQUE DE DÉMARRAGE |
| 46 | 1000105898 | | 16,00 ST | MUTTER | NUT | ÉCROU |

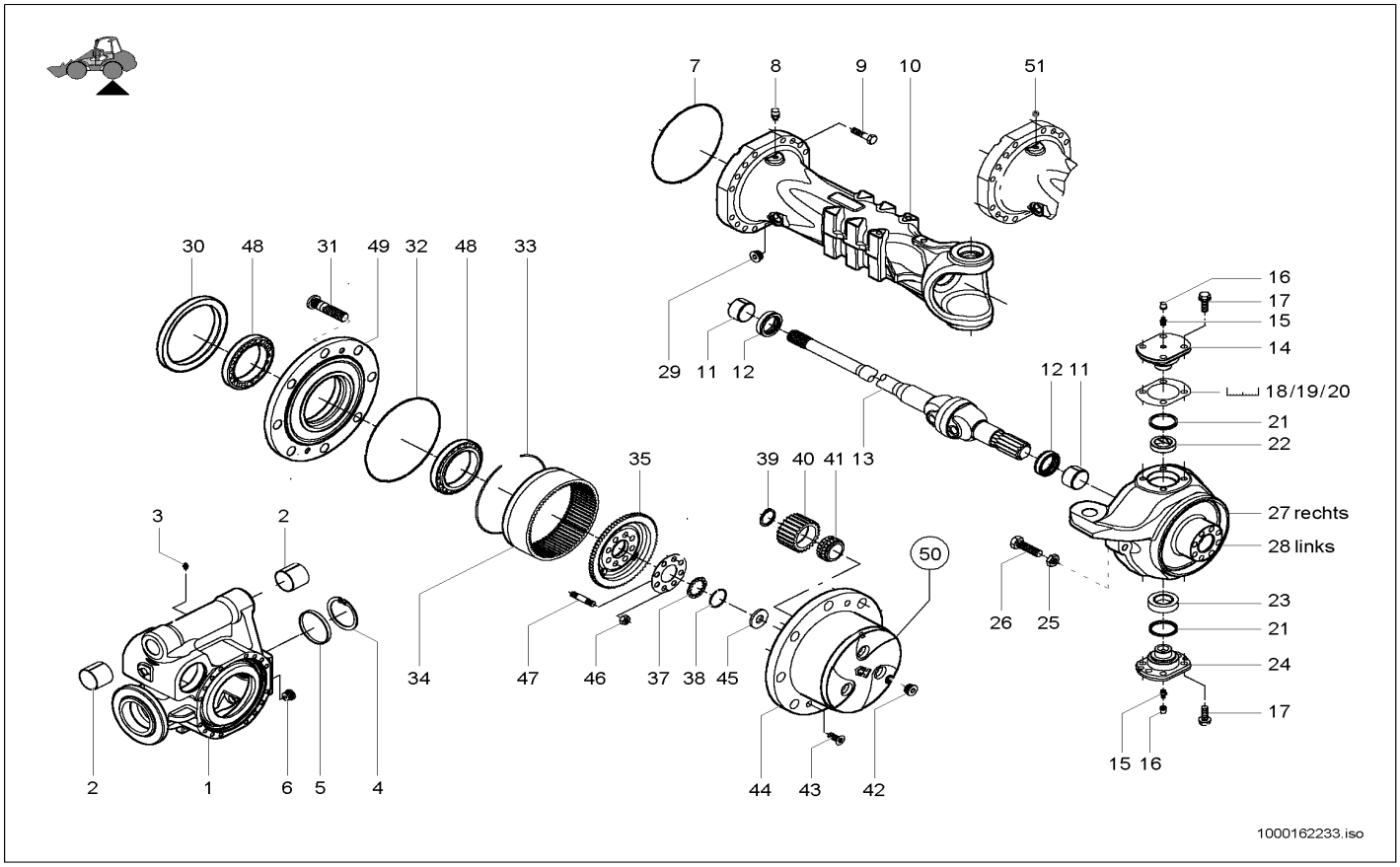


| Pos | Art.-Nr. | Anm. | Q'TY | BEZEICHNUNG | PART NAME | DESIGNATION |
|---|---|---|---|---|---|---|
| 47 | 1000105899 | | 16,00 ST | STIFTSCHRAUBE | STUD | GOUJON |
| 48 | 1000105854 | | 4,00 ST | LAGER | BEARING | PALIER |
| 49 | 1000143374 | | 2,00 ST | RADNABE | WHEEL HUB | MOYEU DE ROUE |
| 50 | 1000105910 | | 2,00 ST | PLANETENGEHÄUSE | PLANETARY HOUSING | BOÎTE PLANÉTAIRE |
| 51 | 1000106914 | | 1,00 ST | VERSCHLUSSSCHRAUBE | LOCK SCREW | VIS DE FERMETURE |

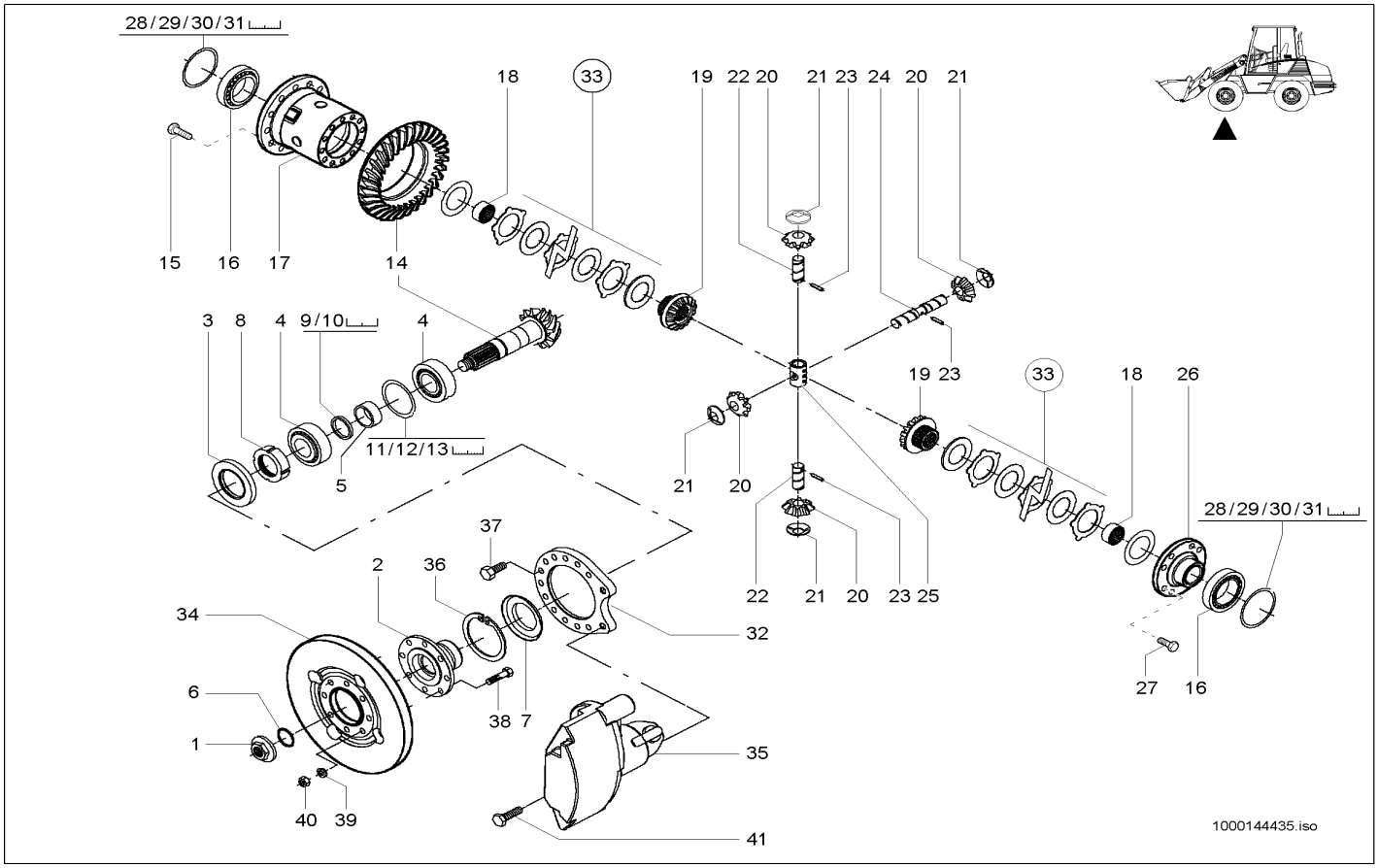


| Pos | Art.-Nr. | Anm. | Q'TY | BEZEICHNUNG | PART NAME | DESIGNATION |
|---|---|---|---|---|---|---|
| 1 | 1000088765 | | 1,00 ST | MUTTER | NUT | ÉCROU |
| 2 | 1000143239 | | 1,00 ST | FLANSCH | FLANGE | BRIDE |
| 3 | 1000143240 | | 1,00 ST | DICHTRING | SEAL RING | BAGUE D'ÉTANCHÉITÉ |
| 4 | 1000143291 | | 2,00 ST | LAGER | BEARING | PALIER |
| 5 | 1000102425 | | 1,00 ST | DISTANZRING | SHIM | ANNEAU D'ÉCARTEMENT |
| 6 | 1000143292 | | 1,00 ST | O-RING | O-RING | ANNEAU EN O |
| 7 | 1000143294 | | 1,00 ST | BLECH | PLATE | TÔLE |
| 8 | 1000143295 | | 1,00 ST | NUTMUTTER | SET NUT | ÉCROU DE RAINURE |
| 9 | 1000143296 | 0,2mm | 1,00 ST | RING | RING | ANNEAU |
| 10 | 1000143297 | 0,5mm | 1,00 ST | RING | RING | ANNEAU |
| 11 | 1000143298 | 0,15mm | 1,00 ST | EINSTELLSCHEIBE | DISC | DISQUE |
| 12 | 1000143299 | 0,2mm | 1,00 ST | EINSTELLSCHEIBE | DISC | DISQUE |
| 13 | 1000143300 | 0,5mm | 1,00 ST | EINSTELLSCHEIBE | DISC | DISQUE |
| 14 | 1000143301 | | 1,00 ST | TELLERRADPAAR | BEVEL GEAR PAIR | PAIRE DE COURONNE DE DIFFÉRENTIEL |
| 15 | 1000102590 | | 12,00 ST | SCHRAUBE | SCREW | VIS |
| 16 | 1000102596 | | 2,00 ST | KEGELROLLENLAGER | TAPER ROLLER BEARING | ROULEMENT À ROULEAUX CONIQUES |
| 17 | 1000143302 | | 1,00 ST | DIFFERENTIALGEHÄUSE | DIFFERENTIAL HOUSING | BOÎTE DIFFÉRENTIELLE |
| 18 | 1000143303 | | 2,00 ST | ANLAUFBUCHSE | BUSHING | BAGUE DE DÉMARRAGE |
| 19 | 1000143304 | | 2,00 ST | AUSGLEICHSWELLENRAD | DIFF.SHAFT GEAR | ROUE D'ARBRE DE COMPENSATION |
| 20 | 1000102603 | | 4,00 ST | KEGELRAD | PINION | ROUE CONIQUE |
| 21 | 1000102605 | | 4,00 ST | ANLAUFSCHEIBE | WASHER | DISQUE DE DÉMARRAGE |
| 22 | 1000102606 | | 2,00 ST | BOLZEN | PIN | AXE |
| 23 | 1000102607 | | 3,00 ST | STIFT | PIN | GOUPILLE |
| 24 | 1000102608 | | 1,00 ST | BOLZEN | PIN | AXE |
| 25 | 1000162236 | | 1,00 ST | KREUZSTÜCK | CROSS PIECE | PIÈCE EN CROIX |
| 26 | 1000143306 | | 1,00 ST | DECKEL | COVER | COUVERCLE |
| 27 | 1000106910 | | 8,00 ST | 6KT-SCHRAUBE | HEX SCREW | VIS À TÊTE HEXAGONALE |
| 28 | 1000143307 | 0,15mm | 2,00 ST | EINSTELLSCHEIBE | DISC | DISQUE |
| 29 | 1000143308 | 0,2mm | 2,00 ST | EINSTELLSCHEIBE | DISC | DISQUE |
| 30 | 1000143309 | 0,5mm | 2,00 ST | EINSTELLSCHEIBE | DISC | DISQUE |
| 31 | 1000143310 | 1,0mm | 2,00 ST | EINSTELLSCHEIBE | DISC | DISQUE |
| 32 | 1000143311 | | 2,00 ST | HALTERUNG | BRACKET | FIXATION |
| 33 | 1000143312 | | 1,00 ST | KUPPLUNGSSCHEIBE | CLUTCH DISC | DISQUE DE LA FRICTION |
| 34 | 1000143313 | | 1,00 ST | BREMSSCHEIBE | BRAKE DISC | DISQUE DE FREIN |
| 35 | 1000143314 | | 1,00 ST | BREMSSATTEL | BRAKE CALLIPER | ÉTRIER DE FREINAGE |
| 36 | 1000143336 | | 1,00 ST | SICHERUNGSRING | LOCK RING | BAGUE DE SÛRETÉ |
| 37 | 1000143337 | | 12,00 ST | 6KT-SCHRAUBE | HEX SCREW | VIS À TÊTE HEXAGONALE |
| 38 | 1000143338 | | 8,00 ST | 6KT-SCHRAUBE | HEX SCREW | VIS À TÊTE HEXAGONALE |
| 39 | 1000143339 | | 8,00 ST | FEDERSCHEIBE | SPRING RING | RONDELLE À RESSORT |
| 40 | 1000143340 | | 8,00 ST | MUTTER | NUT | ÉCROU |
| 41 | 1000143351 | | 2,00 ST | 6KT-SCHRAUBE | HEX SCREW | VIS À TÊTE HEXAGONALE |

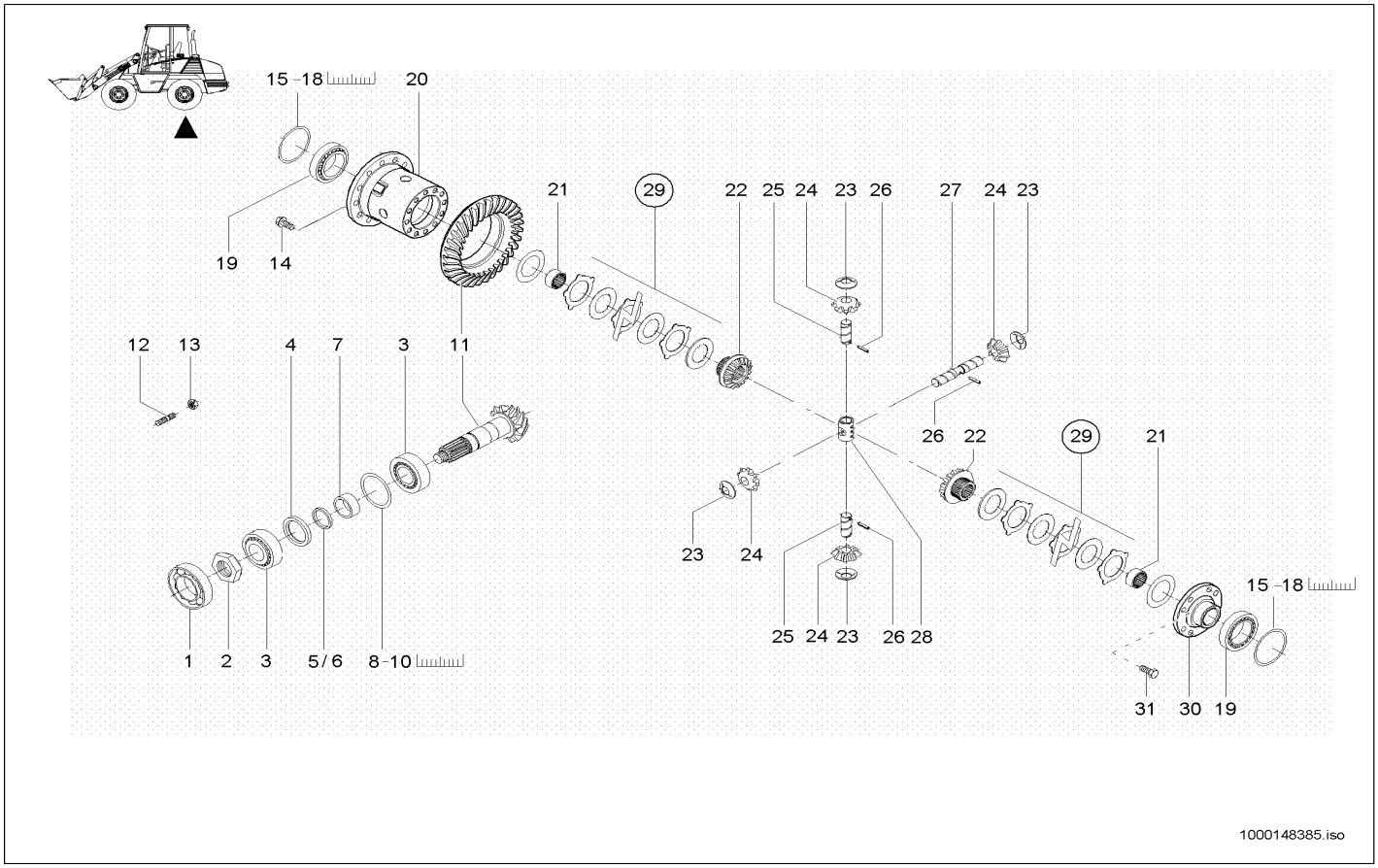


| Pos | Art.-Nr. | Anm. | Q'TY | BEZEICHNUNG | PART NAME | DESIGNATION |
|---|---|---|---|---|---|---|
| 1 | 1000084962 | | 1,00 ST | RILLENKUGELLAGER | BALL BEARING | ROULEMENT À RAINURE |
| 2 | 1000143385 | | 1,00 ST | MUTTER | NUT | ÉCROU |
| 3 | 1000143381 | | 2,00 ST | LAGER | BEARING | PALIER |
| 4 | 1000143382 | | 1,00 ST | DICHTRING | SEAL RING | BAGUE D'ÉTANCHÉITÉ |
| 5 | 1000143296 | 0,2mm | 1,00 ST | RING | RING | ANNEAU |
| 6 | 1000143297 | 0,5mm | 1,00 ST | RING | RING | ANNEAU |
| 7 | 1000106924 | | 1,00 ST | DISTANZRING | SHIM | ANNEAU D'ÉCARTEMENT |
| 8 | 1000143298 | 0,15mm | 1,00 ST | EINSTELLSCHEIBE | DISC | DISQUE |
| 9 | 1000143299 | 0,2mm | 1,00 ST | EINSTELLSCHEIBE | DISC | DISQUE |
| 10 | 1000143300 | 0,5mm | 1,00 ST | EINSTELLSCHEIBE | DISC | DISQUE |
| 11 | 1000148384 | | 1,00 ST | TELLERRADPAAR | BEVEL GEAR PAIR | PAIRE DE COURONNE DE DIFFÉRENTIEL |
| 12 | 1000143384 | | 8,00 ST | STIFTSCHRAUBE | STUD | GOUJON |
| 13 | 1000144462 | | 8,00 ST | MUTTER | NUT | ÉCROU |
| 14 | 1000102590 | | 12,00 ST | SCHRAUBE | SCREW | VIS |
| 15 | 1000143307 | 0,15mm | 2,00 ST | EINSTELLSCHEIBE | DISC | DISQUE |
| 16 | 1000143308 | 0,2mm | 2,00 ST | EINSTELLSCHEIBE | DISC | DISQUE |
| 17 | 1000143309 | 0,5mm | 2,00 ST | EINSTELLSCHEIBE | DISC | DISQUE |
| 18 | 1000143310 | 1,0mm | 2,00 ST | EINSTELLSCHEIBE | DISC | DISQUE |
| 19 | 1000102596 | | 2,00 ST | KEGELROLLENLAGER | TAPER ROLLER BEARING | ROULEMENT À ROULEAUX CONIQUES |
| 20 | 1000143302 | | 1,00 ST | DIFFERENTIALGEHÄUSE | DIFFERENTIAL HOUSING | BOÎTE DIFFÉRENTIELLE |
| 21 | 1000143303 | | 2,00 ST | ANLAUFBUCHSE | BUSHING | BAGUE DE DÉMARRAGE |
| 22 | 1000143304 | | 2,00 ST | AUSGLEICHSWELLENRAD | DIFF.SHAFT GEAR | ROUE D'ARBRE DE COMPENSATION |
| 23 | 1000102605 | | 4,00 ST | ANLAUFSCHEIBE | WASHER | DISQUE DE DÉMARRAGE |
| 24 | 1000102603 | | 4,00 ST | KEGELRAD | PINION | ROUE CONIQUE |
| 25 | 1000102606 | | 2,00 ST | BOLZEN | PIN | AXE |
| 26 | 1000102607 | | 3,00 ST | STIFT | PIN | GOUPILLE |
| 27 | 1000102608 | | 1,00 ST | BOLZEN | PIN | AXE |
| 28 | 1000162236 | | 1,00 ST | KREUZSTÜCK | CROSS PIECE | PIÈCE EN CROIX |
| 29 | 1000143312 | | 2,00 ST | KUPPLUNGSSCHEIBE | CLUTCH DISC | DISQUE DE LA FRICTION |
| 30 | 1000143306 | | 1,00 ST | DECKEL | COVER | COUVERCLE |
| 31 | 1000106910 | | 8,00 ST | 6KT-SCHRAUBE | HEX SCREW | VIS À TÊTE HEXAGONALE |

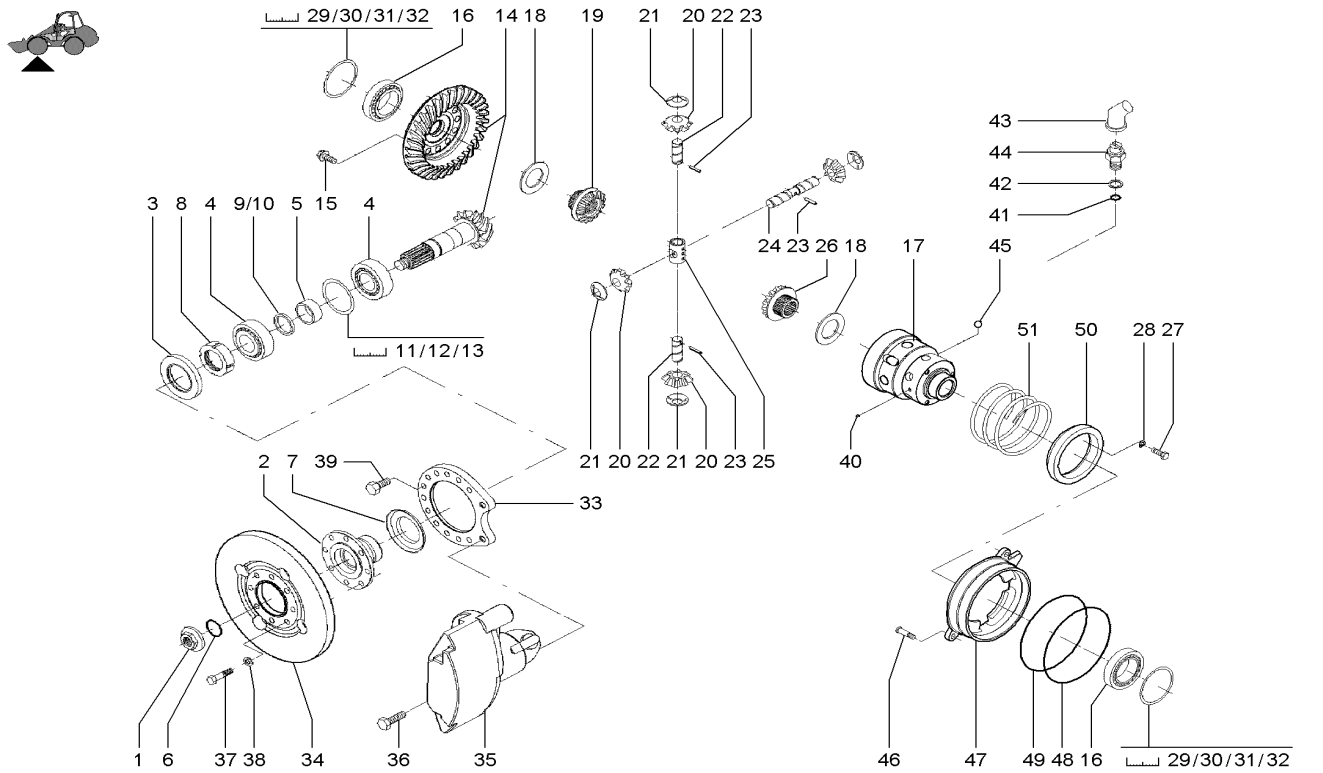


| Pos | Art.-Nr. | Anm. | Q'TY | BEZEICHNUNG | PART NAME | DESIGNATION |
|---|---|---|---|---|---|---|
| 1 | 1000088765 | | 1,00 ST | MUTTER | NUT | ÉCROU |
| 2 | 1000162062 | | 1,00 ST | FLANSCH | FLANGE | BRIDE |
| 3 | 1000143240 | | 1,00 ST | DICHTRING | SEAL RING | BAGUE D'ÉTANCHÉITÉ |
| 4 | 1000143291 | | 2,00 ST | LAGER | BEARING | PALIER |
| 5 | 1000102425 | | 1,00 ST | DISTANZRING | SHIM | ANNEAU D'ÉCARTEMENT |
| 6 | 1000143292 | | 1,00 ST | O-RING | O-RING | ANNEAU EN O |
| 7 | 1000143294 | | 1,00 ST | BLECH | PLATE | TÔLE |
| 8 | 1000143295 | | 1,00 ST | NUTMUTTER | SET NUT | ÉCROU DE RAINURE |
| 9 | 1000143296 | 0,2mm | 1,00 ST | RING | RING | ANNEAU |
| 10 | 1000143297 | 0,5mm | 1,00 ST | RING | RING | ANNEAU |
| 11 | 1000143298 | 0,15mm | 1,00 ST | EINSTELLSCHEIBE | DISC | DISQUE |
| 12 | 1000143299 | 0,2mm | 1,00 ST | EINSTELLSCHEIBE | DISC | DISQUE |
| 13 | 1000143300 | 0,5mm | 1,00 ST | EINSTELLSCHEIBE | DISC | DISQUE |
| 14 | 1000162064 | | 1,00 ST | TELLERRADPAAR | BEVEL GEAR PAIR | PAIRE DE COURONNE DE DIFFÉRENTIEL |
| 15 | 1000162065 | | 12,00 ST | SCHRAUBE | SCREW | VIS |
| 16 | 1000102596 | | 2,00 ST | KEGELROLLENLAGER | TAPER ROLLER BEARING | ROULEMENT À ROULEAUX CONIQUES |
| 17 | 1000162063 | | 1,00 ST | DIFFERENTIALGEHÄUSE | DIFFERENTIAL HOUSING | BOÎTE DIFFÉRENTIELLE |
| 18 | 1000102600 | | 2,00 ST | ANLAUFSCHEIBE | WASHER | DISQUE DE DÉMARRAGE |
| 19 | 1000162066 | | 1,00 ST | AUSGLEICHSWELLENRAD | DIFF.SHAFT GEAR | ROUE D'ARBRE DE COMPENSATION |
| 20 | 1000102603 | | 4,00 ST | KEGELRAD | PINION | ROUE CONIQUE |
| 21 | 1000102605 | | 4,00 ST | ANLAUFSCHEIBE | WASHER | DISQUE DE DÉMARRAGE |
| 22 | 1000102606 | | 2,00 ST | BOLZEN | PIN | AXE |
| 23 | 1000102607 | | 3,00 ST | STIFT | PIN | GOUPILLE |
| 24 | 1000102608 | | 1,00 ST | BOLZEN | PIN | AXE |
| 25 | 1000162236 | | 1,00 ST | KREUZSTÜCK | CROSS PIECE | PIÈCE EN CROIX |
| 26 | 1000162067 | | 1,00 ST | AUSGLEICHSWELLENRAD | DIFF.SHAFT GEAR | ROUE D'ARBRE DE COMPENSATION |
| 27 | 1000162092 | | 3,00 ST | 6KT-SCHRAUBE | HEX SCREW | VIS À TÊTE HEXAGONALE |
| 28 | 1000162093 | 0,15mm | 1,00 ST | SCHEIBE | WASHER | RONDELLE |
| 29 | 1000143307 | 0,2mm | 2,00 ST | EINSTELLSCHEIBE | DISC | DISQUE |
| 30 | 1000143308 | 0,5mm | 2,00 ST | EINSTELLSCHEIBE | DISC | DISQUE |
| 31 | 1000143309 | 1,0mm | 2,00 ST | EINSTELLSCHEIBE | DISC | DISQUE |
| 32 | 1000143310 | | 2,00 ST | EINSTELLSCHEIBE | DISC | DISQUE |
| 33 | 1000162069 | | 1,00 ST | HALTERUNG | BRACKET | FIXATION |
| 34 | 1000143313 | | 1,00 ST | BREMSSCHEIBE | BRAKE DISC | DISQUE DE FREIN |
| 35 | 1000143314 | | 1,00 ST | BREMSSATTEL | BRAKE CALLIPER | ÉTRIER DE FREINAGE |
| 36 | 1000162068 | | 2,00 ST | 6KT-SCHRAUBE | HEX SCREW | VIS À TÊTE HEXAGONALE |
| 37 | 1000143338 | | 8,00 ST | 6KT-SCHRAUBE | HEX SCREW | VIS À TÊTE HEXAGONALE |
| 38 | 1000143339 | | 8,00 ST | FEDERSCHEIBE | SPRING RING | RONDELLE À RESSORT |
| 39 | 1000143337 | | 12,00 ST | 6KT-SCHRAUBE | HEX SCREW | VIS À TÊTE HEXAGONALE |
| 40 | 1000162099 | | 1,00 ST | KUGEL | BALL | BOULE |
| 41 | 1000088710 | | 1,00 ST | O-RING | O-RING | ANNEAU EN O |
| 42 | 1000088719 | | 1,00 ST | DICHTRING | SEAL RING | BAGUE D'ÉTANCHÉITÉ |
| 43 | 1000150365 | | 1,00 ST | SCHUTZKAPPE | PROTECTING CAP | CAPOT DE PROTECTION |
| 44 | 1000150364 | | 1,00 ST | ANLASSERSPERRE | STARTER BARRIER | BARRIÈRE D'AMORCE |
| 45 | 1000162100 | | 6,00 ST | KUGEL | BALL | BOULE |
| 46 | 1000162094 | | 2,00 ST | SCHRAUBE | SCREW | VIS |

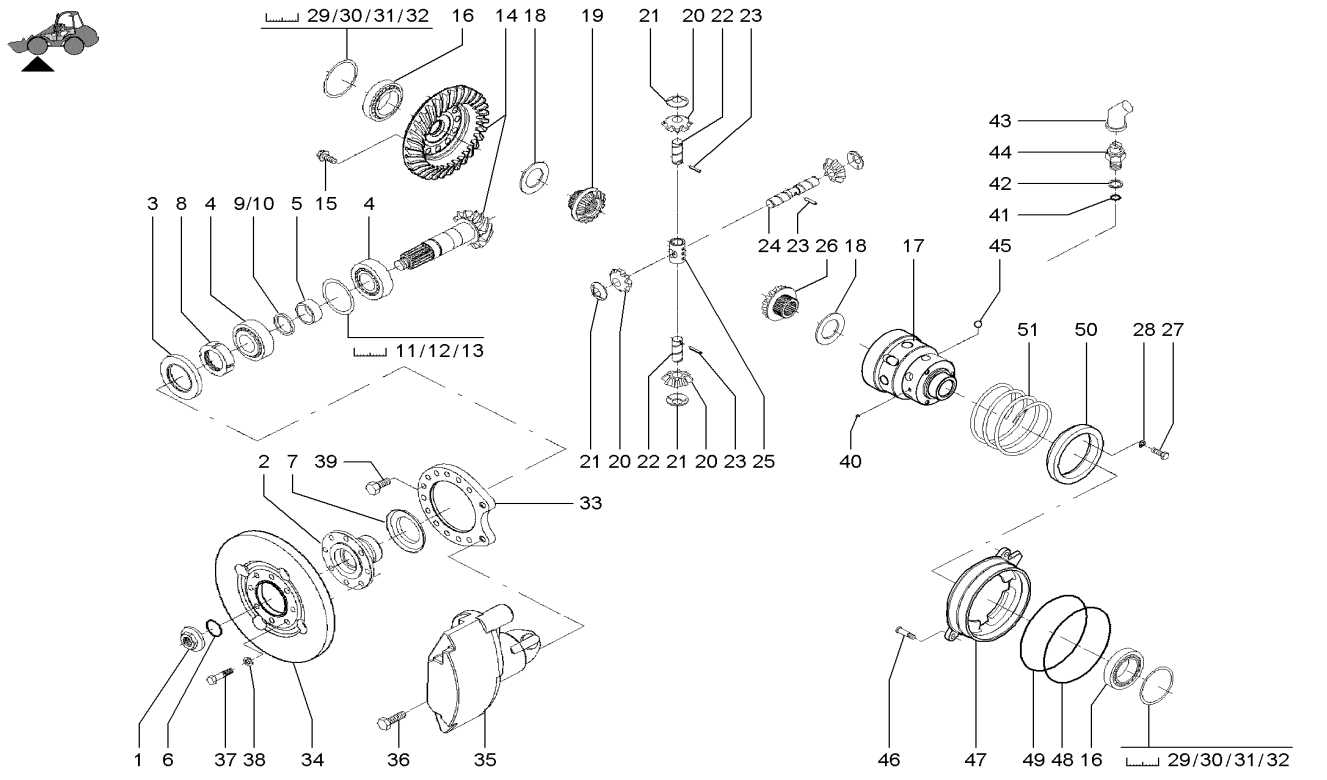


| Pos | Art.-Nr. | Anm. | Q'TY | BEZEICHNUNG | PART NAME | DESIGNATION |
|---|---|---|---|---|---|---|
| 47 | 1000162095 | | 1,00 ST | KOLBEN | PISTON | PISTON |
| 48 | 1000162097 | | 1,00 ST | O-RING | O-RING | ANNEAU EN O |
| 49 | 1000162096 | | 1,00 ST | RING | RING | ANNEAU |
| 50 | 1000162091 | | 1,00 ST | SCHALTMUFFE | SHIFT SLEEVE | MANCHON DE CHANGEMENT DE VITESSES |
| 51 | 1000162070 | | 1,00 ST | DRUCKFEDER | PRESSURE SPRING | RESSORT DE PRESSION |

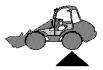

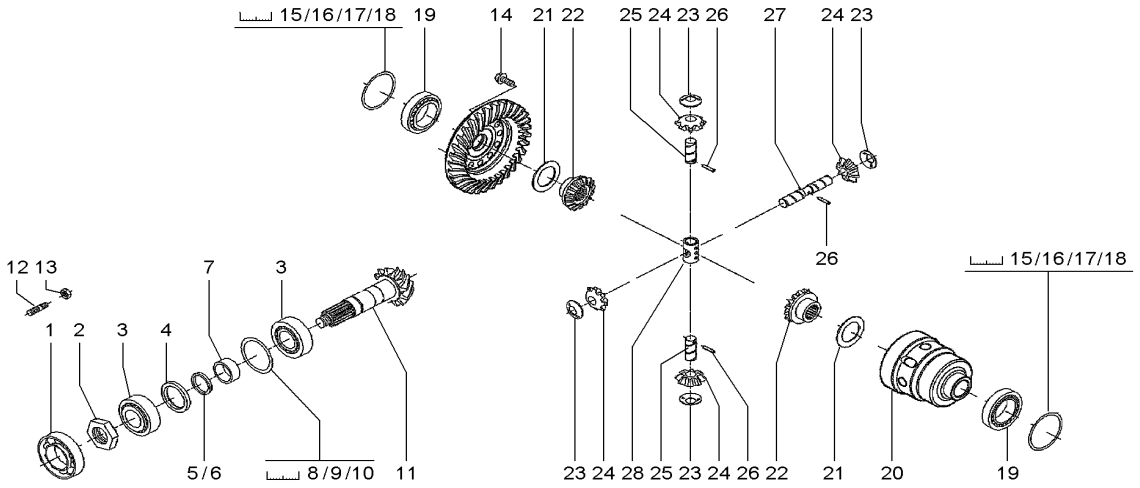


1000162238.iso

| Pos | Art.-Nr. | Anm. | Q'TY | BEZEICHNUNG | PART NAME | DESIGNATION |
|---|---|---|---|---|---|---|
| 1 | 1000084962 | | 1,00 ST | RILLENKUGELLAGER | BALL BEARING | ROULEMENT À RAINURE |
| 2 | 1000143385 | | 1,00 ST | MUTTER | NUT | ÉCROU |
| 3 | 1000143381 | | 2,00 ST | LAGER | BEARING | PALIER |
| 4 | 1000143382 | | 1,00 ST | DICHTRING | SEAL RING | BAGUE D'ÉTANCHÉITÉ |
| 5 | 1000143296 | 0,2mm | 1,00 ST | RING | RING | ANNEAU |
| 6 | 1000143297 | 0,5mm | 1,00 ST | RING | RING | ANNEAU |
| 7 | 1000106924 | | 1,00 ST | DISTANZRING | SHIM | ANNEAU D'ÉCARTEMENT |
| 8 | 1000143298 | 0,15mm | 1,00 ST | EINSTELLSCHEIBE | DISC | DISQUE |
| 9 | 1000143299 | 0,2mm | 1,00 ST | EINSTELLSCHEIBE | DISC | DISQUE |
| 10 | 1000143300 | 0,5mm | 1,00 ST | EINSTELLSCHEIBE | DISC | DISQUE |
| 11 | 1000162221 | | 1,00 ST | TELLERRADPAAR | BEVEL GEAR PAIR | PAIRE DE COURONNE DE DIFFÉRENTIEL |
| 12 | 1000143384 | | 8,00 ST | STIFTSCHRAUBE | STUD | GOUJON |
| 13 | 1000144462 | | 8,00 ST | MUTTER | NUT | ÉCROU |
| 14 | 1000162065 | | 12,00 ST | SCHRAUBE | SCREW | VIS |
| 15 | 1000143307 | 0,15mm | 2,00 ST | EINSTELLSCHEIBE | DISC | DISQUE |
| 16 | 1000143308 | 0,2mm | 2,00 ST | EINSTELLSCHEIBE | DISC | DISQUE |
| 17 | 1000143309 | 0,5mm | 2,00 ST | EINSTELLSCHEIBE | DISC | DISQUE |
| 18 | 1000143310 | 1,0mm | 2,00 ST | EINSTELLSCHEIBE | DISC | DISQUE |
| 19 | 1000102596 | | 2,00 ST | KEGELROLLENLAGER | TAPER ROLLER BEARING | ROULEMENT À ROULEAUX CONIQUES |
| 20 | 1000162223 | | 1,00 ST | DIFFERENTIALGEHÄUSE | DIFFERENTIAL HOUSING | BOÎTE DIFFÉRENTIELLE |
| 21 | 1000102600 | | 2,00 ST | ANLAUFSCHEIBE | WASHER | DISQUE DE DÉMARRAGE |
| 22 | 1000162066 | | 2,00 ST | AUSGLEICHSWELLENRAD | DIFF.SHAFT GEAR | ROUE D'ARBRE DE COMPENSATION |
| 23 | 1000102605 | | 4,00 ST | ANLAUFSCHEIBE | WASHER | DISQUE DE DÉMARRAGE |
| 24 | 1000102603 | | 4,00 ST | KEGELRAD | PINION | ROUE CONIQUE |
| 25 | 1000102606 | | 2,00 ST | BOLZEN | PIN | AXE |
| 26 | 1000102607 | | 3,00 ST | STIFT | PIN | GOUPILLE |
| 27 | 1000102608 | | 1,00 ST | BOLZEN | PIN | AXE |
| 28 | 1000162236 | | 1,00 ST | KREUZSTÜCK | CROSS PIECE | PIÈCE EN CROIX |

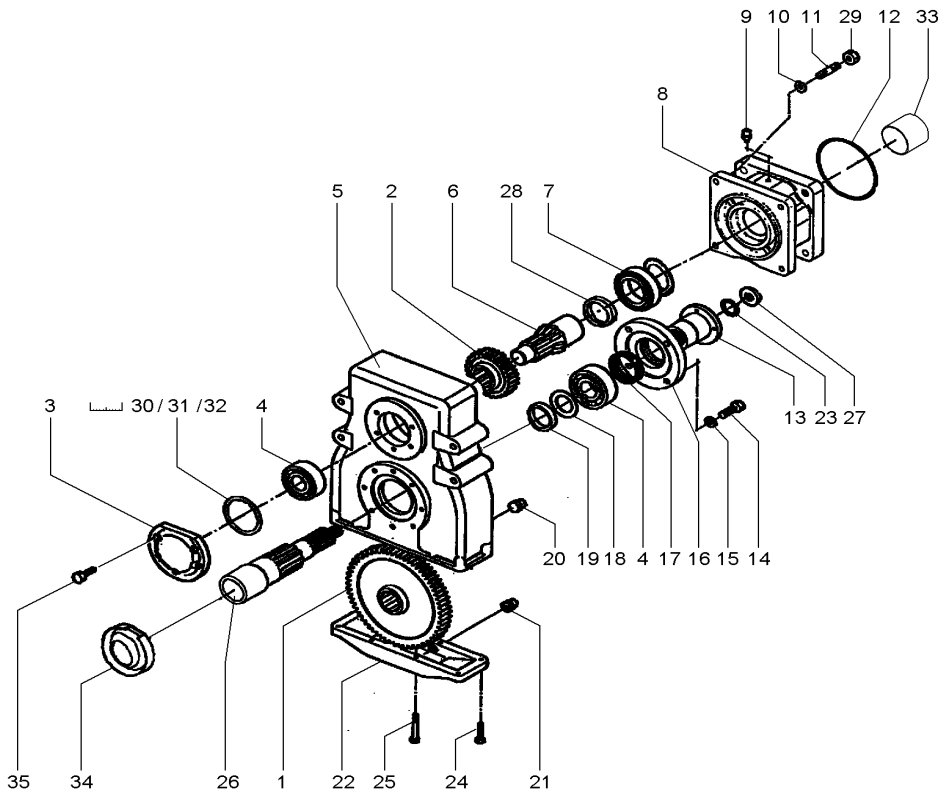


| Pos | Art.-Nr. | Anm. | Q'TY | BEZEICHNUNG | PART NAME | DESIGNATION |
|---|---|---|---|---|---|---|
| 1 | 1000148388 | | 1,00 ST | ZAHNRAD | GEAR | ROUE DENTÉE |
| 2 | 1000148387 | | 1,00 ST | ZAHNRAD | GEAR | ROUE DENTÉE |
| 3 | 1000143387 | | 1,00 ST | DECKEL | COVER | COUVERCLE |
| 4 | 1000143392 | | 1,00 ST | KUGELLAGER | BALL BEARING | ROULEMENT À BILLES |
| 5 | 1000143393 | | 1,00 ST | GEHÄUSE | HOUSING | BOÎTE |
| 6 | 1000154977 | | 1,00 ST | ANTRIEBSWELLE | DRIVE SHAFT | ARBRE MOTEUR |
| 7 | 1000143391 | | 1,00 ST | KUGELLAGER | BALL BEARING | ROULEMENT À BILLES |
| 8 | 1000154979 | | 1,00 ST | DECKEL | COVER | COUVERCLE |
| 9 | 1000105844 | | 1,00 ST | ENTLÜFTER | BREATHER | AÉRATEUR |
| 10 | 1000143394 | | 4,00 ST | FEDERRING | SPRING RING | RONDELLE À RESSORT |
| 11 | 1000143396 | | 4,00 ST | STIFTSCHRAUBE | STUD | GOUJON |
| 12 | 1000154980 | | 1,00 ST | O-RING | O-RING | ANNEAU EN O |
| 13 | 1000088748 | | 1,00 ST | FLANSCH | FLANGE | BRIDE |
| 14 | 1000143399 | | 4,00 ST | 6KT-SCHRAUBE | HEX SCREW | VIS À TÊTE HEXAGONALE |
| 15 | 1000143395 | | 4,00 ST | FEDERRING | SPRING RING | RONDELLE À RESSORT |
| 16 | 1000143389 | | 1,00 ST | DECKEL | COVER | COUVERCLE |
| 17 | 1000088706 | | 1,00 ST | DICHTRING | SEAL RING | BAGUE D'ÉTANCHÉITÉ |
| 18 | 1000143400 | | 1,00 ST | DISTANZRING | SHIM | ANNEAU D'ÉCARTEMENT |
| 19 | 1000143401 | | 1,00 ST | DISTANZRING | SHIM | ANNEAU D'ÉCARTEMENT |
| 20 | 1000143405 | | 2,00 ST | STOPFEN | PLUG | BOUCHON |
| 21 | 1000088766 | | 1,00 ST | MAGNETFILTERSTOPFEN | MAGNETFILTER PLUG | BOUCHON DE FILTRE MAGNÉTIQUE |
| 22 | 1000143390 | | 1,00 ST | DECKEL | COVER | COUVERCLE |
| 23 | 1000084961 | | 1,00 ST | O-RING | O-RING | ANNEAU EN O |
| 24 | 1000143406 | | 4,00 ST | ZYLINDERSCHRAUBE | CHEESE HEAD SCREW | VIS À TÊTE CYLINDRIQUE |
| 25 | 1000143407 | | 4,00 ST | SCHRAUBE | SCREW | VIS |
| 26 | 1000143408 | | 1,00 ST | WELLE | SHAFT | ONDE |
| 27 | 1000088765 | | 1,00 ST | MUTTER | NUT | ÉCROU |
| 28 | 1000143402 | | 1,00 ST | DISTANZRING | SHIM | ANNEAU D'ÉCARTEMENT |
| 29 | 1000106340 | | 4,00 ST | MUTTER | NUT | ÉCROU |
| 30 | 1000143409 | 0,15mm | 1,00 ST | EINSTELLSCHEIBE | DISC | DISQUE |
| 31 | 1000143410 | 0,2mm | 1,00 ST | EINSTELLSCHEIBE | DISC | DISQUE |
| 32 | 1000143411 | 0,5mm | 1,00 ST | EINSTELLSCHEIBE | DISC | DISQUE |
| 33 | 1000154982 | | 1,00 ST | BUCHSE | BUSHING | BAGUE |
| 34 | 1000143413 | | 1,00 ST | BLECH | PLATE | TÔLE |
| 35 | 1000143386 | | 5,00 ST | ZYLINDERSCHRAUBE | CHEESE HEAD SCREW | VIS À TÊTE CYLINDRIQUE |

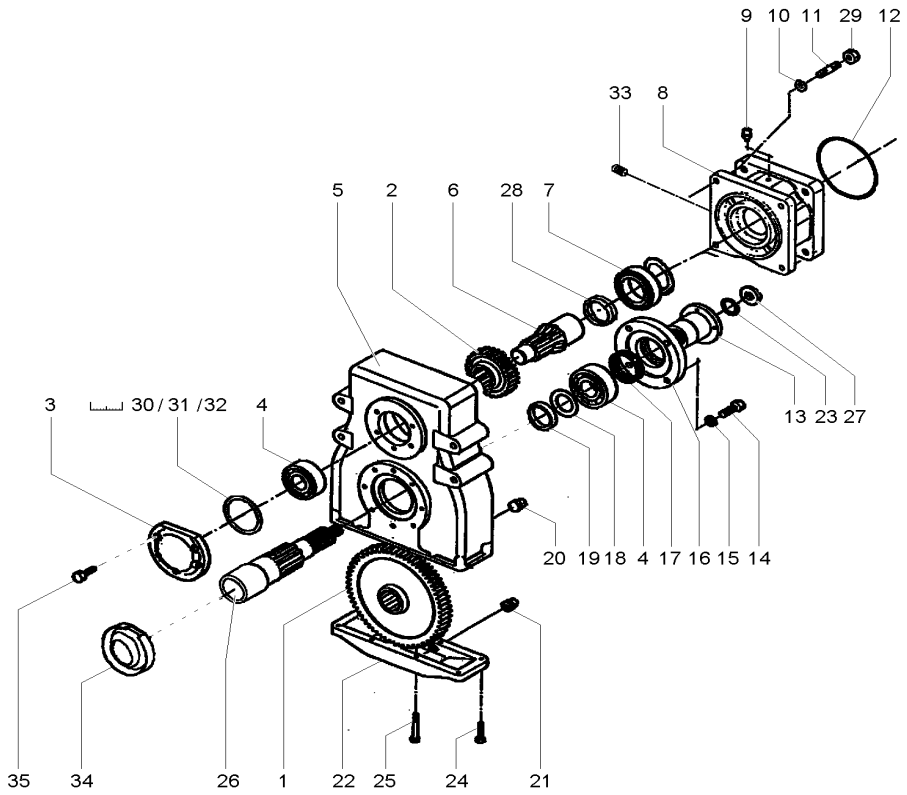


| Pos | Art.-Nr. | Anm. | Q'TY | BEZEICHNUNG | PART NAME | DESIGNATION |
|---|---|---|---|---|---|---|
| 1 | 1000162227 | | 1,00 ST | ZAHNRAD | GEAR | ROUE DENTÉE |
| 2 | 1000155437 | | 1,00 ST | ZAHNRAD | GEAR | ROUE DENTÉE |
| 3 | 1000143387 | | 1,00 ST | DECKEL | COVER | COUVERCLE |
| 4 | 1000143392 | | 1,00 ST | KUGELLAGER | BALL BEARING | ROULEMENT À BILLES |
| 5 | 1000143393 | | 1,00 ST | GEHÄUSE | HOUSING | BOÎTE |
| 6 | 1000150742 | | 1,00 ST | ANTRIEBSWELLE | DRIVE SHAFT | ARBRE MOTEUR |
| 7 | 1000143391 | | 1,00 ST | KUGELLAGER | BALL BEARING | ROULEMENT À BILLES |
| 8 | 1000150744 | | 1,00 ST | DECKEL | COVER | COUVERCLE |
| 9 | 1000105844 | | 1,00 ST | ENTLÜFTER | BREATHER | AÉRATEUR |
| 10 | 1000143394 | | 4,00 ST | FEDERRING | SPRING RING | RONDELLE À RESSORT |
| 11 | 1000143396 | | 4,00 ST | STIFTSCHRAUBE | STUD | GOUJON |
| 12 | 1000150745 | | 1,00 ST | O-RING | O-RING | ANNEAU EN O |
| 13 | 1000088748 | | 1,00 ST | FLANSCH | FLANGE | BRIDE |
| 14 | 1000143399 | | 4,00 ST | 6KT-SCHRAUBE | HEX SCREW | VIS À TÊTE HEXAGONALE |
| 15 | 1000143395 | | 4,00 ST | FEDERRING | SPRING RING | RONDELLE À RESSORT |
| 16 | 1000143389 | | 1,00 ST | DECKEL | COVER | COUVERCLE |
| 17 | 1000088706 | | 1,00 ST | DICHTRING | SEAL RING | BAGUE D'ÉTANCHÉITÉ |
| 18 | 1000143400 | | 1,00 ST | DISTANZRING | SHIM | ANNEAU D'ÉCARTEMENT |
| 19 | 1000143401 | | 1,00 ST | DISTANZRING | SHIM | ANNEAU D'ÉCARTEMENT |
| 20 | 1000143405 | | 2,00 ST | STOPFEN | PLUG | BOUCHON |
| 21 | 1000088766 | | 1,00 ST | MAGNETFILTERSTOPFEN | MAGNETFILTER PLUG | BOUCHON DE FILTRE MAGNÉTIQUE |
| 22 | 1000143390 | | 1,00 ST | DECKEL | COVER | COUVERCLE |
| 23 | 1000084961 | | 1,00 ST | O-RING | O-RING | ANNEAU EN O |
| 24 | 1000143406 | | 4,00 ST | ZYLINDERSCHRAUBE | CHEESE HEAD SCREW | VIS À TÊTE CYLINDRIQUE |
| 25 | 1000143407 | | 4,00 ST | SCHRAUBE | SCREW | VIS |
| 26 | 1000143408 | | 1,00 ST | WELLE | SHAFT | ONDE |
| 27 | 1000088765 | | 1,00 ST | MUTTER | NUT | ÉCROU |
| 28 | 1000143402 | | 1,00 ST | DISTANZRING | SHIM | ANNEAU D'ÉCARTEMENT |
| 29 | 1000106340 | | 4,00 ST | MUTTER | NUT | ÉCROU |
| 30 | 1000143409 | 0,15mm | 1,00 ST | EINSTELLSCHEIBE | DISC | DISQUE |
| 31 | 1000143410 | 0,2mm | 1,00 ST | EINSTELLSCHEIBE | DISC | DISQUE |
| 32 | 1000143411 | 0,5mm | 1,00 ST | EINSTELLSCHEIBE | DISC | DISQUE |
| 33 | 1000106914 | | 1,00 ST | VERSCHLUSSSCHRAUBE | LOCK SCREW | VIS DE FERMETURE |
| 34 | 1000143413 | | 1,00 ST | BLECH | PLATE | TÔLE |
| 35 | 1000143386 | | 5,00 ST | ZYLINDERSCHRAUBE | CHEESE HEAD SCREW | VIS À TÊTE CYLINDRIQUE |

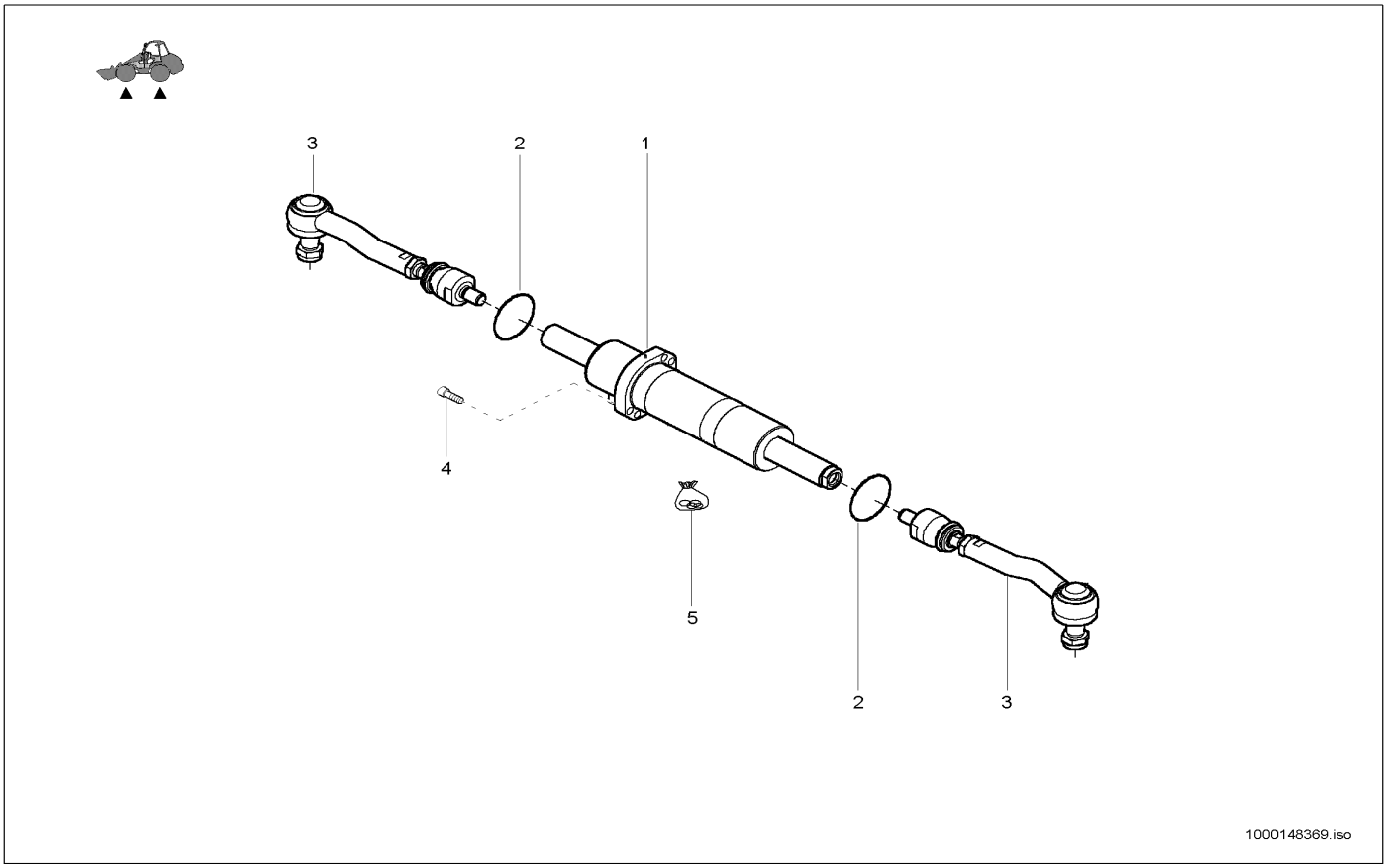


| Pos | Art.-Nr. | Anm. | Q'TY | BEZEICHNUNG | PART NAME | DESIGNATION |
|---|---|---|---|---|---|---|
| 1 | 1000148370 | | 1,00 ST | ZYLINDER | CYLINDER | CYLINDRE |
| 2 | 1000143376 | | 2,00 ST | RING | RING | ANNEAU |
| 3 | 1000148391 | | 2,00 ST | SPURSTANGE | TRACK ROD | BARRE D'COUPLEUR |
| 4 | 1000143378 | | 4,00 ST | ZYLINDERSCHRAUBE | CHEESE HEAD SCREW | VIS À TÊTE CYLINDRIQUE |
| 5 | 1000147700 | | 1,00 ST | DICHTSATZ | SEAL KIT | POCHETTE DE JOINTS |

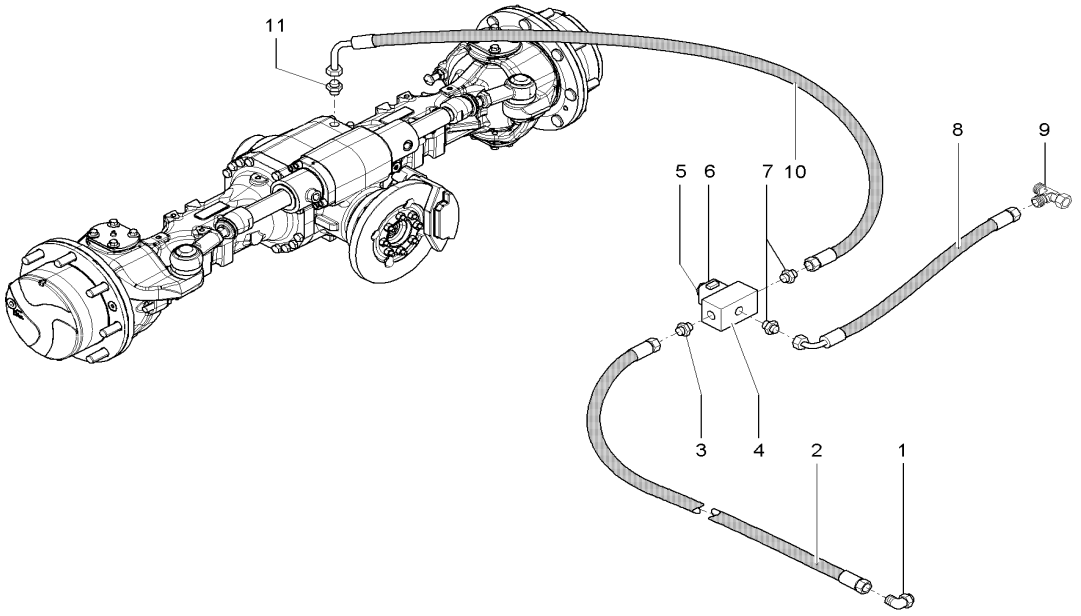


1000161639.iso

| Pos | Art.-Nr. | Anm. | Q'TY | BEZEICHNUNG | PART NAME | DESIGNATION |
|---|---|---|---|---|---|---|
| 1 | 1000098831 | | 1,00 ST | VERSCHRAUBUNG | SCREW JOINT | RACCORD UNION |
| 2 | 1000156704 | | 1,00 ST | HYDRAULIKSCHLAUCH | HP HOSE | TUYAU FLEXIBLE HYDRAULIQUE |
| 3 | 1000015490 | | 1,00 ST | VERSCHRAUBUNG | SCREW JOINT | RACCORD UNION |
| 4 | 1000103961 | | 1,00 ST | MAGNETVENTIL | SOLENOID VALVE | ÉLECTROVALVE |
| 5 | 1000111131 | | 1,00 ST | MAGNETSPULE | MAGNET SPOOL | BOBINE D'ÉLECTROAIMANT |
| 6 | 1000103962 | | 1,00 ST | VENTILEINSATZ | VALVE | SOUPAPE |
| 7 | 1000015490 | | 2,00 ST | VERSCHRAUBUNG | SCREW JOINT | RACCORD UNION |
| 8 | 1000156702 | | 1,00 ST | HYDRAULIKSCHLAUCH | HP HOSE | TUYAU FLEXIBLE HYDRAULIQUE |
| 9 | 1000015516 | | 1,00 ST | VERSCHRAUBUNG | SCREW JOINT | RACCORD UNION |
| 10 | 1000149150 | | 1,00 ST | HYDRAULIKSCHLAUCH | HP HOSE | TUYAU FLEXIBLE HYDRAULIQUE |
| 11 | 1000085114 | | 1,00 ST | VERSCHRAUBUNG | SCREW JOINT | RACCORD UNION |

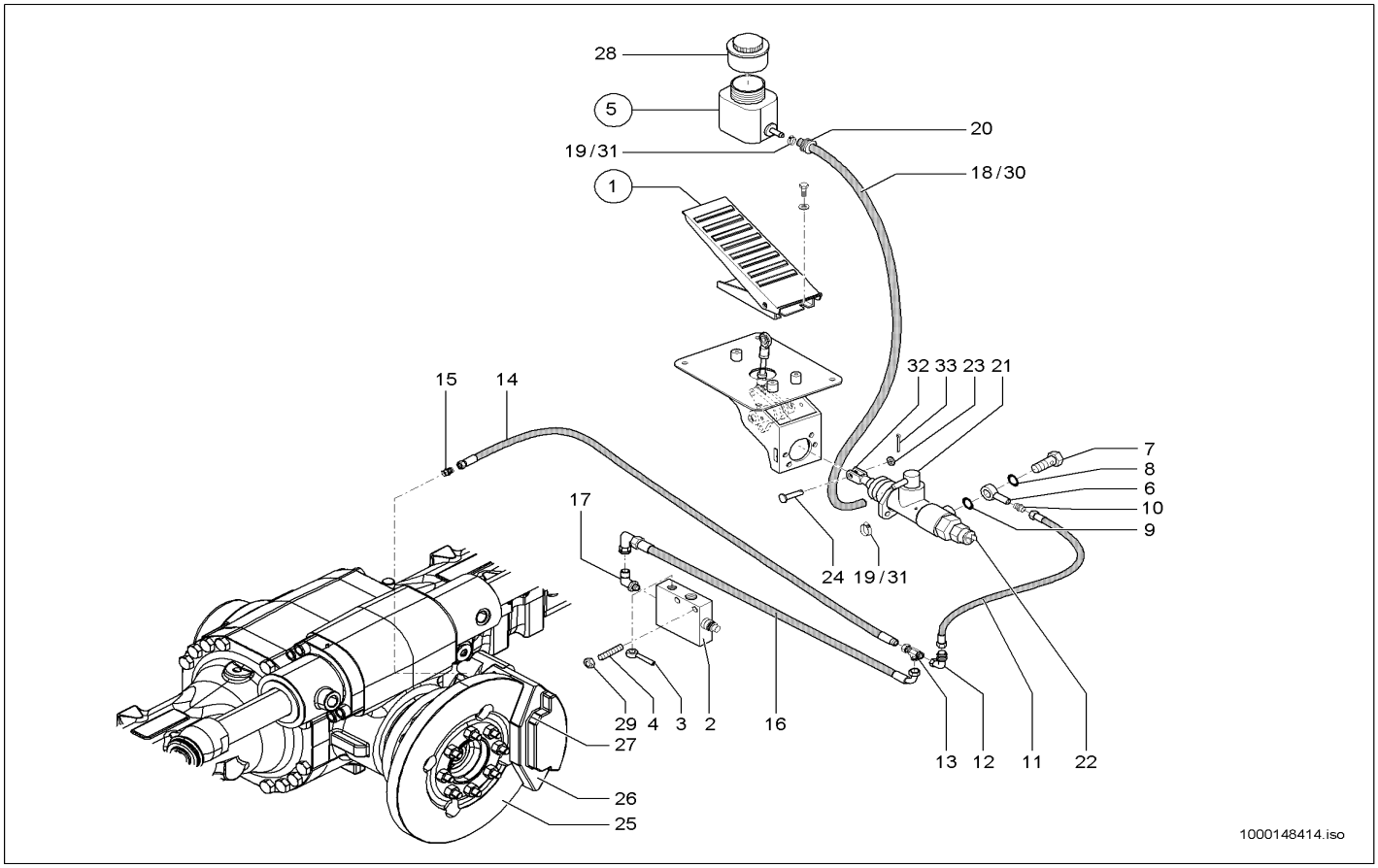


| Pos | Art.-Nr. | Anm. | Q'TY | BEZEICHNUNG | PART NAME | DESIGNATION |
|---|---|---|---|---|---|---|
| 1 | 1000133216 | | 1,00 ST | BREMSPEDAL | BRAKE PEDAL | PÉDALE DE FREIN |
| 2 | 1000052099 | | 1,00 ST | INCHVENTIL | INCHING VALVE | SOUPAPE D'INCH |
| 3 | 1000142883 | | 1,00 ST | ENTLÜFTUNGSLEITUNG | BREATHER LINE | LIGNE D'AIR |
| 4 | 1000048881 | | 1,00 ST | STIFTSCHRAUBE | STUD | GOUJON |
| 5 | 1000051614 | | 1,00 ST | AUSGLEICHSBEHÄLTER | REGULATION CONTAINER | RÉSERVOIR ÉGALISEUR |
| 6 | 1000019876 | | 1,00 ST | RINGSTUTZEN | EYE PIECE | TUBULURE ANNULAIRE |
| 7 | 1000019878 | | 1,00 ST | HOHLSCHRAUBE | BANJO BOLT | VIS CREUSE |
| 8 | 1000085675 | | 1,00 ST | DICHTRING | SEAL RING | BAGUE D'ÉTANCHÉITÉ |
| 9 | 1000050105 | | 1,00 ST | DICHTRING | SEAL RING | BAGUE D'ÉTANCHÉITÉ |
| 10 | 1000015501 | | 1,00 ST | VERSCHRAUBUNG | SCREW JOINT | RACCORD UNION |
| 11 | 1000139265 | | 1,00 ST | HYDRAULIKSCHLAUCH | HP HOSE | TUYAU FLEXIBLE HYDRAULIQUE |
| 12 | 1000101008 | | 1,00 ST | WSV 6 L | WSV 6 L | WSV 6 L |
| 13 | 1000085136 | | 1,00 ST | VERSCHRAUBUNG | SCREW JOINT | RACCORD UNION |
| 14 | 1000144661 | | 1,00 ST | HYDRAULIKSCHLAUCH | HP HOSE | TUYAU FLEXIBLE HYDRAULIQUE |
| 15 | 1000144490 | | 1,00 ST | VERSCHRAUBUNG | SCREW JOINT | RACCORD UNION |
| 16 | 1000144661 | | 1,00 ST | HYDRAULIKSCHLAUCH | HP HOSE | TUYAU FLEXIBLE HYDRAULIQUE |
| 17 | 1000103237 | | 1,00 ST | VERSCHRAUBUNG | SCREW JOINT | RACCORD UNION |
| 18 | 1000152492 | A:347010144 | 0,98 M | SCHLAUCH | HOSE | TUYAU FLEXIBLE |
| 19 | 1000103392 | A:347010144 | 2,00 ST | SCHLAUCHSCHELLE | HOSE CLAMP | COLLIER DE TUYAU FLEXIBLE |
| 20 | 1000033041 | | 1,00 ST | DURCHFÜHRUNGSRING | JUNCTION | ANNEAU D'APPLICATION |
| 21 | 1000135969 | | 1,00 ST | HAUPTBREMSZYLINDER | MASTERBRAKE CYLINDER | CYLINDRE RÉCEPTEUR PRINCIPAL |
| 22 | 1000100975 | | 1,00 ST | DRUCKSCHALTER | PRESSURE SWITCH | INTERRUPTEUR DE PRESSION |
| 23 | 1000110063 | | 1,00 ST | GABELKOPF | FORK HEAD | TÊTE DE ATTACHE RAPIDE |
| 24 | 1000110064 | | 1,00 ST | BOLZEN | PIN | AXE |
| 25 | 1000143313 | | 1,00 ST | BREMSSCHEIBE | BRAKE DISC | DISQUE DE FREIN |
| 26 | 1000143314 | | 1,00 ST | BREMSSATTEL | BRAKE CALLIPER | ÉTRIER DE FREINAGE |
| 27 | 1000144489 | | 1,00 ST | BREMSBELAG | BRAKE LINING | PLAQUETTE DE FREIN |
| 28 | 1000143654 | | 1,00 ST | VERSCHLUSSDECKEL | LOCK COVER | COUVERCLE DE MÉCANISME DE FERMETURE |
| 29 | 1000013022 | | 1,00 ST | 6KT-MUTTER | HEXAGON NUT | ÉCROU HEXAGONAL |
| 30 | 1000161484 | E:347010145 | 0,98 M | SCHLAUCH | HOSE | TUYAU FLEXIBLE |
| 31 | 1000032138 | E:347010145 | 2,00 ST | SCHELLE | CLAMP | BRIDE |
| 32 | 1000015431 | | 1,00 ST | SCHEIBE | WASHER | RONDELLE |
| 33 | 1000110065 | | 1,00 ST | SPLINT | COTTERPIN | GOUPILLE |

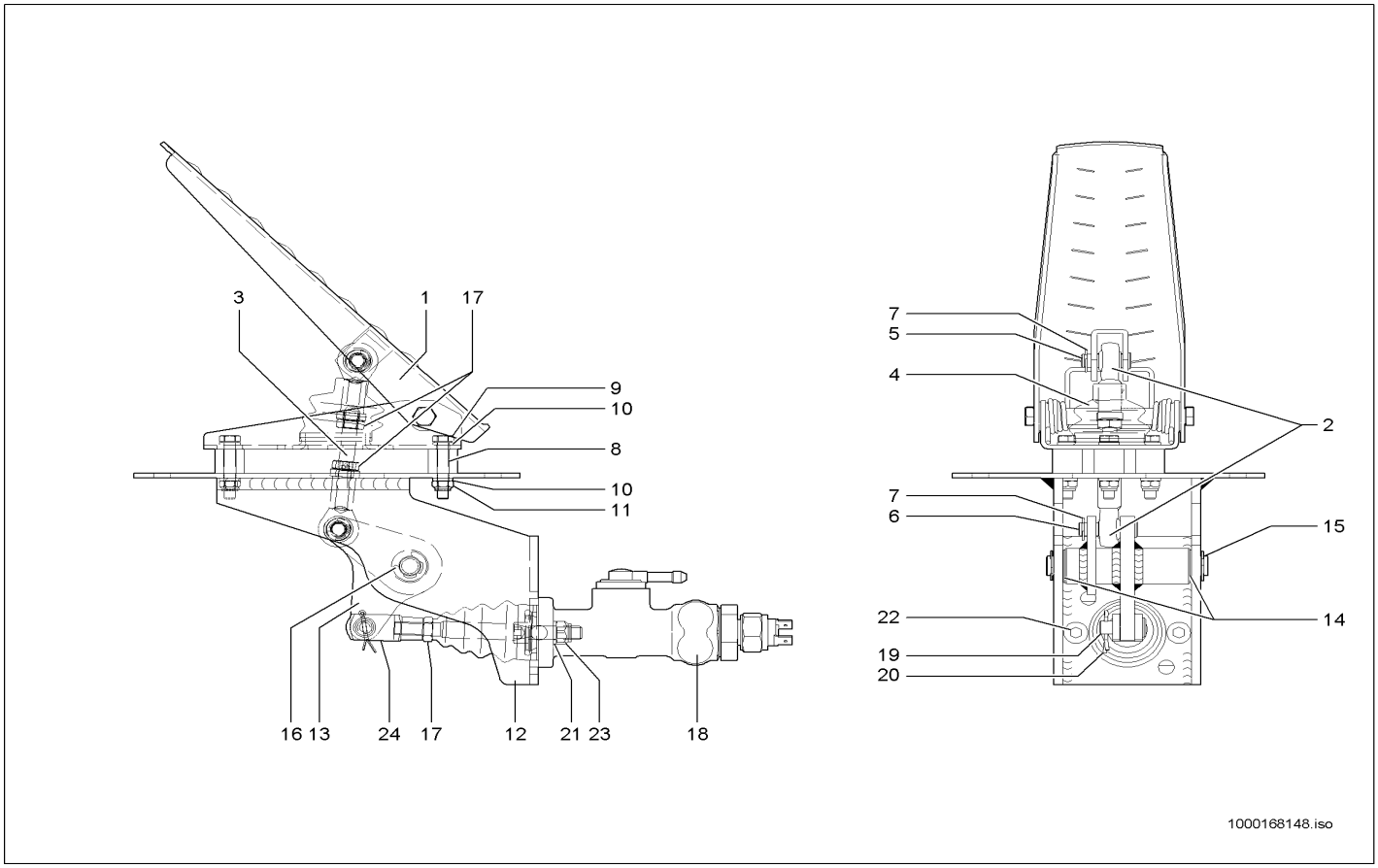


| Pos | Art.-Nr. | Anm. | Q'TY | BEZEICHNUNG | PART NAME | DESIGNATION |
|---|---|---|---|---|---|---|
| 1 | 1000150770 | | 1,00 ST | BREMSPEDAL | BRAKE PEDAL | PÉDALE DE FREIN |
| 2 | 1000110060 | | 2,00 ST | KUGELGELENK | BALLJOINT | JOINT SPHÉRIQUE |
| 3 | 1000168115 | | 1,00 ST | GEWINDESTANGE | THREAD ROD | TIGE FILETÉE |
| 4 | 1000110061 | | 1,00 ST | FALTENBALG | BELLOW | SOUFFLET |
| 5 | 1000146903 | | 1,00 ST | BOLZEN | PIN | AXE |
| 6 | 1000146901 | | 1,00 ST | BOLZEN | PIN | AXE |
| 7 | 1000168113 | | 2,00 ST | SICHERUNGSRING | LOCK RING | BAGUE DE SÛRETÉ |
| 8 | 1000150781 | | 3,00 ST | RING | RING | ANNEAU |
| 9 | 1000150782 | | 3,00 ST | 6KT-SCHRAUBE | HEX SCREW | VIS À TÊTE HEXAGONALE |
| 10 | 1000150783 | | 6,00 ST | SCHEIBE | WASHER | RONDELLE |
| 11 | 1000150784 | | 3,00 ST | 6KT-MUTTER | HEXAGON NUT | ÉCROU HEXAGONAL |
| 12 | 1000168070 | | 1,00 ST | LAGERUNG | MOUNTING | STOCKAGE |
| 13 | 1000168116 | | 1,00 ST | HEBEL | LEVER | LEVIER |
| 14 | 1000150677 | | 2,00 ST | BUCHSE | BUSHING | BAGUE |
| 15 | 1000150678 | | 1,00 ST | BOLZEN | PIN | AXE |
| 16 | 1000150680 | | 2,00 ST | SICHERUNGSRING | LOCK RING | BAGUE DE SÛRETÉ |
| 17 | 1000085586 | | 3,00 ST | 6KT-MUTTER | HEXAGON NUT | ÉCROU HEXAGONAL |
| 18 | 1000135969 | | 1,00 ST | HAUPTBREMSZYLINDER | MASTERBRAKE CYLINDER | CYLINDRE RÉCEPTEUR PRINCIPAL |
| 19 | 1000110064 | | 1,00 ST | BOLZEN | PIN | AXE |
| 20 | 1000110065 | | 1,00 ST | SPLINT | COTTERPIN | GOUPILLE |
| 21 | 1000015431 | | 2,00 ST | SCHEIBE | WASHER | RONDELLE |
| 22 | 1000015343 | | 2,00 ST | 6KT-SCHRAUBE | HEX SCREW | VIS À TÊTE HEXAGONALE |
| 23 | 1000013022 | | 2,00 ST | 6KT-MUTTER | HEXAGON NUT | ÉCROU HEXAGONAL |
| 24 | 1000110063 | | 1,00 ST | GABELKOPF | FORK HEAD | TÊTE DE ATTACHE RAPIDE |

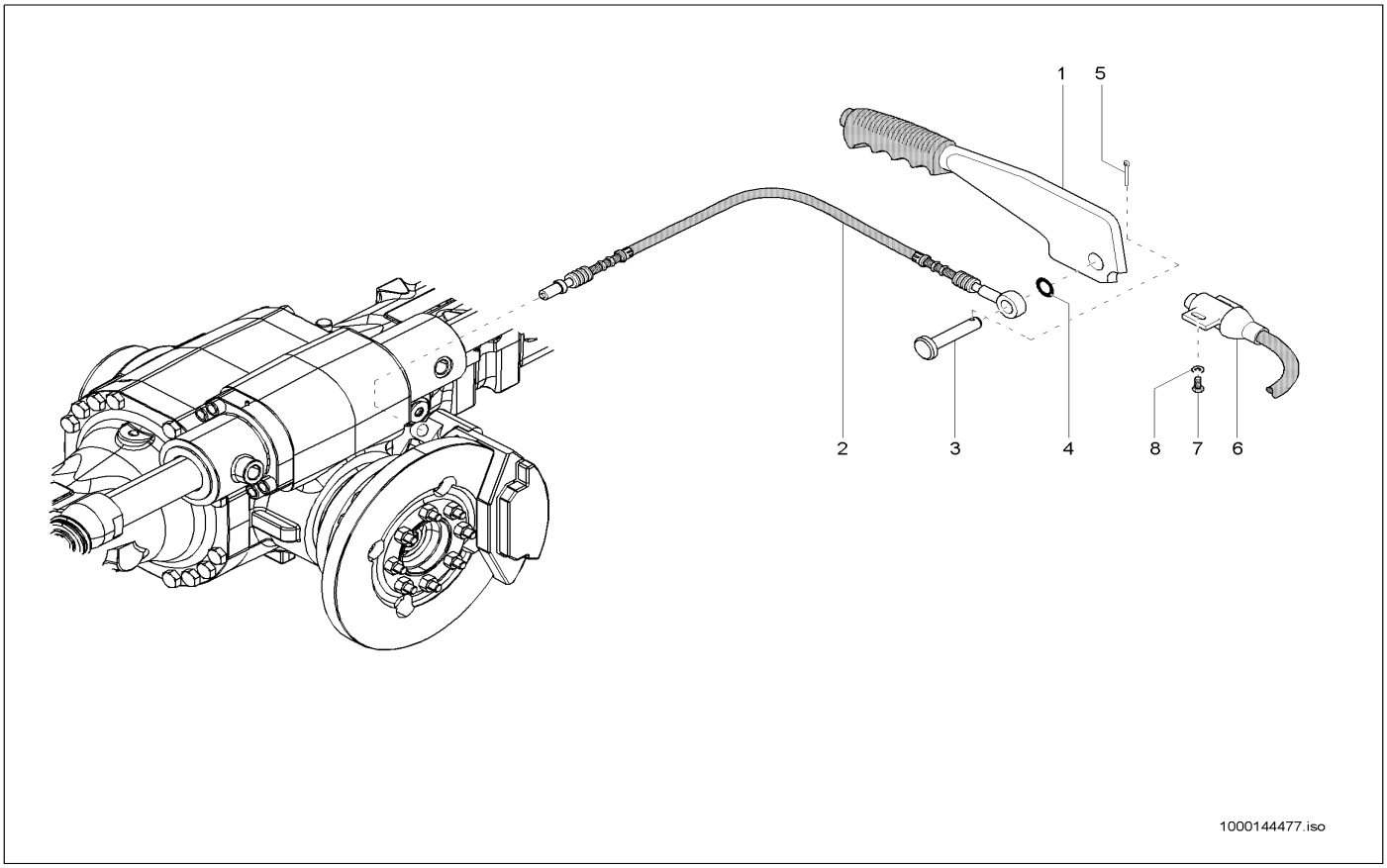


| Pos | Art.-Nr. | Anm. | Q'TY | BEZEICHNUNG | PART NAME | DESIGNATION |
|---|---|---|---|---|---|---|
| 1 | 1000088091 | | 1,00 ST | HANDBREMSHEBEL | PARKING BRAKE LEVER | LEVIER DE FREIN DE STATIONNEMENT |
| 2 | 1000138706 | | 1,00 ST | SEILZUG | CABLE PULL | APPEL D'UN CORDAGE |
| 3 | 1000096028 | | 1,00 ST | BOLZEN | PIN | AXE |
| 4 | 1000013027 | | 1,00 ST | SCHEIBE | WASHER | RONDELLE |
| 5 | 1000085657 | | 1,00 ST | SPLINT | COTTERPIN | GOUPILLE |
| 6 | 1000051973 | | 1,00 ST | HANDBREMSSCHALTER | SWITCH | INTERRUPTEUR |
| 7 | 1000106693 | | 2,00 ST | ZYLINDERSCHRAUBE | CHEESE HEAD SCREW | VIS A TETE CYLINDRIQUE |
| 8 | 1000092288 | | 2,00 ST | SCHEIBE | WASHER | RONDELLE |

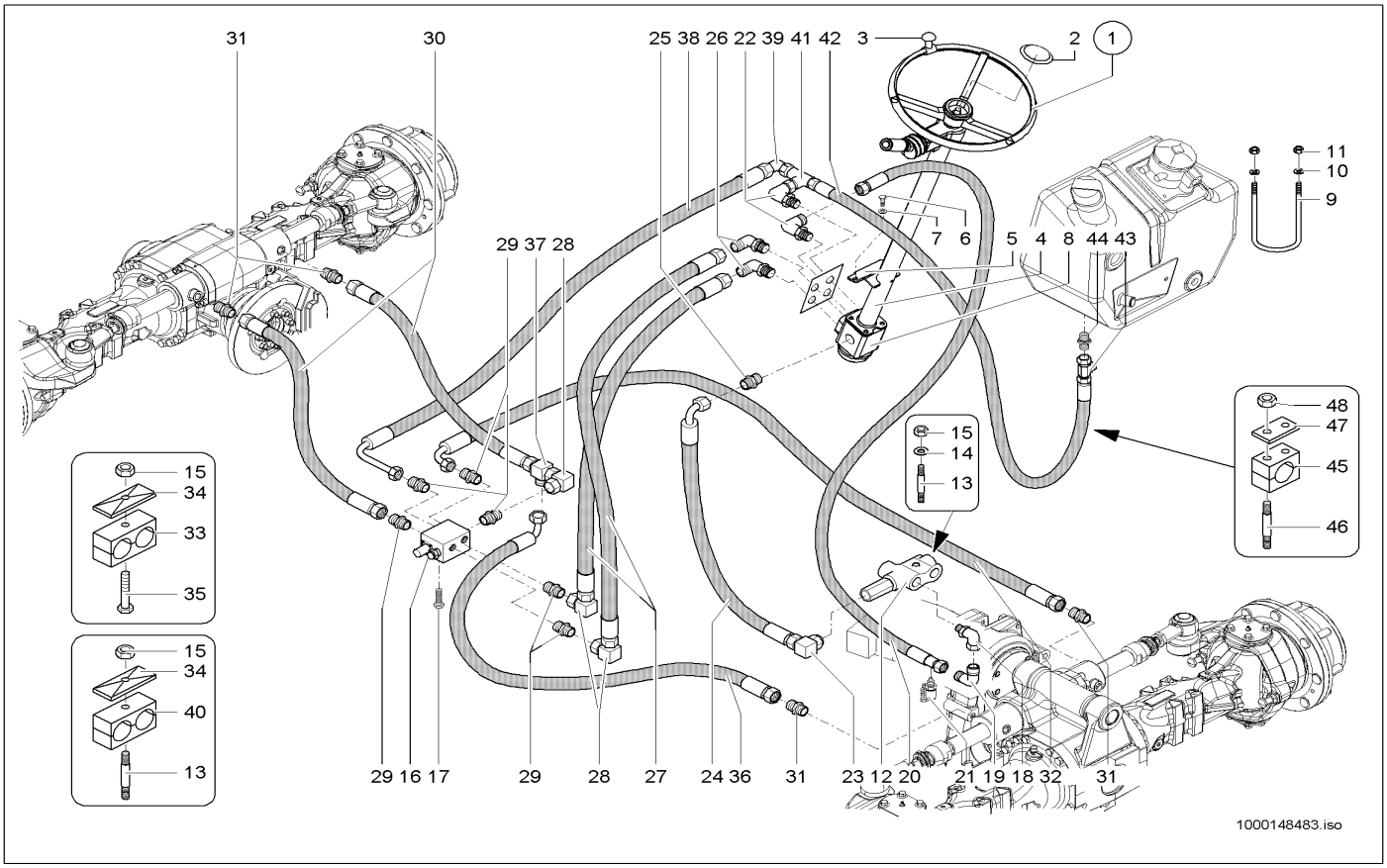


| Pos | Art.-Nr. | Anm. | Q'TY | BEZEICHNUNG | PART NAME | DESIGNATION |
|---|---|---|---|---|---|---|
| 1 | 1000102312 | | 1,00 ST | LENKRAD | STEERING WHEEL | VOLANT DE DIRECTION |
| 2 | 1000113679 | | 1,00 ST | KAPPE | CAP | BOUCHON |
| 3 | 1000113700 | | 1,00 ST | GRIFF | HANDLE | MANETTE |
| 4 | 1000133908 | | 1,00 ST | LENKSÄULE | STEERING COLUMN | ARBRE DU VOLANT |
| 5 | 1000134366 | | 1,00 ST | KLEMMSTÜCK | CLAMP PIECE | MORCEAU POUR BLOCAGE |
| 6 | 1000015345 | | 6,00 ST | 6KT-SCHRAUBE | HEX SCREW | VIS À TÊTE HEXAGONALE |
| 7 | 1000092303 | | 6,00 ST | SCHEIBE 10,5 ST A2C | WASHER 10,5 ST A2C | RONDELLE 10,5 ST A2C |
| 8 | 1000104393 | | 1,00 ST | LENKUNG HYDROSTATISCH | HYDROSTATIC STEERING | DIRECTION HYDROSTATIQUE |
| 9 | 1000133975 | | 1,00 ST | BÜGELSCHRAUBE | SCREW | VIS |
| 10 | 1000013027 | | 2,00 ST | SCHEIBE | WASHER | RONDELLE |
| 11 | 1000013021 | | 2,00 ST | 6KT-MUTTER | HEXAGON NUT | ÉCROU HEXAGONAL |
| 12 | 1000028006 | | 1,00 ST | PRIORITÄTSVENTIL | PRIORITY VALVE | SOUPAPE PRIORITAIRE |
| 13 | 1000048894 | | 2,00 ST | STIFTSCHRAUBE | STUD | GOUJON |
| 14 | 1000015431 | | 6,00 ST | SCHEIBE | WASHER | RONDELLE |
| 15 | 1000013022 | | 7,00 ST | 6KT-MUTTER | HEXAGON NUT | ÉCROU HEXAGONAL |
| 16 | 1000027931 | | 1,00 ST | VENTIL | VALVE | SOUPAPE |
| 17 | 1000013008 | | 2,00 ST | 6KT-SCHRAUBE | HEX SCREW | VIS À TÊTE HEXAGONALE |
| 18 | 1000028722 | | 1,00 ST | VERSCHRAUBUNG | SCREW JOINT | RACCORD UNION |
| 19 | 1000000573 | | 1,00 ST | VERSCHRAUBUNG | SCREW JOINT | RACCORD UNION |
| 20 | 1000144620 | | 1,00 ST | HYDRAULIKSCHLAUCH | HP HOSE | TUYAU FLEXIBLE HYDRAULIQUE |
| 21 | 1000028166 | | 1,00 ST | MINIMESSANSCHLUSS | MINIMESS POINT | CONNEXION DE MINI MESURAGE |
| 22 | 1000109207 | | 2,00 ST | VERSCHRAUBUNG | SCREW JOINT | RACCORD UNION |
| 23 | 1000028710 | | 1,00 ST | VERSCHRAUBUNG | SCREW JOINT | RACCORD UNION |
| 24 | 1000146813 | | 1,00 ST | HYDRAULIKSCHLAUCH | HP HOSE | TUYAU FLEXIBLE HYDRAULIQUE |
| 25 | 1000146810 | | 1,00 ST | BLENDE | PROTECTION | BANDEAU |
| 26 | 1000098831 | | 2,00 ST | VERSCHRAUBUNG | SCREW JOINT | RACCORD UNION |
| 27 | 1000144621 | | 2,00 ST | HYDRAULIKSCHLAUCH | HP HOSE | TUYAU FLEXIBLE HYDRAULIQUE |
| 28 | 1000015510 | | 3,00 ST | VERSCHRAUBUNG | SCREW JOINT | RACCORD UNION |
| 29 | 1000028278 | | 6,00 ST | VERSCHRAUBUNG | SCREW JOINT | RACCORD UNION |
| 30 | 1000144622 | | 2,00 ST | HYDRAULIKSCHLAUCH | HP HOSE | TUYAU FLEXIBLE HYDRAULIQUE |
| 31 | 1000085112 | | 4,00 ST | VERSCHRAUBUNG | SCREW JOINT | RACCORD UNION |
| 32 | 1000144624 | | 1,00 ST | HYDRAULIKSCHLAUCH | HP HOSE | TUYAU FLEXIBLE HYDRAULIQUE |
| 33 | 1000052646 | 12,0/15,0 PP | 5,00 ST | SCHELLE | CLAMP | BRIDE |
| 34 | 1000031230 | | 8,00 ST | DECKPLATTE | COVER PLATE | PLAQUE DE RECOUVREMENT |
| 35 | 1000085317 | | 4,00 ST | 6KT-SCHRAUBE | HEX SCREW | VIS À TÊTE HEXAGONALE |
| 36 | 1000102263 | | 1,00 ST | HYDRAULIKSCHLAUCH | HP HOSE | TUYAU FLEXIBLE HYDRAULIQUE |
| 37 | 1000085089 | | 1,00 ST | VERSCHRAUBUNG | SCREW JOINT | RACCORD UNION |
| 38 | 1000144907 | | 1,00 ST | HYDRAULIKSCHLAUCH | HP HOSE | TUYAU FLEXIBLE HYDRAULIQUE |
| 39 | 1000000573 | | 1,00 ST | VERSCHRAUBUNG | SCREW JOINT | RACCORD UNION |
| 40 | 1000031999 | 15,0/15,0 PP | 1,00 ST | SCHELLE | CLAMP | BRIDE |
| 41 | 1000015519 | | 1,00 ST | VERSCHRAUBUNG | SCREW JOINT | RACCORD UNION |
| 42 | 1000144625 | | 1,00 ST | HYDRAULIKSCHLAUCH | HP HOSE | TUYAU FLEXIBLE HYDRAULIQUE |
| 43 | 1000015516 | | 1,00 ST | VERSCHRAUBUNG | SCREW JOINT | RACCORD UNION |
| 44 | 1000028596 | | 1,00 ST | VERSCHRAUBUNG | SCREW JOINT | RACCORD UNION |
| 45 | 1000031502 | 18,0 PP | 2,00 ST | SCHELLE | CLAMP | BRIDE |
| 46 | 1000048885 | | 4,00 ST | STIFTSCHRAUBE | STUD | GOUJON |

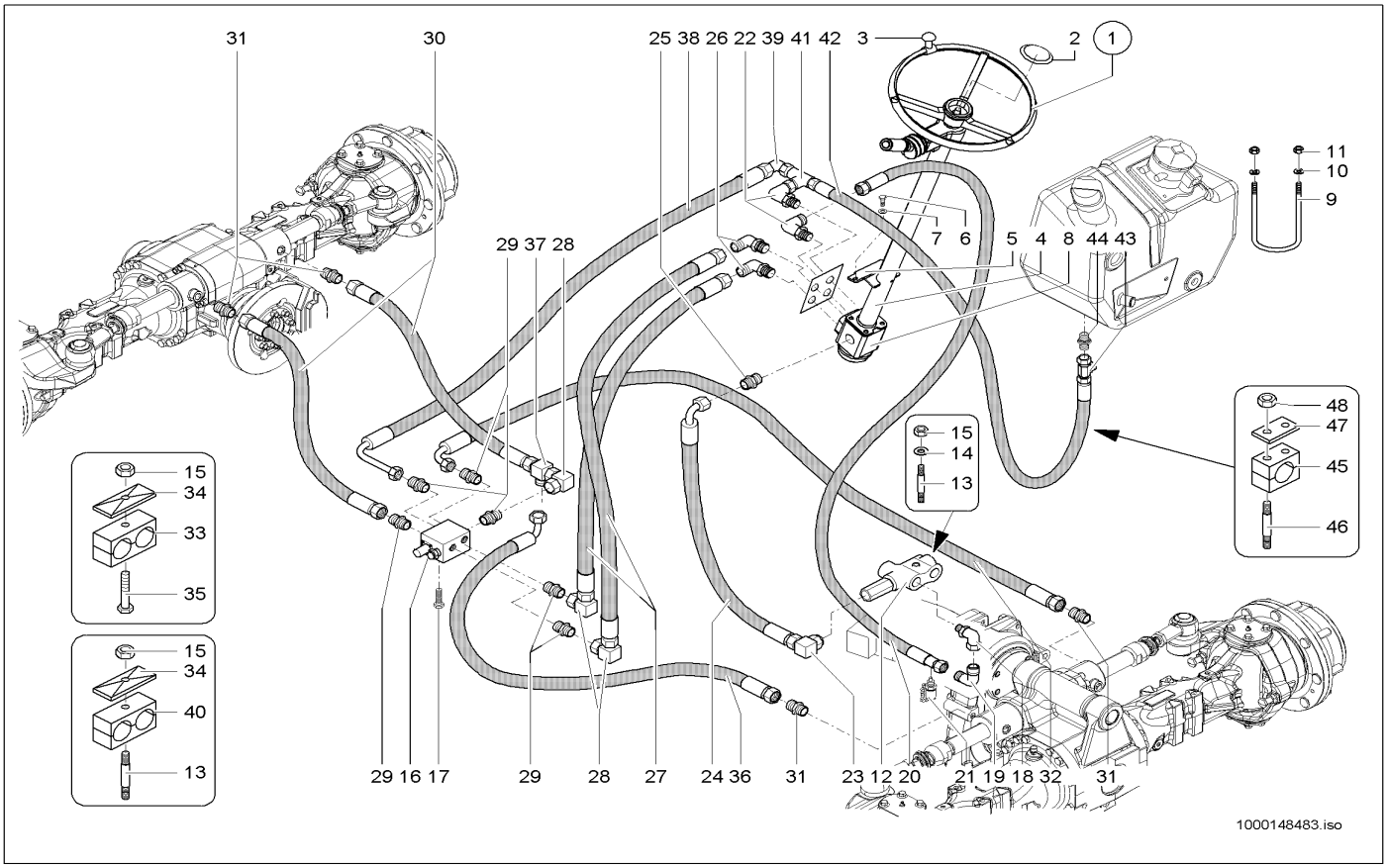


| Pos | Art.-Nr. | Anm. | Q'TY | BEZEICHNUNG | PART NAME | DESIGNATION |
|---|---|---|---|---|---|---|
| 47 | 1000031260 | | 2,00 ST | DECKPLATTE | COVER PLATE | PLAQUE DE RECOUVREMENT |
| 48 | 1000085588 | | 4,00 ST | 6KT-MUTTER | HEXAGON NUT | ÉCROU HEXAGONAL |

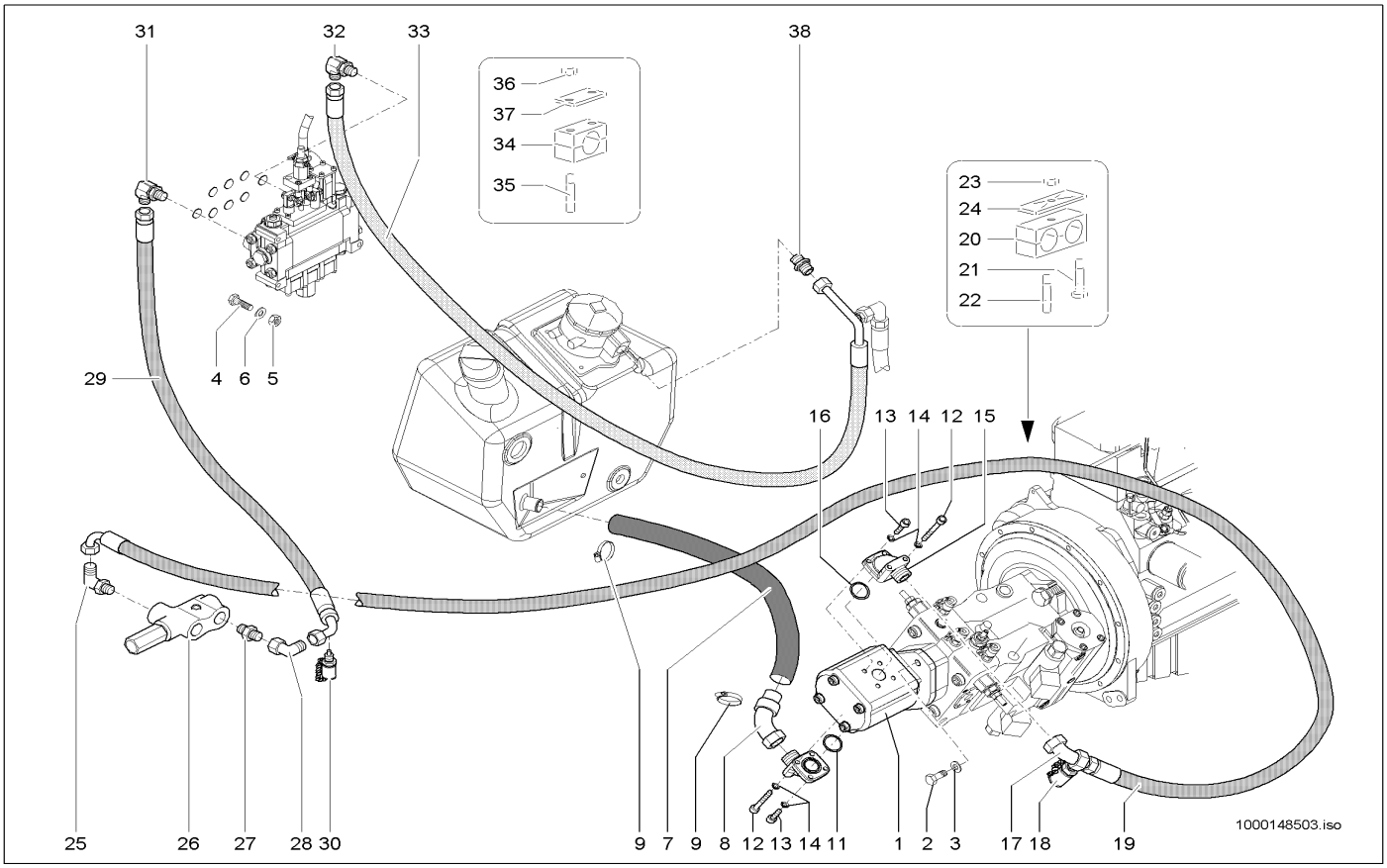


| Pos | Art.-Nr. | Anm. | Q'TY | BEZEICHNUNG | PART NAME | DESIGNATION |
|---|---|---|---|---|---|---|
| 1 | 1000000535 | | 1,00 ST | HYDRAULIKPUMPE | HYDRAULIC PUMP | POMPE HYDRAULIQUE |
| 2 | 1000047789 | | 2,00 ST | 6KT-SCHRAUBE | HEX SCREW | VIS À TÊTE HEXAGONALE |
| 3 | 1000049219 | | 2,00 ST | SCHEIBE | WASHER | RONDELLE |
| 4 | 1000015402 | | 3,00 ST | 6KT-SCHRAUBE | HEX SCREW | VIS À TÊTE HEXAGONALE |
| 5 | 1000013022 | | 3,00 ST | 6KT-MUTTER | HEXAGON NUT | ÉCROU HEXAGONAL |
| 6 | 1000095341 | | 3,00 ST | SCHEIBE | WASHER | RONDELLE |
| 7 | 1000136027 | | 1,00 ST | FORMSCHLAUCH | PRESHAPED TUBE | TUYAU FLEXIBLE DE FORME |
| 8 | 1000144563 | | 1,00 ST | SCHLAUCHARMATUR | HOSE FITTING | INSTRUMENT DE TUYAU FLEXIBLE |
| 9 | 1000032146 | | 2,00 ST | SCHELLE | CLAMP | BRIDE |
| 10 | 1000085087 | | 1,00 ST | VERSCHRAUBUNG | SCREW JOINT | RACCORD UNION |
| 11 | 1000000877 | | 1,00 ST | O-RING | O-RING | ANNEAU EN O |
| 12 | 1000048280 | | 4,00 ST | ZYLINDERSCHRAUBE | CHEESE HEAD SCREW | VIS A TETE CYLINDRIQUE |
| 13 | 1000019450 | | 4,00 ST | ZYLINDERSCHRAUBE | CHEESE HEAD SCREW | VIS A TETE CYLINDRIQUE |
| 14 | 1000019452 | | 8,00 ST | FEDERRING | SPRING RING | RONDELLE À RESSORT |
| 15 | 1000019449 | | 1,00 ST | VERSCHRAUBUNG | SCREW JOINT | RACCORD UNION |
| 16 | 1000090263 | | 1,00 ST | O-RING | O-RING | ANNEAU EN O |
| 17 | 1000136036 | | 1,00 ST | ANSCHLUSSSTÜCK | CONNECTION PIECE | PIÈCE DE CONNEXION |
| 18 | 1000028166 | | 1,00 ST | MINIMESSANSCHLUSS | MINIMESS POINT | CONNEXION DE MINI MESURAGE |
| 19 | 1000144679 | | 1,00 ST | HYDRAULIKSCHLAUCH | HP HOSE | TUYAU FLEXIBLE HYDRAULIQUE |
| 20 | 1000031271 | | 3,00 ST | SCHELLE | CLAMP | BRIDE |
| 21 | 1000048894 | | 2,00 ST | STIFTSCHRAUBE | STUD | GOUJON |
| 22 | 1000085317 | | 1,00 ST | 6KT-SCHRAUBE | HEX SCREW | VIS À TÊTE HEXAGONALE |
| 23 | 1000013022 | | 3,00 ST | 6KT-MUTTER | HEXAGON NUT | ÉCROU HEXAGONAL |
| 24 | 1000031245 | | 3,00 ST | DECKPLATTE | COVER PLATE | PLAQUE DE RECOUVREMENT |
| 25 | 1000028464 | | 1,00 ST | VERSCHRAUBUNG | SCREW JOINT | RACCORD UNION |
| 26 | 1000028006 | | 1,00 ST | PRIORITÄTSVENTIL | PRIORITY VALVE | SOUPAPE PRIORITAIRE |
| 27 | 1000015559 | | 1,00 ST | VERSCHRAUBUNG | SCREW JOINT | RACCORD UNION |
| 28 | 1000015513 | | 1,00 ST | VERSCHRAUBUNG | SCREW JOINT | RACCORD UNION |
| 29 | 1000144678 | | 1,00 ST | HYDRAULIKSCHLAUCH | HP HOSE | TUYAU FLEXIBLE HYDRAULIQUE |
| 30 | 1000028166 | | 1,00 ST | MINIMESSANSCHLUSS | MINIMESS POINT | CONNEXION DE MINI MESURAGE |
| 31 | 1000028464 | | 1,00 ST | VERSCHRAUBUNG | SCREW JOINT | RACCORD UNION |
| 32 | 1000052154 | | 1,00 ST | VERSCHRAUBUNG | SCREW JOINT | RACCORD UNION |
| 33 | 1000144354 | | 1,00 ST | HYDRAULIKSCHLAUCH | HP HOSE | TUYAU FLEXIBLE HYDRAULIQUE |
| 34 | 1000032250 | | 3,00 ST | SCHELLE | CLAMP | BRIDE |
| 35 | 1000048880 | | 6,00 ST | STIFTSCHRAUBE | STUD | GOUJON |
| 36 | 1000085588 | | 6,00 ST | 6KT-MUTTER | HEXAGON NUT | ÉCROU HEXAGONAL |
| 37 | 1000099794 | | 2,00 ST | DECKPLATTE | COVER PLATE | PLAQUE DE RECOUVREMENT |
| 38 | 1000085107 | | 1,00 ST | VERSCHRAUBUNG | SCREW JOINT | RACCORD UNION |

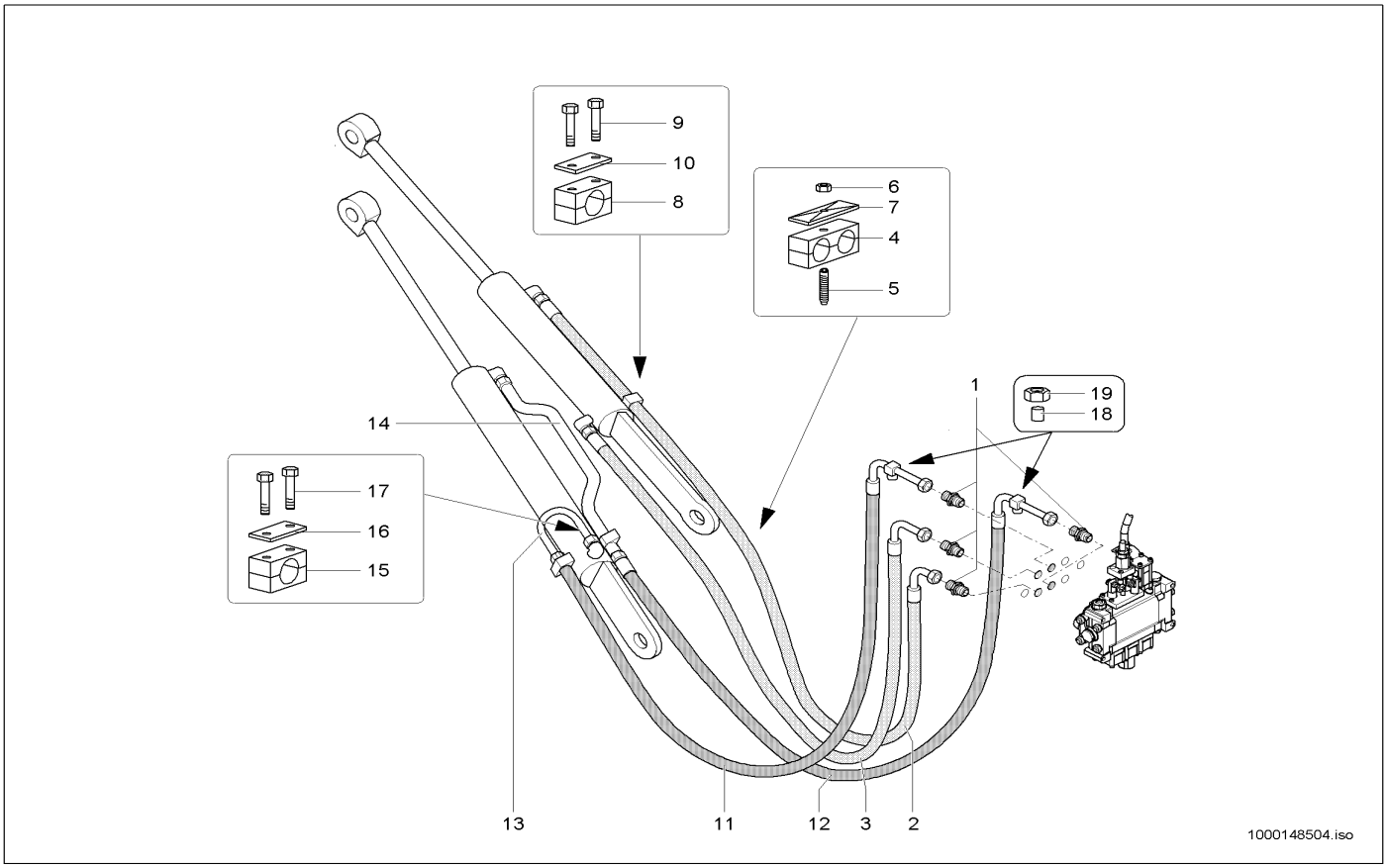


| Pos | Art.-Nr. | Anm. | Q'TY | BEZEICHNUNG | PART NAME | DESIGNATION |
|---|---|---|---|---|---|---|
| 1 | 1000015494 | | 4,00 ST | VERSCHRAUBUNG | SCREW JOINT | RACCORD UNION |
| 2 | 1000145848 | | 1,00 ST | HYDRAULIKSCHLAUCH | HP HOSE | TUYAU FLEXIBLE HYDRAULIQUE |
| 3 | 1000145849 | | 1,00 ST | HYDRAULIKSCHLAUCH | HP HOSE | TUYAU FLEXIBLE HYDRAULIQUE |
| 4 | 1000031638 | 20,0/20,0 | 2,00 ST | SCHELLE | CLAMP | BRIDE |
| 5 | 1000048894 | | 2,00 ST | STIFTSCHRAUBE | STUD | GOUJON |
| 6 | 1000013022 | | 2,00 ST | 6KT-MUTTER | HEXAGON NUT | ÉCROU HEXAGONAL |
| 7 | 1000031245 | | 2,00 ST | DECKPLATTE | COVER PLATE | PLAQUE DE RECOUVREMENT |
| 8 | 1000032192 | 20,0 | 2,00 ST | SCHELLE | CLAMP | BRIDE |
| 9 | 1000085310 | | 4,00 ST | 6KT-SCHRAUBE | HEX SCREW | VIS À TÊTE HEXAGONALE |
| 10 | 1000031643 | | 2,00 ST | DECKPLATTE | COVER PLATE | PLAQUE DE RECOUVREMENT |
| 11 | 1000145859 | | 1,00 ST | HYDRAULIKSCHLAUCH | HP HOSE | TUYAU FLEXIBLE HYDRAULIQUE |
| 12 | 1000145487 | | 1,00 ST | HYDRAULIKSCHLAUCH | HP HOSE | TUYAU FLEXIBLE HYDRAULIQUE |
| 13 | 1000105380 | | 1,00 ST | HYDRAULIKROHR | HYDRAULIC PIPE | TUBE HYDRAULIQUE |
| 14 | 1000145497 | | 1,00 ST | HYDRAULIKROHR | HYDRAULIC PIPE | TUBE HYDRAULIQUE |
| 15 | 1000032383 | 25,0 PA | 1,00 ST | SCHELLE | CLAMP | BRIDE |
| 16 | 1000031643 | | 1,00 ST | DECKPLATTE | COVER PLATE | PLAQUE DE RECOUVREMENT |
| 17 | 1000085310 | | 2,00 ST | 6KT-SCHRAUBE | HEX SCREW | VIS À TÊTE HEXAGONALE |
| 18 | 1000028243 | | 2,00 ST | VERSCHLUSSBUTZEN | LOCK PIECE | PIÈCE DE FERMETURE |
| 19 | 1000050505 | | 2,00 ST | ÜBERWURFMUTTER | UNION NUT | ÉCROU À CHAPEAU |

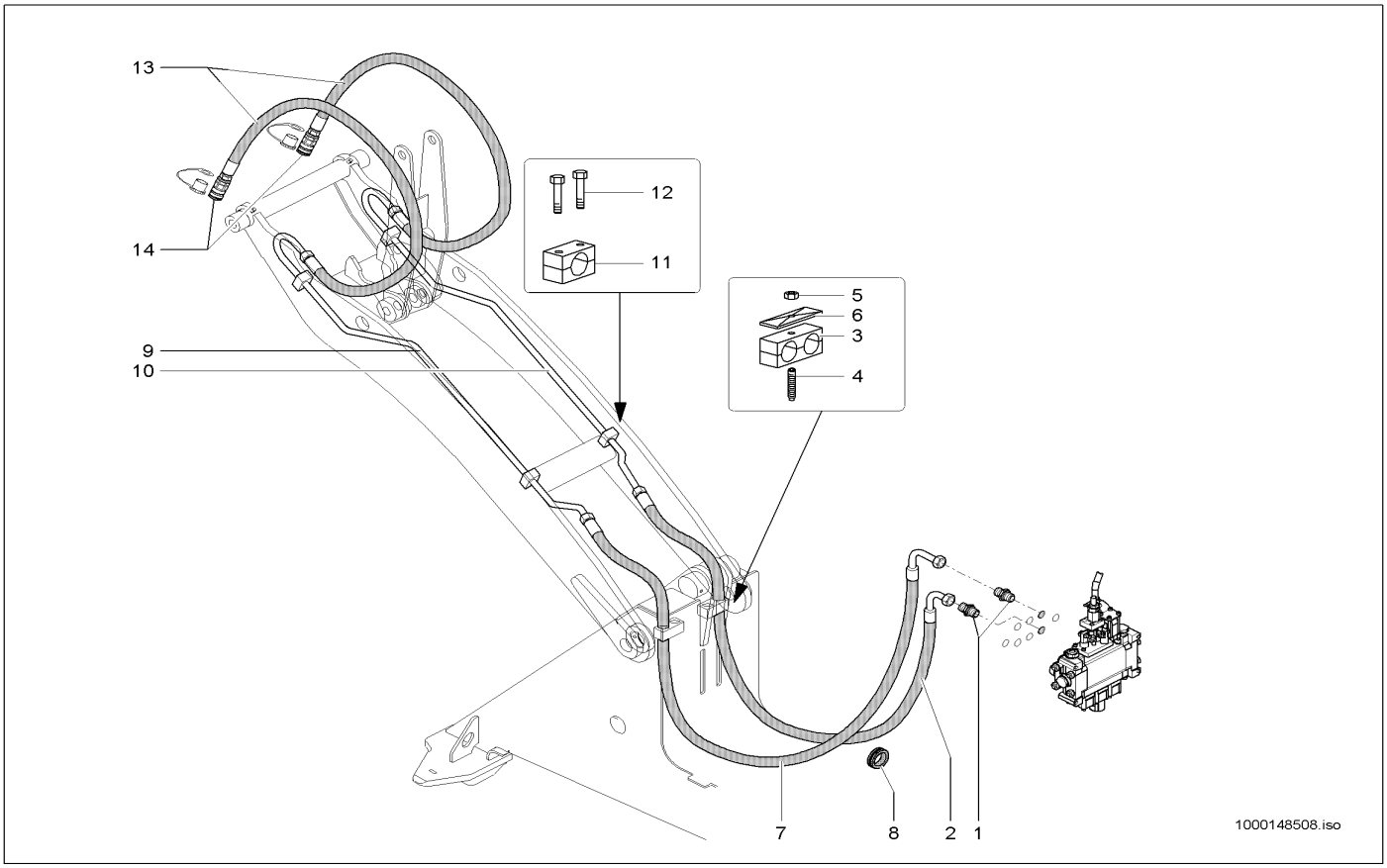


| Pos | Art.-Nr. | Anm. | Q'TY | BEZEICHNUNG | PART NAME | DESIGNATION |
|---|---|---|---|---|---|---|
| 1 | 1000015494 | | 2,00 ST | VERSCHRAUBUNG | SCREW JOINT | RACCORD UNION |
| 2 | 1000145846 | | 1,00 ST | HYDRAULIKSCHLAUCH | HP HOSE | TUYAU FLEXIBLE HYDRAULIQUE |
| 3 | 1000031638 | 20,0/20,0 | 2,00 ST | SCHELLE | CLAMP | BRIDE |
| 4 | 1000048894 | | 2,00 ST | STIFTSCHRAUBE | STUD | GOUJON |
| 5 | 1000013022 | | 2,00 ST | 6KT-MUTTER | HEXAGON NUT | ÉCROU HEXAGONAL |
| 6 | 1000031245 | | 2,00 ST | DECKPLATTE | COVER PLATE | PLAQUE DE RECOUVREMENT |
| 7 | 1000145847 | | 1,00 ST | HYDRAULIKSCHLAUCH | HP HOSE | TUYAU FLEXIBLE HYDRAULIQUE |
| 8 | 1000033872 | | 3,00 ST | DURCHFÜHRUNGSRING | JUNCTION | ANNEAU D'APPLICATION |
| 9 | 1000098933 | | 1,00 ST | HYDRAULIKROHR | HYDRAULIC PIPE | TUBE HYDRAULIQUE |
| 10 | 1000098934 | | 1,00 ST | HYDRAULIKROHR | HYDRAULIC PIPE | TUBE HYDRAULIQUE |
| 11 | 1000032051 | 15,0 | 4,00 ST | SCHELLE | CLAMP | BRIDE |
| 12 | 1000048166 | | 8,00 ST | ZYLINDERSCHRAUBE | CHEESE HEAD SCREW | VIS A TETE CYLINDRIQUE |
| 13 | 1000106732 | | 2,00 ST | HYDRAULIKSCHLAUCH | HP HOSE | TUYAU FLEXIBLE HYDRAULIQUE |
| 14 | 1000019246 | | 2,00 ST | SCHNELLVERSCHLUßKUPPLUNG | QUICK LOCK COUPLING | COUPLEUR À FERMETURE RAPIDE |

# ÖLBEHÄLTER
# OIL TANK
# RÉSERVOIR D'HUILE

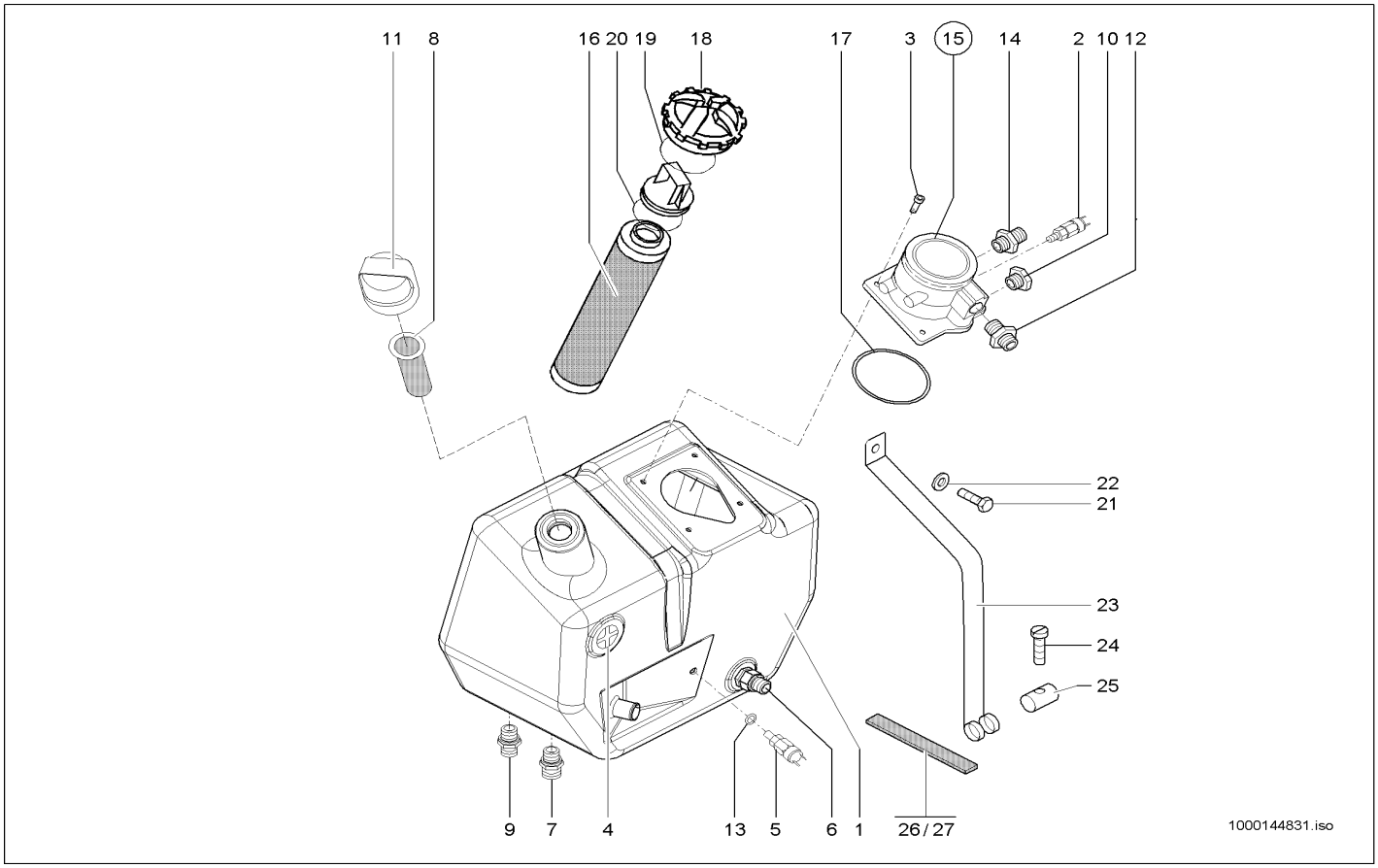


| Pos | Art.-Nr. | Anm. | Q'TY | BEZEICHNUNG | PART NAME | DESIGNATION |
|---|---|---|---|---|---|---|
| 1 | 1000035515 | | 1,00 ST | HYDRAULIKTANK | HYDRAULIC TANK | RÉSERVOIR HYDRAULIQUE |
| 2 | 1000005154 | | 1,00 ST | DRUCKSCHALTER | PRESSURE SWITCH | INTERRUPTEUR DE PRESSION |
| 3 | 1000015354 | | 4,00 ST | ZYLINDERSCHRAUBE | CHEESE HEAD SCREW | VIS A TETE CYLINDRIQUE |
| 4 | 1000022318 | | 1,00 ST | ÖLSTANDSAUGE | OILLEVEL SIGHT GLASS | OEIL DU NIVAU D'HUILE |
| 5 | 1000027555 | | 1,00 ST | TEMPERATURSCHALTER | TEMPERATURE SWITCH | INTERRUPTEUR DE TÉMPERATURE |
| 6 | 1000107702 | | 1,00 ST | RÜCKSCHLAGVENTIL | NON RETURN VALVE | SOUPAPE DE RETENUE |
| 7 | 1000028095 | | 1,00 ST | ABLAßKUPPLUNG | DRAIN COUPLING | COUPLEUR DE PURGE |
| 8 | 1000028238 | | 1,00 ST | SIEB | SCREEN | CRIBLE |
| 9 | 1000028596 | | 1,00 ST | VERSCHRAUBUNG | SCREW JOINT | RACCORD UNION |
| 10 | 1000030655 | | 1,00 ST | VERSCHLUSSSCHRAUBE | LOCK SCREW | VIS DE FERMETURE |
| 11 | 1000052149 | | 1,00 ST | BELÜFTUNGSFILTER | VENTING FILTER | FILTRE D'AÉRATION |
| 12 | 1000085107 | | 1,00 ST | VERSCHRAUBUNG | SCREW JOINT | RACCORD UNION |
| 13 | 1000022510 | | 1,00 ST | DICHTRING | SEAL RING | BAGUE D'ÉTANCHÉITÉ |
| 14 | 1000100732 | | 1,00 ST | VERSCHRAUBUNG | SCREW JOINT | RACCORD UNION |
| 15 | 1000027665 | | 1,00 ST | RÜCKLAUF-SAUGFILTER | REFLUX SUCTION FILTER | FILTRE DE REFLUX ASPIRANT |
| 16 | 1000000567 | | 1,00 ST | FILTEREINSATZ | FILTER INSERT | CARTOUCHE |
| 17 | 1000090401 | | 1,00 ST | O-RING | O-RING | ANNEAU EN O |
| 18 | 1000000538 | | 1,00 ST | DECKEL | COVER | COUVERCLE |
| 19 | 1000000923 | | 1,00 ST | O-RING | O-RING | ANNEAU EN O |
| 20 | 1000000900 | | 1,00 ST | O-RING | O-RING | ANNEAU EN O |
| 21 | 1000085389 | M8x12 | 1,00 ST | 6KT-SCHRAUBE | HEX SCREW | VIS À TÊTE HEXAGONALE |
| 22 | 1000013027 | 8,4 | 1,00 ST | SCHEIBE | WASHER | RONDELLE |
| 23 | 1000032402 | 6x40 | 1,00 ST | SPANNBAND | CLMAP STRAP | COLLIER TENDEUR |
| 24 | 1000085458 | | 1,00 ST | ZYLINDERSCHRAUBE | CHEESE HEAD SCREW | VIS A TETE CYLINDRIQUE |
| 25 | 1000030423 | | 1,00 ST | BOLZEN | PIN | AXE |
| 26 | 1000033239 | L 470 | 2,00 ST | GUMMI | RUBBER | CAOUTCHOUC |
| 27 | 1000033273 | L 430 | 2,00 ST | GUMMI | RUBBER | CAOUTCHOUC |

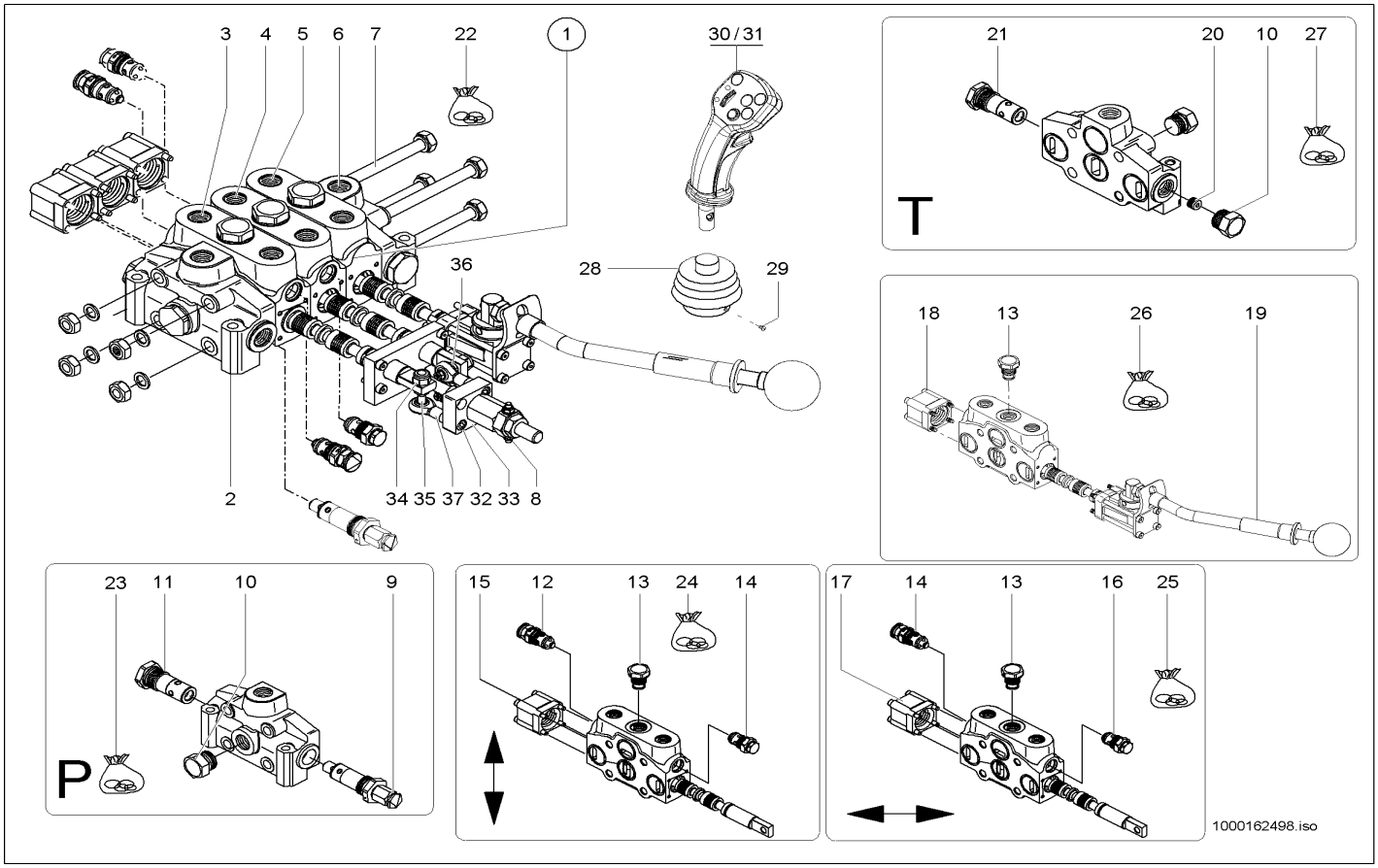


| Pos | Art.-Nr. | Anm. | Q'TY | BEZEICHNUNG | PART NAME | DESIGNATION |
|---|---|---|---|---|---|---|
| 1 | 1000135817 | | 1,00 ST | STEUERGERÄT | DISTRIBUTOR | APPAREIL DE COMMANDE |
| 2 | 1000144832 | | 1,00 ST | VENTILBLOCK | VALVE BLOCK | BLOC DE SOUPAPE |
| 3 | 1000144833 | | 1,00 ST | VENTILBLOCK | VALVE BLOCK | BLOC DE SOUPAPE |
| 4 | 1000144834 | | 1,00 ST | VENTILBLOCK | VALVE BLOCK | BLOC DE SOUPAPE |
| 5 | 1000144835 | | 1,00 ST | VENTILBLOCK | VALVE BLOCK | BLOC DE SOUPAPE |
| 6 | 1000144836 | | 1,00 ST | VENTILBLOCK | VALVE BLOCK | BLOC DE SOUPAPE |
| 7 | 1000144837 | | 4,00 ST | ZUGANKER | TIE ROD | TIGE D'ANCRAGE |
| 8 | 1000144838 | | 1,00 ST | KREUZGELENK | CROSS UNION | JOINT UNIVERSEL |
| 9 | 1000144839 | | 1,00 ST | VENTIL | VALVE | SOUPAPE |
| 10 | 1000144840 | | 2,00 ST | STOPFEN | PLUG | BOUCHON |
| 11 | 1000144861 | | 1,00 ST | VENTIL | VALVE | SOUPAPE |
| 12 | 1000144862 | | 1,00 ST | VENTIL | VALVE | SOUPAPE |
| 13 | 1000144863 | | 3,00 ST | VENTIL | VALVE | SOUPAPE |
| 14 | 1000144864 | | 2,00 ST | VENTIL | VALVE | SOUPAPE |
| 15 | 1000144865 | | 1,00 ST | GEHÄUSE | HOUSING | BOÎTE |
| 16 | 1000144866 | | 1,00 ST | VENTIL | VALVE | SOUPAPE |
| 17 | 1000144867 | | 1,00 ST | GEHÄUSE | HOUSING | BOÎTE |
| 18 | 1000144868 | | 1,00 ST | GEHÄUSE | HOUSING | BOÎTE |
| 19 | 1000144869 | | 1,00 ST | STEUERHEBEL | CONTROL LEVER | LEVIER DE COMMANDE |
| 20 | 1000144870 | | 1,00 ST | STOPFEN | PLUG | BOUCHON |
| 21 | 1000144871 | | 1,00 ST | VENTIL | VALVE | SOUPAPE |
| 22 | 1000144873 | | 1,00 ST | DICHTSATZ | SEAL KIT | POCHETTE DE JOINTS |
| 23 | 1000144874 | | 1,00 ST | DICHTSATZ | SEAL KIT | POCHETTE DE JOINTS |
| 24 | 1000144875 | | 1,00 ST | DICHTSATZ | SEAL KIT | POCHETTE DE JOINTS |
| 25 | 1000144876 | | 1,00 ST | DICHTSATZ | SEAL KIT | POCHETTE DE JOINTS |
| 26 | 1000144877 | | 1,00 ST | DICHTSATZ | SEAL KIT | POCHETTE DE JOINTS |
| 27 | 1000144878 | | 1,00 ST | DICHTSATZ | SEAL KIT | POCHETTE DE JOINTS |
| 28 | 1000033147 | | 1,00 ST | FALTENBALG | BELLOW | SOUFFLET |
| 29 | 1000092263 | | 1,00 ST | LINSENSCHRAUBE | OVALHEAD SCREW | VIS NOYÉE À TÊTE BOMBÉ |
| 30 | 1000136956 | A:347010109 | 1,00 ST | STEUERHEBEL | CONTROL LEVER | LEVIER DE COMMANDE |
| 31 | 1000148707 | E:347010110 | 1,00 ST | STEUERHEBEL | CONTROL LEVER | LEVIER DE COMMANDE |
| 32 | 1000160707 | | 4,00 ST | ZYLINDERSCHRAUBE | CHEESE HEAD SCREW | VIS À TÊTE CYLINDRIQUE |
| 33 | 1000160704 | | 1,00 ST | PLATTE | PLATE | PLAQUE |
| 34 | 1000160705 | | 1,00 ST | MUTTER | NUT | ÉCROU |
| 35 | 1000160702 | | 1,00 ST | BOLZEN | PIN | AXE |
| 36 | 1000160708 | | 2,00 ST | BOLZEN | PIN | AXE |
| 37 | 1000160701 | | 3,00 ST | GELENKSTÜCK | JOINT | ARTICULATION |

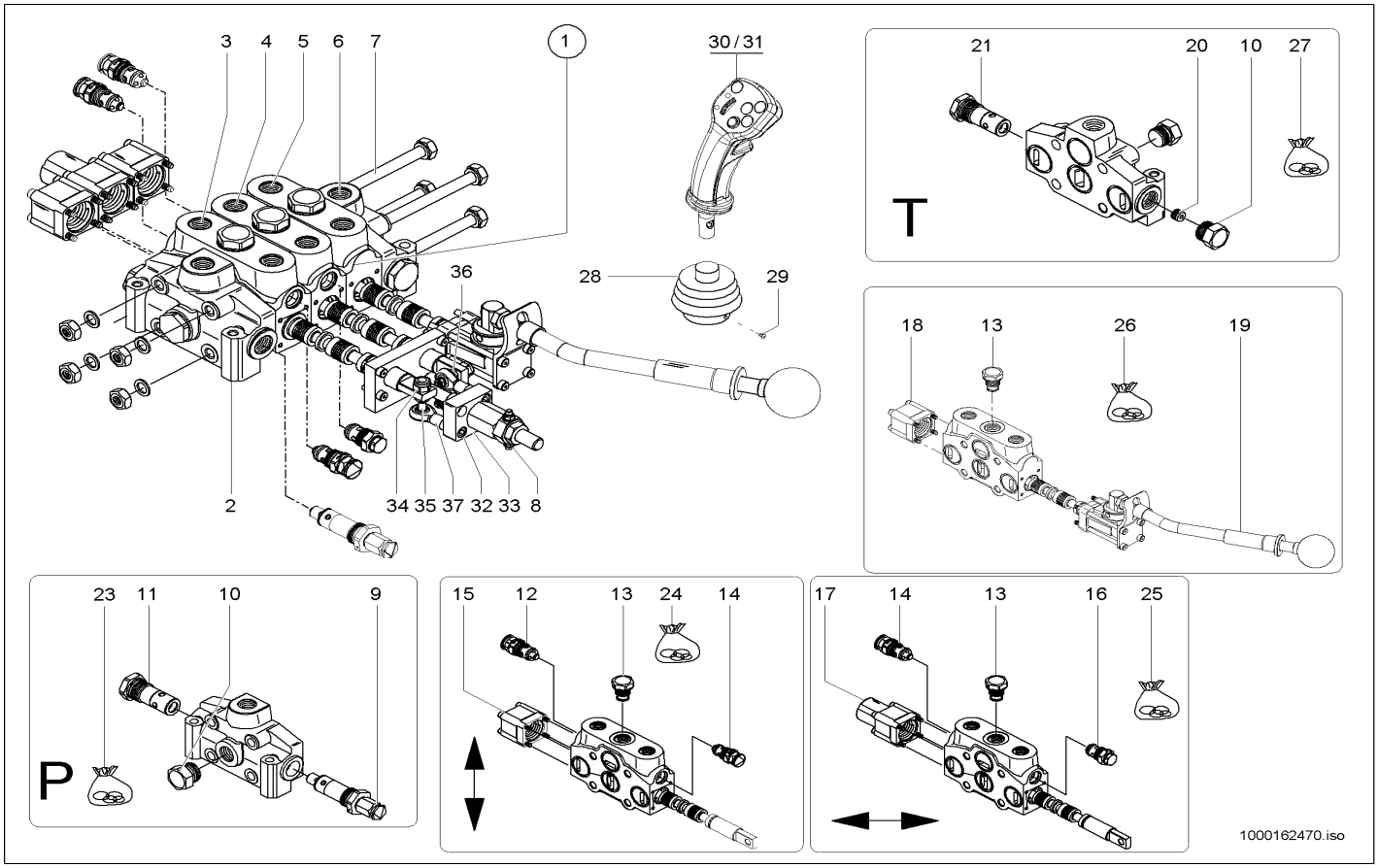


| Pos | Art.-Nr. | Anm. | Q'TY | BEZEICHNUNG | PART NAME | DESIGNATION |
|---|---|---|---|---|---|---|
| 1 | 1000135818 | | 1,00 ST | STEUERGERÄT | DISTRIBUTOR | APPAREIL DE COMMANDE |
| 2 | 1000144832 | | 1,00 ST | VENTILBLOCK | VALVE BLOCK | BLOC DE SOUPAPE |
| 3 | 1000144833 | | 1,00 ST | VENTILBLOCK | VALVE BLOCK | BLOC DE SOUPAPE |
| 4 | 1000144879 | | 1,00 ST | VENTILBLOCK | VALVE BLOCK | BLOC DE SOUPAPE |
| 5 | 1000144835 | | 1,00 ST | VENTILBLOCK | VALVE BLOCK | BLOC DE SOUPAPE |
| 6 | 1000144836 | | 1,00 ST | VENTILBLOCK | VALVE BLOCK | BLOC DE SOUPAPE |
| 7 | 1000144837 | | 4,00 ST | ZUGANKER | TIE ROD | TIGE D'ANCRAGE |
| 8 | 1000144880 | | 1,00 ST | KREUZGELENK | CROSS UNION | JOINT UNIVERSEL |
| 9 | 1000144839 | | 1,00 ST | VENTIL | VALVE | SOUPAPE |
| 10 | 1000144840 | | 3,00 ST | STOPFEN | PLUG | BOUCHON |
| 11 | 1000144861 | | 1,00 ST | VENTIL | VALVE | SOUPAPE |
| 12 | 1000144862 | | 1,00 ST | VENTIL | VALVE | SOUPAPE |
| 13 | 1000144863 | | 3,00 ST | VENTIL | VALVE | SOUPAPE |
| 14 | 1000144864 | | 2,00 ST | VENTIL | VALVE | SOUPAPE |
| 15 | 1000144865 | | 1,00 ST | GEHÄUSE | HOUSING | BOÎTE |
| 16 | 1000144866 | | 1,00 ST | VENTIL | VALVE | SOUPAPE |
| 17 | 1000144881 | | 1,00 ST | GEHÄUSE | HOUSING | BOÎTE |
| 18 | 1000144868 | | 1,00 ST | GEHÄUSE | HOUSING | BOÎTE |
| 19 | 1000144869 | | 1,00 ST | STEUERHEBEL | CONTROL LEVER | LEVIER DE COMMANDE |
| 20 | 1000144870 | | 1,00 ST | STOPFEN | PLUG | BOUCHON |
| 21 | 1000144871 | | 1,00 ST | VENTIL | VALVE | SOUPAPE |
| 22 | 1000144882 | | 1,00 ST | DICHTSATZ | SEAL KIT | POCHETTE DE JOINTS |
| 23 | 1000144875 | | 1,00 ST | DICHTSATZ | SEAL KIT | POCHETTE DE JOINTS |
| 24 | 1000144876 | | 1,00 ST | DICHTSATZ | SEAL KIT | POCHETTE DE JOINTS |
| 25 | 1000144877 | | 1,00 ST | DICHTSATZ | SEAL KIT | POCHETTE DE JOINTS |
| 26 | 1000144874 | | 1,00 ST | DICHTSATZ | SEAL KIT | POCHETTE DE JOINTS |
| 27 | 1000144878 | | 1,00 ST | DICHTSATZ | SEAL KIT | POCHETTE DE JOINTS |
| 28 | 1000033147 | | 1,00 ST | FALTENBALG | BELLOW | SOUFFLET |
| 29 | 1000092263 | | 1,00 ST | LINSENSCHRAUBE | OVALHEAD SCREW | VIS NOYÉE À TÊTE BOMBÉ |
| 30 | 1000136956 | A:347010109 | 1,00 ST | STEUERHEBEL | CONTROL LEVER | LEVIER DE COMMANDE |
| 31 | 1000148707 | E:347010110 | 1,00 ST | STEUERHEBEL | CONTROL LEVER | LEVIER DE COMMANDE |
| 32 | 1000160707 | | 4,00 ST | ZYLINDERSCHRAUBE | CHEESE HEAD SCREW | VIS À TÊTE CYLINDRIQUE |
| 33 | 1000160704 | | 1,00 ST | PLATTE | PLATE | PLAQUE |
| 34 | 1000160705 | | 1,00 ST | MUTTER | NUT | ÉCROU |
| 35 | 1000160702 | | 1,00 ST | BOLZEN | PIN | AXE |
| 36 | 1000160708 | | 2,00 ST | BOLZEN | PIN | AXE |
| 37 | 1000160701 | | 3,00 ST | GELENKSTÜCK | JOINT | ARTICULATION |

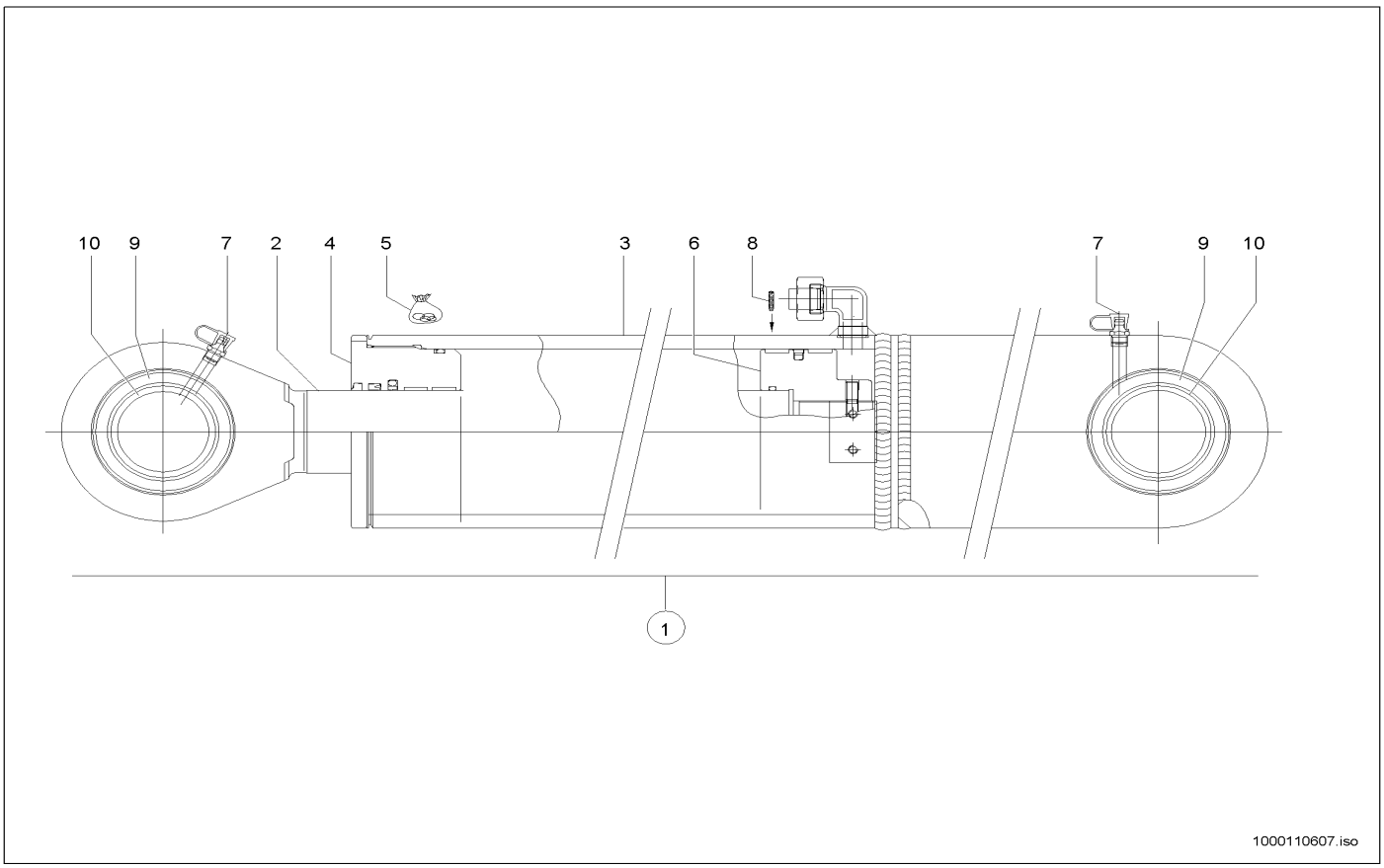


| Pos | Art.-Nr. | Anm. | Q'TY | BEZEICHNUNG | PART NAME | DESIGNATION |
|---|---|---|---|---|---|---|
| 1 | 1000107247 | | 1,00 ST | HUBZYLINDER | LIFT CYLINDER | CYLINDRE DE LEVAGE |
| 2 | 1000110745 | | 1,00 ST | KOLBENSTANGE | PISTON ROD | TIGE DE PISTON |
| 3 | 1000110746 | | 1,00 ST | ZYLINDERROHR | CYLINDER PIPE | TUBE DE CYLINDRE |
| 4 | 1000110747 | | 1,00 ST | FÜHRUNGSBUCHSE | GUIDE BUSHING | BAGUE DE GUIDAGE |
| 5 | 1000110748 | | 1,00 ST | DICHTUNGSSATZ | SEALING KIT | JEU DE JOINTS |
| 6 | 1000110749 | | 1,00 ST | KOLBEN | PISTON | PISTON |
| 7 | 1000110743 | | 2,00 ST | SCHMIERNIPPEL | GREASE NIPPLE | GRAISSEUR À BILLE |
| 8 | 1000110750 | | 1,00 ST | MADENSCHRAUBE | MAGGOTSCREW | PRISONNIER |
| 9 | 1000139546 | | 2,00 ST | GELENKLAGER | PIVOTING BEARING | PALIER ARTICULÉ |
| 10 | 1000139547 | | 2,00 ST | SICHERUNGSRING | LOCK RING | BAGUE DE SÜRETÉ |

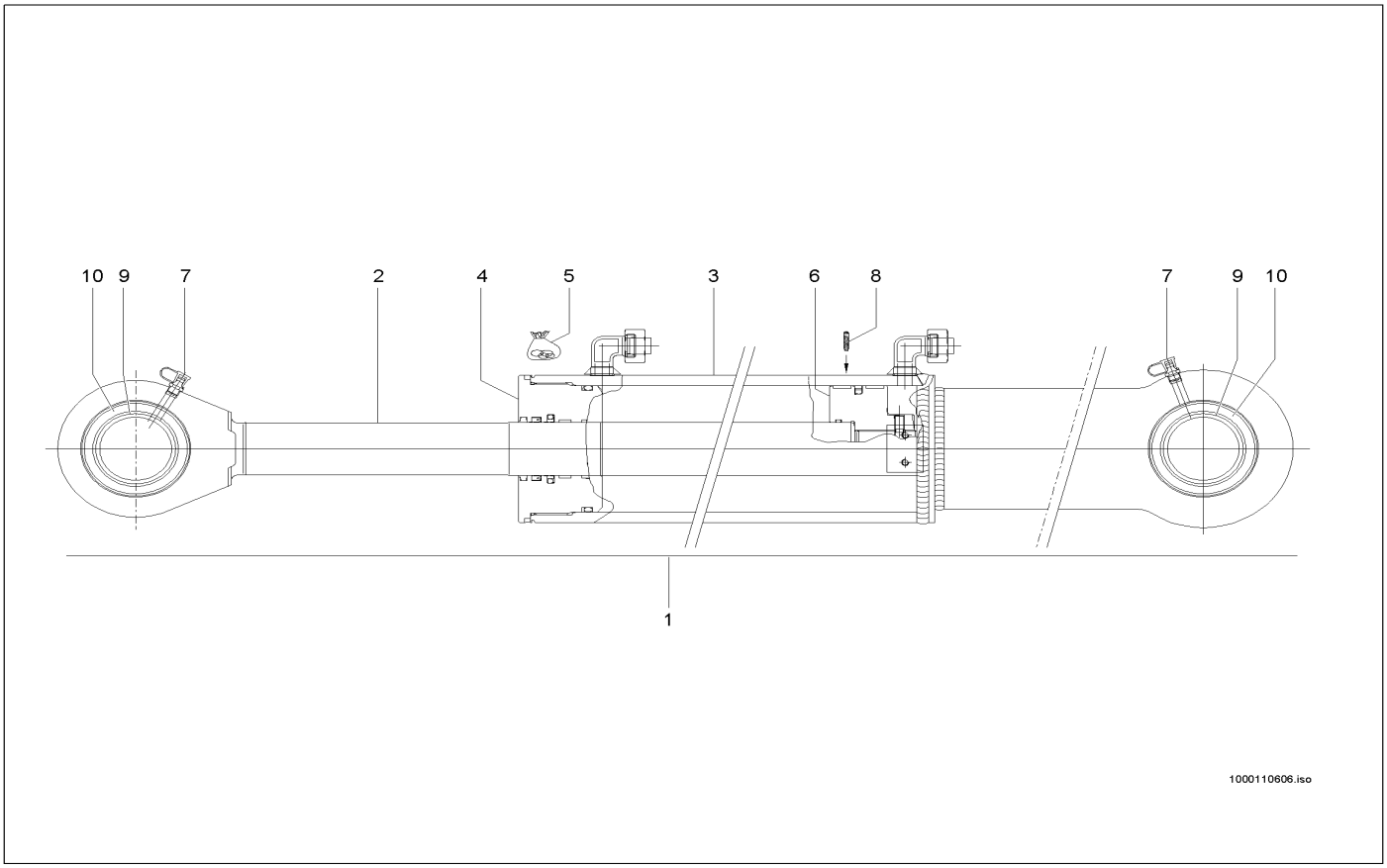


| Pos | Art.-Nr. | Anm. | Q'TY | BEZEICHNUNG | PART NAME | DESIGNATION |
|---|---|---|---|---|---|---|
| 1 | 1000100856 | | 1,00 ST | KIPPZYLINDER | TILT RAM | CYLINDRE BASCULANT |
| 2 | 1000110608 | | 1,00 ST | KOLBENSTANGE | PISTON ROD | TIGE DE PISTON |
| 3 | 1000110609 | | 1,00 ST | ZYLINDERROHR | CYLINDER PIPE | TUBE DE CYLINDRE |
| 4 | 1000110740 | | 1,00 ST | FÜHRUNGSBUCHSE | GUIDE BUSHING | BAGUE DE GUIDAGE |
| 5 | 1000110741 | | 1,00 ST | DICHTUNGSSATZ | SEALING KIT | JEU DE JOINTS |
| 6 | 1000110742 | | 1,00 ST | KOLBEN | PISTON | PISTON |
| 7 | 1000110743 | | 2,00 ST | SCHMIERNIPPEL | GREASE NIPPLE | GRAISSEUR À BILLE |
| 8 | 1000110744 | | 1,00 ST | MADENSCHRAUBE | MAGGOTSCREW | PRISONNIER |
| 9 | 1000139546 | | 2,00 ST | GELENKLAGER | PIVOTING BEARING | PALIER ARTICULÉ |
| 10 | 1000139547 | | 2,00 ST | SICHERUNGSRING | LOCK RING | BAGUE DE SÜRETÉ |

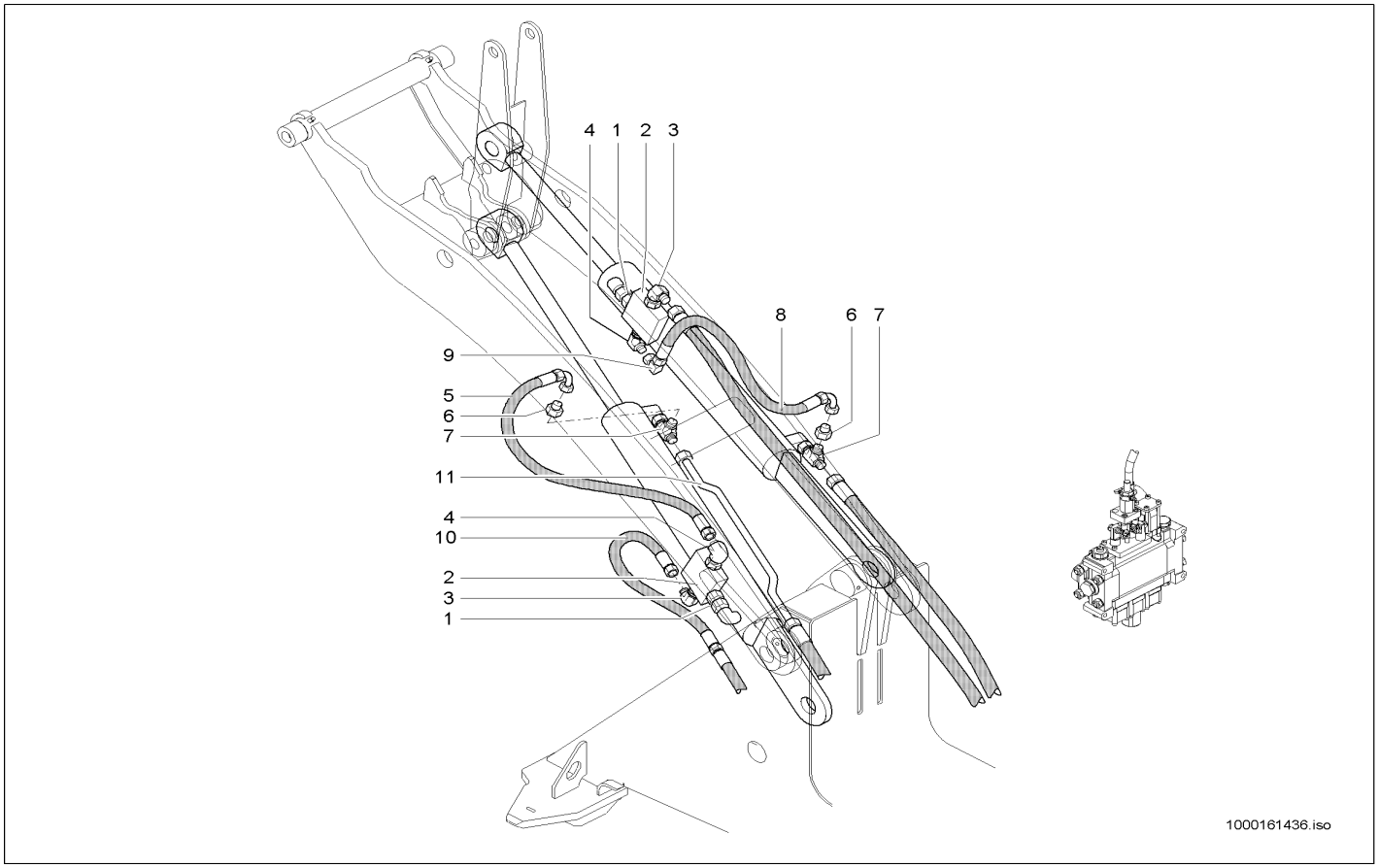


| Pos | Art.-Nr. | Anm. | Q'TY | BEZEICHNUNG | PART NAME | DESIGNATION |
|---|---|---|---|---|---|---|
| 1 | 1000015521 | | 2,00 ST | VERSCHRAUBUNG | SCREW JOINT | RACCORD UNION |
| 2 | 1000139769 | | 2,00 ST | VENTIL | VALVE | CLAPET |
| 3 | 1000028448 | | 2,00 ST | VERSCHRAUBUNG | SCREW JOINT | RACCORD UNION |
| 4 | 1000028677 | | 2,00 ST | VERSCHRAUBUNG | SCREW JOINT | RACCORD UNION |
| 5 | 1000145573 | | 1,00 ST | HYDRAULIKSCHLAUCH | HP HOSE | TUYAU FLEXIBLE HYDRAULIQUE |
| 6 | 1000085049 | | 2,00 ST | VERSCHRAUBUNG | SCREW JOINT | RACCORD UNION |
| 7 | 1000015539 | | 2,00 ST | VERSCHRAUBUNG | SCREW JOINT | RACCORD UNION |
| 8 | 1000029127 | | 1,00 ST | HYDRAULIKSCHLAUCH | HP HOSE | TUYAU FLEXIBLE HYDRAULIQUE |
| 9 | 1000000542 | | 1,00 ST | VERSCHRAUBUNG | SCREW JOINT | RACCORD UNION |
| 10 | 1000145578 | | 1,00 ST | HYDRAULIKSCHLAUCH | HP HOSE | TUYAU FLEXIBLE HYDRAULIQUE |
| 11 | 1000145498 | | 1,00 ST | HYDRAULIKROHR | HYDRAULIC PIPE | TUBE HYDRAULIQUE |
| 12 | 1000015512 | | 1,00 ST | VERSCHRAUBUNG | SCREW JOINT | RACCORD UNION |
| 13 | 1000105380 | | 1,00 ST | HYDRAULIKROHR | HYDRAULIC PIPE | TUBE HYDRAULIQUE |

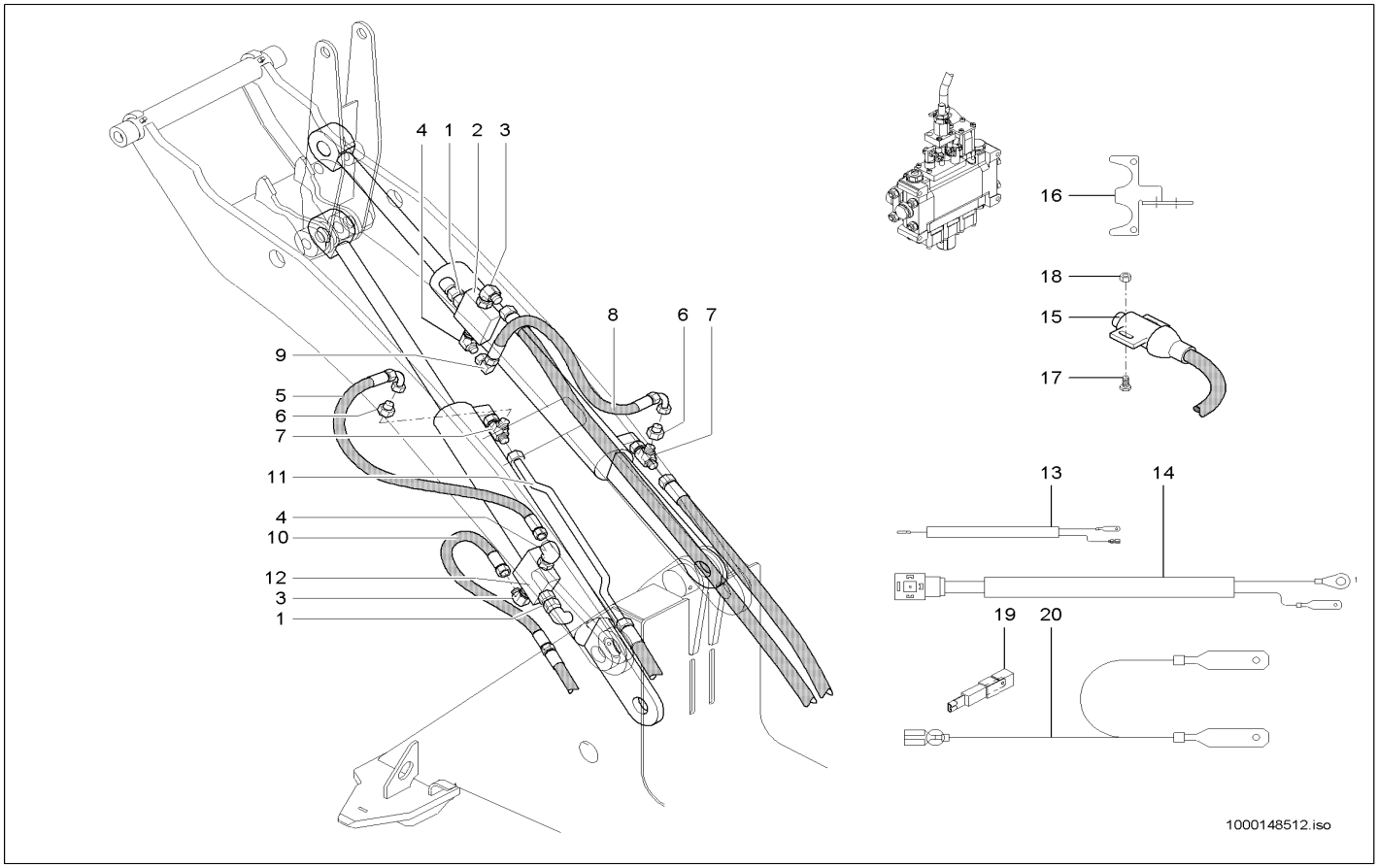


| Pos | Art.-Nr. | Anm. | Q'TY | BEZEICHNUNG | PART NAME | DESIGNATION |
|---|---|---|---|---|---|---|
| 1 | 1000015521 | | 2,00 ST | VERSCHRAUBUNG | SCREW JOINT | RACCORD UNION |
| 2 | 1000139769 | | 1,00 ST | VENTIL | VALVE | CLAPET |
| 3 | 1000028448 | | 2,00 ST | VERSCHRAUBUNG | SCREW JOINT | RACCORD UNION |
| 4 | 1000028677 | | 2,00 ST | VERSCHRAUBUNG | SCREW JOINT | RACCORD UNION |
| 5 | 1000145573 | | 1,00 ST | HYDRAULIKSCHLAUCH | HP HOSE | TUYAU FLEXIBLE HYDRAULIQUE |
| 6 | 1000085049 | | 2,00 ST | VERSCHRAUBUNG | SCREW JOINT | RACCORD UNION |
| 7 | 1000015539 | | 2,00 ST | VERSCHRAUBUNG | SCREW JOINT | RACCORD UNION |
| 8 | 1000029127 | | 1,00 ST | HYDRAULIKSCHLAUCH | HP HOSE | TUYAU FLEXIBLE HYDRAULIQUE |
| 9 | 1000000542 | | 1,00 ST | VERSCHRAUBUNG | SCREW JOINT | RACCORD UNION |
| 10 | 1000145578 | | 1,00 ST | HYDRAULIKSCHLAUCH | HP HOSE | TUYAU FLEXIBLE HYDRAULIQUE |
| 11 | 1000145498 | | 1,00 ST | HYDRAULIKROHR | HYDRAULIC PIPE | TUBE HYDRAULIQUE |
| 12 | 1000139770 | | 1,00 ST | VENTIL | VALVE | CLAPET |
| 13 | 1000141382 | | 1,00 ST | KABEL | CABLE | CÂBLE |
| 14 | 1000139716 | | 1,00 ST | KABEL | CABLE | CÂBLE |
| 15 | 1000051973 | | 1,00 ST | HANDBREMSSCHALTER | SWITCH | INTERRUPTEUR |
| 16 | 1000141236 | | 1,00 ST | HALTER | BRACKET CLUTCH | SUPPORT |
| 17 | 1000048111 | | 2,00 ST | ZYLINDERSCHRAUBE | CHEESE HEAD SCREW | VIS A TETE CYLINDRIQUE |
| 18 | 1000049057 | | 2,00 ST | 6KT-MUTTER | HEXAGON NUT | ÉCROU HEXAGONAL |
| 19 | 1000000433 | | 1,00 ST | SPERRDIODE | BLOCK DIODE | DIODE SUPPRESSEUSE |
| 20 | 1000141383 | | 1,00 ST | KABEL | CABLE | CÂBLE |

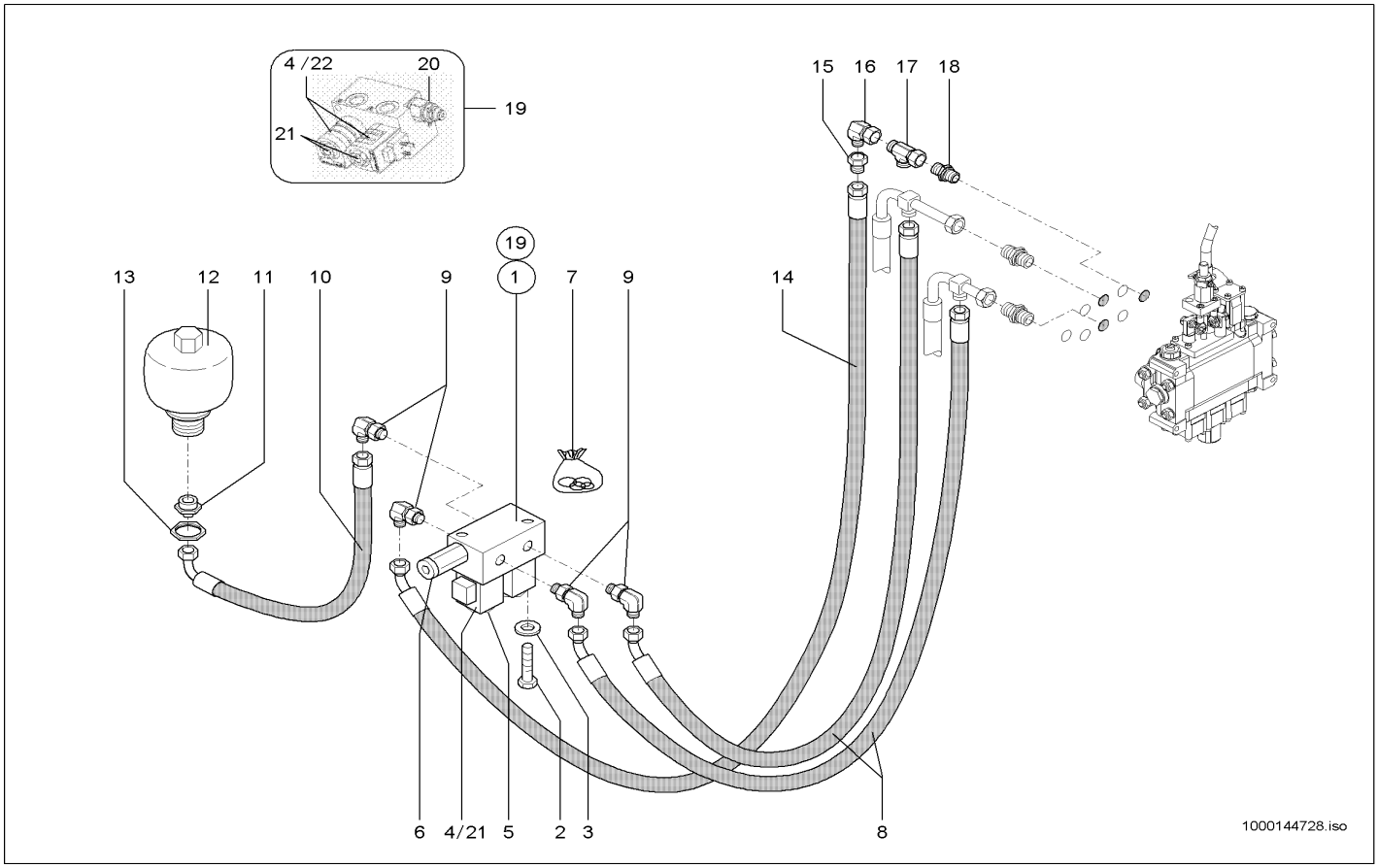


| Pos | Art.-Nr. | Anm. | Q'TY | BEZEICHNUNG | PART NAME | DESIGNATION |
|---|---|---|---|---|---|---|
| 1 | 1000027870 | A:346010718<br>A:346020432<br>A:347010201 | 1,00 ST | MAGNETVENTIL | SOLENOID VALVE | ÉLECTROVALVE |
| 2 | 1000048896 | | 2,00 ST | STIFTSCHRAUBE | STUD | GOUJON |
| 3 | 1000013022 | | 2,00 ST | 6KT-MUTTER | HEXAGON NUT | ÉCROU HEXAGONAL |
| 4 | 1000086388 | | 2,00 ST | MAGNET | SOLENOID | AIMANT |
| 5 | 1000030586 | A:346010718<br>A:346020432<br>A:347010201 | 2,00 ST | MUTTER | NUT | ÉCROU |
| 6 | 1000088457 | A:346010718<br>A:346020432<br>A:347010201 | 1,00 ST | VENTIL | VALVE | SOUPAPE |
| 7 | 1000086389 | A:346010718<br>A:346020432<br>A:347010201 | 1,00 ST | DICHTSATZ | SEAL KIT | POCHETTE DE JOINTS |
| 8 | 1000137770 | | 1,00 ST | HYDRAULIKSCHLAUCH | HP HOSE | TUYAU FLEXIBLE HYDRAULIQUE |
| 9 | 1000028701 | | 4,00 ST | VERSCHRAUBUNG | SCREW JOINT | RACCORD UNION |
| 10 | 1000137832 | | 1,00 ST | HYDRAULIKSCHLAUCH | HP HOSE | TUYAU FLEXIBLE HYDRAULIQUE |
| 11 | 1000085101 | | 1,00 ST | VERSCHRAUBUNG | SCREW JOINT | RACCORD UNION |
| 12 | 1000000551 | | 1,00 ST | DRUCKSPEICHER | PRESSURE ACCUMULATOR | ACCUMULATEUR DE PRESSION |
| 13 | 1000049039 | | 1,00 ST | 6KT-MUTTER | HEXAGON NUT | ÉCROU HEXAGONAL |
| 14 | 1000137831 | | 1,00 ST | HYDRAULIKSCHLAUCH | HP HOSE | TUYAU FLEXIBLE HYDRAULIQUE |
| 15 | 1000085040 | | 1,00 ST | VERSCHRAUBUNG | SCREW JOINT | RACCORD UNION |
| 16 | 1000020261 | | 1,00 ST | VERSCHRAUBUNG | SCREW JOINT | RACCORD UNION |
| 17 | 1000085045 | | 1,00 ST | VERSCHRAUBUNG | SCREW JOINT | RACCORD UNION |
| 18 | 1000052157 | | 1,00 ST | VERSCHRAUBUNG | SCREW JOINT | RACCORD UNION |
| 19 | 1000164847 | E:346010719<br>E:346020433<br>E:347010202 | 1,00 ST | MAGNETVENTIL | SOLENOID VALVE | ÉLECTROVALVE |
| 20 | 1000167270 | E:346010719<br>E:346020433<br>E:347010202 | 2,00 ST | DRUCKREDUZIERVENTIL | PRESSURE REDUCT.VALVE | SOUPAPE DE DÉCOMPRESSION |
| 21 | 1000086387 | E:346010719<br>E:346020433<br>E:347010202 | 2,00 ST | VENTILEINSATZ | VALVE | MISE DE SOUPAPE |
| 22 | 1000167268 | E:346010719<br>E:346020433<br>E:347010202 | 4,00 ST | O-RING | O-RING | ANNEAU EN O |

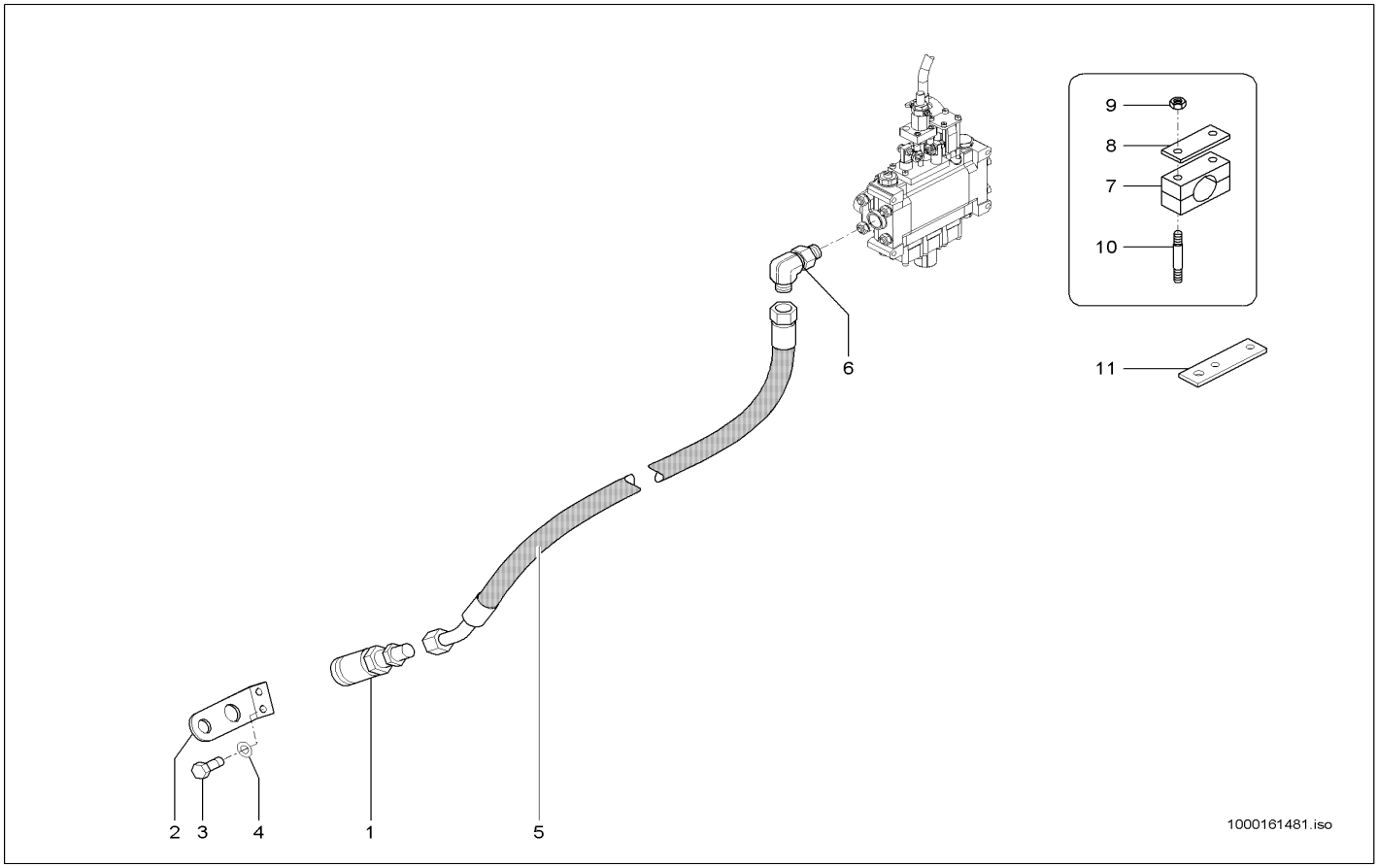


| Pos | Art.-Nr. | Anm. | Q'TY | BEZEICHNUNG | PART NAME | DESIGNATION |
|---|---|---|---|---|---|---|
| 1 | 1000099711 | | 1,00 ST | KUPPLUNGSDOSE | COUPLING SOCKET | BOÎTE D'COUPLEUR |
| 2 | 1000113299 | | 1,00 ST | HALTER | BRACKET CLUTCH | SUPPORT |
| 3 | 1000013008 | | 2,00 ST | 6KT-SCHRAUBE | HEX SCREW | VIS À TÊTE HEXAGONALE |
| 4 | 1000013027 | | 2,00 ST | SCHEIBE | WASHER | RONDELLE |
| 5 | 1000145491 | | 1,00 ST | HYDRAULIKSCHLAUCH | HP HOSE | TUYAU FLEXIBLE HYDRAULIQUE |
| 6 | 1000052154 | | 1,00 ST | VERSCHRAUBUNG | SCREW JOINT | RACCORD UNION |
| 7 | 1000032250 | | 2,00 ST | SCHELLE | CLAMP | BRIDE |
| 8 | 1000099794 | | 2,00 ST | DECKPLATTE | COVER PLATE | PLAQUE DE RECOUVREMENT |
| 9 | 1000085588 | | 4,00 ST | 6KT-MUTTER | HEXAGON NUT | ÉCROU HEXAGONAL |
| 10 | 1000048880 | | 4,00 ST | STIFTSCHRAUBE | STUD | GOUJON |
| 11 | 1000144187 | | 1,00 ST | HALTER | BRACKET CLUTCH | SUPPORT |

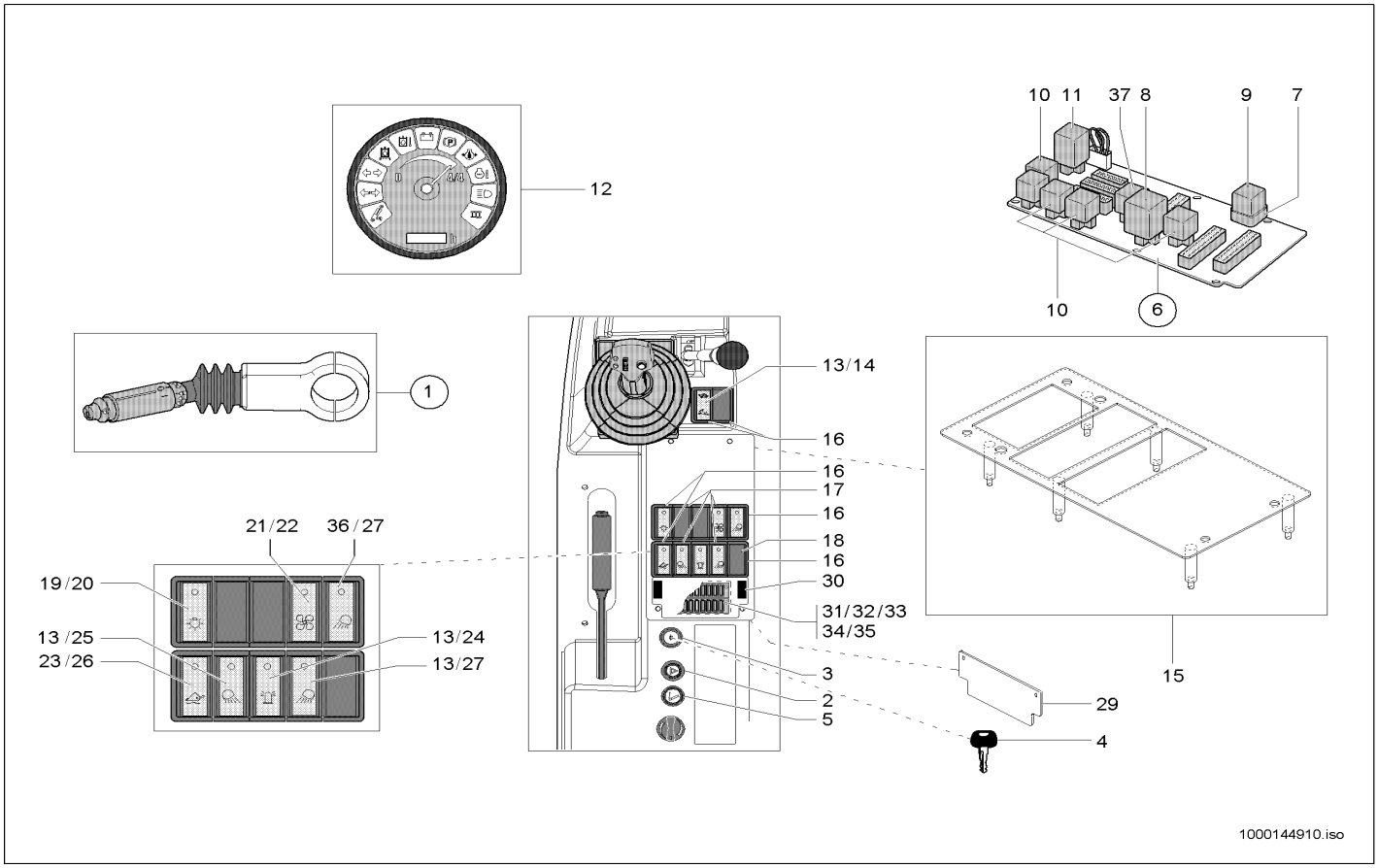


| Pos | Art.-Nr. | Anm. | Q'TY | BEZEICHNUNG | PART NAME | DESIGNATION |
|---|---|---|---|---|---|---|
| 1 | 1000105182 | | 1,00 ST | LENKSTOCKSCHALTER | STEERINGSTICK SWITCH | INTERRUPTEUR DE BÂTON DE DIRECTIC |
| 2 | 1000027198 | | 1,00 ST | SCHALTER WARNBLINKANLAGE | SWITCH HAZARD WARNING DEV. | INTERRUPTEUR SYSTÈME FEUX DÉTRESSE |
| 3 | 1000125516 | | 1,00 ST | GLÜHSTARTSCHALTER | GLOW START SWITCH | COMMUATEUR DE DÉPART DE RÉCHAUFFAGE |
| 4 | 1000000459 | | 1,00 ST | SCHLÜSSEL | KEY | CLÉ |
| 5 | 1000098285 | | 1,00 ST | ZIGARETTENANZÜNDER | CIGARET LIGHTER | ALLUME FEUX |
| 6 | 1000051972 | | 1,00 ST | PLATINE | PLATINE | PLATINE |
| 7 | 1000085587 | | 6,00 ST | 6KT-MUTTER | HEXAGON NUT | ÉCROU HEXAGONAL |
| 8 | 1000027088 | 12V-10/15A | 1,00 ST | ZEITRELAIS | TIME RELAY | RELAIS TEMPORISATEUR |
| 9 | 1000154042 | 70 A | 1,00 ST | RELAIS | RELAY | RELAIS |
| 10 | 1000154043 | 40/60A | 5,00 ST | RELAIS | RELAY | RELAIS |
| 11 | 1000147918 | 12V | 1,00 ST | BLINKRELAIS | RELAY | RELAIS |
| 12 | 1000127393 | | 1,00 ST | ANZEIGEINSTRUMENT | INDICATOR INSTRUMENT | INSTRUMENT D'INDICATION |
| 13 | 1000051959 | | 5,00 ST | KIPPSCHALTER | TILT SWITCH | INTERRUPTEUR À BASCULE |
| 14 | 1000158729 | | 1,00 ST | SYMBOL | SYMBOL | SYMBOLE |
| 15 | 1000133758 | | 1,00 ST | KONSOLE | CONSOLE | CONSOLE |
| 16 | 1000027168 | | 6,00 ST | SCHALTERRAHMEN | SWITCH FRAME | CADRE DE INTERRUPTEUR |
| 17 | 1000027178 | | 6,00 ST | RAHMEN | FRAME | CADRE |
| 18 | 1000027006 | | 9,00 ST | BLINDDECKEL | BLIND COVER | COUVERCLE AVEUGLE |
| 19 | 1000051958 | | 1,00 ST | KIPPSCHALTER | TILT SWITCH | INTERRUPTEUR À BASCULE |
| 20 | 1000115420 | | 1,00 ST | ZUS-EINSATZ | SYMBOL | SYMBOLE |
| 21 | 1000051967 | | 1,00 ST | KIPPSCHALTER | TILT SWITCH | INTERRUPTEUR À BASCULE |
| 22 | 1000052358 | | 1,00 ST | ZUS-EINSATZ | SYMBOL | SYMBOLE |
| 23 | 1000051962 | | 1,00 ST | KIPPSCHALTER | TILT SWITCH | INTERRUPTEUR À BASCULE |
| 24 | 1000052356 | | 1,00 ST | ZUS-EINSATZ | SYMBOL | SYMBOLE |
| 25 | 1000052361 | | 1,00 ST | ZUS-EINSATZ | SYMBOL | SYMBOLE |
| 26 | 1000052377 | | 1,00 ST | ZUS-EINSATZ | SYMBOL | SYMBOLE |
| 27 | 1000096654 | | 1,00 ST | SYMBOL SCHEINWERFER | SYMBOL HEADLIGHT | SYMBOLE DU PHARE |
| 28 | 1000052354 | | 1,00 ST | ZUS-EINSATZ | SYMBOL | SYMBOLE |
| 29 | 1000050978 | | 1,00 ST | ABDECKUNG | COVER | COUVERCLE |
| 30 | 1000051999 | | 2,00 ST | VERSCHLUSS | LOCK | FERMETURE |
| 31 | 1000052490 | C5 | 5,00 ST | FLACHSICHERUNG | LOCK | SÛRETÉ |
| 32 | 1000095374 | 7,5 | 7,00 ST | FLACHSICHERUNG | LOCK | SÛRETÉ |
| 33 | 1000085683 | 15 | 1,00 ST | FLACHSICHERUNG | LOCK | SÛRETÉ |
| 34 | 1000085684 | 20 | 1,00 ST | FLACHSICHERUNG | LOCK | SÛRETÉ |
| 35 | 1000085685 | 25 | 2,00 ST | FLACHSICHERUNG | LOCK | SÛRETÉ |
| 36 | 1000051971 | | 1,00 ST | TASTER | FEELER | PALPEUR |
| 37 | 1000051953 | 10A/15A | 1,00 ST | RELAIS | RELAY | RELAIS |

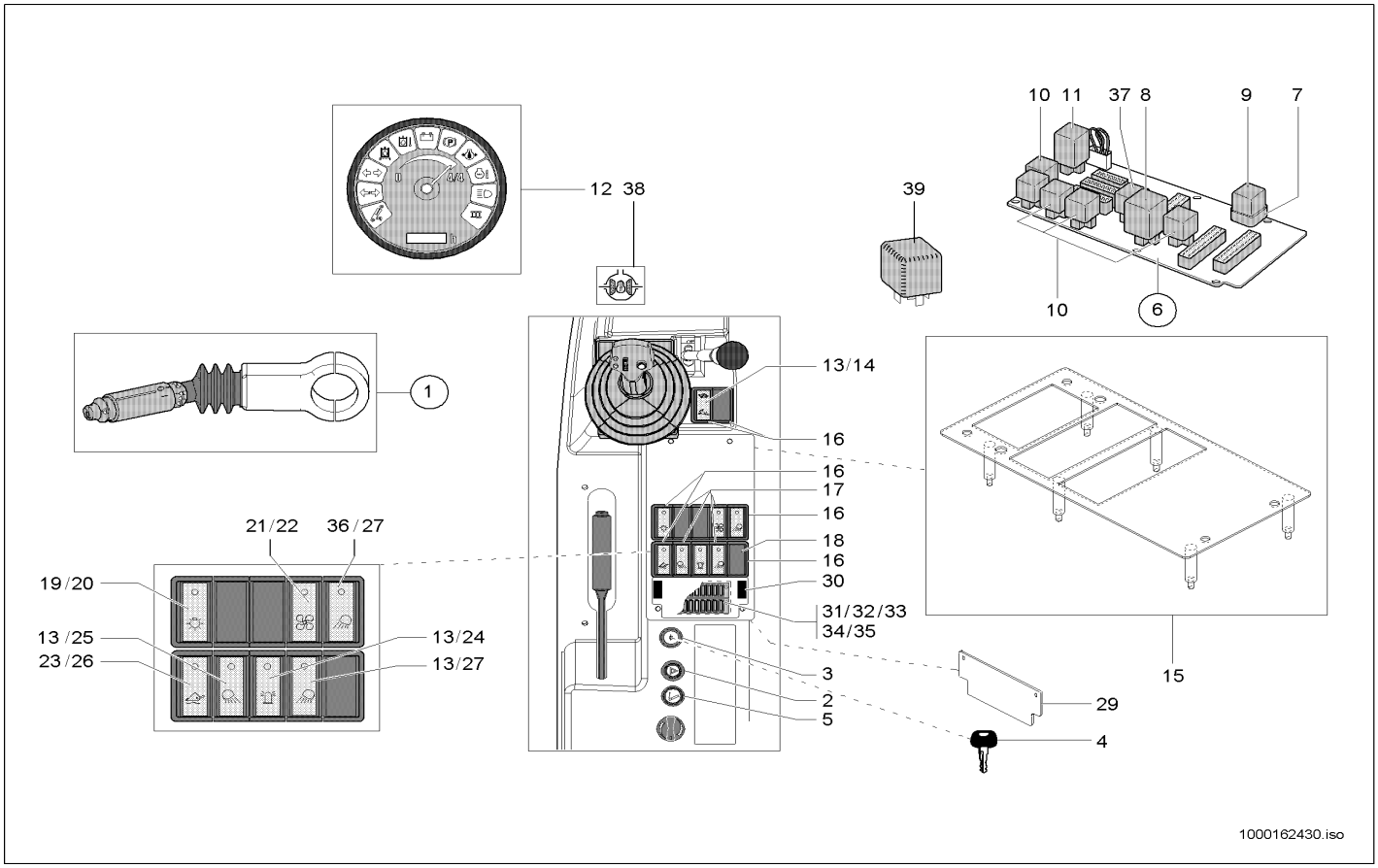


| Pos | Art.-Nr. | Anm. | Q'TY | BEZEICHNUNG | PART NAME | DESIGNATION |
|---|---|---|---|---|---|---|
| 1 | 1000105182 | | 1,00 ST | LENKSTOCKSCHALTER | STEERINGSTICK SWITCH | INTERRUPTEUR DE BÂTON DE DIRECTIC |
| 2 | 1000027198 | | 1,00 ST | SCHALTER WARNBLINKANLAGE | SWITCH HAZARD WARNING DEV. | INTERRUPTEUR SYSTÈME FEUX DÉTRESSE |
| 3 | 1000125516 | | 1,00 ST | GLÜHSTARTSCHALTER | GLOW START SWITCH | COMMUATEUR DE DÉPART DE RÉCHAUFFAGE |
| 4 | 1000000459 | | 1,00 ST | SCHLÜSSEL | KEY | CLÉ |
| 5 | 1000098285 | | 1,00 ST | ZIGARETTENANZÜNDER | CIGARET LIGHTER | ALLUME FEUX |
| 6 | 1000051972 | | 1,00 ST | PLATINE | PLATINE | PLATINE |
| 7 | 1000085587 | | 6,00 ST | 6KT-MUTTER | HEXAGON NUT | ÉCROU HEXAGONAL |
| 8 | 1000027088 | | 1,00 ST | ZEITRELAIS | TIME RELAY | RELAIS TEMPORISATEUR |
| 9 | 1000154042 | 70 A | 1,00 ST | RELAIS | RELAY | RELAIS |
| 10 | 1000154043 | 40/60A | 5,00 ST | RELAIS | RELAY | RELAIS |
| 11 | 1000147918 | | 1,00 ST | BLINKRELAIS | RELAY | RELAIS |
| 12 | 1000127393 | | 1,00 ST | ANZEIGEINSTRUMENT | INDICATOR INSTRUMENT | INSTRUMENT D'INDICATION |
| 13 | 1000051959 | | 5,00 ST | KIPPSCHALTER | TILT SWITCH | INTERRUPTEUR À BASCULE |
| 14 | 1000158729 | | 1,00 ST | SYMBOL | SYMBOL | SYMBOLE |
| 15 | 1000133758 | | 1,00 ST | KONSOLE | CONSOLE | CONSOLE |
| 16 | 1000027168 | | 6,00 ST | SCHALTERRAHMEN | SWITCH FRAME | CADRE DE INTERRUPTEUR |
| 17 | 1000027178 | | 6,00 ST | RAHMEN | FRAME | CADRE |
| 18 | 1000027006 | | 9,00 ST | BLINDDECKEL | BLIND COVER | COUVERCLE AVEUGLE |
| 19 | 1000051958 | | 1,00 ST | KIPPSCHALTER | TILT SWITCH | INTERRUPTEUR À BASCULE |
| 20 | 1000115420 | | 1,00 ST | ZUS-EINSATZ | SYMBOL | SYMBOLE |
| 21 | 1000051967 | | 1,00 ST | KIPPSCHALTER | TILT SWITCH | INTERRUPTEUR À BASCULE |
| 22 | 1000052358 | | 1,00 ST | ZUS-EINSATZ | SYMBOL | SYMBOLE |
| 23 | 1000051962 | | 1,00 ST | KIPPSCHALTER | TILT SWITCH | INTERRUPTEUR À BASCULE |
| 24 | 1000052356 | | 1,00 ST | ZUS-EINSATZ | SYMBOL | SYMBOLE |
| 25 | 1000052361 | | 1,00 ST | ZUS-EINSATZ | SYMBOL | SYMBOLE |
| 26 | 1000052377 | | 1,00 ST | ZUS-EINSATZ | SYMBOL | SYMBOLE |
| 27 | 1000096654 | | 1,00 ST | SYMBOL SCHEINWERFER | SYMBOL HEADLIGHT | SYMBOLE DU PHARE |
| 28 | 1000052354 | | 1,00 ST | ZUS-EINSATZ | SYMBOL | SYMBOLE |
| 29 | 1000050978 | | 1,00 ST | ABDECKUNG | COVER | COUVERCLE |
| 30 | 1000051999 | | 2,00 ST | VERSCHLUSS | LOCK | FERMETURE |
| 31 | 1000052490 | C5 | 5,00 ST | FLACHSICHERUNG | LOCK | SÛRETÉ |
| 32 | 1000095374 | 7,5 | 7,00 ST | FLACHSICHERUNG | LOCK | SÛRETÉ |
| 33 | 1000085683 | 15 | 1,00 ST | FLACHSICHERUNG | LOCK | SÛRETÉ |
| 34 | 1000085684 | 20 | 1,00 ST | FLACHSICHERUNG | LOCK | SÛRETÉ |
| 35 | 1000085685 | 25 | 2,00 ST | FLACHSICHERUNG | LOCK | SÛRETÉ |
| 36 | 1000051971 | | 1,00 ST | TASTER | FEELER | PALPEUR |
| 37 | 1000051953 | | 1,00 ST | RELAIS | RELAY | RELAIS |
| 38 | 1000159348 | | 1,00 ST | KONTROLLEUCHTE | TELLTALE | TÉMOIN |
| 39 | 1000125244 | 20/35A | 1,00 ST | RELAIS | RELAY | RELAIS |

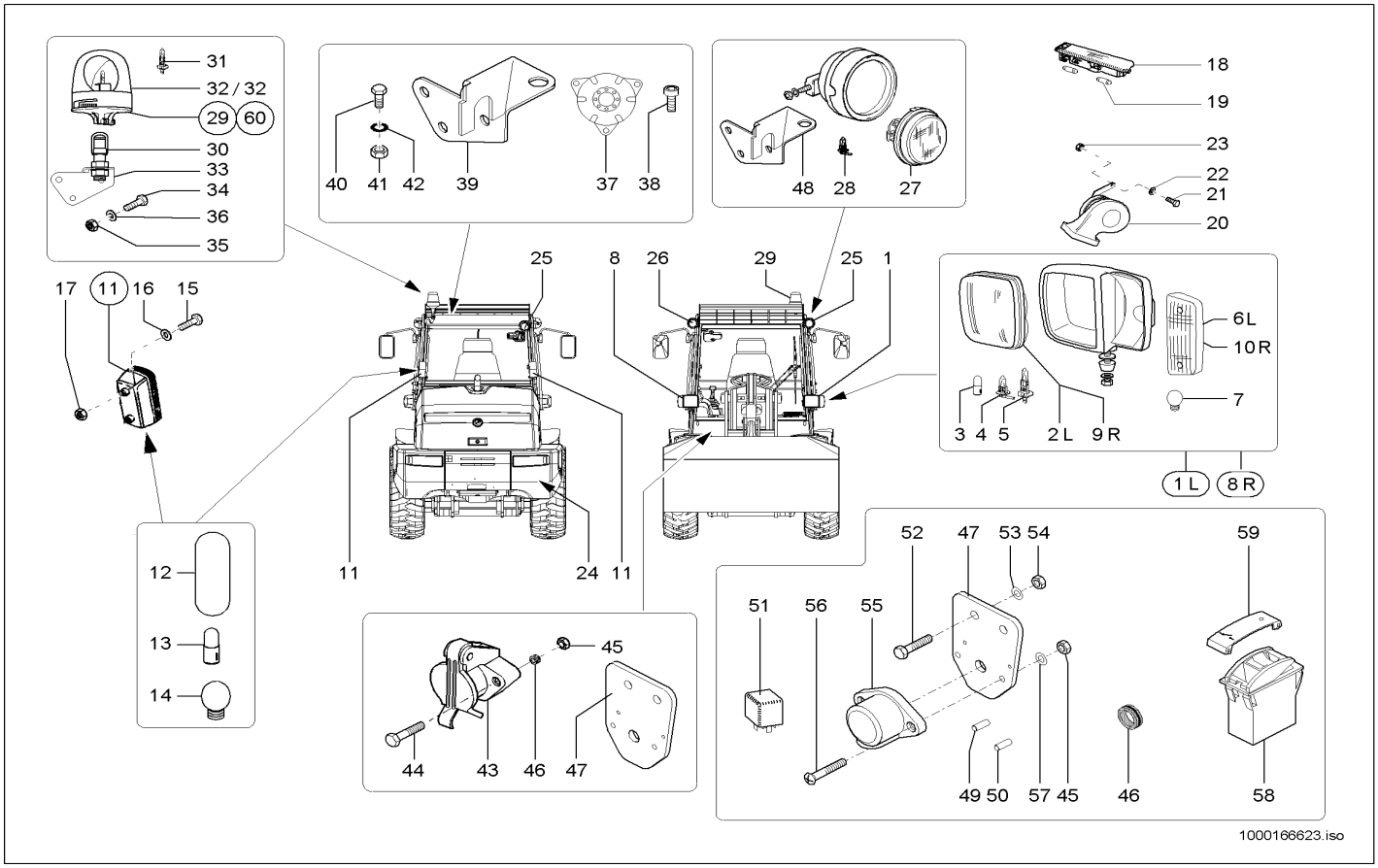


| Pos | Art.-Nr. | Anm. | Q'TY | BEZEICHNUNG | PART NAME | DESIGNATION |
|---|---|---|---|---|---|---|
| 1 | 1000051956 | | 1,00 ST | HAUPTSCHEINWERFER | MAIN HEADLIGHT | PHARE PRINCIPAL |
| 2 | 1000106242 | | 1,00 ST | LICHTSCHEIBE | LIGHT COVER | DISQUE DE LUMIÈRE |
| 3 | 1000001519 | | 1,00 ST | GLÜHLAMPE | BULB | LAMPE À INCANDESCENCE |
| 4 | 1000109711 | | 1,00 ST | GLÜHLAMPE | BULB | LAMPE À INCANDESCENCE |
| 5 | 1000109712 | | 1,00 ST | GLÜHLAMPE | BULB | LAMPE À INCANDESCENCE |
| 6 | 1000106243 | | 1,00 ST | LICHTSCHEIBE | LIGHT COVER | DISQUE DE LUMIÈRE |
| 7 | 1000050449 | | 1,00 ST | GLÜHLAMPE | BULB | LAMPE À INCANDESCENCE |
| 8 | 1000051957 | | 1,00 ST | HAUPTSCHEINWERFER | MAIN HEADLIGHT | PHARE PRINCIPAL |
| 9 | 1000106242 | | 1,00 ST | LICHTSCHEIBE | LIGHT COVER | DISQUE DE LUMIÈRE |
| 10 | 1000106243 | | 1,00 ST | LICHTSCHEIBE | LIGHT COVER | DISQUE DE LUMIÈRE |
| 11 | 1000088085 | | 2,00 ST | SCHLUSSLEUCHTE | REAR LIGHT | FEU ARRIÈRE |
| 12 | 1000088449 | | 2,00 ST | LICHTSCHEIBE | LIGHT COVER | DISQUE DE LUMIÈRE |
| 13 | 1000050449 | | 2,00 ST | GLÜHLAMPE | BULB | LAMPE À INCANDESCENCE |
| 14 | 1000096853 | | 2,00 ST | GLÜHLAMPE | BULB | LAMPE À INCANDESCENCE |
| 15 | 1000052670 | | 4,00 ST | SCHRAUBE | SCREW | VIS |
| 16 | 1000095342 | | 4,00 ST | SCHEIBE | WASHER | RONDELLE |
| 17 | 1000085587 | | 4,00 ST | 6KT-MUTTER | HEXAGON NUT | ÉCROU HEXAGONAL |
| 18 | 1000051952 | | 1,00 ST | INNENLEUCHTE | INTERNAL LIGHT | LUMIÈRE INTÉRIEURE |
| 19 | 1000050446 | | 2,00 ST | GLÜHLAMPE | BULB | LAMPE À INCANDESCENCE |
| 20 | 1000027049 | | 1,00 ST | SIGNALHORN | SIGNAL HORN | CORNE DE SIGNAL |
| 21 | 1000019136 | | 1,00 ST | 6KT-SCHRAUBE | HEX SCREW | VIS À TÊTE HEXAGONALE |
| 22 | 1000095341 | | 1,00 ST | SCHEIBE | WASHER | RONDELLE |
| 23 | 1000013022 | | 1,00 ST | 6KT-MUTTER | HEXAGON NUT | ÉCROU HEXAGONAL |
| 24 | 1000027030 | | 2,00 ST | RÜCKSTRAHLER | REFLECTOR | CATAPHOTE |
| 25 | 1000051955 | L | 2,00 ST | ARBEITSSCHEINWERFER | WORKING LIGHT | RÉFLECTEUR DE TRAVAIL |
| 26 | 1000051954 | R | 1,00 ST | ARBEITSSCHEINWERFER | WORKING LIGHT | RÉFLECTEUR DE TRAVAIL |
| 27 | 1000106679 | | 1,00 ST | SCHEINWERFEREINSATZ | HEADLIGHT INSERT | MISE DE PHARE |
| 28 | 1000106690 | | 1,00 ST | GLÜHLAMPE | BULB | LAMPE À INCANDESCENCE |
| 29 | 1000050452 | A:347010172<br>A:347020034 | 1,00 ST | RUNDUMKENNLEUCHTE | ROTATING BEACON | GYROPHARE CARACTÉRISTIQUE |
| 30 | 1000035475 | | 1,00 ST | SOCKEL | SOCLE | SOCLE |
| 31 | 1000109742 | H1 | 1,00 ST | GLÜHLAMPE | BULB | LAMPE À INCANDESCENCE |
| 32 | 1000128027 | A:347010172<br>A:347020034 | 1,00 ST | HAUBE | ROTATING BEACON A12 GELB H1 | GYROPHARE A12 GELB H1 |
| 33 | 1000148464 | | 1,00 ST | HALTER | BRACKET CLUTCH | SUPPORT |
| 34 | 1000085390 | | 2,00 ST | 6KT-SCHRAUBE | HEX SCREW | VIS À TÊTE HEXAGONALE |
| 35 | 1000013022 | | 2,00 ST | 6KT-MUTTER | HEXAGON NUT | ÉCROU HEXAGONAL |
| 36 | 1000015431 | | 2,00 ST | SCHEIBE | WASHER | RONDELLE |
| 37 | 1000027045 | | 1,00 ST | SIGNALGEBER | SIGNAL SENSOR | TRANSMETTEUR DE SIGNAL |
| 38 | 1000048110 | | 3,00 ST | ZYLINDERSCHRAUBE | CHEESE HEAD SCREW | VIS A TETE CYLINDRIQUE |
| 39 | 1000148464 | | 1,00 ST | HALTER | BRACKET CLUTCH | SUPPORT |
| 40 | 1000085390 | | 2,00 ST | 6KT-SCHRAUBE | HEX SCREW | VIS À TÊTE HEXAGONALE |
| 41 | 1000013022 | | 2,00 ST | 6KT-MUTTER | HEXAGON NUT | ÉCROU HEXAGONAL |
| 42 | 1000015431 | | 2,00 ST | SCHEIBE | WASHER | RONDELLE |
| 43 | 1000050434 | A 4 | 2,00 ST | STECKDOSE | SOCKET | PRISE DE COURANT |
| 44 | 1000048144 | | 2,00 ST | ZYLINDERSCHRAUBE | CHEESE HEAD SCREW | VIS A TETE CYLINDRIQUE |
| 45 | 1000049057 | | 2,00 ST | 6KT-MUTTER | HEXAGON NUT | ÉCROU HEXAGONAL |

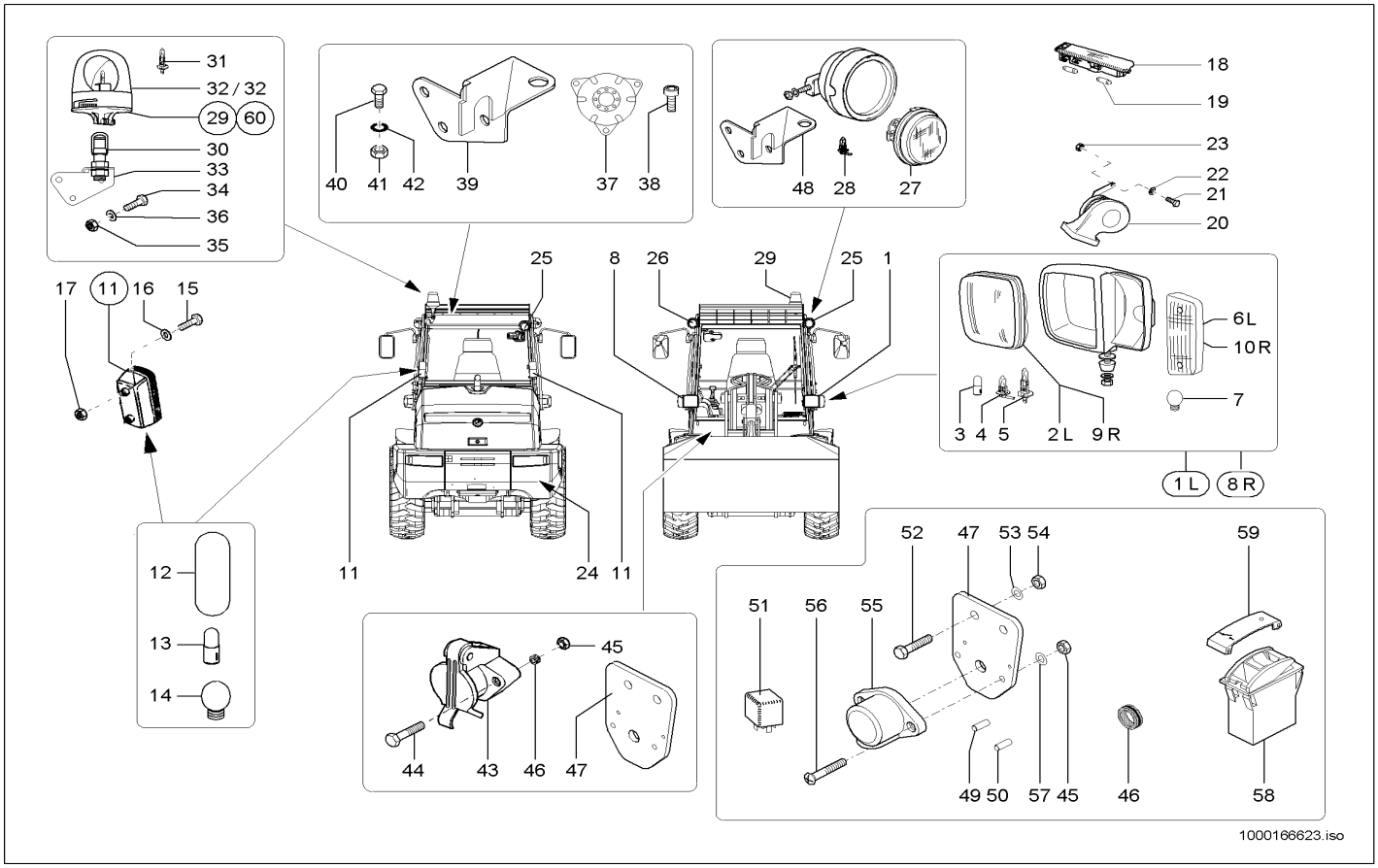


| Pos | Art.-Nr. | Anm. | Q'TY | BEZEICHNUNG | PART NAME | DESIGNATION |
|---|---|---|---|---|---|---|
| 46 | 1000033317 | | 2,00 ST | DURCHFÜHRUNGSRING | JUNCTION | ANNEAU D'APPLICATION |
| 47 | 1000137685 | | 1,00 ST | HALTER | BRACKET CLUTCH | SUPPORT |
| 48 | 1000148464 | | 1,00 ST | HALTER | BRACKET CLUTCH | SUPPORT |
| 49 | 1000051988 | | 3,00 ST | ENDHÜLSE | ENDSLEEVE | DOUILLE FINALE |
| 50 | 1000098962 | | 1,00 ST | ENDHÜLSE | ENDSLEEVE | DOUILLE FINALE |
| 51 | 1000154043 | | 1,00 ST | RELAIS | RELAY | RELAIS |
| 52 | 1000013008 | | 2,00 ST | 6KT-SCHRAUBE | HEX SCREW | VIS À TÊTE HEXAGONALE |
| 53 | 1000015431 | | 2,00 ST | SCHEIBE | WASHER | RONDELLE |
| 54 | 1000013022 | | 2,00 ST | 6KT-MUTTER | HEXAGON NUT | ÉCROU HEXAGONAL |
| 55 | 1000147066 | 2 - polig | 1,00 ST | STECKDOSE | SOCKET | PRISE DE COURANT |
| 56 | 1000101181 | | 2,00 ST | ZYLINDERSCHRAUBE | CHEESE HEAD SCREW | VIS A TETE CYLINDRIQUE |
| 57 | 1000092288 | | 2,00 ST | SCHEIBE | WASHER | RONDELLE |
| 58 | 1000051959 | | 1,00 ST | KIPPSCHALTER | TILT SWITCH | INTERRUPTEUR À BASCULE |
| 59 | 1000052354 | | 1,00 ST | ZUS-EINSATZ | SYMBOL | SYMBOLE |
| 60 | 1000155042 | E:347010173<br>E:347020035 | 1,00 ST | RUNDUMKENNLEUCHTE | ROTATING BEACON | GYROPHARE CARACTÉRISTIQUE |
| 61 | 1000164463 | E:347010173<br>E:347020035 | 1,00 ST | HAUBE | ROTATING BEACON A12 GELB H1 | GYROPHARE A12 GELB H1 |

# BATTERIE-BATTERIEKABEL
# BATTERY - BATTERY CABLE
# CÂBLE DE BATTERIE - BATTERIE

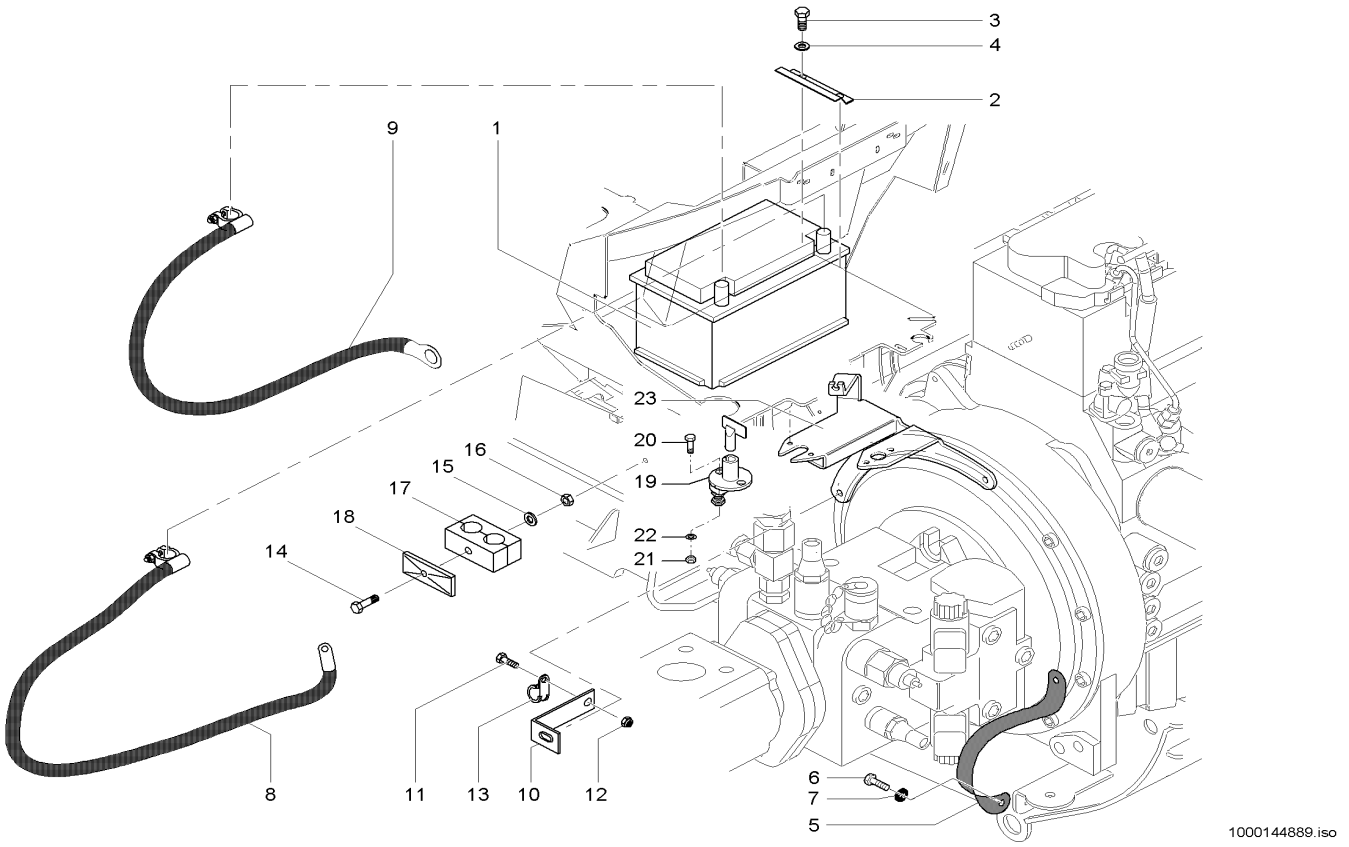


| Pos | Art.-Nr. | Anm. | Q'TY | BEZEICHNUNG | PART NAME | DESIGNATION |
|---|---|---|---|---|---|---|
| 1 | 1000027478 | | 1,00 ST | BATTERIE | BATTERY | BATTERIE |
| 2 | 1000043575 | | 1,00 ST | HALTER | BRACKET CLUTCH | SUPPORT |
| 3 | 1000015343 | | 2,00 ST | 6KT-SCHRAUBE | HEX SCREW | VIS À TÊTE HEXAGONALE |
| 4 | 1000015431 | | 2,00 ST | SCHEIBE | WASHER | RONDELLE |
| 5 | 1000104866 | | 1,00 ST | MASSEBAND | EARTH STRAP | BANDE DE MASSE |
| 6 | 1000085411 | | 1,00 ST | 6KT-SCHRAUBE | HEX SCREW | VIS À TÊTE HEXAGONALE |
| 7 | 1000092291 | | 1,00 ST | SCHEIBE | WASHER | RONDELLE |
| 8 | 1000104867 | | 1,00 ST | BATTERIEKABEL | BATTERY CABLE | CÂBLE DE BATTERIE |
| 9 | 1000104868 | | 1,00 ST | BATTERIEKABEL | BATTERY CABLE | CÂBLE DE BATTERIE |
| 10 | 1000101253 | | 1,00 ST | HALTER | BRACKET CLUTCH | SUPPORT |
| 11 | 1000015343 | | 1,00 ST | 6KT-SCHRAUBE | HEX SCREW | VIS À TÊTE HEXAGONALE |
| 12 | 1000013022 | | 1,00 ST | 6KT-MUTTER | HEXAGON NUT | ÉCROU HEXAGONAL |
| 13 | 1000032103 | | 1,00 ST | SCHELLE | CLAMP | BRIDE |
| 14 | 1000015344 | | 1,00 ST | 6KT-SCHRAUBE | HEX SCREW | VIS À TÊTE HEXAGONALE |
| 15 | 1000015431 | | 1,00 ST | SCHEIBE | WASHER | RONDELLE |
| 16 | 1000013022 | | 1,00 ST | 6KT-MUTTER | HEXAGON NUT | ÉCROU HEXAGONAL |
| 17 | 1000031999 | | 1,00 ST | SCHELLE | CLAMP | BRIDE |
| 18 | 1000031230 | | 1,00 ST | DECKPLATTE | COVER PLATE | PLAQUE DE RECOUVREMENT |
| 19 | 1000027437 | Opt. | 1,00 ST | BATTERIETRENNSCHALTER | SHUT OFF SWITCH | SECTIONNEUR DE BATTERIE |
| 20 | 1000018400 | Opt. | 2,00 ST | 6KT-SCHRAUBE | HEX SCREW | VIS À TÊTE HEXAGONALE |
| 21 | 1000085588 | Opt. | 2,00 ST | 6KT-MUTTER | HEXAGON NUT | ÉCROU HEXAGONAL |
| 22 | 1000092290 | Opt. | 2,00 ST | SCHEIBE | WASHER | RONDELLE |
| 23 | 1000147608 | Opt. | 1,00 ST | HALTER | BRACKET CLUTCH | SUPPORT |

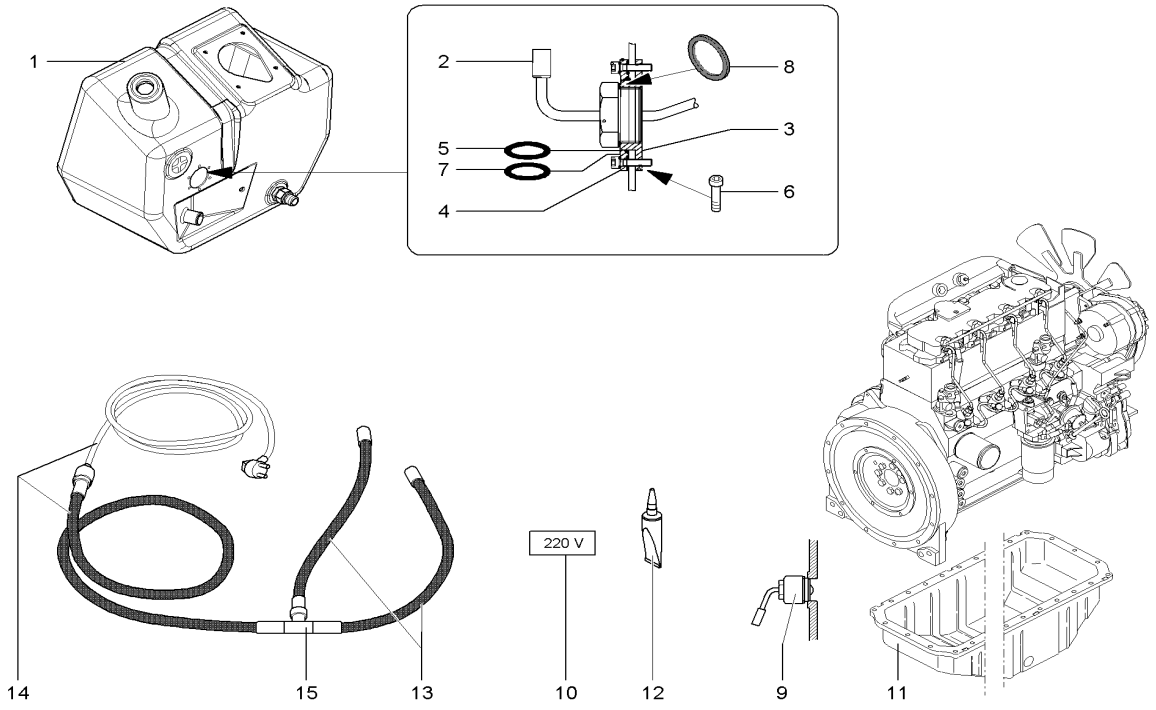


1000160419.iso

| Pos | Art.-Nr. | Anm. | Q'TY | BEZEICHNUNG | PART NAME | DESIGNATION |
|---|---|---|---|---|---|---|
| 1 | 1000100820 | | 1,00 ST | HYDRAULIKTANK | HYDRAULIC TANK | RÉSERVOIR HYDRAULIQUE |
| 2 | 1000038244 | | 1,00 ST | ÖLVORWÄRMER | OIL PRE HEATER | PRÉCHAUFFEUR D'HUILE |
| 3 | 1000035513 | | 1,00 ST | ANSCHLUSSSTÜCK | CONNECTION PIECE | PIÈCE DE CONNEXION |
| 4 | 1000035514 | | 1,00 ST | FLANSCH | FLANGE | BRIDE |
| 5 | 1000033469 | | 1,00 ST | O-RING | O-RING | ANNEAU EN O |
| 6 | 1000085457 | | 6,00 ST | ZYLINDERSCHRAUBE | CHEESE HEAD SCREW | VIS A TETE CYLINDRIQUE |
| 7 | 1000090433 | | 1,00 ST | O-RING | O-RING | ANNEAU EN O |
| 8 | 1000085673 | | 1,00 ST | DICHTRING | SEAL RING | BAGUE D'ÉTANCHÉITÉ |
| 9 | 1000036896 | | 1,00 ST | ÖLVORWÄRMER | OIL PRE HEATER | PRÉCHAUFFEUR D'HUILE |
| 10 | 1000029814 | | 1,00 ST | SCHILD | LABEL | PANNEAU |
| 11 | 1000100809 | | 1,00 ST | ÖLWANNE | OIL SUMP | CARTER D'HUILE |
| 12 | 1000086437 | | 1,00 ST | DICHTUNGSMASSE | SEALING COMPOUND | MASTIC À JOINT |
| 13 | 1000038425 | | 2,00 ST | KABEL | CABLE | CÂBLE |
| 14 | 1000038423 | | 1,00 ST | KABELBAUM | WIRING HARNESS | ARBRE DE CÂBLE |
| 15 | 1000027171 | | 1,00 ST | KONTAKT | CONTACT | CONTACT |

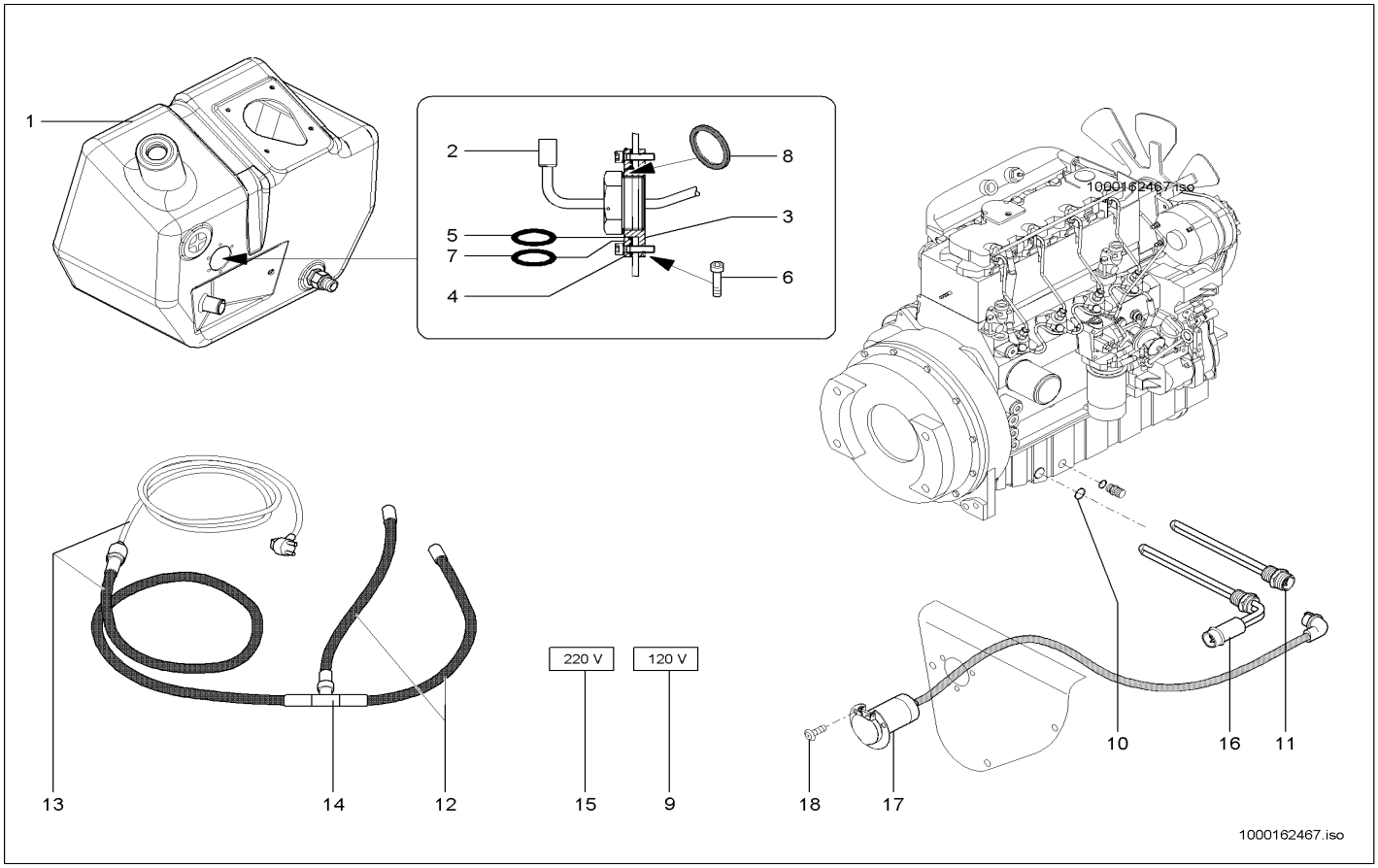


| Pos | Art.-Nr. | Anm. | Q'TY | BEZEICHNUNG | PART NAME | DESIGNATION |
|---|---|---|---|---|---|---|
| 1 | 1000100820 | | 1,00 ST | HYDRAULIKTANK | HYDRAULIC TANK | RÉSERVOIR HYDRAULIQUE |
| 2 | 1000038244 | | 1,00 ST | ÖLVORWÄRMER | OIL PRE HEATER | PRÉCHAUFFEUR D'HUILE |
| 3 | 1000035513 | | 1,00 ST | ANSCHLUSSSTÜCK | CONNECTION PIECE | PIÈCE DE CONNEXION |
| 4 | 1000035514 | | 1,00 ST | FLANSCH | FLANGE | BRIDE |
| 5 | 1000033469 | | 1,00 ST | O-RING | O-RING | ANNEAU EN O |
| 6 | 1000085457 | | 6,00 ST | ZYLINDERSCHRAUBE | CHEESE HEAD SCREW | VIS A TETE CYLINDRIQUE |
| 7 | 1000090433 | | 1,00 ST | O-RING | O-RING | ANNEAU EN O |
| 8 | 1000085673 | | 1,00 ST | DICHTRING | SEAL RING | BAGUE D'ÉTANCHÉITÉ |
| 9 | 1000168612 | | 1,00 ST | SCHILD | LABEL | PANNEAU |
| 10 | 1000013057 | | 1,00 ST | DICHTRING | SEAL RING | BAGUE D'ÉTANCHÉITÉ |
| 11 | 1000159637 | 220V | 1,00 ST | ÖLVORWÄRMER | OIL PRE HEATER | PRÉCHAUFFEUR D'HUILE |
| 12 | 1000038425 | | 2,00 ST | KABEL | CABLE | CÂBLE |
| 13 | 1000038423 | | 1,00 ST | KABELBAUM | WIRING HARNESS | ARBRE DE CÂBLE |
| 14 | 1000027171 | | 1,00 ST | KONTAKT | CONTACT | CONTACT |
| 15 | 1000029814 | | 1,00 ST | SCHILD | LABEL | PANNEAU |
| 16 | 1000168628 | 120V | 1,00 ST | MOTORVORWÄRMER | ENGINE PREHEATER | PRÉCHAUFFEUR DE MOTEUR |
| 17 | 1000168633 | | 1,00 ST | STECKDOSE | SOCKET | PRISE DE COURANT |
| 18 | 1000098708 | | 3,00 ST | SCHRAUBE | SCREW | VIS |

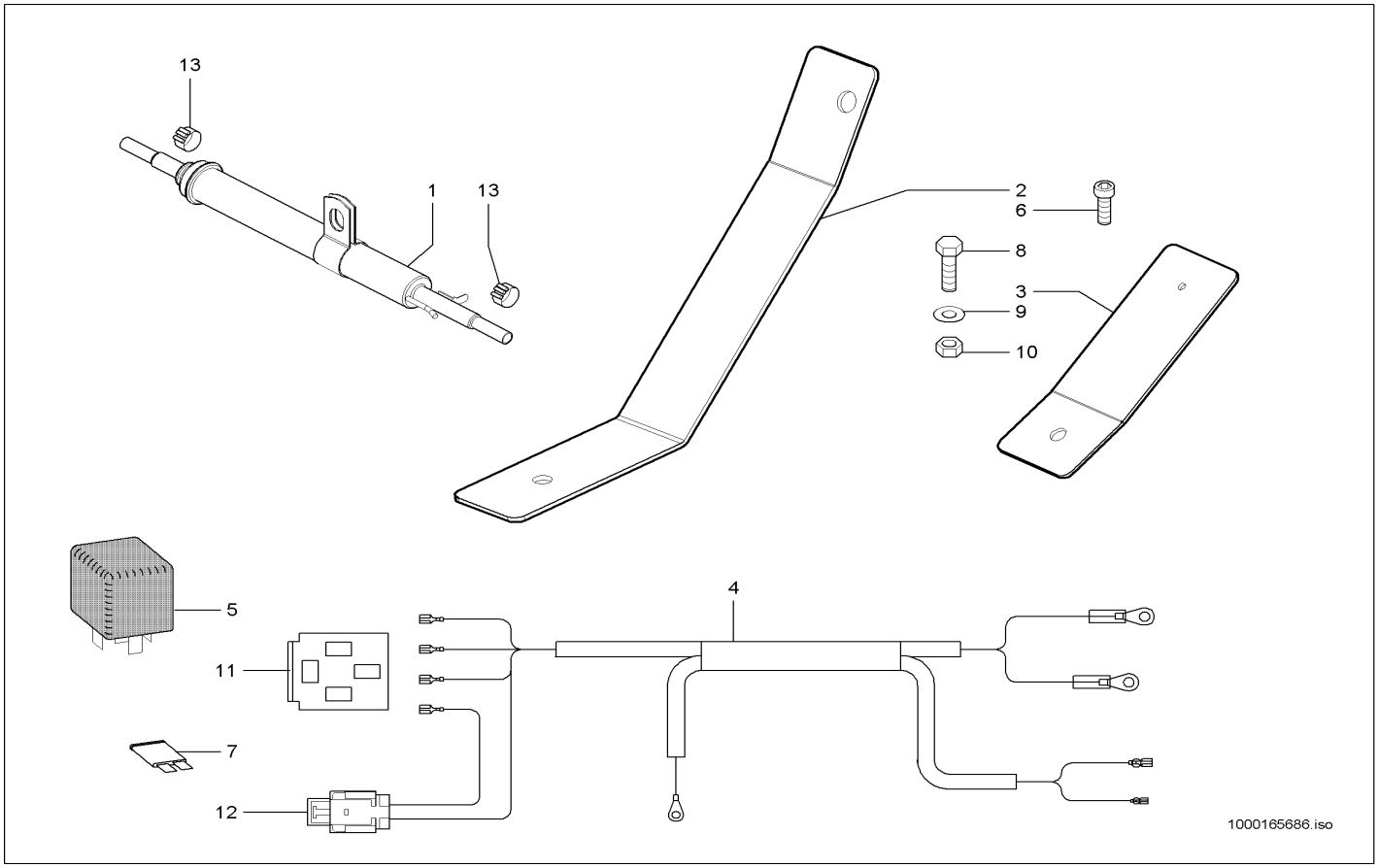


| Pos | Art.-Nr. | Anm. | Q'TY | BEZEICHNUNG | PART NAME | DESIGNATION |
|---|---|---|---|---|---|---|
| 1 | 1000036682 | | 1,00 ST | KRAFTSTOFFVORWÄRMER | FUEL PRE HEATER | PRÉCHAUFFEUR DE CARBURANT |
| 2 | 1000165090 | | 1,00 ST | WINKEL | ANGLE | ANGLE |
| 3 | 1000165101 | | 1,00 ST | HALTER | BRACKET CLUTCH | SUPPORT |
| 4 | 1000164949 | | 1,00 ST | KABELBAUM | WIRING HARNESS | ARBRE DE CÂBLE |
| 5 | 1000154043 | 40/60 A | 1,00 ST | RELAIS | RELAY | RELAIS |
| 6 | 1000098708 | M5x10 | 1,00 ST | SCHRAUBE | SCREW | VIS |
| 7 | 1000085683 | 15 A | 1,00 ST | FLACHSICHERUNG | LOCK | SÛRETÉ |
| 8 | 1000015345 | M10x25 | 1,00 ST | 6KT-SCHRAUBE | HEX SCREW | VIS À TÊTE HEXAGONALE |
| 9 | 1000092293 | | 1,00 ST | SCHEIBE | WASHER | RONDELLE |
| 10 | 1000015407 | M10 | 1,00 ST | 6KT-MUTTER | HEXAGON NUT | ÉCROU HEXAGONAL |
| 11 | 1000135648 | | 1,00 ST | STECKERGEHÄUSE | PLUG HOUSING | BOÎTE DE BOUCHON |
| 12 | 1000104418 | | 1,00 ST | SICHERUNGSHALTER | FUSE HOLDER | SUPPORT DE SÉCURITÉ |
| 13 | 1000032118 | | 2,00 ST | SCHELLE | CLAMP | BRIDE |

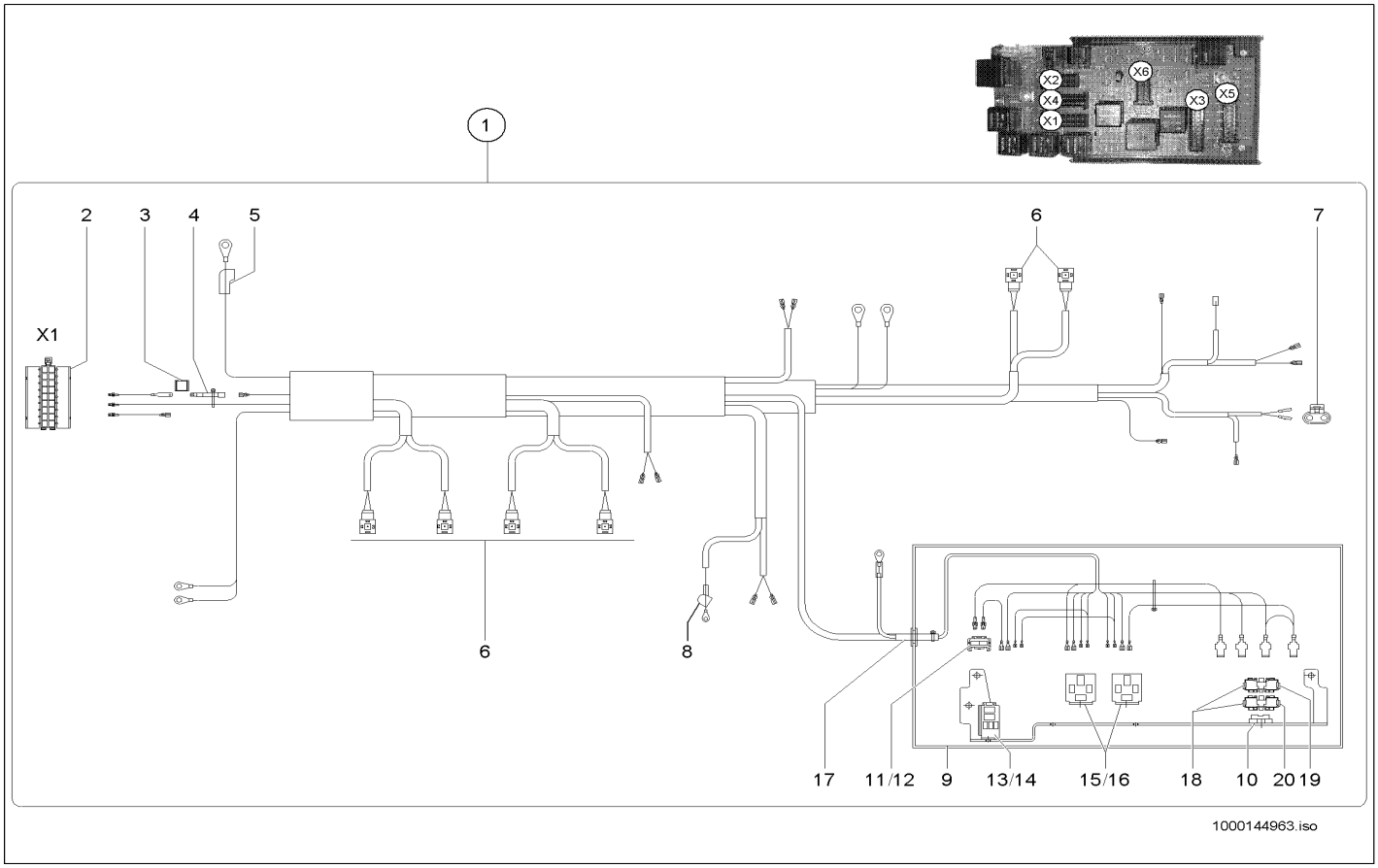


| Pos | Art.-Nr. | Anm. | Q'TY | BEZEICHNUNG | PART NAME | DESIGNATION |
|---|---|---|---|---|---|---|
| 1 | 1000133939 | | 1,00 ST | KABELBAUM | WIRING HARNESS | ARBRE DE CÂBLE |
| 2 | 1000100972 | | 1,00 ST | BUCHSENGEHÄUSE | BUSHING HOUSING | BOÎTE DE BAGUE |
| 3 | 1000085008 | | 2,00 ST | FLACHSTECKERGEHÄUSE | PLUG HOUSING | BOÎTE DE BOUCHON |
| 4 | 1000100594 | | 1,00 ST | SPERRDIODE | BLOCK DIODE | DIODE SUPPRESSEUSE |
| 5 | 1000098966 | | 1,00 ST | SCHUTZKAPPE | PROTECTING CAP | CAPOT DE PROTECTION |
| 6 | 1000000455 | | 6,00 ST | GERÄTESTECKER | PLUG | BOUCHON |
| 7 | 1000110449 | | 1,00 ST | STECKER | PLUG | BOUCHON |
| 8 | 1000027463 | | 1,00 ST | SCHUTZKAPPE | PROTECTING CAP | CAPOT DE PROTECTION |
| 9 | 1000051983 | | 1,00 ST | GEHÄUSE | HOUSING | BOÎTE |
| 10 | 1000027144 | | 1,00 ST | BEFESTIGUNGSLASCHE | FIXING BRACKET | BIELLE DE FIXATION |
| 11 | 1000114137 | | 1,00 ST | SICHERUNGSHALTER | FUSE HOLDER | SUPPORT DE SÉCURITÉ |
| 12 | 1000114140 | 10 A | 1,00 ST | FLACHSICHERUNG | LOCK | SÛRETÉ |
| 13 | 1000114134 | | 1,00 ST | SOCKEL | SOCLE | SOCLE |
| 14 | 1000027080 | 10/20A | 1,00 ST | RELAIS | RELAY | RELAIS |
| 15 | 1000026997 | | 2,00 ST | SOCKEL | SOCLE | SOCLE |
| 16 | 1000154042 | 70A | 2,00 ST | RELAIS | RELAY | RELAIS |
| 17 | 1000100642 | | 1,00 ST | TÜLLE | SLEEVE | BEC |
| 18 | 1000027186 | | 2,00 ST | HALTER | BRACKET CLUTCH | SUPPORT |
| 19 | 1000027321 | 80 A | 1,00 ST | FLACHSICHERUNG | LOCK | SÛRETÉ |
| 20 | 1000015302 | 40 A | 1,00 ST | FLACHSICHERUNG | LOCK | SÛRETÉ |

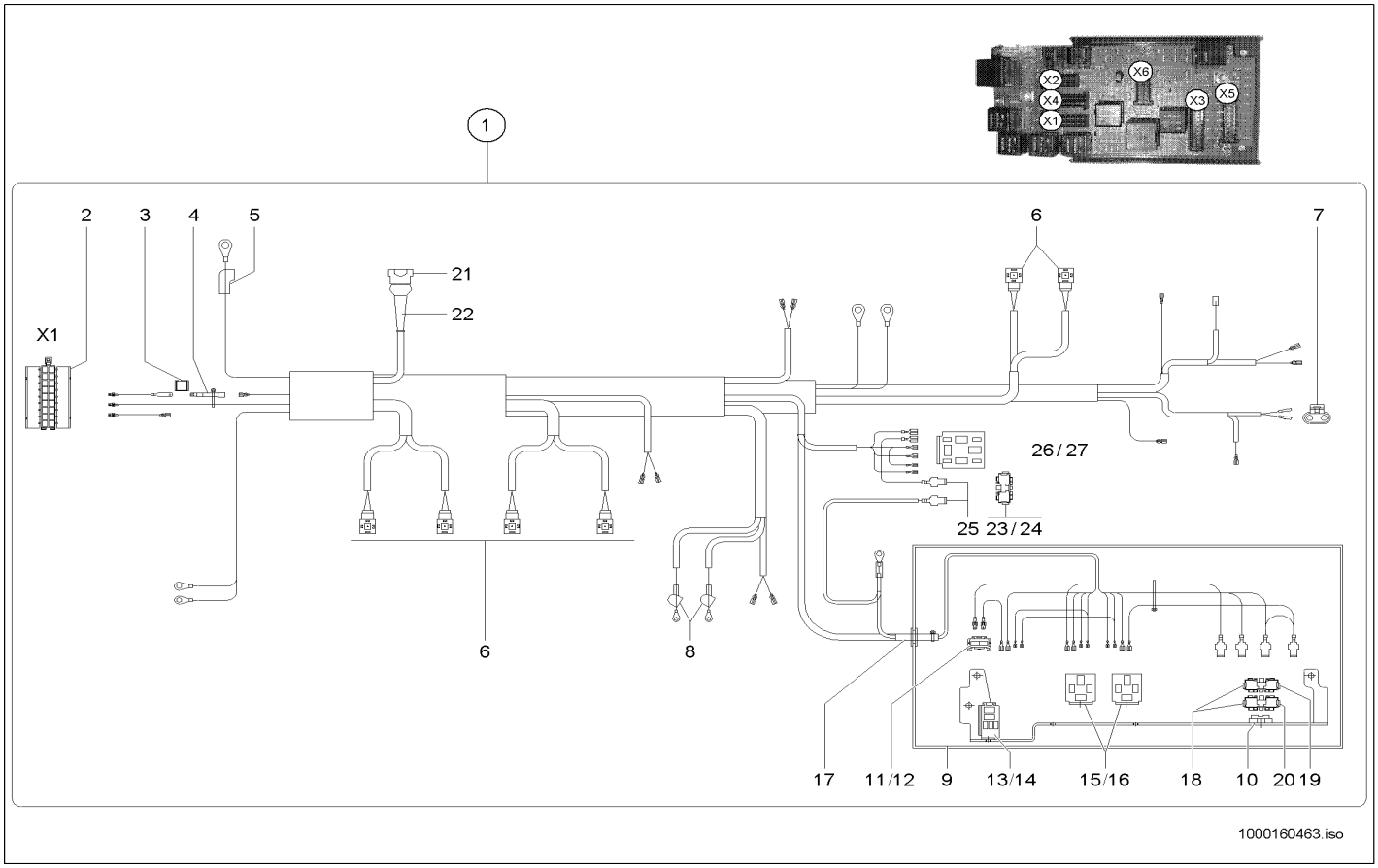


| Pos | Art.-Nr. | Anm. | Q'TY | BEZEICHNUNG | PART NAME | DESIGNATION |
|---|---|---|---|---|---|---|
| 1 | 1000155835 | | 1,00 ST | KABELBAUM | WIRING HARNESS | ARBRE DE CÂBLE |
| 2 | 1000100972 | | 1,00 ST | BUCHSENGEHÄUSE | BUSHING HOUSING | BOÎTE DE BAGUE |
| 3 | 1000085008 | | 1,00 ST | FLACHSTECKERGEHÄUSE | PLUG HOUSING | BOÎTE DE BOUCHON |
| 4 | 1000100594 | | 1,00 ST | SPERRDIODE | BLOCK DIODE | DIODE SUPPRESSEUSE |
| 5 | 1000098966 | | 1,00 ST | SCHUTZKAPPE | PROTECTING CAP | CAPOT DE PROTECTION |
| 6 | 1000000455 | | 6,00 ST | GERÄTESTECKER | PLUG | BOUCHON |
| 7 | 1000110449 | | 1,00 ST | STECKER | PLUG | BOUCHON |
| 8 | 1000027463 | | 2,00 ST | SCHUTZKAPPE | PROTECTING CAP | CAPOT DE PROTECTION |
| 9 | 1000051983 | | 1,00 ST | GEHÄUSE | HOUSING | BOÎTE |
| 10 | 1000027144 | | 1,00 ST | BEFESTIGUNGSLASCHE | FIXING BRACKET | BIELLE DE FIXATION |
| 11 | 1000114137 | | 1,00 ST | SICHERUNGSHALTER | FUSE HOLDER | SUPPORT DE SÉCURITÉ |
| 12 | 1000114140 | 10 A | 1,00 ST | FLACHSICHERUNG | LOCK | SÛRETÉ |
| 13 | 1000114134 | | 1,00 ST | SOCKEL | SOCLE | SOCLE |
| 14 | 1000027080 | 10/20A | 1,00 ST | RELAIS | RELAY | RELAIS |
| 15 | 1000026997 | | 2,00 ST | SOCKEL | SOCLE | SOCLE |
| 16 | 1000154042 | 70A | 2,00 ST | RELAIS | RELAY | RELAIS |
| 17 | 1000100642 | | 1,00 ST | TÜLLE | SLEEVE | BEC |
| 18 | 1000027186 | | 2,00 ST | HALTER | BRACKET CLUTCH | SUPPORT |
| 19 | 1000027321 | 80 A | 1,00 ST | FLACHSICHERUNG | LOCK | SÛRETÉ |
| 20 | 1000015302 | 40 A | 1,00 ST | FLACHSICHERUNG | LOCK | SÛRETÉ |
| 21 | 1000027359 | | 1,00 ST | STECKERGEHÄUSE | PLUG HOUSING | BOÎTE DE BOUCHON |
| 22 | 1000027466 | | 1,00 ST | SCHUTZKAPPE | PROTECTING CAP | CAPOT DE PROTECTION |
| 23 | 1000155563 | | 1,00 ST | SICHERUNGSHALTER | FUSE HOLDER | SUPPORT DE SÉCURITÉ |
| 24 | 1000015298 | | 1,00 ST | FLACHSICHERUNG | LOCK | SÛRETÉ |
| 25 | 1000085003 | | 2,00 ST | STECKHÜLSE | PLUG SLEEVE | DOUILLE DE COURANT |
| 26 | 1000026997 | | 1,00 ST | SOCKEL | SOCLE | SOCLE |
| 27 | 1000155720 | | 1,00 ST | ZEITSCHALTRELAIS | TIME CONTACTOR | CONJONCTEUR DE TEMPS |

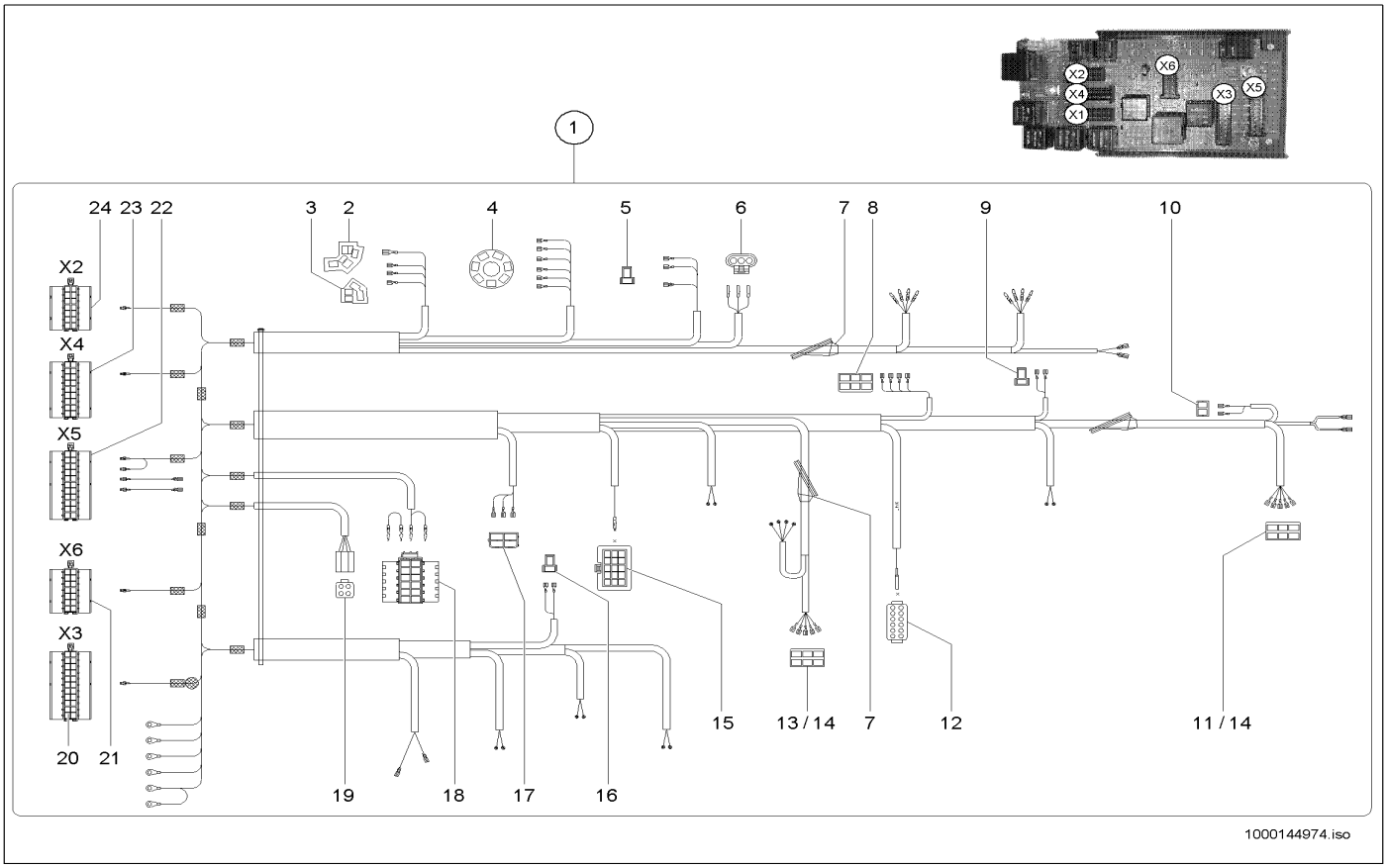


| Pos | Art.-Nr. | Anm. | Q'TY | BEZEICHNUNG | PART NAME | DESIGNATION |
|---|---|---|---|---|---|---|
| 1 | 1000133940 | | 1,00 ST | KABELBAUM | WIRING HARNESS | ARBRE DE CÂBLE |
| 2 | 1000027386 | | 1,00 ST | ZENTRALSTECKER | CENTRAL PLUG | BOUCHON CENTRALE |
| 3 | 1000027368 | | 1,00 ST | ZENTRALSTECKER | CENTRAL PLUG | BOUCHON CENTRALE |
| 4 | 1000104430 | | 1,00 ST | STECKERGEHÄUSE | PLUG HOUSING | BOÎTE DE BOUCHON |
| 5 | 1000095323 | | 1,00 ST | STECKHÜLSENGEHÄUSE | PLUG SLEEVE HOUSING | BOÎTE À DOUILLES DE BOUCHON |
| 6 | 1000051989 | | 1,00 ST | BUCHSENGEHÄUSE | BUSHING HOUSING | BOÎTE DE BAGUE |
| 7 | 1000133832 | | 3,00 ST | DURCHFÜHRUNGSRING | DUCT RING | BAGUE DE PASSAGE |
| 8 | 1000095337 | | 1,00 ST | STECKHÜLSENGEHÄUSE | PLUG SLEEVE HOUSING | BOÎTE À DOUILLES DE BOUCHON |
| 9 | 1000095323 | | 1,00 ST | STECKHÜLSENGEHÄUSE | PLUG SLEEVE HOUSING | BOÎTE À DOUILLES DE BOUCHON |
| 10 | 1000095336 | | 1,00 ST | STECKHÜLSENGEHÄUSE | PLUG SLEEVE HOUSING | BOÎTE À DOUILLES DE BOUCHON |
| 11 | 1000095337 | | 1,00 ST | STECKHÜLSENGEHÄUSE | PLUG SLEEVE HOUSING | BOÎTE À DOUILLES DE BOUCHON |
| 12 | 1000105121 | | 1,00 ST | BUCHSENGEHÄUSE | BUSHING HOUSING | BOÎTE DE BAGUE |
| 13 | 1000095337 | | 1,00 ST | STECKHÜLSENGEHÄUSE | PLUG SLEEVE HOUSING | BOÎTE À DOUILLES DE BOUCHON |
| 14 | 1000096652 | | 2,00 ST | GUMMIKAPPE | RUBBER CAP | BONNET EN CAOUTCHOUC |
| 15 | 1000104663 | | 1,00 ST | STIFTGEHÄUSE | PIN HOUSING | BOÎTE À BROCHES |
| 16 | 1000095323 | | 1,00 ST | STECKHÜLSENGEHÄUSE | PLUG SLEEVE HOUSING | BOÎTE À DOUILLES DE BOUCHON |
| 17 | 1000095325 | | 1,00 ST | STECKHÜLSENGEHÄUSE | PLUG SLEEVE HOUSING | BOÎTE À DOUILLES DE BOUCHON |
| 18 | 1000103949 | | 1,00 ST | BUCHSENGEHÄUSE | BUSHING HOUSING | BOÎTE DE BAGUE |
| 19 | 1000104286 | | 1,00 ST | BUCHSENGEHÄUSE | BUSHING HOUSING | BOÎTE DE BAGUE |
| 20 | 1000100973 | | 1,00 ST | BUCHSENGEHÄUSE | BUSHING HOUSING | BOÎTE DE BAGUE |
| 21 | 1000100971 | | 1,00 ST | BUCHSENGEHÄUSE | BUSHING HOUSING | BOÎTE DE BAGUE |
| 22 | 1000104433 | | 1,00 ST | BUCHSENGEHÄUSE | BUSHING HOUSING | BOÎTE DE BAGUE |
| 23 | 1000104432 | | 1,00 ST | BUCHSENGEHÄUSE | BUSHING HOUSING | BOÎTE DE BAGUE |
| 24 | 1000100971 | | 1,00 ST | BUCHSENGEHÄUSE | BUSHING HOUSING | BOÎTE DE BAGUE |

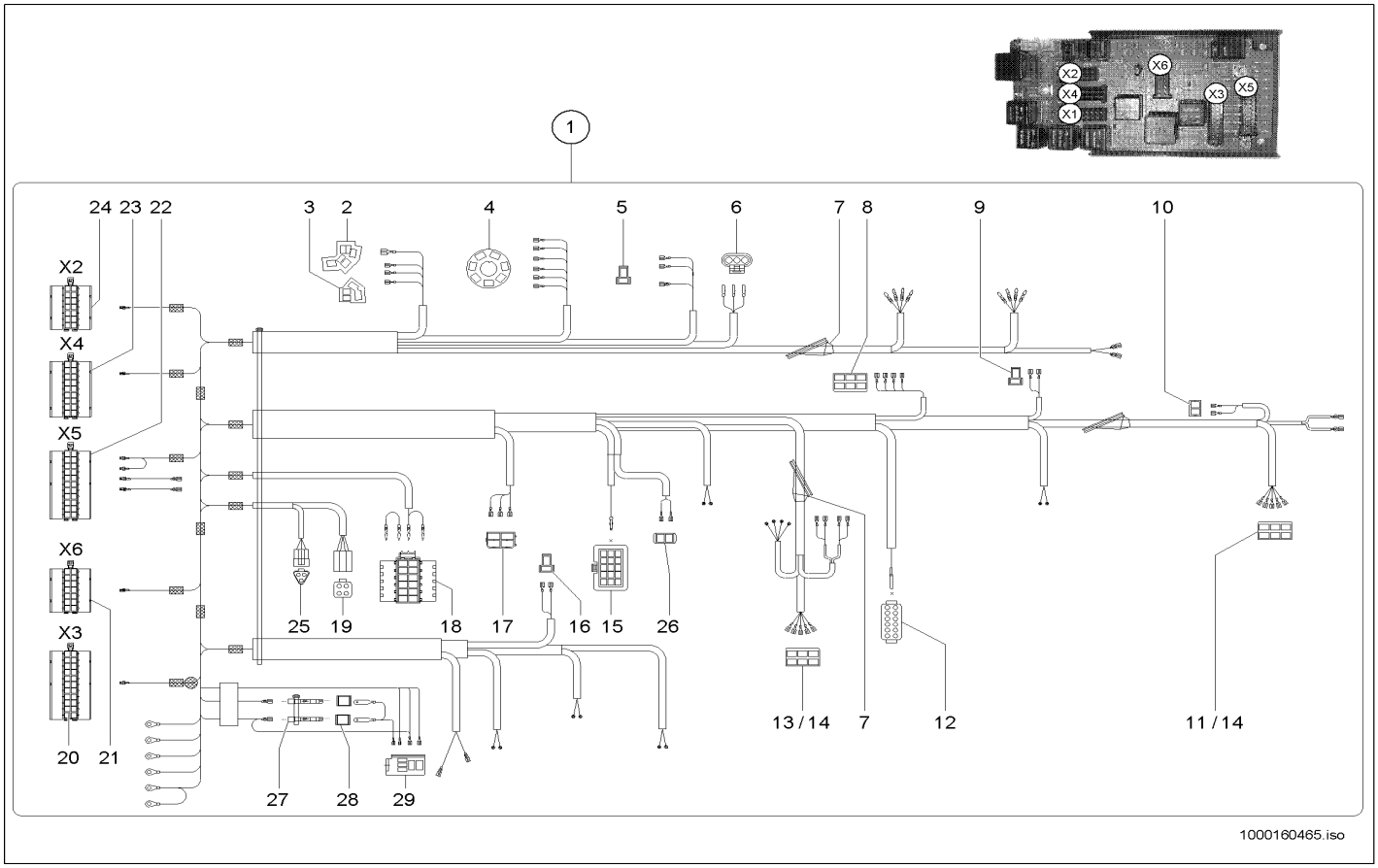


| Pos | Art.-Nr. | Anm. | Q'TY | BEZEICHNUNG | PART NAME | DESIGNATION |
|---|---|---|---|---|---|---|
| 1 | 1000159153 | | 1,00 ST | KABELBAUM | WIRING HARNESS | ARBRE DE CÂBLE |
| 2 | 1000027386 | | 1,00 ST | ZENTRALSTECKER | CENTRAL PLUG | BOUCHON CENTRALE |
| 3 | 1000027368 | | 1,00 ST | ZENTRALSTECKER | CENTRAL PLUG | BOUCHON CENTRALE |
| 4 | 1000104430 | | 1,00 ST | STECKERGEHÄUSE | PLUG HOUSING | BOÎTE DE BOUCHON |
| 5 | 1000095323 | | 1,00 ST | STECKHÜLSENGEHÄUSE | PLUG SLEEVE HOUSING | BOÎTE À DOUILLES DE BOUCHON |
| 6 | 1000051989 | | 1,00 ST | BUCHSENGEHÄUSE | BUSHING HOUSING | BOÎTE DE BAGUE |
| 7 | 1000133832 | | 3,00 ST | DURCHFÜHRUNGSRING | DUCT RING | BAGUE DE PASSAGE |
| 8 | 1000095337 | | 1,00 ST | STECKHÜLSENGEHÄUSE | PLUG SLEEVE HOUSING | BOÎTE À DOUILLES DE BOUCHON |
| 9 | 1000095323 | | 1,00 ST | STECKHÜLSENGEHÄUSE | PLUG SLEEVE HOUSING | BOÎTE À DOUILLES DE BOUCHON |
| 10 | 1000095336 | | 1,00 ST | STECKHÜLSENGEHÄUSE | PLUG SLEEVE HOUSING | BOÎTE À DOUILLES DE BOUCHON |
| 11 | 1000095337 | | 1,00 ST | STECKHÜLSENGEHÄUSE | PLUG SLEEVE HOUSING | BOÎTE À DOUILLES DE BOUCHON |
| 12 | 1000105121 | | 1,00 ST | BUCHSENGEHÄUSE | BUSHING HOUSING | BOÎTE DE BAGUE |
| 13 | 1000095337 | | 1,00 ST | STECKHÜLSENGEHÄUSE | PLUG SLEEVE HOUSING | BOÎTE À DOUILLES DE BOUCHON |
| 14 | 1000096652 | | 2,00 ST | GUMMIKAPPE | RUBBER CAP | BONNET EN CAOUTCHOUC |
| 15 | 1000104663 | | 1,00 ST | STIFTGEHÄUSE | PIN HOUSING | BOÎTE À BROCHES |
| 16 | 1000095323 | | 1,00 ST | STECKHÜLSENGEHÄUSE | PLUG SLEEVE HOUSING | BOÎTE À DOUILLES DE BOUCHON |
| 17 | 1000095325 | | 1,00 ST | STECKHÜLSENGEHÄUSE | PLUG SLEEVE HOUSING | BOÎTE À DOUILLES DE BOUCHON |
| 18 | 1000103949 | | 1,00 ST | BUCHSENGEHÄUSE | BUSHING HOUSING | BOÎTE DE BAGUE |
| 19 | 1000104286 | | 1,00 ST | BUCHSENGEHÄUSE | BUSHING HOUSING | BOÎTE DE BAGUE |
| 20 | 1000100973 | | 1,00 ST | BUCHSENGEHÄUSE | BUSHING HOUSING | BOÎTE DE BAGUE |
| 21 | 1000100971 | | 1,00 ST | BUCHSENGEHÄUSE | BUSHING HOUSING | BOÎTE DE BAGUE |
| 22 | 1000104433 | | 1,00 ST | BUCHSENGEHÄUSE | BUSHING HOUSING | BOÎTE DE BAGUE |
| 23 | 1000104432 | | 1,00 ST | BUCHSENGEHÄUSE | BUSHING HOUSING | BOÎTE DE BAGUE |
| 24 | 1000100971 | | 1,00 ST | BUCHSENGEHÄUSE | BUSHING HOUSING | BOÎTE DE BAGUE |
| 25 | 1000027429 | | 1,00 ST | GEHÄUSE | HOUSING | BOÎTE |
| 26 | 1000027357 | | 1,00 ST | STECKHÜLSENGEHÄUSE | PLUG SLEEVE HOUSING | BOÎTE À DOUILLES DE BOUCHON |
| 27 | 1000100594 | | 2,00 ST | SPERRDIODE | BLOCK DIODE | DIODE SUPPRESSEUSE |
| 28 | 1000085008 | | 2,00 ST | FLACHSTECKERGEHÄUSE | PLUG HOUSING | BOÎTE DE BOUCHON |
| 29 | 1000100593 | | 1,00 ST | SOCKEL | SOCLE | SOCLE |

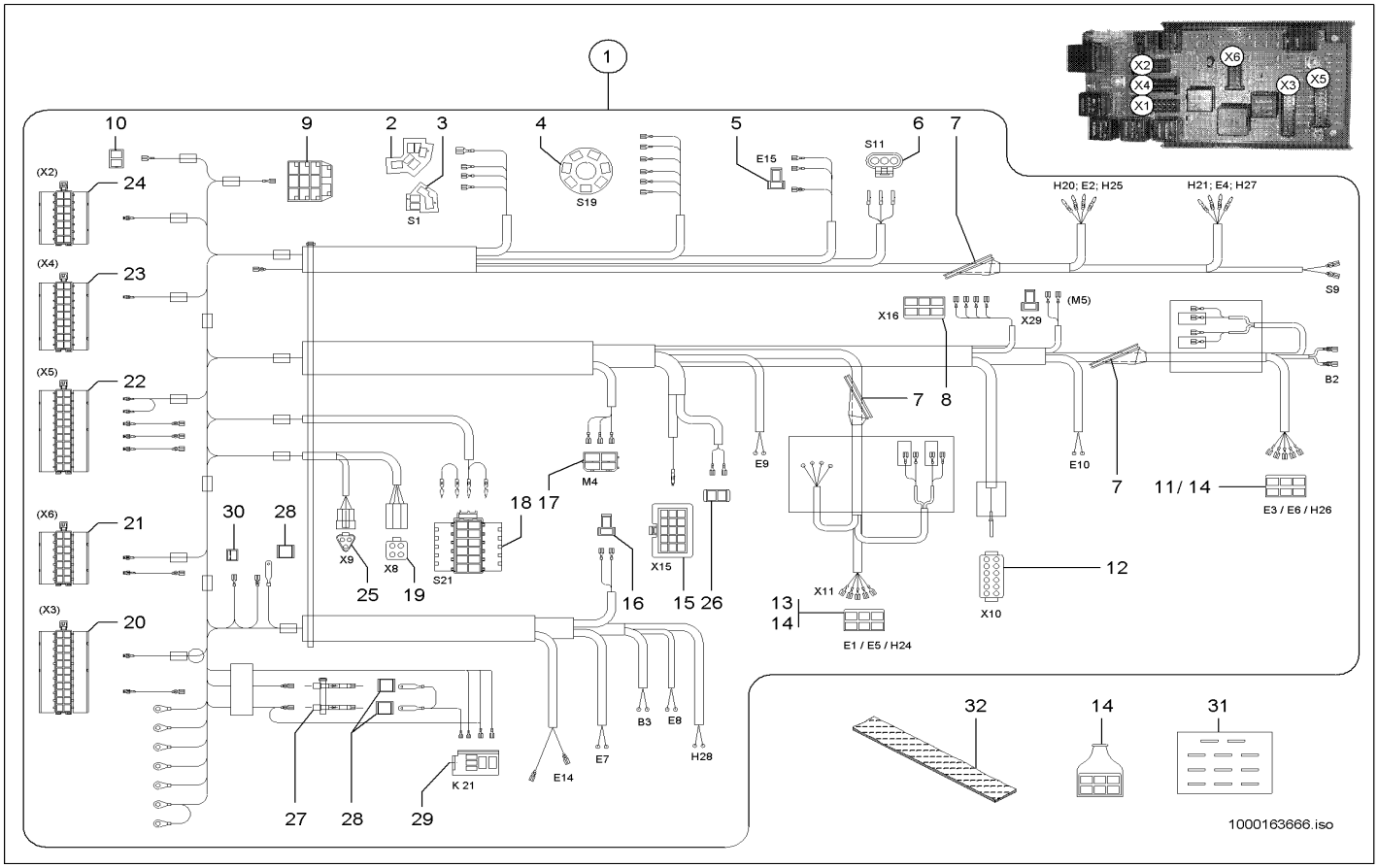


| Pos | Art.-Nr. | Anm. | Q'TY | BEZEICHNUNG | PART NAME | DESIGNATION |
|---|---|---|---|---|---|---|
| 1 | 1000162651 | | 1,00 ST | KABELBAUM | WIRING HARNESS | ARBRE DE CÂBLE |
| 2 | 1000027386 | | 1,00 ST | ZENTRALSTECKER | CENTRAL PLUG | BOUCHON CENTRALE |
| 3 | 1000027368 | | 1,00 ST | ZENTRALSTECKER | CENTRAL PLUG | BOUCHON CENTRALE |
| 4 | 1000104430 | | 1,00 ST | STECKERGEHÄUSE | PLUG HOUSING | BOÎTE DE BOUCHON |
| 5 | 1000095323 | | 2,00 ST | STECKHÜLSENGEHÄUSE | PLUG SLEEVE HOUSING | BOÎTE À DOUILLES DE BOUCHON |
| 6 | 1000051989 | | 1,00 ST | BUCHSENGEHÄUSE | BUSHING HOUSING | BOÎTE DE BAGUE |
| 7 | 1000133832 | | 3,00 ST | DURCHFÜHRUNGSRING | DUCT RING | BAGUE DE PASSAGE |
| 8 | 1000095337 | | 1,00 ST | STECKHÜLSENGEHÄUSE | PLUG SLEEVE HOUSING | BOÎTE À DOUILLES DE BOUCHON |
| 9 | 1000095333 | | 1,00 ST | STECKHÜLSENGEHÄUSE | PLUG SLEEVE HOUSING | BOÎTE À DOUILLES DE BOUCHON |
| 10 | 1000095336 | | 1,00 ST | STECKHÜLSENGEHÄUSE | PLUG SLEEVE HOUSING | BOÎTE À DOUILLES DE BOUCHON |
| 11 | 1000095337 | | 1,00 ST | STECKHÜLSENGEHÄUSE | PLUG SLEEVE HOUSING | BOÎTE À DOUILLES DE BOUCHON |
| 12 | 1000105121 | | 1,00 ST | BUCHSENGEHÄUSE | BUSHING HOUSING | BOÎTE DE BAGUE |
| 13 | 1000095337 | | 1,00 ST | STECKHÜLSENGEHÄUSE | PLUG SLEEVE HOUSING | BOÎTE À DOUILLES DE BOUCHON |
| 14 | 1000096652 | | 2,00 ST | GUMMIKAPPE | RUBBER CAP | BONNET EN CAOUTCHOUC |
| 15 | 1000104663 | | 1,00 ST | STIFTGEHÄUSE | PIN HOUSING | BOÎTE À BROCHES |
| 16 | 1000095323 | | 1,00 ST | STECKHÜLSENGEHÄUSE | PLUG SLEEVE HOUSING | BOÎTE À DOUILLES DE BOUCHON |
| 17 | 1000095325 | | 1,00 ST | STECKHÜLSENGEHÄUSE | PLUG SLEEVE HOUSING | BOÎTE À DOUILLES DE BOUCHON |
| 18 | 1000103949 | | 1,00 ST | BUCHSENGEHÄUSE | BUSHING HOUSING | BOÎTE DE BAGUE |
| 19 | 1000104286 | | 1,00 ST | BUCHSENGEHÄUSE | BUSHING HOUSING | BOÎTE DE BAGUE |
| 20 | 1000100973 | | 1,00 ST | BUCHSENGEHÄUSE | BUSHING HOUSING | BOÎTE DE BAGUE |
| 21 | 1000100971 | | 1,00 ST | BUCHSENGEHÄUSE | BUSHING HOUSING | BOÎTE DE BAGUE |
| 22 | 1000104433 | | 1,00 ST | BUCHSENGEHÄUSE | BUSHING HOUSING | BOÎTE DE BAGUE |
| 23 | 1000104432 | | 1,00 ST | BUCHSENGEHÄUSE | BUSHING HOUSING | BOÎTE DE BAGUE |
| 24 | 1000100971 | | 1,00 ST | BUCHSENGEHÄUSE | BUSHING HOUSING | BOÎTE DE BAGUE |
| 25 | 1000027429 | | 1,00 ST | GEHÄUSE | HOUSING | BOÎTE |
| 26 | 1000027357 | | 1,00 ST | STECKHÜLSENGEHÄUSE | PLUG SLEEVE HOUSING | BOÎTE À DOUILLES DE BOUCHON |
| 27 | 1000100594 | | 2,00 ST | SPERRDIODE | BLOCK DIODE | DIODE SUPPRESSEUSE |
| 28 | 1000085008 | | 2,00 ST | FLACHSTECKERGEHÄUSE | PLUG HOUSING | BOÎTE DE BOUCHON |
| 29 | 1000100593 | | 1,00 ST | SOCKEL | SOCLE | SOCLE |
| 30 | 1000103336 | | 1,00 ST | FLACHSTECKERGEHÄUSE | PLUG HOUSING | BOÎTE DE BOUCHON |
| 31 | 1000162652 | | 1,00 ST | ELEKTRONIK FAHRSTUFE | ELECTRONIC RUNNING STEP | ÉLECTRIQUE DE ÉTAPE COURANTE |
| 32 | 1000162830 | 0,65 m | 1,00 ST | HAKENBAND | HOOK STRAP | BANDE À CROCHET |

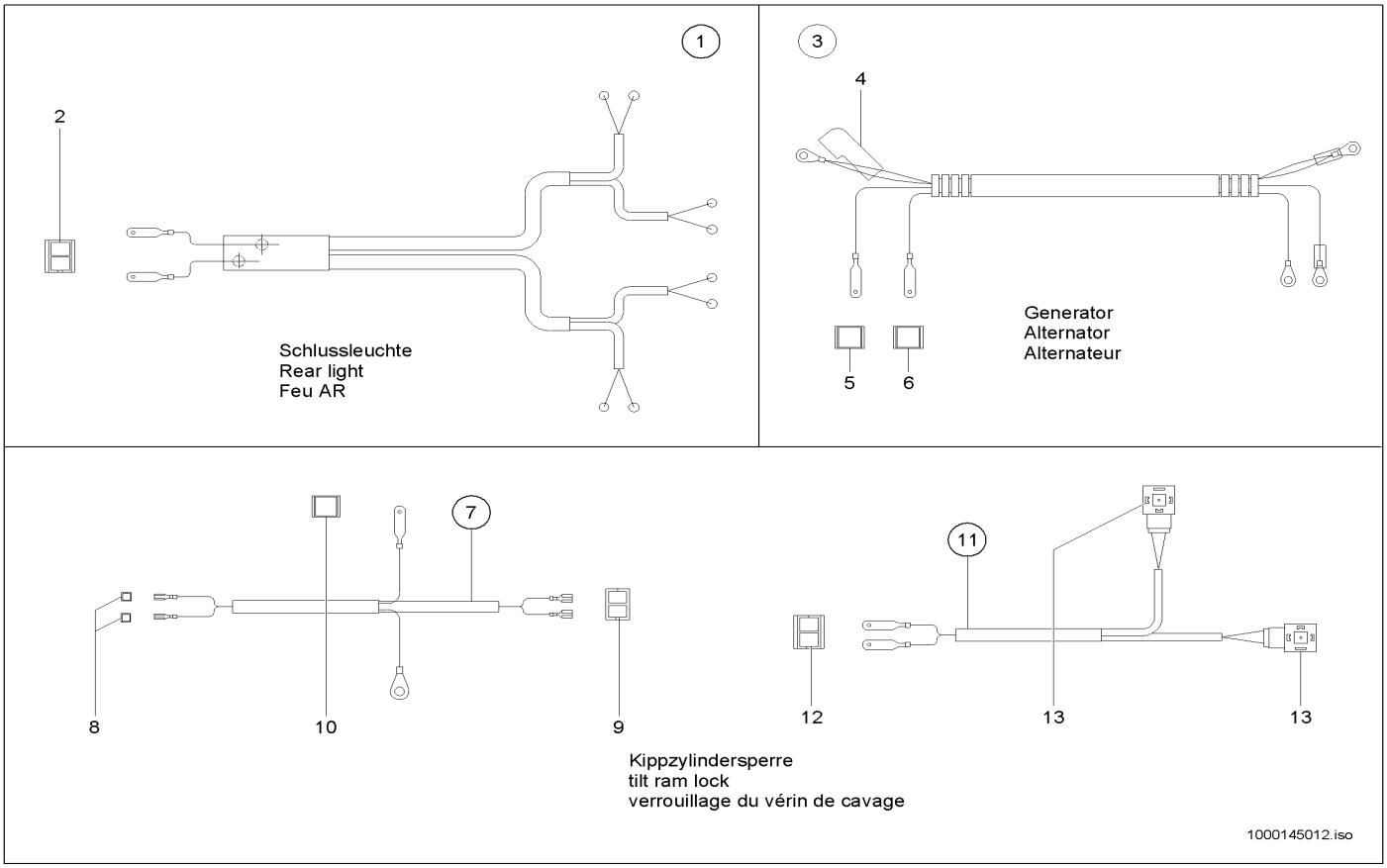


| Pos | Art.-Nr. | Anm. | Q'TY | BEZEICHNUNG | PART NAME | DESIGNATION |
|---|---|---|---|---|---|---|
| 1 | 1000110410 | | 1,00 ST | KABELBAUM | WIRING HARNESS | ARBRE DE CÂBLE |
| 2 | 1000000481 | | 1,00 ST | FLACHSTECKERGEHÄUSE | PLUG HOUSING | BOÎTE DE BOUCHON |
| 3 | 1000101781 | | 1,00 ST | KABEL | CABLE | CÂBLE |
| 4 | 1000098966 | | 1,00 ST | SCHUTZKAPPE | PROTECTING CAP | CAPOT DE PROTECTION |
| 5 | 1000085008 | | 1,00 ST | FLACHSTECKERGEHÄUSE | PLUG HOUSING | BOÎTE DE BOUCHON |
| 6 | 1000098669 | | 1,00 ST | FLACHSTECKERGEHÄUSE | PLUG HOUSING | BOÎTE DE BOUCHON |
| 7 | 1000141238 | | 1,00 ST | KABELBAUM | WIRING HARNESS | ARBRE DE CÂBLE |
| 8 | 1000027370 | | 2,00 ST | STECKHÜLSENGEHÄUSE | PLUG SLEEVE HOUSING | BOÎTE À DOUILLES DE BOUCHON |
| 9 | 1000095336 | | 1,00 ST | STECKHÜLSENGEHÄUSE | PLUG SLEEVE HOUSING | BOÎTE À DOUILLES DE BOUCHON |
| 10 | 1000085008 | | 1,00 ST | FLACHSTECKERGEHÄUSE | PLUG HOUSING | BOÎTE DE BOUCHON |
| 11 | 1000141239 | | 1,00 ST | KABELBAUM | WIRING HARNESS | ARBRE DE CÂBLE |
| 12 | 1000000481 | | 1,00 ST | FLACHSTECKERGEHÄUSE | PLUG HOUSING | BOÎTE DE BOUCHON |
| 13 | 1000000455 | | 2,00 ST | GERÄTESTECKER | PLUG | BOUCHON |

# KENNZEICHENBELEUCHTUNG
# NUMBERPLATE LIGHT BG
# ECLAIRAGE DE LA PLAQUE MINÉRALOGIQUE BG



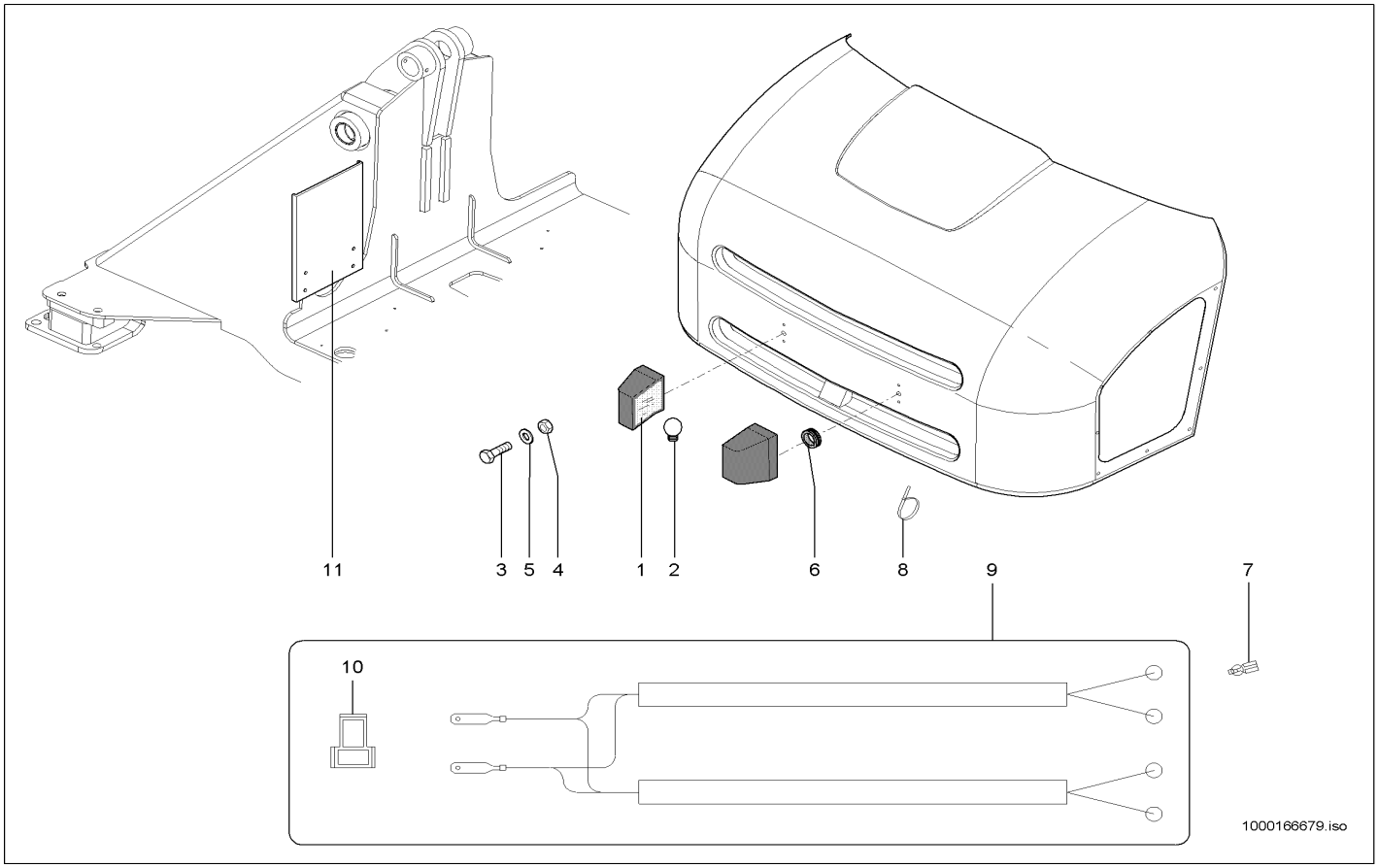


| Pos | Art.-Nr. | Anm. | Q'TY | BEZEICHNUNG | PART NAME | DESIGNATION |
|---|---|---|---|---|---|---|
| 1 | 1000027062 | | 2,00 ST | KENNZEICHENLEUCHTE | CHARACTERISTIC LIGHT | LUMIÈRE DE LA PLAQUE D'IMMATRICULATION |
| 2 | 1000085686 | | 2,00 ST | GLÜHLAMPE | BULB | LAMPE À INCANDESCENCE |
| 3 | 1000047664 | | 4,00 ST | 6KT-SCHRAUBE | HEX SCREW | VIS À TÊTE HEXAGONALE |
| 4 | 1000085587 | | 4,00 ST | 6KT-MUTTER | HEXAGON NUT | ÉCROU HEXAGONAL |
| 5 | 1000095342 | | 4,00 ST | SCHEIBE | WASHER | RONDELLE |
| 6 | 1000052685 | | 2,00 ST | DURCHFÜHRUNGSRING | JUNCTION | ANNEAU D'APPLICATION |
| 7 | 1000089776 | | 4,00 ST | FLACHSTECKHÜLSE | PLUG SLEEVE | DOUILLE DE CLIP |
| 8 | 1000090083 | | 6,00 ST | KABELBINDER | CABLE STRAP | BOUTISSE DE CÂBLE |
| 9 | 1000102660 | | 1,00 ST | KABELBAUM | WIRING HARNESS | ARBRE DE CÂBLE |
| 10 | 1000095329 | | 1,00 ST | FLACHSTECKERGEHÄUSE | PLUG HOUSING | BOÎTE DE BOUCHON |
| 11 | 1000154072 | | 1,00 ST | HALTER | BRACKET CLUTCH | SUPPORT |

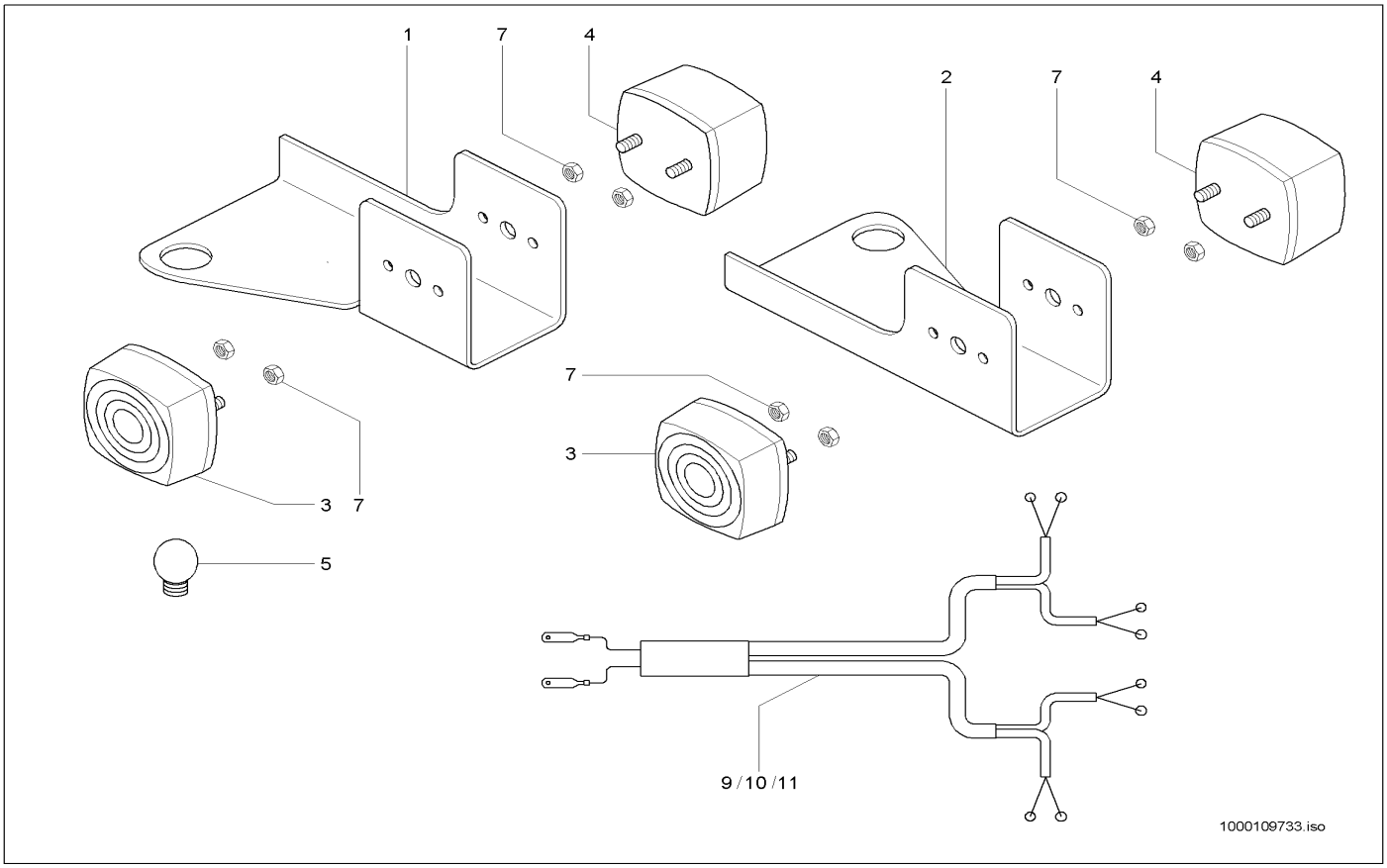


| Pos | Art.-Nr. | Anm. | Q'TY | BEZEICHNUNG | PART NAME | DESIGNATION |
|---|---|---|---|---|---|---|
| 1 | 1000106414 | | 1,00 ST | HALTER | BRACKET CLUTCH | SUPPORT |
| 2 | 1000106434 | | 1,00 ST | HALTER | BRACKET CLUTCH | SUPPORT |
| 3 | 1000106419 | | 2,00 ST | BEGRENZUNGSLEUCHTE | LIMITING LIGHT | LUMIÈRE DE LIMITATION |
| 4 | 1000027077 | | 2,00 ST | SCHLUSSLEUCHTE | REAR LIGHT | FEU ARRIÈRE |
| 5 | 1000085686 | | 4,00 ST | GLÜHLAMPE | BULB | LAMPE À INCANDESCENCE |
| 6 | 1000085378 | | 8,00 ST | 6KT-SCHRAUBE | HEX SCREW | VIS À TÊTE HEXAGONALE |
| 7 | 1000085581 | | 8,00 ST | 6KT-MUTTER | HEXAGON NUT | ÉCROU HEXAGONAL |
| 8 | 1000092289 | | 8,00 ST | SCHEIBE | WASHER | RONDELLE |
| 9 | 1000092494 | | 8,00 ST | STECKHÜLSE | PLUG SLEEVE | DOUILLE DE COURANT |
| 10 | 1000027435 | | 4,00 ST | ISOLIERHÜLSE | INSULATING SLEEVE | DOUILLE ISOLANT |
| 11 | 1000110410 | | 1,00 ST | KABELBAUM | WIRING HARNESS | ARBRE DE CÂBLE |

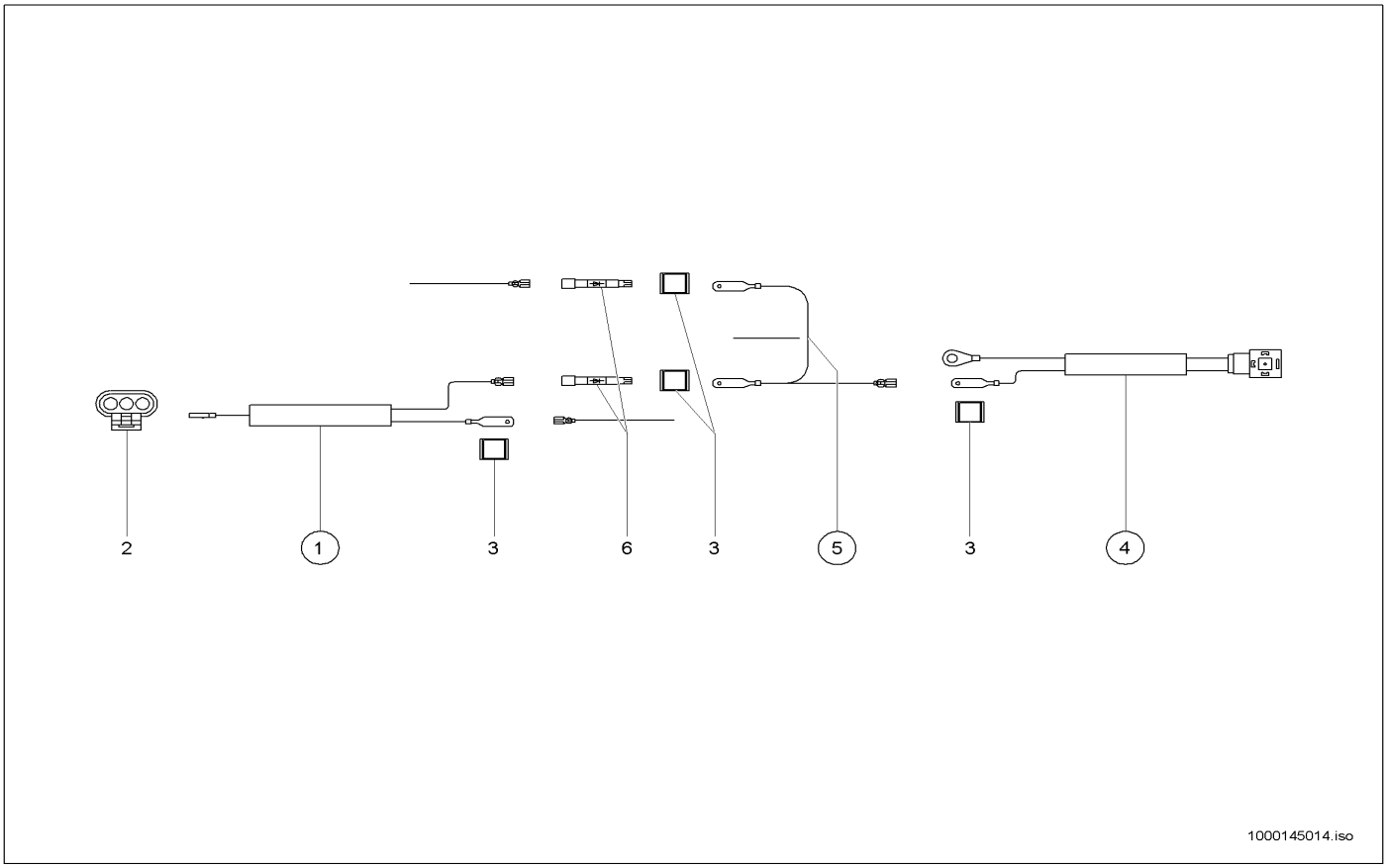


| Pos | Art.-Nr. | Anm. | Q'TY | BEZEICHNUNG | PART NAME | DESIGNATION |
|---|---|---|---|---|---|---|
| 1 | 1000141382 | | 1,00 ST | KABEL | CABLE | CÂBLE |
| 2 | 1000051989 | | 1,00 ST | BUCHSENGEHÄUSE | BUSHING HOUSING | BOÎTE DE BAGUE |
| 3 | 1000085008 | | 4,00 ST | FLACHSTECKERGEHÄUSE | PLUG HOUSING | BOÎTE DE BOUCHON |
| 4 | 1000139716 | | 1,00 ST | KABEL | CABLE | CÂBLE |
| 5 | 1000141383 | | 1,00 ST | KABEL | CABLE | CÂBLE |
| 6 | 1000100594 | 3 A | 2,00 ST | SPERRDIODE | BLOCK DIODE | DIODE SUPPRESSEUSE |

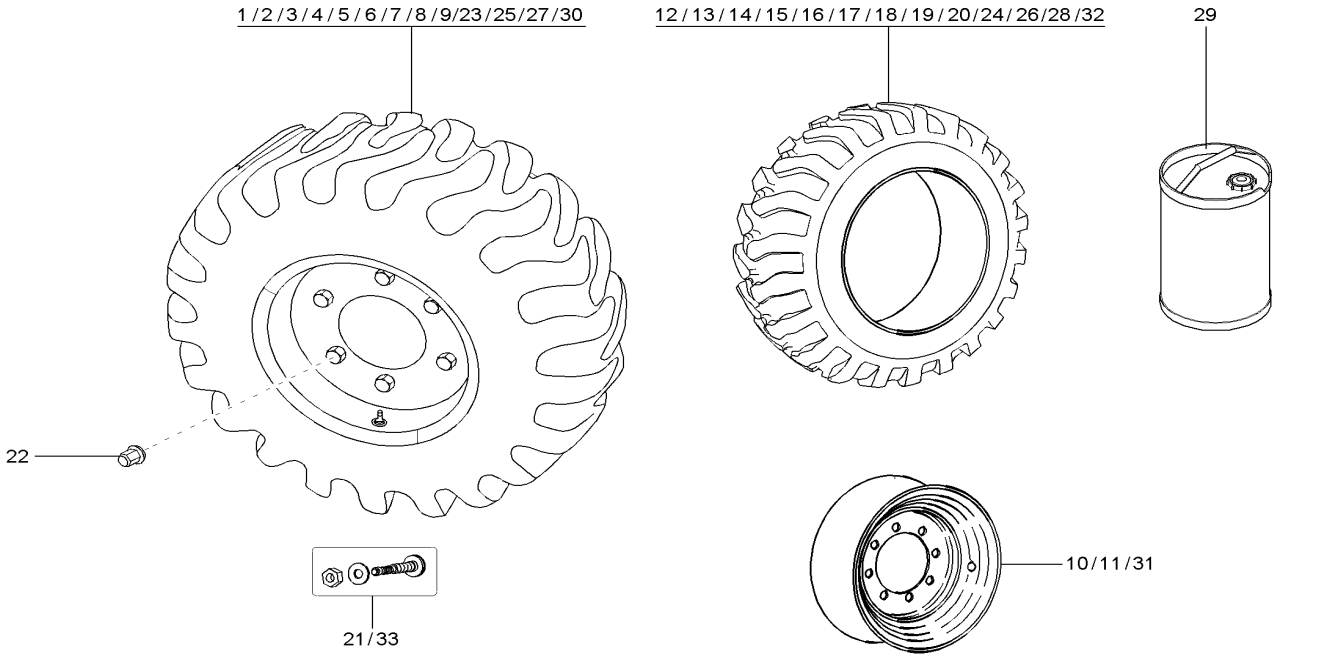


| Pos | Art.-Nr. | Anm. | Q'TY | BEZEICHNUNG | PART NAME | DESIGNATION |
|---|---|---|---|---|---|---|
| 1 | 1000106691 | 405/70 R20TL SPT9 13x20 ET=20 | 4,00 ST | RAD | WHEEL | ROUE |
| 2 | 1000107074 | 425/75 R20XZSL148B 13x20 ET=20 | 4,00 ST | SCHEIBENRAD KPL. 425/75 R20XZSL155B | WHEEL RIM KPL. 425/75 R20XZSL155B | JANTE KPL. 425/75 R20XZSL155B |
| 3 | 1000051888 | 14.5-20 MPT04 12PR 11x20 ET=20 | 4,00 ST | SCHEIBENRAD KPL. 14.5-20 12PR MPT-04 TBL | WHEEL RIM KPL. 14.5-20 12PR MPT-04 TBL | JANTE KPL. 14.5-20 12PR MPT-04 TBL |
| 4 | 1000102686 | 16/70-20 MPT04 14 PR 13x20 ET=20 | 4,00 ST | SCHEIBENRAD KPL. 16/70-20 14PR MPT-04TBL | WHEEL RIM 16/70-20 14 PR MPT-04 TBL | JANTE KPL. 16/70-20 14 PR MPT-04 TBL |
| 5 | 1000051890 | 375/75 R20XM27 143B 11x20 ET=20 | 4,00 ST | SCHEIBENRAD KPL. 375/75 R20XM27 143B | WHEEL RIM KPL. 375/75 R20XM27 143B | JANTE KPL. 375/75 R20XM27 143B |
| 6 | 1000051891 | 375/75 R20XZSL 143B 11x20 ET=20 | 4,00 ST | SCHEIBENRAD KPL. 375/75 R20XZSL 143B | WHEEL RIM KPL. 375/75 R20XZSL 143B | JANTE KPL. 375/75 R20XZSL 143B |
| 7 | 1000128251 | 405/70 R20 EM-01 143B 13x20 ET=20 | 4,00 ST | SCHEIBENRAD KPL. 405/70 R20 143B EM-01 T | WHEEL RIM KPL. 405/70 R20 143B EM-01 T | JANTE KPL. 405/70 R20 143B EM-01 T |
| 8 | 1000128957 | 405/70 R20 MPT 70E 13x20 ET=20 | 4,00 ST | RAD | WHEEL | ROUE |
| 9 | 1000135252 | 365/80 R20 MPT81 11x20 ET=20 | 4,00 ST | SCHEIBENRAD KPL. 365/80 R20 MPT81 | WHEEL RIM KPL. 365/80 R20 MPT81 | JANTE KPL. 365/80 R20 MPT81 |
| 10 | 1000102682 | 13x20 ET=20 | 4,00 ST | SCHEIBENRAD | RIM | ROUE PLEINE |
| 11 | 1000051926 | 11x20 ET=20 | 4,00 ST | SCHEIBENRAD | RIM | ROUE PLEINE |
| 12 | 1000100812 | 405/70 R20 TL SPT9 | 4,00 ST | REIFEN | TYRE | PNEU |
| 13 | 1000100813 | 425/75 R20 XZSL 155B | 4,00 ST | REIFEN | TYRE | PNEU |
| 14 | 1000026910 | 14.5-20 MPT 04 12PR | 4,00 ST | REIFEN | TYRE | PNEU |
| 15 | 1000026908 | 16/70-20 MPT 04 14PR | 4,00 ST | REIFEN | TYRE | PNEU |
| 16 | 1000100811 | 375/75 R 20 XM 27 143 B | 4,00 ST | REIFEN | TYRE | PNEU |
| 17 | 1000026845 | 375/75 R20 XZSL 143B | 4,00 ST | REIFEN | TYRE | PNEU |
| 18 | 1000128250 | 405/70 R20 EM-01 143B | 4,00 ST | REIFEN | TYRE | PNEU |
| 19 | 1000026924 | 405/70 R20 MPT 70 E | 4,00 ST | REIFEN | TYRE | PNEU |
| 20 | 1000135253 | 365/80 R20 MPT81 | 4,00 ST | REIFEN | TYRE | PNEU |
| 21 | 1000051898 | | 4,00 ST | LUFTVENTIL | AIR VALVE | SOUPAPE D'AIR |
| 22 | 1000100046 | | 4,00 ST | RADMUTTER | WHEEL NUT | ÉCROU DE ROUE |
| 23 | 1000149606 | 16/70-20 TL E91-2 14PR 13x20 ET=20 | 4,00 ST | SCHEIBENRAD KPL. 16./70-20 E91-2 EM 14PR | WHEEL RIM KPL. 16./70-20 E91-2 EM 14PR | JANTE KPL. 16./70-20 E91-2 EM 14PR |
| 24 | 1000149607 | 16/70-20 TL E91-2 14PR | 4,00 ST | REIFEN 16./70-20 E91-2 EM 14PR TL NY | TYRE 16./70-20 E91-2 EM 14PR TL NY | PNEUMATIQUE 16./70-20 E91-2 EM 14PR T |
| 25 | 1000151120 | 425/75 R20 MPT AC70G 13x20 ET=20 | 4,00 ST | RAD | WHEEL | ROUE |
| 26 | 1000145685 | 425/75 R20 MPT AC70G | 4,00 ST | REIFEN | TYRE | PNEU |
| 27 | 1000153233 | 405/70-20 MPT01 149B 13x20 ET=20 | 4,00 ST | SCHEIBENRAD KPL. 405/70-20 14PR MPT-01 T | WHEEL RIM KPL. 405/70-20 14PR MPT-01 TBL | JANTE KPL. 405/70-20 14PR MPT-01 TBL |
| 28 | 1000146135 | 405/70-20 MPT01 149B | 4,00 ST | REIFEN 405/70-20 14PR MPT-01 TBL | TYRE 405/70-20 14PR MPT-01 TBL | PNEUMATIQUE 405/70-20 14PR MPT-01 T |
| 29 | 1000096901 | | 1,00 L | PANNENSCHUTZ | BREAKDOWN PROTECTION | PROTECTION DE PANNE |

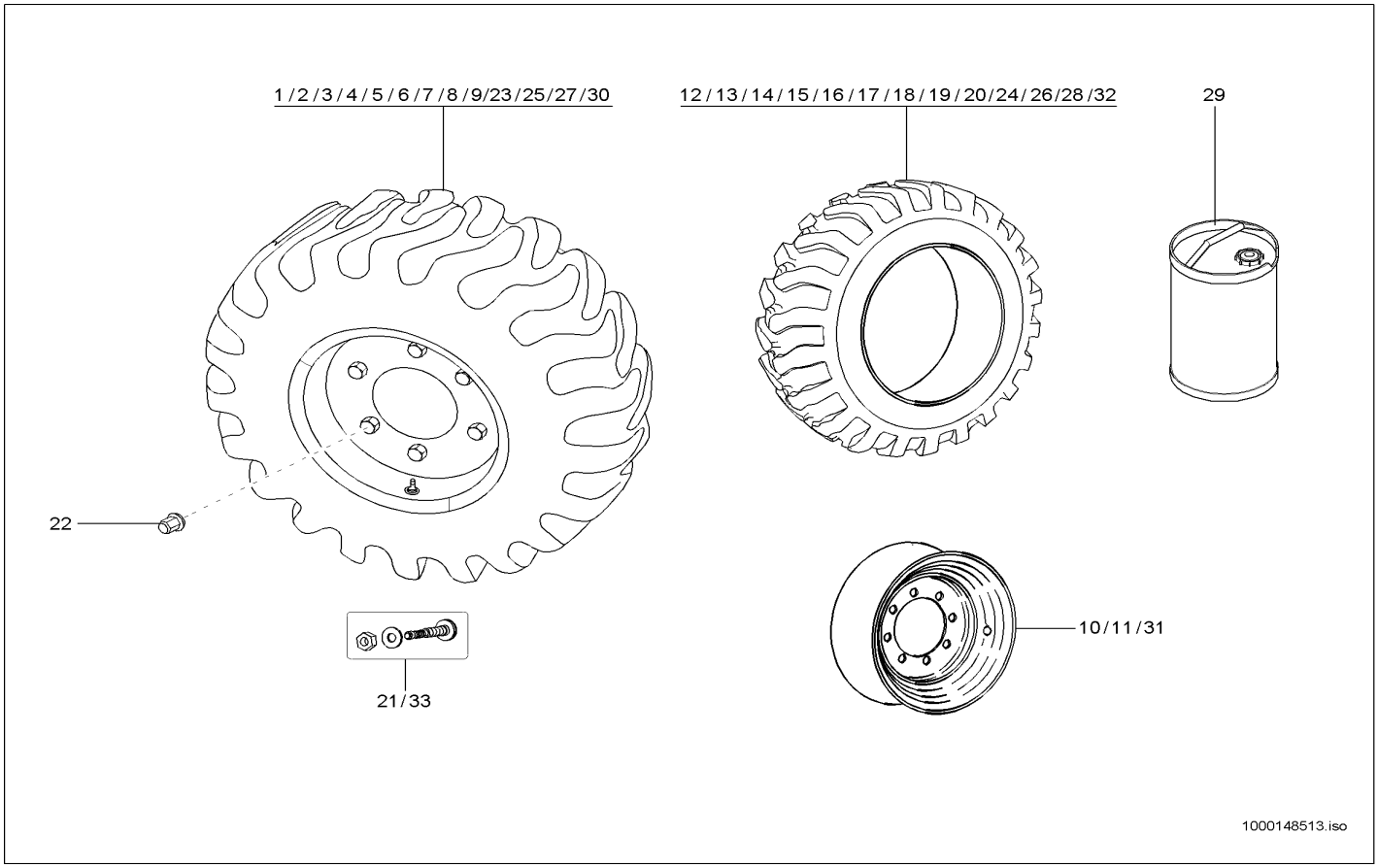


| Pos | Art.-Nr. | Anm. | Q'TY | BEZEICHNUNG | PART NAME | DESIGNATION |
|---|---|---|---|---|---|---|
| 30 | 1000117061 | 14.5-20 MPT04 12PR ag | 4,00 ST | SCHEIBENRAD KPL. 14.5-20 MPT04 12PR AG | WHEEL RIM KPL. 14.5-20 MPT04 12PR AG | JANTE KPL. 14.5-20 MPT04 12PR AG |
| 31 | 1000051926 | 11x20 ET=20 | 4,00 ST | SCHEIBENRAD | RIM | ROUE PLEINE |
| 32 | 1000026910 | | 4,00 ST | REIFEN | TYRE | PNEU |
| 33 | 1000051898 | | 4,00 ST | LUFTVENTIL | AIR VALVE | SOUPAPE D'AIR |

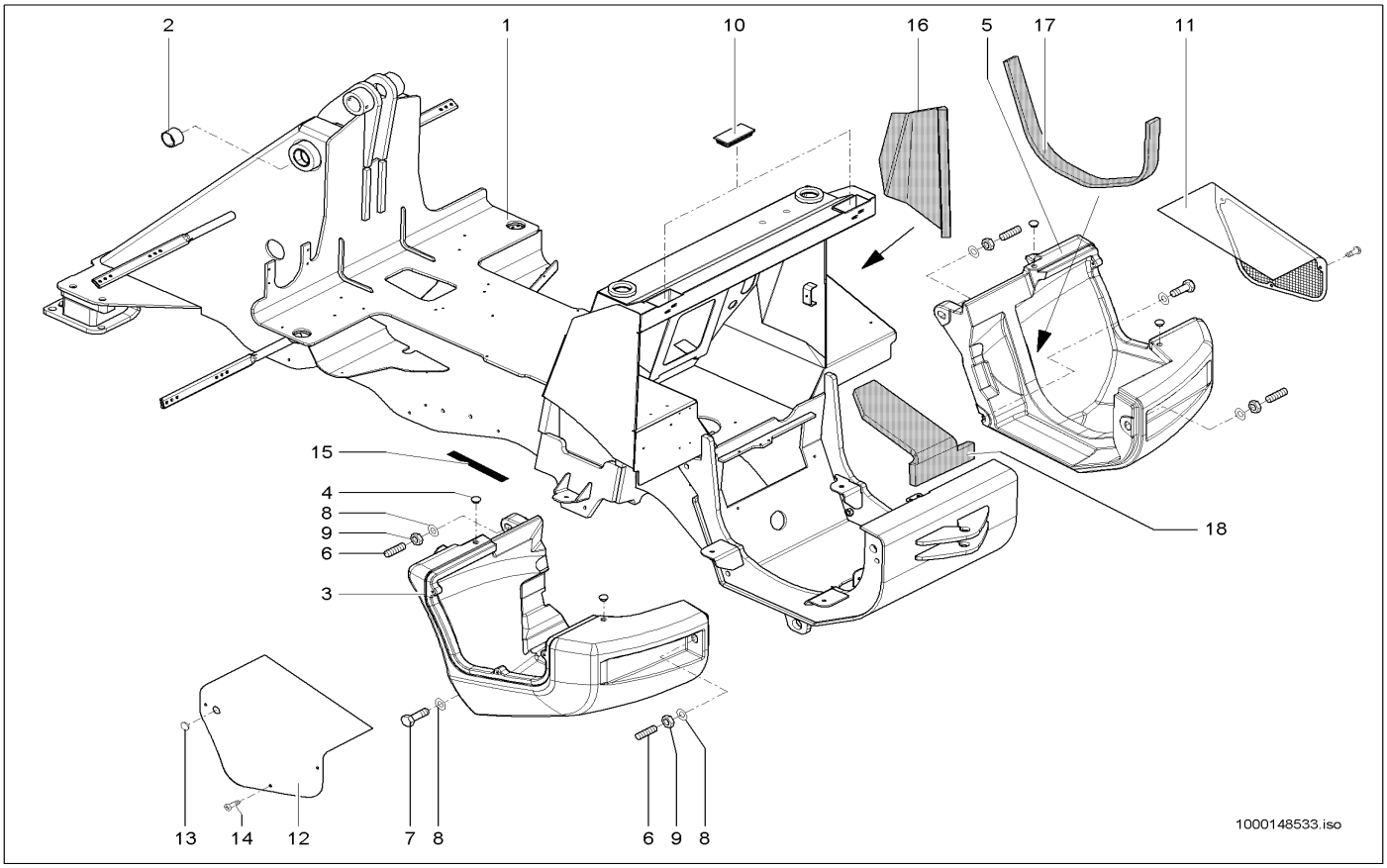


| Pos | Art.-Nr. | Anm. | Q'TY | BEZEICHNUNG | PART NAME | DESIGNATION |
|---|---|---|---|---|---|---|
| 1 | 1000137576 | | 1,00 ST | RAHMEN | FRAME | CADRE |
| 2 | 1000052664 | | 2,00 ST | EINSPANNBUCHSE | BUSHING | BAGUE |
| 3 | 1000141789 | | 1,00 ST | BALLASTGEWICHT | BALLAST WEIGHT | POIDS DE BALLAST |
| 4 | 1000030656 | | 1,00 ST | VERSCHLUSSSTOPFEN | LOCK PLUG | BOUCHON DE FERMETURE |
| 5 | 1000141790 | | 1,00 ST | BALLASTGEWICHT | BALLAST WEIGHT | POIDS DE BALLAST |
| 6 | 1000104924 | | 4,00 ST | STIFTSCHRAUBE | STUD | GOUJON |
| 7 | 1000047715 | | 2,00 ST | 6KT-SCHRAUBE | HEX SCREW | VIS À TÊTE HEXAGONALE |
| 8 | 1000020782 | | 6,00 ST | SCHEIBE | WASHER | RONDELLE |
| 9 | 1000020788 | | 6,00 ST | 6KT-MUTTER | HEXAGON NUT | ÉCROU HEXAGONAL |
| 10 | 1000142928 | | 2,00 ST | VERSCHLUSSSTOPFEN | LOCK PLUG | BOUCHON DE FERMETURE |
| 11 | 1000144296 | re. | 1,00 ST | GITTER | SCREEN | GRILLE |
| 12 | 1000144295 | li. | 1,00 ST | ABDECKUNG | COVER | COUVERCLE |
| 13 | 1000142146 | | 1,00 ST | STOPFEN | PLUG | BOUCHON |
| 14 | 1000048523 | | 6,00 ST | FLACHKOPFSCHRAUBE | FLAT HEAD SCREW | VIS DE TÊTE PLATE |
| 15 | 1000097033 | | 1,00 M | GUMMIBAND | RUBBER STRIP | ÉLASTIQUE |
| 16 | 1000143700 | | 1,00 ST | DÄMMATTE | INSULATING MAT | NATTE ISOLANT |
| 17 | 1000143699 | | 1,00 ST | DÄMMATTE | INSULATING MAT | NATTE ISOLANT |
| 18 | 1000143821 | | 1,00 ST | DÄMMATTE | INSULATING MAT | NATTE ISOLANT |

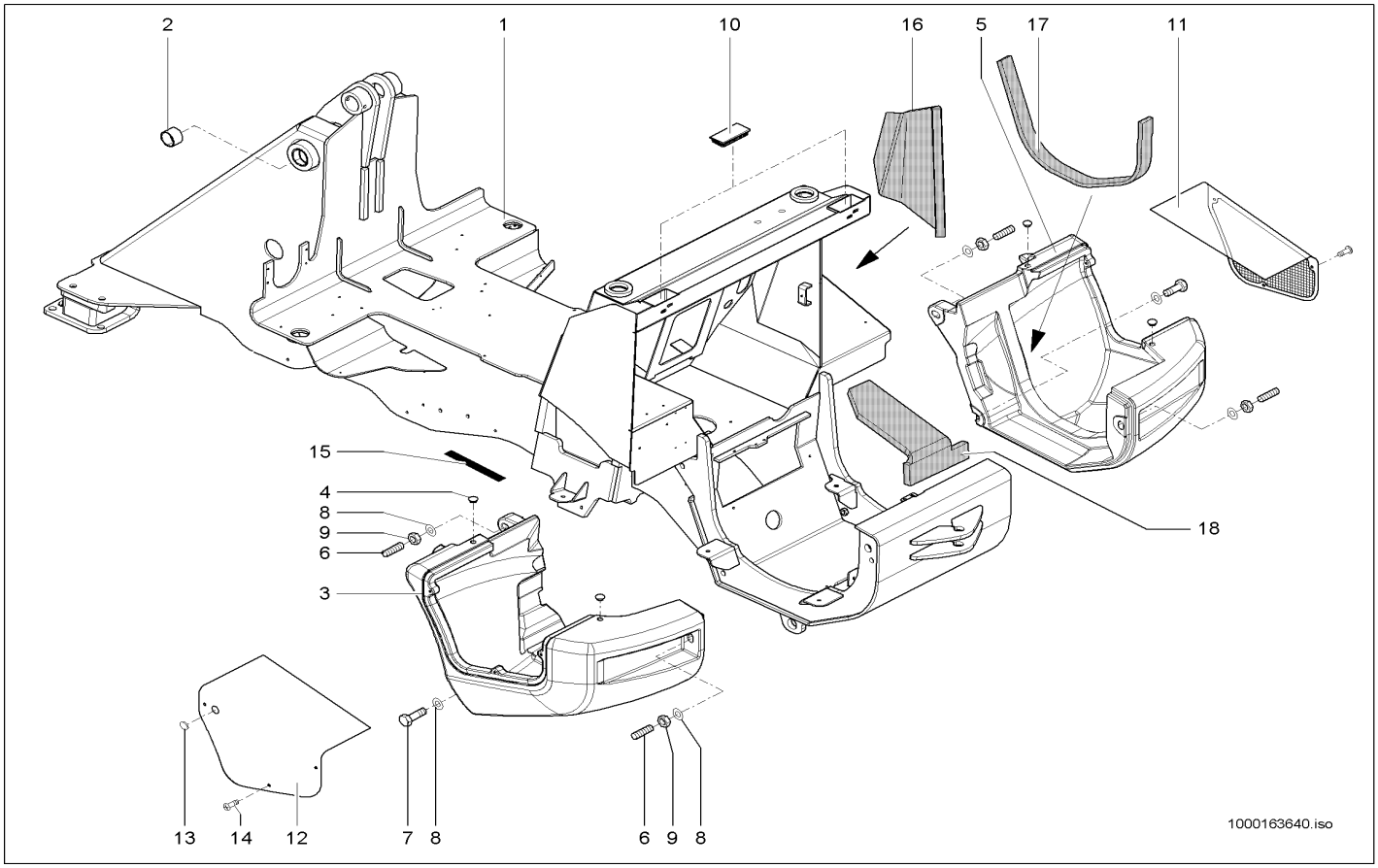


| Pos | Art.-Nr. | Anm. | Q'TY | BEZEICHNUNG | PART NAME | DESIGNATION |
|---|---|---|---|---|---|---|
| 1 | 1000162890 | | 1,00 ST | RAHMEN | FRAME | CADRE |
| 2 | 1000052664 | | 2,00 ST | EINSPANNBUCHSE | BUSHING | BAGUE |
| 3 | 1000141789 | | 1,00 ST | BALLASTGEWICHT | BALLAST WEIGHT | POIDS DE BALLAST |
| 4 | 1000030656 | | 1,00 ST | VERSCHLUSSSTOPFEN | LOCK PLUG | BOUCHON DE FERMETURE |
| 5 | 1000141790 | | 1,00 ST | BALLASTGEWICHT | BALLAST WEIGHT | POIDS DE BALLAST |
| 6 | 1000104924 | | 4,00 ST | STIFTSCHRAUBE | STUD | GOUJON |
| 7 | 1000047715 | | 2,00 ST | 6KT-SCHRAUBE | HEX SCREW | VIS À TÊTE HEXAGONALE |
| 8 | 1000020782 | | 6,00 ST | SCHEIBE | WASHER | RONDELLE |
| 9 | 1000020788 | | 6,00 ST | 6KT-MUTTER | HEXAGON NUT | ÉCROU HEXAGONAL |
| 10 | 1000142928 | | 2,00 ST | VERSCHLUSSSTOPFEN | LOCK PLUG | BOUCHON DE FERMETURE |
| 11 | 1000144296 | re. | 1,00 ST | GITTER | SCREEN | GRILLE |
| 12 | 1000144295 | li. | 1,00 ST | ABDECKUNG | COVER | COUVERCLE |
| 13 | 1000142146 | | 1,00 ST | STOPFEN | PLUG | BOUCHON |
| 14 | 1000048523 | | 6,00 ST | FLACHKOPFSCHRAUBE | FLAT HEAD SCREW | VIS DE TÊTE PLATE |
| 15 | 1000097033 | | 1,00 M | GUMMIBAND | RUBBER STRIP | ÉLASTIQUE |
| 16 | 1000143700 | | 1,00 ST | DÄMMATTE | INSULATING MAT | NATTE ISOLANT |
| 17 | 1000143699 | | 1,00 ST | DÄMMATTE | INSULATING MAT | NATTE ISOLANT |
| 18 | 1000143821 | | 1,00 ST | DÄMMATTE | INSULATING MAT | NATTE ISOLANT |

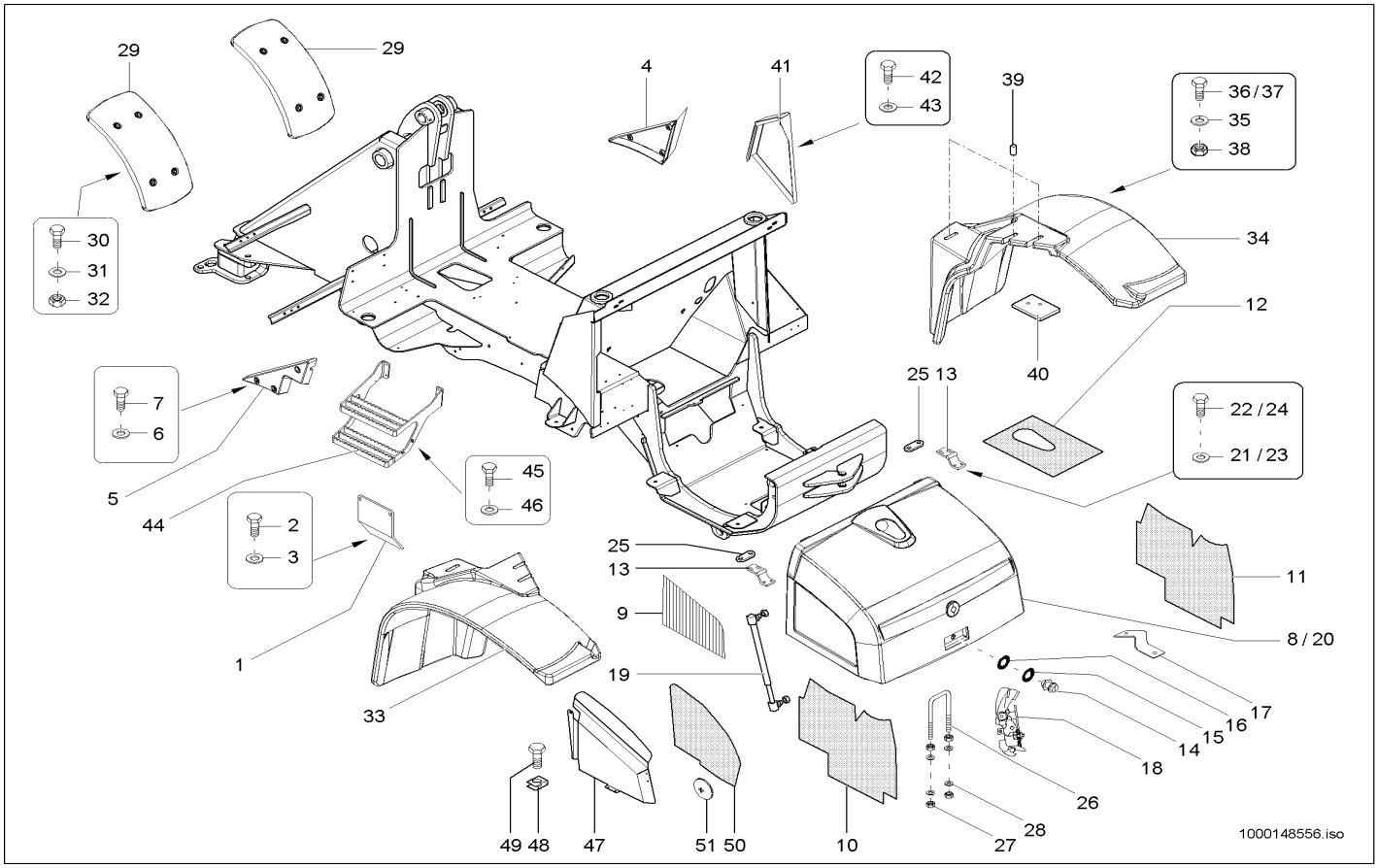


| Pos | Art.-Nr. | Anm. | Q'TY | BEZEICHNUNG | PART NAME | DESIGNATION |
|---|---|---|---|---|---|---|
| 1 | 1000132329 | | 1,00 ST | WARTUNGSDECKEL | MAINTENANCE COVER | COUVERTURE D'ENTRETIEN |
| 2 | 1000019136 | | 4,00 ST | 6KT-SCHRAUBE | HEX SCREW | VIS À TÊTE HEXAGONALE |
| 3 | 1000013027 | | 4,00 ST | SCHEIBE | WASHER | RONDELLE |
| 4 | 1000035453 | | 1,00 ST | VERKLEIDUNG | TRIM | RÉVÊTEMENT |
| 5 | 1000035452 | | 1,00 ST | VERKLEIDUNG | TRIM | RÉVÊTEMENT |
| 6 | 1000092290 | | 6,00 ST | SCHEIBE | WASHER | RONDELLE |
| 7 | 1000085382 | | 6,00 ST | 6KT-SCHRAUBE | HEX SCREW | VIS À TÊTE HEXAGONALE |
| 8 | 1000132382 | | 1,00 ST | MOTORHAUBE | ENGINE HOOD | CAPOT |
| 9 | 1000133858 | | 1,00 ST | GITTER | SCREEN | GRILLE |
| 10 | 1000137004 | li. | 1,00 ST | DÄMMATTE | INSULATING MAT | NATTE ISOLANT |
| 11 | 1000137005 | re. | 1,00 ST | DÄMMATTE | INSULATING MAT | NATTE ISOLANT |
| 12 | 1000137006 | | 1,00 ST | DÄMMATTE | INSULATING MAT | NATTE ISOLANT |
| 13 | 1000116629 | | 2,00 ST | SCHARNIER | HINGE | CHARNIÈRE |
| 14 | 1000100211 | | 1,00 ST | SCHLOSS | LOCK | FERMOIR |
| 15 | 1000100028 | | 1,00 ST | SCHEIBE | WASHER | RONDELLE |
| 16 | 1000100220 | | 1,00 ST | DISTANZSTÜCK | DISTANCE PIECE | PIÈCE D'ÉCARTEMENT |
| 17 | 1000100222 | | 1,00 ST | TASTER | FEELER | PALPEUR |
| 18 | 1000086541 | | 1,00 ST | SCHLOSS | LOCK | FERMOIR |
| 19 | 1000000997 | | 1,00 ST | GASFEDER | GAS STRUT | RESSORT DE GAZ |
| 20 | 1000097173 | | 4,00 M | PROFIL | PROFILE | PROFIL |
| 21 | 1000015431 | | 4,00 ST | SCHEIBE | WASHER | RONDELLE |
| 22 | 1000019136 | | 4,00 ST | 6KT-SCHRAUBE | HEX SCREW | VIS À TÊTE HEXAGONALE |
| 23 | 1000095341 | | 8,00 ST | SCHEIBE | WASHER | RONDELLE |
| 24 | 1000015343 | | 4,00 ST | 6KT-SCHRAUBE | HEX SCREW | VIS À TÊTE HEXAGONALE |
| 25 | 1000125758 | | 2,00 ST | GEWINDEPLATTE | THREAD PLATE | PLAQUE FILETÉE |
| 26 | 1000035444 | | 1,00 ST | BÜGEL | HOLDER | ARCHET |
| 27 | 1000013021 | | 4,00 ST | 6KT-MUTTER | HEXAGON NUT | ÉCROU HEXAGONAL |
| 28 | 1000015431 | | 4,00 ST | SCHEIBE | WASHER | RONDELLE |
| 29 | 1000144653 | | 2,00 ST | RADABDECKUNG | COVER WHEEL | COUVERTURE DE ROUE |
| 30 | 1000085391 | | 8,00 ST | 6KT-SCHRAUBE | HEX SCREW | VIS À TÊTE HEXAGONALE |
| 31 | 1000013027 | | 8,00 ST | SCHEIBE | WASHER | RONDELLE |
| 32 | 1000013022 | | 8,00 ST | 6KT-MUTTER | HEXAGON NUT | ÉCROU HEXAGONAL |
| 33 | 1000141787 | li. | 1,00 ST | RADABDECKUNG | WHEEL COVER | COUVERCLE ROUES |
| 34 | 1000141788 | re. | 1,00 ST | RADABDECKUNG | WHEEL COVER | COUVERCLE ROUES |
| 35 | 1000015431 | | 10,00 ST | SCHEIBE | WASHER | RONDELLE |
| 36 | 1000015402 | M8x65 | 2,00 ST | 6KT-SCHRAUBE | HEX SCREW | VIS À TÊTE HEXAGONALE |
| 37 | 1000085319 | M8x80 | 4,00 ST | 6KT-SCHRAUBE | HEX SCREW | VIS À TÊTE HEXAGONALE |
| 38 | 1000013022 | | 4,00 ST | 6KT-MUTTER | HEXAGON NUT | ÉCROU HEXAGONAL |
| 39 | 1000147065 | | 6,00 ST | DISTANZSTÜCK | DISTANCE PIECE | PIÈCE D'ÉCARTEMENT |
| 40 | 1000147064 | | 6,00 ST | SCHEIBE | WASHER | RONDELLE |
| 41 | 1000144105 | | 1,00 ST | VERKLEIDUNGSBLECH | TRIM PLATE | TÔLE DE RÉVÊTEMENT |
| 42 | 1000020553 | | 4,00 ST | 6KT-SCHRAUBE | HEX SCREW | VIS À TÊTE HEXAGONALE |
| 43 | 1000049283 | | 4,00 ST | LAGERSCHEIBE | BEARINGDISC | DISQUE DE PALIER |
| 44 | 1000146866 | | 1,00 ST | TRITTLEISTE | STEP STRAP | LISTEL DE PAS |
| 45 | 1000015345 | | 4,00 ST | 6KT-SCHRAUBE | HEX SCREW | VIS À TÊTE HEXAGONALE |
| 46 | 1000092291 | | 4,00 ST | SCHEIBE | WASHER | RONDELLE |

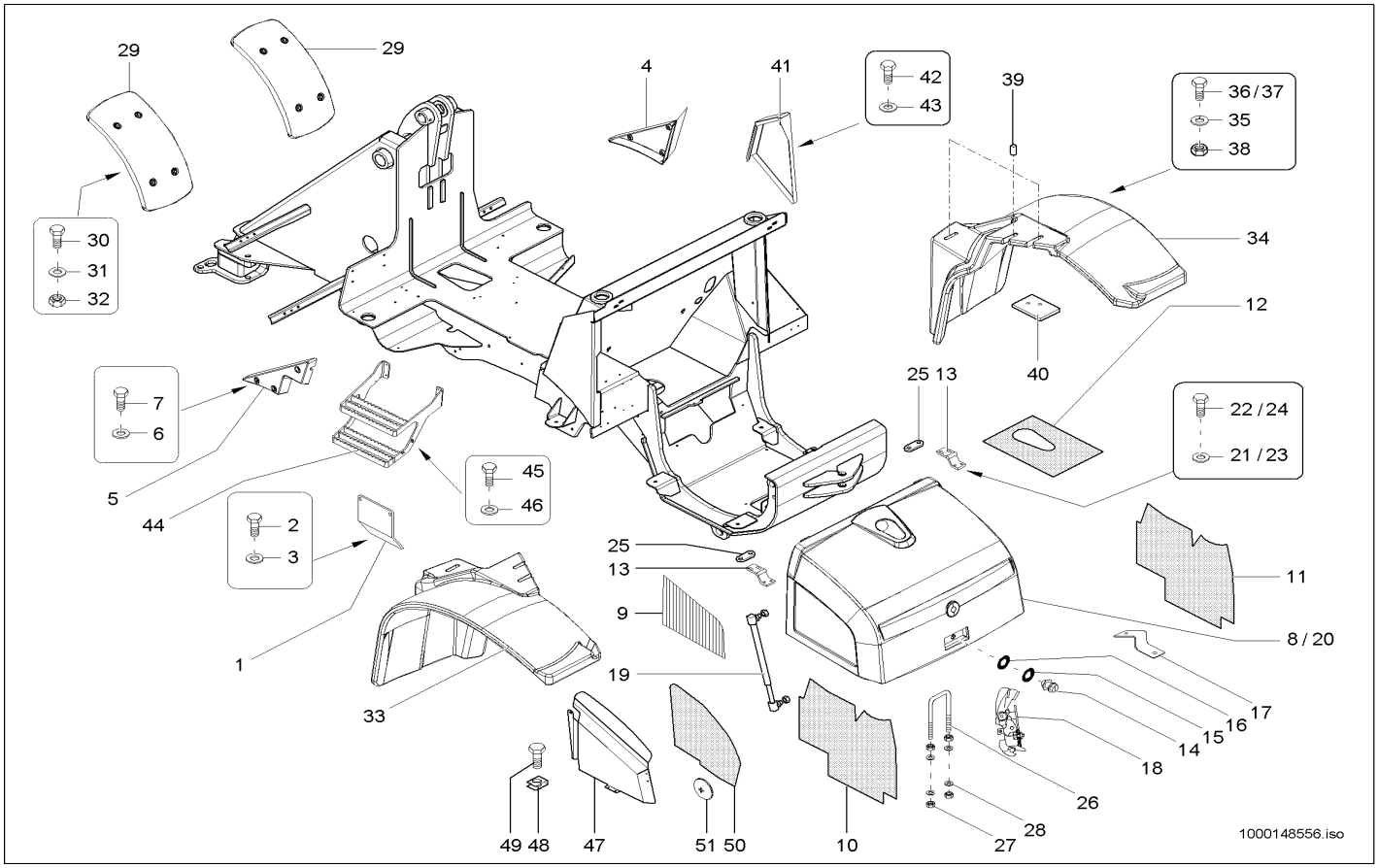


| Pos | Art.-Nr. | Anm. | Q'TY | BEZEICHNUNG | PART NAME | DESIGNATION |
|---|---|---|---|---|---|---|
| 47 | 1000150147 | | 1,00 ST | FÜHRUNGSBLECH | GUIDE PLATE | TÔLE DE GUIDAGE |
| 48 | 1000030414 | | 4,00 ST | BLECHMUTTER | NUT | ÉCROU DE TÔLE |
| 49 | 1000098708 | | 4,00 ST | SCHRAUBE | SCREW | VIS |
| 50 | 1000150379 | | 1,00 ST | DÄMMATTE | INSULATING MAT | TAPIS ISOLANT |
| 51 | 1000151036 | | 11,00 ST | CLIP | CLIP | CLIP |

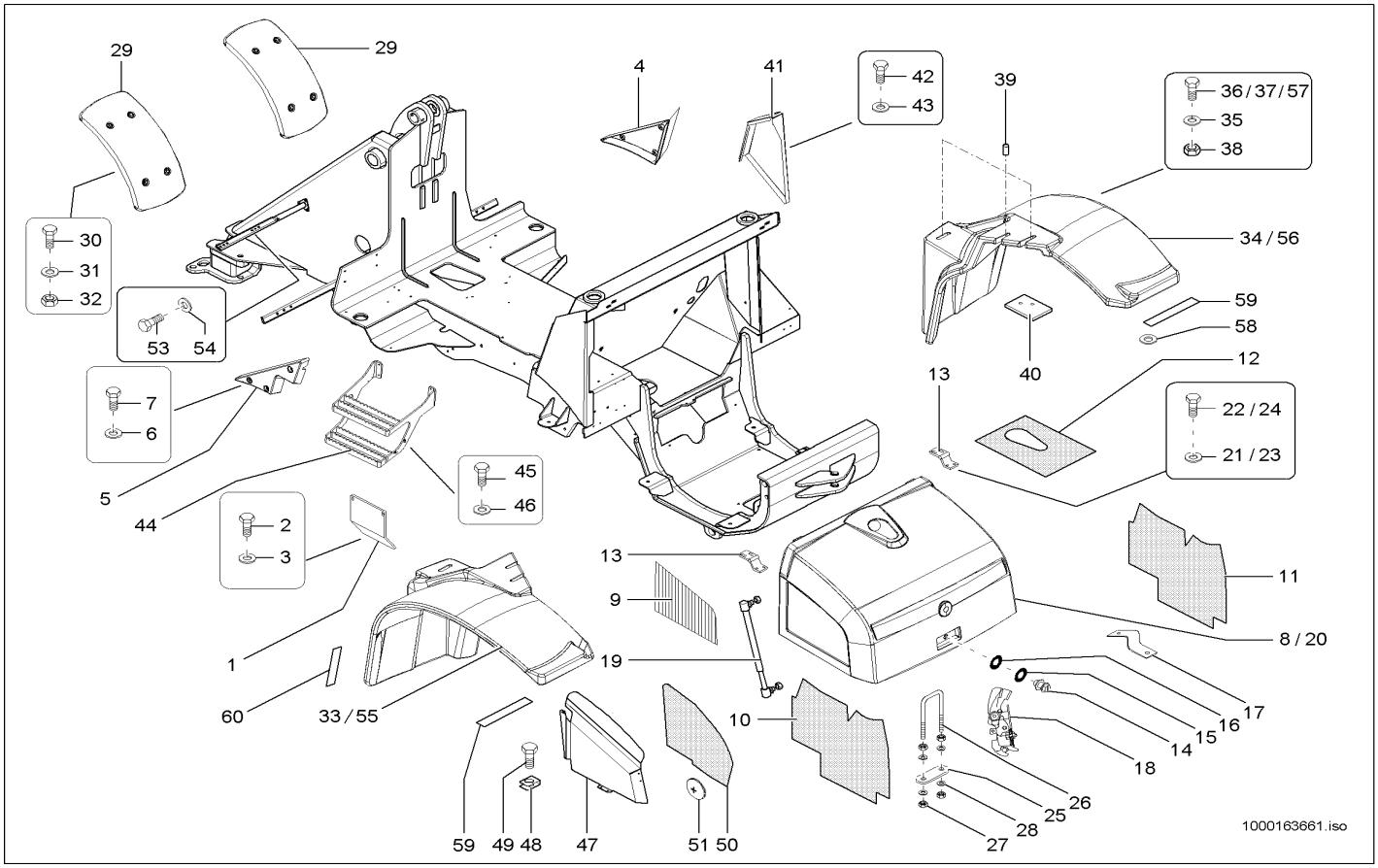


| Pos | Art.-Nr. | Anm. | Q'TY | BEZEICHNUNG | PART NAME | DESIGNATION |
|---|---|---|---|---|---|---|
| 1 | 1000132329 | | 1,00 ST | WARTUNGSDECKEL | MAINTENANCE COVER | COUVERTURE D'ENTRETIEN |
| 2 | 1000019136 | | 4,00 ST | 6KT-SCHRAUBE | HEX SCREW | VIS À TÊTE HEXAGONALE |
| 3 | 1000013027 | | 4,00 ST | SCHEIBE | WASHER | RONDELLE |
| 4 | 1000035453 | | 1,00 ST | VERKLEIDUNG | TRIM | RÉVÊTEMENT |
| 5 | 1000035452 | | 1,00 ST | VERKLEIDUNG | TRIM | RÉVÊTEMENT |
| 6 | 1000092290 | | 6,00 ST | SCHEIBE | WASHER | RONDELLE |
| 7 | 1000085382 | | 6,00 ST | 6KT-SCHRAUBE | HEX SCREW | VIS À TÊTE HEXAGONALE |
| 8 | 1000132382 | | 1,00 ST | MOTORHAUBE | ENGINE HOOD | CAPOT |
| 9 | 1000133858 | | 1,00 ST | GITTER | SCREEN | GRILLE |
| 10 | 1000137004 | li. | 1,00 ST | DÄMMATTE | INSULATING MAT | NATTE ISOLANT |
| 11 | 1000137005 | re. | 1,00 ST | DÄMMATTE | INSULATING MAT | NATTE ISOLANT |
| 12 | 1000137006 | | 1,00 ST | DÄMMATTE | INSULATING MAT | NATTE ISOLANT |
| 13 | 1000116629 | | 2,00 ST | SCHARNIER | HINGE | CHARNIÈRE |
| 14 | 1000100211 | | 1,00 ST | SCHLOSS | LOCK | FERMOIR |
| 15 | 1000100028 | | 1,00 ST | SCHEIBE | WASHER | RONDELLE |
| 16 | 1000100220 | | 1,00 ST | DISTANZSTÜCK | DISTANCE PIECE | PIÈCE D'ÉCARTEMENT |
| 17 | 1000100222 | | 1,00 ST | TASTER | FEELER | PALPEUR |
| 18 | 1000086541 | | 1,00 ST | SCHLOSS | LOCK | FERMOIR |
| 19 | 1000000997 | | 1,00 ST | GASFEDER | GAS STRUT | RESSORT DE GAZ |
| 20 | 1000097173 | | 4,00 M | PROFIL | PROFILE | PROFIL |
| 21 | 1000015431 | | 4,00 ST | SCHEIBE | WASHER | RONDELLE |
| 22 | 1000019136 | | 4,00 ST | 6KT-SCHRAUBE | HEX SCREW | VIS À TÊTE HEXAGONALE |
| 23 | 1000095341 | | 8,00 ST | SCHEIBE | WASHER | RONDELLE |
| 24 | 1000015343 | | 4,00 ST | 6KT-SCHRAUBE | HEX SCREW | VIS À TÊTE HEXAGONALE |
| 25 | 1000125758 | | 2,00 ST | GEWINDEPLATTE | THREAD PLATE | PLAQUE FILETÉE |
| 26 | 1000035444 | | 1,00 ST | BÜGEL | HOLDER | ARCHET |
| 27 | 1000013021 | | 4,00 ST | 6KT-MUTTER | HEXAGON NUT | ÉCROU HEXAGONAL |
| 28 | 1000015431 | | 4,00 ST | SCHEIBE | WASHER | RONDELLE |
| 29 | 1000163083 | | 2,00 ST | RADABDECKUNG | WHEEL COVER | COUVERCLE ROUES |
| 30 | 1000085412 | | 8,00 ST | 6KT-SCHRAUBE | HEX SCREW | VIS À TÊTE HEXAGONALE |
| 31 | 1000092303 | | 16,00 ST | SCHEIBE 10,5 ST A2C | WASHER 10,5 ST A2C | RONDELLE 10,5 ST A2C |
| 32 | 1000015408 | | 8,00 ST | 6KT-MUTTER | HEXAGON NUT | ÉCROU HEXAGONAL |
| 33 | 1000141787 | li.A:347010278 | 1,00 ST | RADABDECKUNG | WHEEL COVER | COUVERCLE ROUES |
| 34 | 1000141788 | re.A:347010278 | 1,00 ST | RADABDECKUNG | WHEEL COVER | COUVERCLE ROUES |
| 35 | 1000015431 | | 10,00 ST | SCHEIBE | WASHER | RONDELLE |
| 36 | 1000015402 | M8x65 A:347010278 | 2,00 ST | 6KT-SCHRAUBE | HEX SCREW | VIS À TÊTE HEXAGONALE |
| 37 | 1000085319 | M8x80 A:347010278 | 4,00 ST | 6KT-SCHRAUBE | HEX SCREW | VIS À TÊTE HEXAGONALE |
| 38 | 1000013022 | | 4,00 ST | 6KT-MUTTER | HEXAGON NUT | ÉCROU HEXAGONAL |
| 39 | 1000147065 | | 6,00 ST | DISTANZSTÜCK | DISTANCE PIECE | PIÈCE D'ÉCARTEMENT |
| 40 | 1000147064 | A:347010278 | 6,00 ST | SCHEIBE | WASHER | RONDELLE |
| 41 | 1000144105 | | 1,00 ST | VERKLEIDUNGSBLECH | TRIM PLATE | TÔLE DE RÉVÊTEMENT |
| 42 | 1000020553 | | 4,00 ST | 6KT-SCHRAUBE | HEX SCREW | VIS À TÊTE HEXAGONALE |
| 43 | 1000049283 | | 4,00 ST | LAGERSCHEIBE | BEARINGDISC | DISQUE DE PALIER |
| 44 | 1000146866 | | 1,00 ST | TRITTLEISTE | STEP STRAP | LISTEL DE PAS |
| 45 | 1000015345 | | 4,00 ST | 6KT-SCHRAUBE | HEX SCREW | VIS À TÊTE HEXAGONALE |

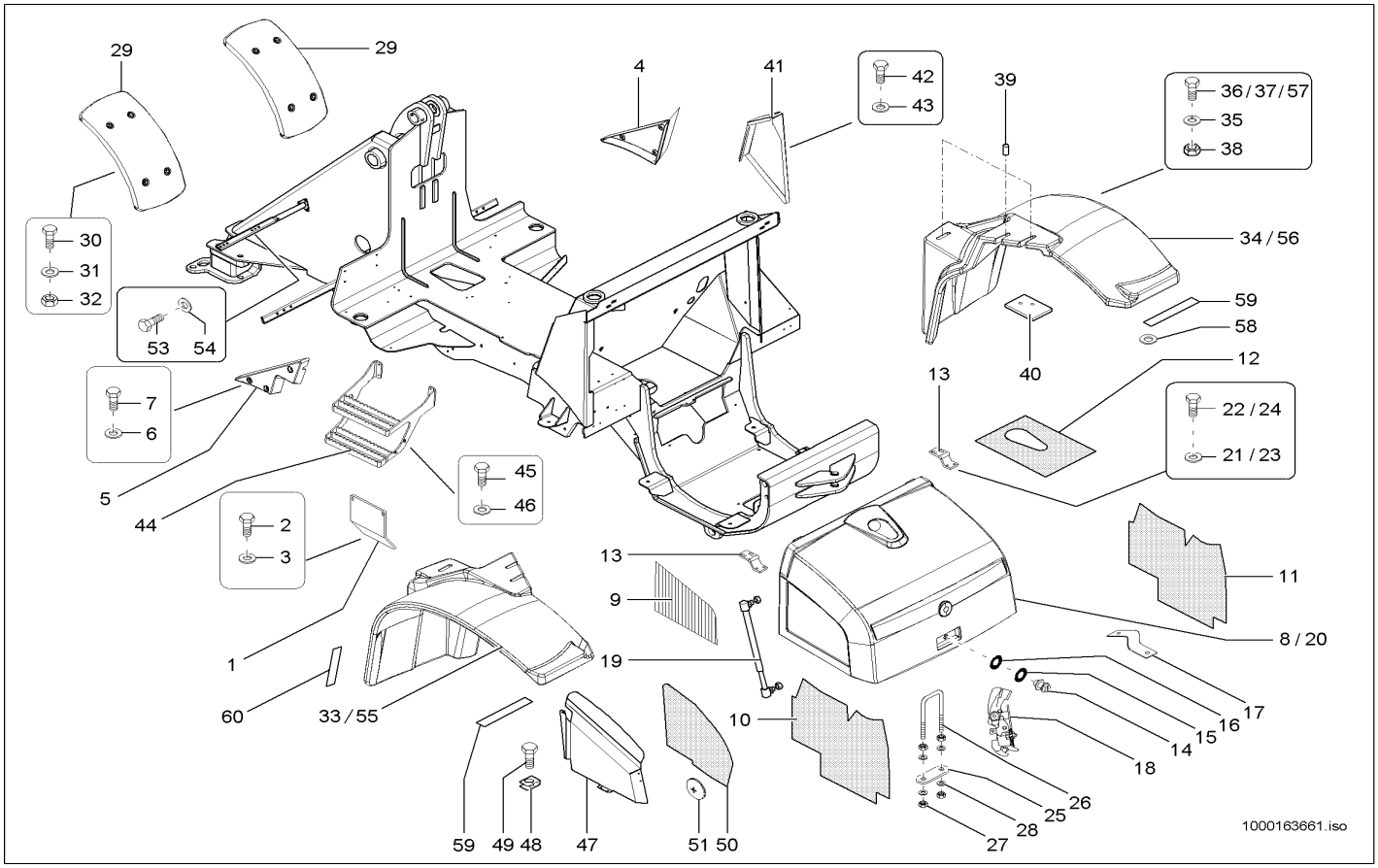


| Pos | Art.-Nr. | Anm. | Q'TY | BEZEICHNUNG | PART NAME | DESIGNATION |
|---|---|---|---|---|---|---|
| 46 | 1000092291 | | 4,00 ST | SCHEIBE | WASHER | RONDELLE |
| 47 | 1000150147 | | 1,00 ST | FÜHRUNGSBLECH | GUIDE PLATE | TÔLE DE GUIDAGE |
| 48 | 1000030414 | | 4,00 ST | BLECHMUTTER | NUT | ÉCROU DE TÔLE |
| 49 | 1000098708 | | 4,00 ST | SCHRAUBE | SCREW | VIS |
| 50 | 1000150379 | | 1,00 ST | DÄMMATTE | INSULATING MAT | TAPIS ISOLANT |
| 51 | 1000151036 | | 11,00 ST | CLIP | CLIP | CLIP |
| 52 | 1000161848 | | 4,00 ST | HALTER | BRACKET CLUTCH | SUPPORT |
| 53 | 1000013009 | | 16,00 ST | 6KT-SCHRAUBE | HEX SCREW | VIS À TÊTE HEXAGONALE |
| 54 | 1000092303 | | 16,00 ST | SCHEIBE 10,5 ST A2C | WASHER 10,5 ST A2C | RONDELLE 10,5 ST A2C |
| 55 | 1000166383 | li.E:347010279 | 1,00 ST | RADABDECKUNG | WHEEL COVER | COUVERCLE ROUES |
| 56 | 1000166384 | re.E:347010279 | 1,00 ST | RADABDECKUNG | WHEEL COVER | COUVERCLE ROUES |
| 57 | 1000085317 | M8x55 E:347010279 | 6,00 ST | 6KT-SCHRAUBE | HEX SCREW | VIS À TÊTE HEXAGONALE |
| 58 | 1000171392 | E:347010279 | 6,00 ST | SCHEIBE | WASHER | RONDELLE |
| 59 | 1000097033 | E:347010279 | 0,20 M | GUMMIBAND | RUBBER STRIP | ÉLASTIQUE |
| 60 | 1000097033 | E:347010279 | 0,10 M | GUMMIBAND | RUBBER STRIP | ÉLASTIQUE |

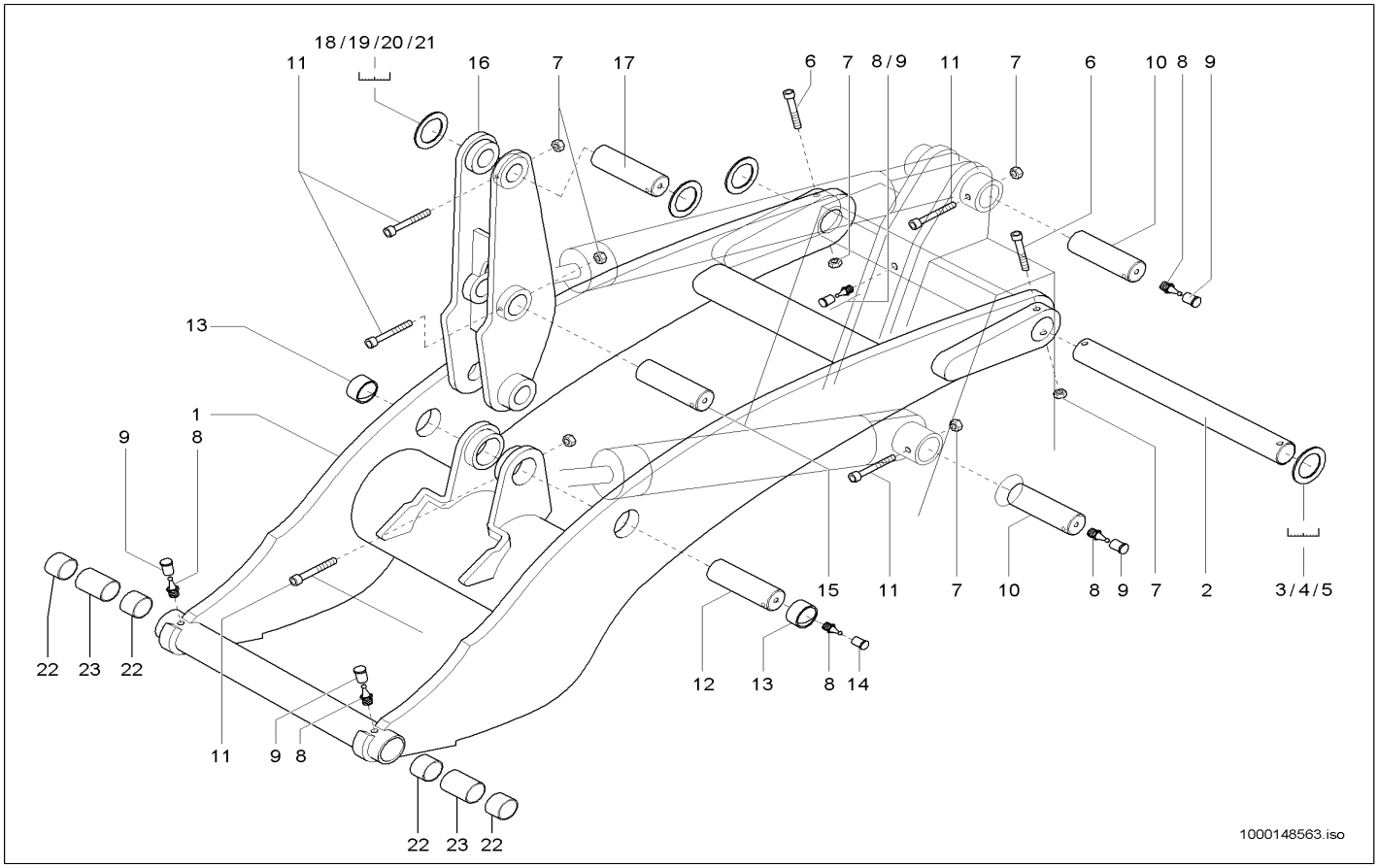


| Pos | Art.-Nr. | Anm. | Q'TY | BEZEICHNUNG | PART NAME | DESIGNATION |
|---|---|---|---|---|---|---|
| 1 | 1000101319 | | 1,00 ST | HUBRAHMEN | LIFT FRAME | CADRE DE LEVAGE |
| 2 | 1000051807 | | 1,00 ST | BOLZEN | PIN | AXE |
| 3 | 1000090581 | 4,0 | 2,00 ST | EINSTELLSCHEIBE | DISC | DISQUE |
| 4 | 1000106735 | 2,0 | 2,00 ST | EINSTELLSCHEIBE | DISC | DISQUE |
| 5 | 1000106736 | 3,0 | 2,00 ST | EINSTELLSCHEIBE | DISC | DISQUE |
| 6 | 1000048237 | | 2,00 ST | ZYLINDERSCHRAUBE | CHEESE HEAD SCREW | VIS A TETE CYLINDRIQUE |
| 7 | 1000015408 | | 7,00 ST | 6KT-MUTTER | HEXAGON NUT | ÉCROU HEXAGONAL |
| 8 | 1000050469 | | 6,00 ST | SCHMIERNIPPEL | GREASE NIPPLE | GRAISSEUR À BILLE |
| 9 | 1000033455 | | 5,00 ST | KAPPE | CAP | BOUCHON |
| 10 | 1000144695 | | 2,00 ST | BOLZEN | PIN | AXE |
| 11 | 1000048187 | | 5,00 ST | ZYLINDERSCHRAUBE | CHEESE HEAD SCREW | VIS A TETE CYLINDRIQUE |
| 12 | 1000051816 | | 1,00 ST | BOLZEN | PIN | AXE |
| 13 | 1000101318 | | 2,00 ST | BUCHSE | BUSHING | BAGUE |
| 14 | 1000033442 | | 2,00 ST | KAPPE | CAP | BOUCHON |
| 15 | 1000051815 | | 1,00 ST | BOLZEN | PIN | AXE |
| 16 | 1000051786 | | 1,00 ST | KIPPHEBEL | ROCKER ARM | BRAS DE CULBUTEUR |
| 17 | 1000051814 | | 1,00 ST | BOLZEN | PIN | AXE |
| 18 | 1000090623 | 1,0 | 2,00 ST | EINSTELLSCHEIBE | DISC | DISQUE |
| 19 | 1000090624 | 2,0 | 2,00 ST | EINSTELLSCHEIBE | DISC | DISQUE |
| 20 | 1000090626 | 3,0 | 2,00 ST | EINSTELLSCHEIBE | DISC | DISQUE |
| 21 | 1000090628 | 4,0 | 2,00 ST | EINSTELLSCHEIBE | DISC | DISQUE |
| 22 | 1000099085 | | 4,00 ST | BUCHSE | BUSHING | BAGUE |
| 23 | 1000090725 | | 2,00 ST | DISTANZROHR | PIPE | TUBE D'ÉCARTEMENT |

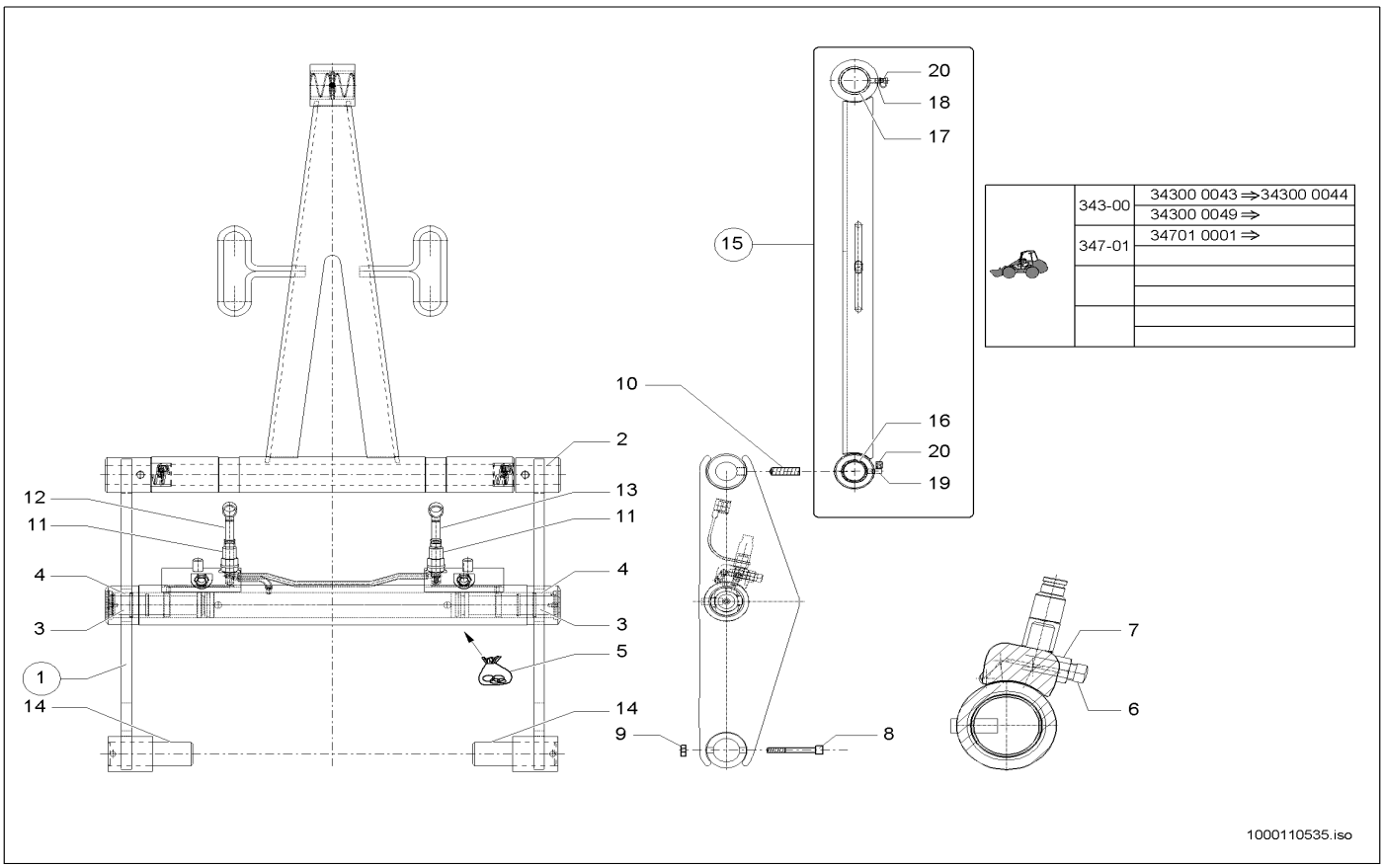


| | | |
|---|---|---|
| 343-00 | 34300 0043 ⇒34300 0044 | |
| | 34300 0049 ⇒ | |
| 347-01 | 34701 0001 ⇒ | |
| | | |
| | | |
| | | |
| | | |

| Pos | Art.-Nr. | Anm. | Q'TY | BEZEICHNUNG | PART NAME | DESIGNATION |
|---|---|---|---|---|---|---|
| 1 | 1000051787 | | 1,00 ST | SCHNELLWECHSELPLATTE KPL. | QUICKHITCH FACILITY KPL. | DISP. ATTACHE RAPIDE KPL. |
| 2 | 1000051817 | | 1,00 ST | BOLZEN | PIN | AXE |
| 3 | 1000037123 | | 2,00 ST | KOLBENSTANGE | PISTON ROD | TIGE DE PISTON |
| 4 | 1000051112 | | 2,00 ST | FÜHRUNGSROHR | GUIDE TUBE | TUBE GUIDE |
| 5 | 1000105444 | | 2,00 ST | DICHTSATZ | SEAL KIT | POCHETTE DE JOINTS |
| 6 | 1000032955 | | 2,00 ST | ANSCHLAG | LIMIT STOP | BATTÉE |
| 7 | 1000048990 | | 2,00 ST | 6KT-MUTTER | HEXAGON NUT | ÉCROU HEXAGONAL |
| 8 | 1000013015 | | 2,00 ST | ZYLINDERSCHRAUBE | CHEESE HEAD SCREW | VIS A TETE CYLINDRIQUE |
| 9 | 1000015408 | | 2,00 ST | 6KT-MUTTER | HEXAGON NUT | ÉCROU HEXAGONAL |
| 10 | 1000032970 | | 2,00 ST | GEWINDESTIFT | THREAD PIN | GOUPILLE FILETÉE |
| 11 | 1000020859 | | 2,00 ST | SCHNELLVERSCHLUßKUPPLUNG | QUICK LOCK COUPLING | COUPLEUR À FERMETURE RAPIDE |
| 12 | 1000020860 | rot / red / rouge | 1,00 ST | STAUBKAPPE | DUST CAP | BONNET À POUSSIÈRE |
| 13 | 1000020861 | blau / blue / bleu | 1,00 ST | STAUBKAPPE | DUST CAP | BONNET À POUSSIÈRE |
| 14 | 1000035541 | | 2,00 ST | BOLZEN | PIN | AXE |
| 15 | 1000051788 | | 1,00 ST | KIPPSTANGE | TILT ROD | BARRE DE CAVAGE |
| 16 | 1000032690 | | 2,00 ST | BUCHSE | BUSHING | BAGUE |
| 17 | 1000052663 | | 2,00 ST | EINSPANNBUCHSE | BUSHING | BAGUE |
| 18 | 1000050469 | | 1,00 ST | SCHMIERNIPPEL | GREASE NIPPLE | GRAISSEUR À BILLE |
| 19 | 1000050471 | | 2,00 ST | SCHMIERNIPPEL | GREASE NIPPLE | GRAISSEUR À BILLE |
| 20 | 1000033455 | | 3,00 ST | KAPPE | CAP | BOUCHON |

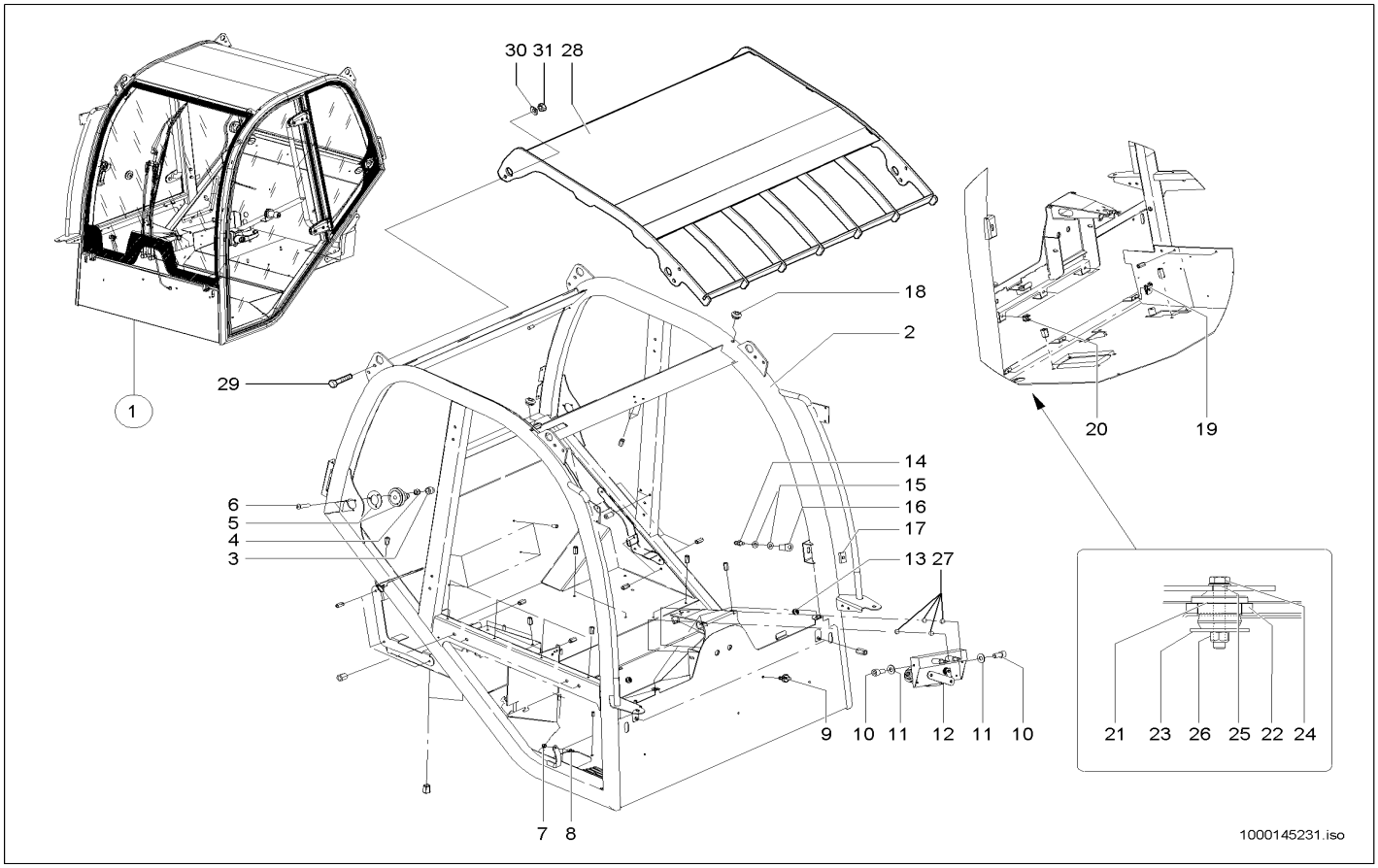


| Pos | Art.-Nr. | Anm. | Q'TY | BEZEICHNUNG | PART NAME | DESIGNATION |
|---|---|---|---|---|---|---|
| 1 | 1000134367 | | 1,00 ST | FAHRERKABINE KPL. | CAB KPL. | CABINE KPL. |
| 2 | 1000145044 | | 1,00 ST | RAHMEN | FRAME | CADRE |
| 3 | 1000099008 | | 3,00 ST | STOPFEN | PLUG | BOUCHON |
| 4 | 1000099007 | | 3,00 ST | MUTTER | NUT | ÉCROU |
| 5 | 1000098352 | | 1,00 ST | TÜRFESTSTELLER | DOOR FASTENER | COMPAS DE PORTE |
| 6 | 1000109048 | | 3,00 ST | SCHRAUBE | SCREW | VIS |
| 7 | 1000098998 | | 1,00 ST | KONTERMUTTER | COUNTER NUT | CONTRE-ÉCROU |
| 8 | 1000099031 | | 1,00 ST | KUGELZAPFEN | BALL PLUG | TOURILLON À BILLE |
| 9 | 1000099072 | | 1,00 ST | WINKEL | ANGLE | ANGLE |
| 10 | 1000145049 | | 2,00 ST | SCHRAUBE | SCREW | VIS |
| 11 | 1000098997 | | 2,00 ST | SCHEIBE | WASHER | RONDELLE |
| 12 | 1000109266 | | 1,00 ST | WISCHERMOTOR | WIPER MOTOR | MOTEUR D'ESTOMPE |
| 13 | 1000099073 | | 2,00 ST | TÜLLE | SLEEVE | BEC |
| 14 | 1000099048 | | 1,00 ST | SCHLIEßBOLZEN | CATCH BOLT | AXE DE FERMETURE |
| 15 | 1000099040 | | 2,00 ST | SCHEIBE | WASHER | RONDELLE |
| 16 | 1000099024 | | 1,00 ST | HALTER | BRACKET CLUTCH | SUPPORT |
| 17 | 1000099014 | | 1,00 ST | PLATTE | PLATE | PLAQUE |
| 18 | 1000099074 | | 2,00 ST | TÜLLE | SLEEVE | BEC |
| 19 | 1000145051 | | 3,00 ST | MUTTER | NUT | ÉCROU |
| 20 | 1000145055 | | 3,00 ST | MUTTER | NUT | ÉCROU |
| 21 | 1000031901 | | 4,00 ST | LAGER | BEARING | PALIER |
| 22 | 1000143968 | | 4,00 ST | DICHTUNG | SEAL | JOINT D'ÉTANCHÉITÉ |
| 23 | 1000090230 | | 4,00 ST | SCHEIBE | WASHER | RONDELLE |
| 24 | 1000047301 | | 4,00 ST | 6KT-SCHRAUBE | HEX SCREW | VIS À TÊTE HEXAGONALE |
| 25 | 1000021001 | | 4,00 ST | SCHEIBE | WASHER | RONDELLE |
| 26 | 1000020788 | | 4,00 ST | 6KT-MUTTER | HEXAGON NUT | ÉCROU HEXAGONAL |
| 27 | 1000160408 | | 4,00 ST | DISTANZBUCHSE | BUSHING | BAGUE D'ÉCARTEMENT |
| 28 | 1000136273 | | 1,00 ST | FOPS-SCHUTZGITTER | FOPS SCREEN | GRILLE DE PROTECTION DE FOPS |
| 29 | 1000085419 | M 12x14 | 4,00 ST | 6KT-SCHRAUBE | HEX SCREW | VIS À TÊTE HEXAGONALE |
| 30 | 1000049219 | B 13 | 4,00 ST | SCHEIBE | WASHER | RONDELLE |
| 31 | 1000019657 | M 12 | 4,00 ST | 6KT-MUTTER | HEXAGON NUT | ÉCROU HEXAGONAL |

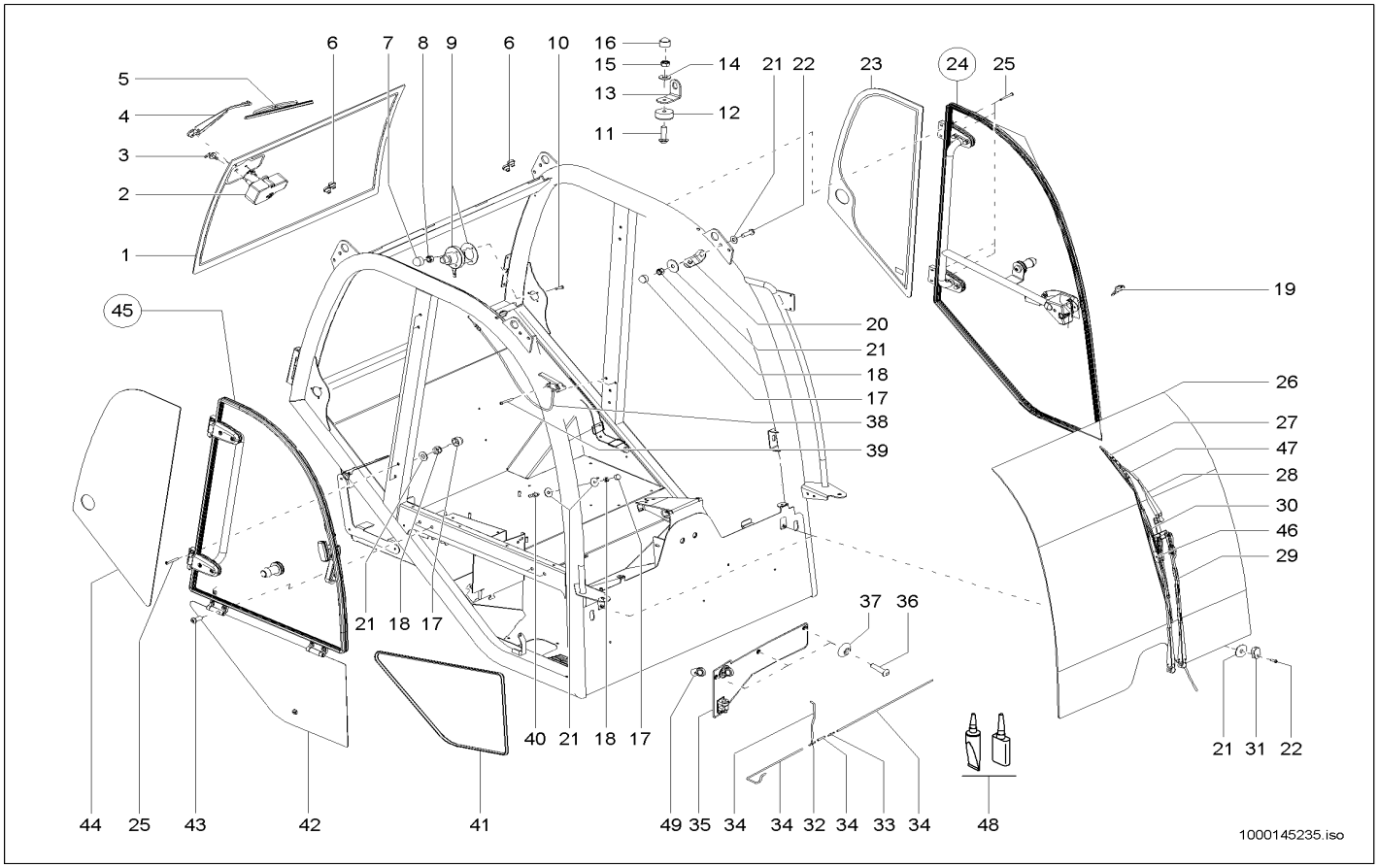


| Pos | Art.-Nr. | Anm. | Q'TY | BEZEICHNUNG | PART NAME | DESIGNATION |
|---|---|---|---|---|---|---|
| 1 | 1000143211 | | 1,00 ST | HECKSCHEIBE | REAR WINDOW | LUNETTE |
| 2 | 1000143223 | | 1,00 ST | WISCHERMOTOR | WIPER MOTOR | MOTEUR D'ESTOMPE |
| 3 | 1000099072 | | 1,00 ST | WINKEL | ANGLE | ANGLE |
| 4 | 1000098845 | | 1,00 ST | WISCHERARM | WIPER ARM | PORTE BALAI ESSUIE GLACE |
| 5 | 1000143221 | | 1,00 ST | WISCHERBLATT | WIPER BLADE | FEUILLET D'ESSUIE-GLACE |
| 6 | 1000099049 | | 4,00 ST | SCHRAUBE | SCREW | VIS |
| 7 | 1000099008 | | 3,00 ST | STOPFEN | PLUG | BOUCHON |
| 8 | 1000099007 | | 3,00 ST | MUTTER | NUT | ÉCROU |
| 9 | 1000109191 | | 1,00 ST | ARRETIERUNG | FIXING | FIXÉE |
| 10 | 1000109048 | | 3,00 ST | SCHRAUBE | SCREW | VIS |
| 11 | 1000145084 | | 2,00 ST | SCHRAUBE | SCREW | VIS |
| 12 | 1000099029 | | 2,00 ST | SCHEIBE | WASHER | RONDELLE |
| 13 | 1000145148 | | 2,00 ST | BLECH | PLATE | TÔLE |
| 14 | 1000145161 | | 2,00 ST | SCHEIBE | WASHER | RONDELLE |
| 15 | 1000145150 | | 2,00 ST | MUTTER | NUT | ÉCROU |
| 16 | 1000145181 | | 2,00 ST | STOPFEN | PLUG | BOUCHON |
| 17 | 1000098999 | | 11,00 ST | STOPFEN | PLUG | BOUCHON |
| 18 | 1000098998 | | 11,00 ST | KONTERMUTTER | COUNTER NUT | CONTRE-ÉCROU |
| 19 | 1000109234 | | 1,00 ST | SCHLÜSSEL | KEY | CLÉ |
| 20 | 1000145183 | | 2,00 ST | ARRETIERUNG | FIXING | FIXÉE |
| 21 | 1000098997 | | 16,00 ST | SCHEIBE | WASHER | RONDELLE |
| 22 | 1000109171 | | 4,00 ST | SCHRAUBE | SCREW | VIS |
| 23 | 1000143213 | | 1,00 ST | SEITENSCHEIBE | SIDE WINDOW | FENÊTRE LATÉRALE |
| 24 | 1000145184 | | 1,00 ST | TÜRE LI. KPL. | DOOR KPL. | PORTIÈRE KPL. |
| 25 | 1000145085 | | 8,00 ST | SCHRAUBE | SCREW | VIS |
| 26 | 1000143190 | | 1,00 ST | FRONTSCHEIBE | FRONT WINDOW | PARE-BRISE |
| 27 | 1000098848 | | 1,00 ST | WISCHERBLATT | WIPER BLADE | FEUILLET D'ESSUIE-GLACE |
| 28 | 1000109045 | | 1,00 ST | WISCHERARM | WIPER ARM | PORTE BALAI ESSUIE GLACE |
| 29 | 1000143220 | | 1,00 ST | WISCHERARM | WIPER ARM | PORTE BALAI ESSUIE GLACE |
| 30 | 1000098778 | | 1,00 ST | WISCHERBLATT | WIPER BLADE | FEUILLET D'ESSUIE-GLACE |
| 31 | 1000099022 | | 2,00 ST | HALTER | BRACKET CLUTCH | SUPPORT |
| 32 | 1000099046 | | 1,00 ST | T SCHLAUCH | T HOSE | T FLEXIBLE |
| 33 | 1000145436 | | 1,00 ST | VENTIL | VALVE | SOUPAPE |
| 34 | 1000134142 | | 5,00 M | SCHLAUCH | HOSE | TUYAU FLEXIBLE |
| 35 | 1000098849 | | 1,00 ST | WASSERBEHÄLTER | WATER CONTAINER | RÉSERVOIR D'EAU |
| 36 | 1000099067 | | 3,00 ST | SCHRAUBE | SCREW | VIS |
| 37 | 1000099012 | | 3,00 ST | KUNSTSTOFFSCHEIBE | SYTHETIC DISC | DISQUE EN PLASTIQUE |
| 38 | 1000145186 | | 1,00 ST | TÜRÖFFNER | DOOR OPENER | OUVREUR DE PORTE |
| 39 | 1000145086 | | 2,00 ST | SCHRAUBE | SCREW | VIS |
| 40 | 1000099032 | | 1,00 ST | KUGELZAPFEN | BALL PLUG | TOURILLON À BILLE |
| 41 | 1000145187 | | 1,00 ST | DICHTUNG | SEAL | JOINT D'ÉTANCHÉITÉ |
| 42 | 1000145188 | | 1,00 ST | KLAPPE | FLAP | CLAPET |
| 43 | 1000109255 | | 4,00 ST | SCHRAUBE | SCREW | VIS |
| 44 | 1000143212 | | 1,00 ST | SEITENSCHEIBE | SIDE WINDOW | FENÊTRE LATÉRALE |
| 45 | 1000145189 | | 1,00 ST | TÜRE RE. KPL. | DOOR KPL. | PORTIÈRE KPL. |
| 46 | 1000133220 | | 2,00 ST | DÜSE | NOZZLE | CLAPET |

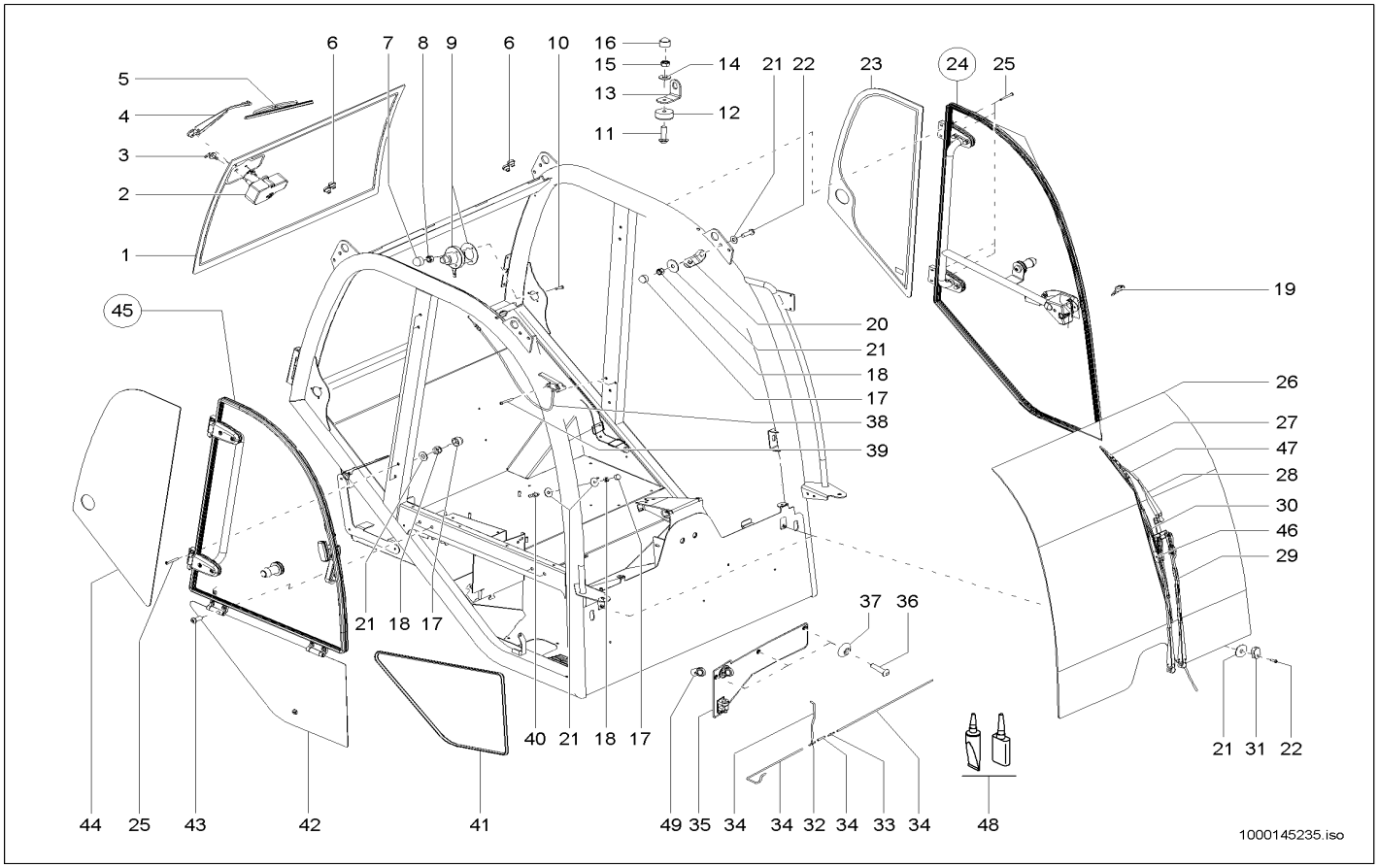


| Pos | Art.-Nr. | Anm. | Q'TY | BEZEICHNUNG | PART NAME | DESIGNATION |
|---|---|---|---|---|---|---|
| 47 | 1000133219 | | 1,00 ST | DÜSE | NOZZLE | CLAPET |
| 48 | 1000109257 | | 1,00 ST | KLEBSTOFF | DOOR KPL. | PORTIÈRE KPL. |
| 49 | 1000160409 | | 1,00 ST | STOPFEN | PLUG | BOUCHON |

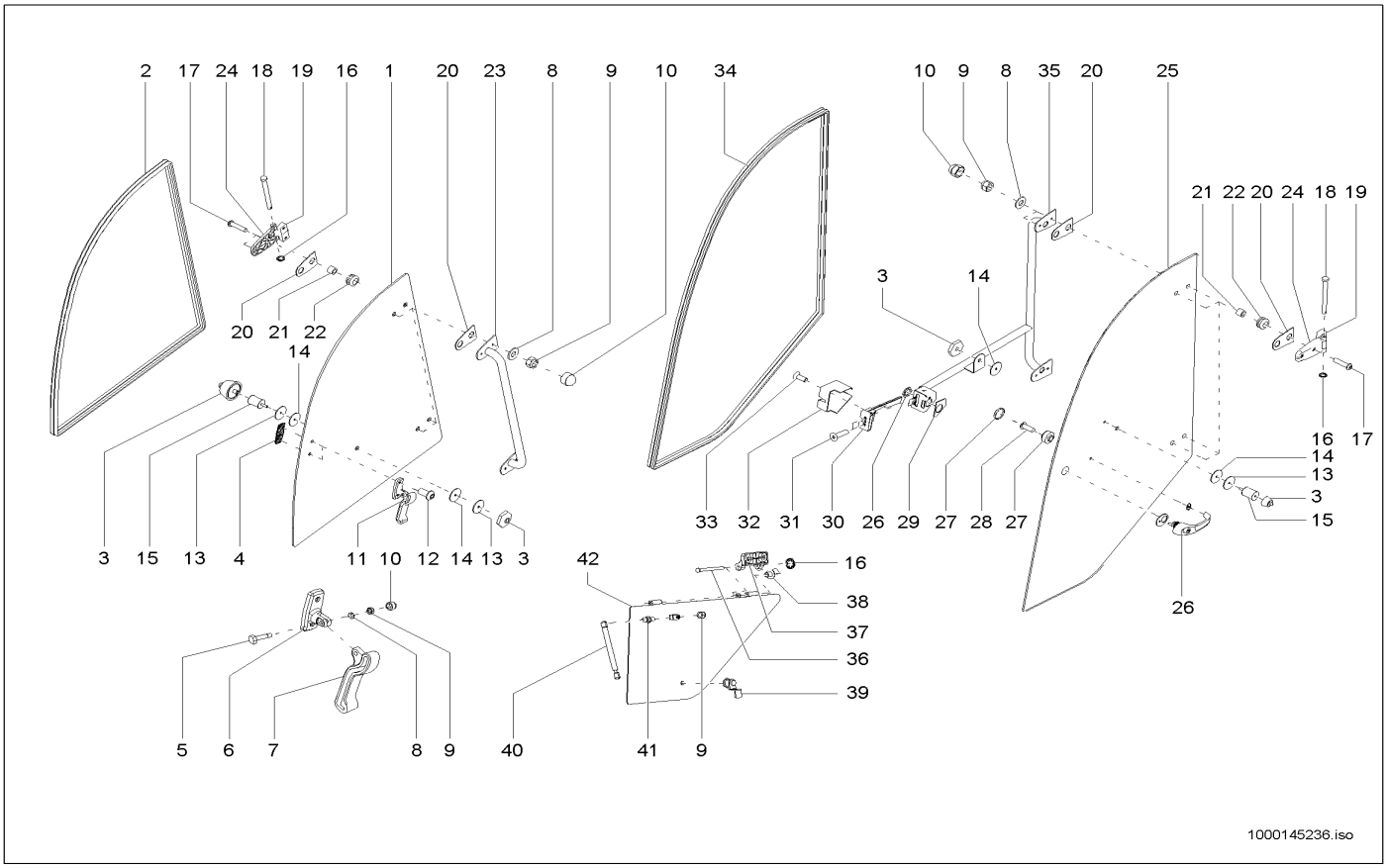


| Pos | Art.-Nr. | Anm. | Q'TY | BEZEICHNUNG | PART NAME | DESIGNATION |
|---|---|---|---|---|---|---|
| 1 | 1000143214 | | 1,00 ST | SEITENSCHEIBE | SIDE WINDOW | FENÊTRE LATÉRALE |
| 2 | 1000145071 | | 1,00 ST | DICHTUNG | SEAL | JOINT D'ÉTANCHÉITÉ |
| 3 | 1000145073 | | 2,00 ST | TÜRFESTSTELLER | DOOR FASTENER | COMPAS DE PORTE |
| 4 | 1000099004 | | 1,00 ST | HALTER | BRACKET | SUPPORT |
| 5 | 1000145074 | | 1,00 ST | SCHRAUBE | SCREW | VIS |
| 6 | 1000145075 | | 1,00 ST | HALTER | BRACKET CLUTCH | SUPPORT |
| 7 | 1000099002 | | 1,00 ST | HEBEL | LEVER | LEVIER |
| 8 | 1000098997 | | 9,00 ST | SCHEIBE | WASHER | RONDELLE |
| 9 | 1000098998 | | 10,00 ST | KONTERMUTTER | COUNTER NUT | CONTRE-ÉCROU |
| 10 | 1000098999 | | 9,00 ST | STOPFEN | PLUG | BOUCHON |
| 11 | 1000145076 | | 1,00 ST | TÜRFESTSTELLER | DOOR FASTENER | COMPAS DE PORTE |
| 12 | 1000145079 | | 2,00 ST | SCHRAUBE | SCREW | VIS |
| 13 | 1000145080 | | 3,00 ST | SCHEIBE | WASHER | RONDELLE |
| 14 | 1000145101 | | 4,00 ST | GUMMIPLATTE | RUBBER PLATE | PLAQUE EN CAOUTCHOUC |
| 15 | 1000145102 | | 2,00 ST | DISTANZBUCHSE | BUSHING | BAGUE D'ÉCARTEMENT |
| 16 | 1000099017 | | 6,00 ST | BEFESTIGUNG | MOUNTING | FIXATION |
| 17 | 1000109171 | | 8,00 ST | SCHRAUBE | SCREW | VIS |
| 18 | 1000109267 | | 4,00 ST | SPLINT | COTTERPIN | GOUPILLE |
| 19 | 1000145103 | | 4,00 ST | SCHARNIER | HINGE | CHARNIÈRE |
| 20 | 1000145104 | | 8,00 ST | GUMMIPLATTE | RUBBER PLATE | PLAQUE EN CAOUTCHOUC |
| 21 | 1000098991 | | 8,00 ST | DISTANZBUCHSE | BUSHING | BAGUE D'ÉCARTEMENT |
| 22 | 1000098992 | | 8,00 ST | TÜLLE | SLEEVE | BEC |
| 23 | 1000145105 | | 1,00 ST | HANDGRIFF | HANDLE | MANETTE |
| 24 | 1000145106 | | 4,00 ST | SCHARNIER | HINGE | CHARNIÈRE |
| 25 | 1000143215 | | 1,00 ST | TÜRSCHEIBE | DOOR WINDOW | DISQUE DE PORTE |
| 26 | 1000109189 | | 1,00 ST | HANDGRIFF | HANDLE | MANETTE |
| 27 | 1000109193 | | 1,00 ST | STOPFEN | PLUG | BOUCHON |
| 28 | 1000109192 | | 1,00 ST | SCHRAUBE | SCREW | VIS |
| 29 | 1000109190 | | 1,00 ST | HALTEPLATTE | FASTEN PLATE | PALQUE DE SOUTIEN |
| 30 | 1000109223 | | 1,00 ST | SCHLOSS | LOCK | FERMOIR |
| 31 | 1000109188 | | 2,00 ST | SCHRAUBE | SCREW | VIS |
| 32 | 1000109222 | | 1,00 ST | VERKLEIDUNG SCHLOSS | TRIM LOCK | RÉVÊTEMENT DE FERMOIR |
| 33 | 1000109186 | | 1,00 ST | SCHRAUBE | SCREW | VIS |
| 34 | 1000145072 | | 1,00 ST | DICHTUNG | SEAL | JOINT D'ÉTANCHÉITÉ |
| 35 | 1000145107 | | 1,00 ST | HANDGRIFF | HANDLE | MANETTE |
| 36 | 1000099033 | | 2,00 ST | STIFT | PIN | GOUPILLE |
| 37 | 1000145108 | | 2,00 ST | SCHARNIER | HINGE | CHARNIÈRE |
| 38 | 1000109233 | | 4,00 ST | RING | RING | ANNEAU |
| 39 | 1000145077 | | 1,00 ST | SCHLOSS | LOCK | FERMOIR |
| 40 | 1000145109 | | 1,00 ST | GASDRUCKFEDER | GAS STRUT | RESSORT DE PRESSION DE GAZ |
| 41 | 1000099031 | | 1,00 ST | KUGELZAPFEN | BALL PLUG | TOURILLON À BILLE |
| 42 | 1000145110 | | 1,00 ST | VERKLEIDUNG | TRIM | RÉVÊTEMENT |

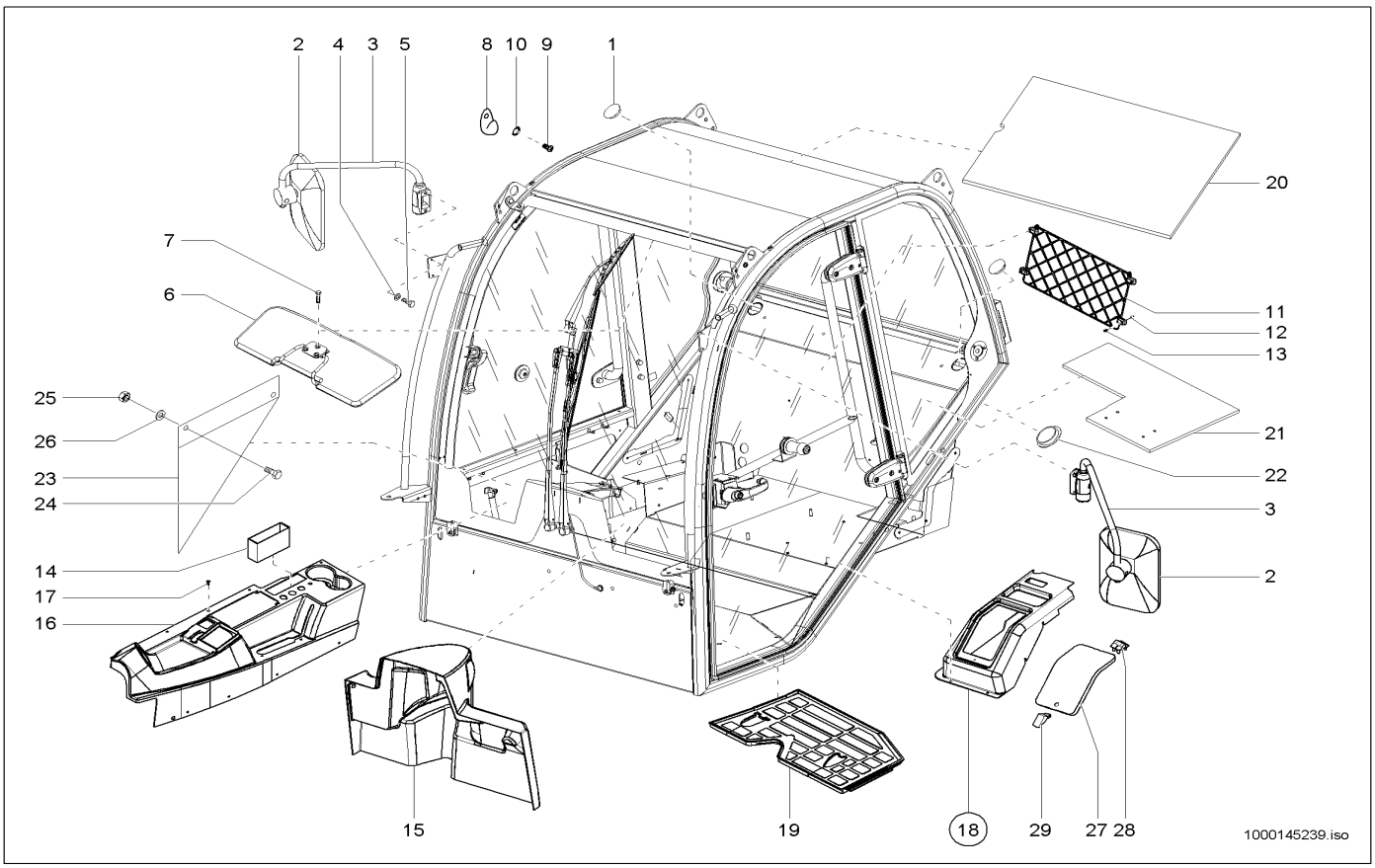


| Pos | Art.-Nr. | Anm. | Q'TY | BEZEICHNUNG | PART NAME | DESIGNATION |
|---|---|---|---|---|---|---|
| 1 | 1000138090 | | 2,00 ST | VERSCHLUSSDECKEL | LOCK COVER | COUVERCLE DE MÉCANISME DE FERMETURE |
| 2 | 1000029683 | | 2,00 ST | RÜCKBLICKSPIEGEL | REARVIEW MIRROR | RÉTROVISEUR |
| 3 | 1000116555 | | 2,00 ST | SPIEGELHALTER | MIRROR BRACKET | SUPPORT DE MIROIR |
| 4 | 1000085382 | | 4,00 ST | 6KT-SCHRAUBE | HEX SCREW | VIS À TÊTE HEXAGONALE |
| 5 | 1000092290 | | 4,00 ST | SCHEIBE | WASHER | RONDELLE |
| 6 | 1000052533 | | 1,00 ST | SONNENBLENDE | SUN VISOR | PARE-SOLEIL |
| 7 | 1000052670 | | 3,00 ST | SCHRAUBE | SCREW | VIS |
| 8 | 1000103167 | | 1,00 ST | GARDEROBENHAKEN | HOOK | PATÈRE |
| 9 | 1000048516 | | 1,00 ST | FLACHKOPFSCHRAUBE | FLAT HEAD SCREW | VIS DE TÊTE PLATE |
| 10 | 1000092288 | | 1,00 ST | SCHEIBE | WASHER | RONDELLE |
| 11 | 1000034772 | | 1,00 ST | NETZ | NET | RÉSEAU |
| 12 | 1000138091 | | 4,00 ST | DISTANZBUCHSE | BUSHING | BAGUE D'ÉCARTEMENT |
| 13 | 1000048484 | | 4,00 ST | SENKSCHRAUBE | SINKSCREW | VIS À TÊTE NOYÉE |
| 14 | 1000034773 | | 1,00 ST | ABLAGE | REST | SUPPORT |
| 15 | 1000133212 | | 1,00 ST | VERKLEIDUNG | TRIM | RÉVÊTEMENT |
| 16 | 1000133711 | | 1,00 ST | VERKLEIDUNG | TRIM | RÉVÊTEMENT |
| 17 | 1000052670 | | 24,00 ST | SCHRAUBE | SCREW | VIS |
| 18 | 1000101976 | | 1,00 ST | WERKZEUGKASTEN | TOOL BOX | BOÎTE À OUTILS |
| 19 | 1000139785 | | 1,00 ST | BODENMATTE | FLOOR RUBBER MAT | TAPIS DE SOL |
| 20 | 1000134369 | | 1,00 ST | DÄMMATTE | INSULATING MAT | TAPIS ISOLANT |
| 21 | 1000134370 | | 1,00 ST | DÄMMATTE | INSULATING MAT | NATTE ISOLANT |
| 22 | 1000089851 | | 1,00 ST | VERSCHLUSSSTOPFEN | LOCK PLUG | BOUCHON DE FERMETURE |
| 23 | 1000139653 | | 1,00 ST | GUMMIMATTE | RUBBER MAT | TAPIS EN CAOUTCHOUC |
| 24 | 1000085382 | | 2,00 ST | 6KT-SCHRAUBE | HEX SCREW | VIS À TÊTE HEXAGONALE |
| 25 | 1000085588 | | 2,00 ST | 6KT-MUTTER | HEXAGON NUT | ÉCROU HEXAGONAL |
| 26 | 1000049283 | | 2,00 ST | LAGERSCHEIBE | BEARINGDISC | DISQUE DE PALIER |
| 27 | 1000147882 | | 1,00 ST | DECKEL | COVER | COUVERCLE |
| 28 | 1000147883 | | 2,00 ST | SCHARNIER | HINGE | CHARNIÈRE |
| 29 | 1000147884 | | 1,00 ST | RIEGELVERSCHLUSS | CATCH | VERROU |

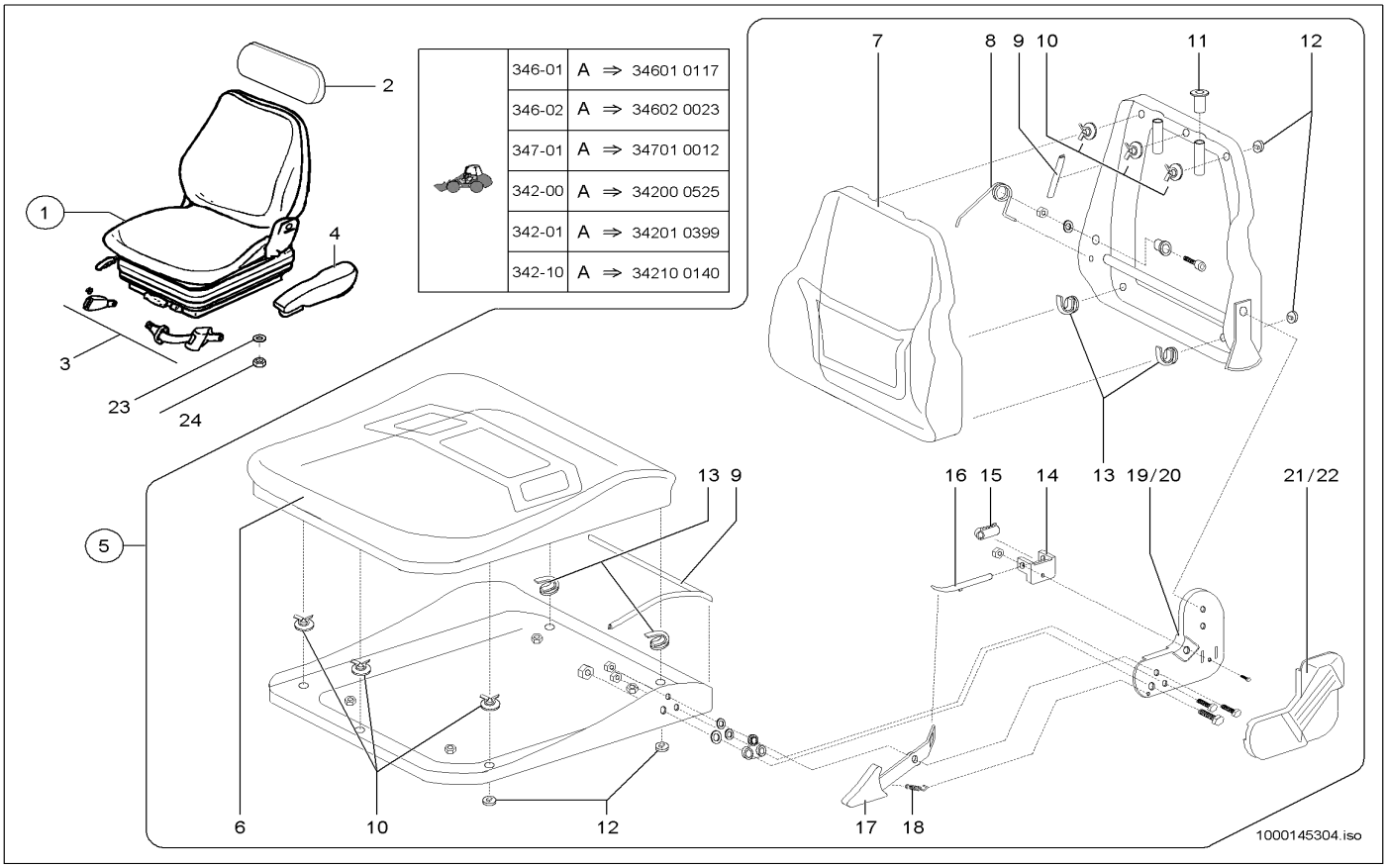


| | | | |
|---|---|---|---|
| 346-01 | A | ⇒ | 34601 0117 |
| 346-02 | A | ⇒ | 34602 0023 |
| 347-01 | A | ⇒ | 34701 0012 |
| 342-00 | A | ⇒ | 34200 0525 |
| 342-01 | A | ⇒ | 34201 0399 |
| 342-10 | A | ⇒ | 34210 0140 |

| Pos | Art.-Nr. | Anm. | Q'TY | BEZEICHNUNG | PART NAME | DESIGNATION |
|---|---|---|---|---|---|---|
| 1 | 1000116480 | | 1,00 ST | FAHRERSITZ | DRIVERS SEAT | SIÈGE DE CHAUFFEUR |
| 2 | 1000116482 | | 4,00 ST | RÜCKENVERLÄNGERUNG | BACK EXTENSION | PROLONGATION DE DOS |
| 3 | 1000050911 | | 1,00 ST | AUTOMATIKGURT | AUTOMATIC BELT | CEINTURE AUTOMATIQUE |
| 4 | 1000137188 | | 1,00 ST | ARMLEHNE | ARM REST | ACCOUDOIR |
| 5 | 1000129616 | | 1,00 ST | SITZOBERTEIL | SEAT UPPER PART | PARTIE SUPÉRIEURE DE SIÈGE |
| 6 | 1000129271 | | 1,00 ST | SITZPOLSTER | SEAT UPHOLSTERY | BOURRELET |
| 7 | 1000129273 | | 1,00 ST | RÜCKENPOLSTER | BACK CUSHION | COUSSIN À DOS |
| 8 | 1000129297 | | 1,00 ST | FEDER | SPRING | RESSORT |
| 9 | 1000129274 | | 2,00 ST | PROFIL | PROFILE | PROFIL |
| 10 | 1000129275 | | 6,00 ST | SICHERUNG | LOCKING | SÜRETÉ |
| 11 | 1000129284 | | 2,00 ST | TÜLLE | SLEEVE | BEC |
| 12 | 1000129280 | | 10,00 ST | ABDECKUNG | COVER | COUVERCLE |
| 13 | 1000129279 | | 4,00 ST | HAKEN | HOOK | CROCHET |
| 14 | 1000129292 | | 1,00 ST | HALTER | BRACKET CLUTCH | SUPPORT |
| 15 | 1000129294 | | 1,00 ST | ROLLE | ROLLER | ROULEAU |
| 16 | 1000129293 | | 1,00 ST | STIFT | PIN | GOUPILLE |
| 17 | 1000129295 | | 1,00 ST | HEBEL | LEVER | LEVIER |
| 18 | 1000129296 | | 1,00 ST | ZUGFEDER | TENSION SPRING | RESSORT DE TRACTION |
| 19 | 1000129285 | L | 1,00 ST | HALTER | BRACKET CLUTCH | SUPPORT |
| 20 | 1000129286 | R | 1,00 ST | HALTER | BRACKET CLUTCH | SUPPORT |
| 21 | 1000129287 | L | 1,00 ST | ABDECKUNG | COVER | COUVERCLE |
| 22 | 1000129288 | R | 1,00 ST | ABDECKUNG | COVER | COUVERCLE |
| 23 | 1000015431 | | 4,00 ST | SCHEIBE | WASHER | RONDELLE |
| 24 | 1000013021 | | 4,00 ST | 6KT-MUTTER | HEXAGON NUT | ÉCROU HEXAGONAL |

# FAHRERSITZ UNTERTEIL
# DRIVER SEAT LOWER PART
# SIÈGE DU CONDUCTEUR PARTIE INFÉRIEURE

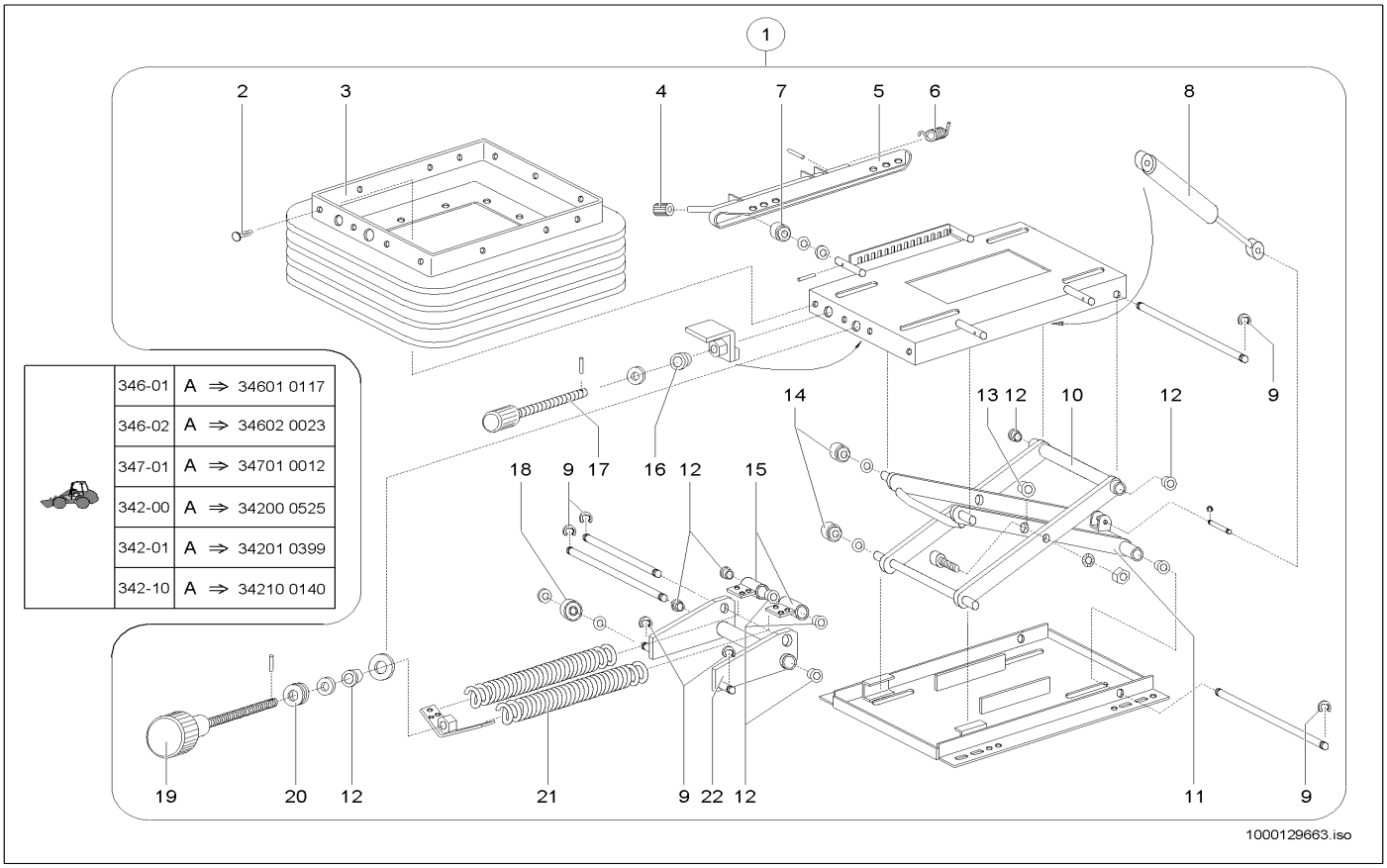


| | | |
|---|---|---|
| 346-01 | A ⇒ | 34601 0117 |
| 346-02 | A ⇒ | 34602 0023 |
| 347-01 | A ⇒ | 34701 0012 |
| 342-00 | A ⇒ | 34200 0525 |
| 342-01 | A ⇒ | 34201 0399 |
| 342-10 | A ⇒ | 34210 0140 |

| Pos | Art.-Nr. | Anm. | Q'TY | BEZEICHNUNG | PART NAME | DESIGNATION |
|---|---|---|---|---|---|---|
| 1 | 1000129606 | | 1,00 ST | FAHRERSITZ UNTERTEIL KPL. | OPERATOR'S SEAT LOWER PART KPL. | SIÈGE DU CONDUCTEUR PARTIE INFÉRIEURE KP |
| 2 | 1000129318 | | 22,00 ST | STOPFEN | PLUG | BOUCHON |
| 3 | 1000129317 | | 1,00 ST | FALTENBALG | BELLOW | SOUFFLET |
| 4 | 1000129310 | | 1,00 ST | HANDGRIFF | HANDLE | MANETTE |
| 5 | 1000129309 | kpl. | 2,00 ST | LÄNGSVERSTELLUNG | ADJUSTMENT | RÉGLAGE |
| 6 | 1000129337 | | 1,00 ST | FEDER | SPRING | RESSORT |
| 7 | 1000129336 | | 4,00 ST | FÜHRUNGSROLLE | GUIDE ROLLER | ROULEAU DE GUIDAGE |
| 8 | 1000129331 | | 1,00 ST | STOSSDÄMPFER | CHOCK ABSORBER | AMORTISSEUR |
| 9 | 1000129338 | | 8,00 ST | SICHERUNG | LOCKING | SÛRETÉ |
| 10 | 1000129301 | | 1,00 ST | SCHWINGE AUSSEN | LINKAGE | TRINGLERIE |
| 11 | 1000129302 | | 1,00 ST | SCHWINGE INNEN | LINKAGE | TRINGLERIE |
| 12 | 1000129314 | | 12,00 ST | LAGERBUCHSE | BEARING BUSH | BAGUE DE PALIER |
| 13 | 1000129312 | | 2,00 ST | LAGERBUCHSE | BEARING BUSH | BAGUE DE PALIER |
| 14 | 1000129315 | | 4,00 ST | FÜHRUNGSROLLE | GUIDE ROLLER | ROULEAU DE GUIDAGE |
| 15 | 1000129335 | kpl. | 1,00 ST | LAGERUNG | MOUNTING | STOCKAGE |
| 16 | 1000129313 | | 1,00 ST | LAGERBUCHSE | BEARING BUSH | BAGUE DE PALIER |
| 17 | 1000129333 | | 2,00 ST | GEWINDESPINDEL | SCREW PILLAR | PILIER DE VIS |
| 18 | 1000129332 | | 2,00 ST | KUGELLAGER | BALL BEARING | ROULEMENT À BILLES |
| 19 | 1000129311 | | 1,00 ST | SPINDEL | SPINDLE | FUSEAU |
| 20 | 1000129319 | | 1,00 ST | NADELLAGER | NEEDLE BEARING | PALIER À AIGUILLES |
| 21 | 1000129308 | | 2,00 ST | FEDER | SPRING | RESSORT |
| 22 | 1000129610 | kpl. | 1,00 ST | FEDERHEBEL | SPRING LEVER | LEVIER DE PLUME |

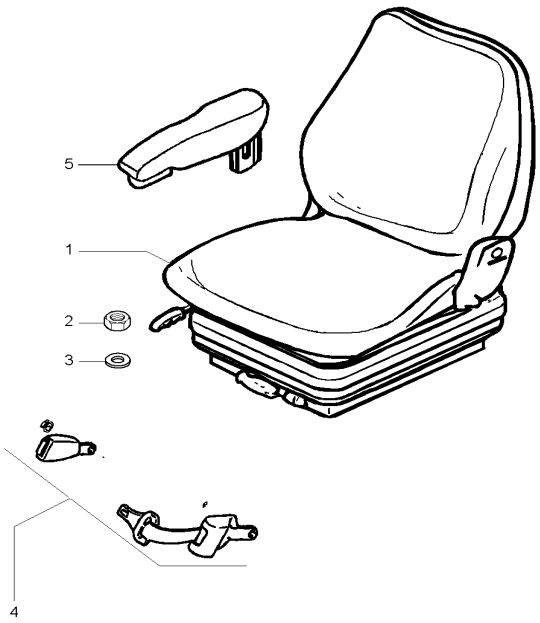


| | | |
|---|---|---|
| | 346-01 | E ⇒ 34601 0118 |
| | 346-02 | E ⇒ 34602 0024 |
| | 347-01 | E ⇒ 34701 0013 |
| | 342-00 | E ⇒ 34200 0526 |
| | 342-01 | E ⇒ 34201 0400 |
| | 342-10 | E ⇒ 34210 0141 |

1000147148.iso

| Pos | Art.-Nr. | Anm. | Q'TY | BEZEICHNUNG | PART NAME | DESIGNATION |
|---|---|---|---|---|---|---|
| 1 | 1000144758 | | 1,00 ST | FAHRERSITZ | DRIVERS SEAT | SIÈGE DE CHAUFFEUR |
| 2 | 1000013022 | | 4,00 ST | 6KT-MUTTER | HEXAGON NUT | ÉCROU HEXAGONAL |
| 3 | 1000015431 | | 4,00 ST | SCHEIBE | WASHER | RONDELLE |
| 4 | 1000098916 | | 1,00 ST | AUTOMATIKGURT | AUTOMATIC BELT | CEINTURE AUTOMATIQUE |
| 5 | 1000089492 | | 1,00 ST | ARMLEHNE | ARM REST | ACCOUDOIR |

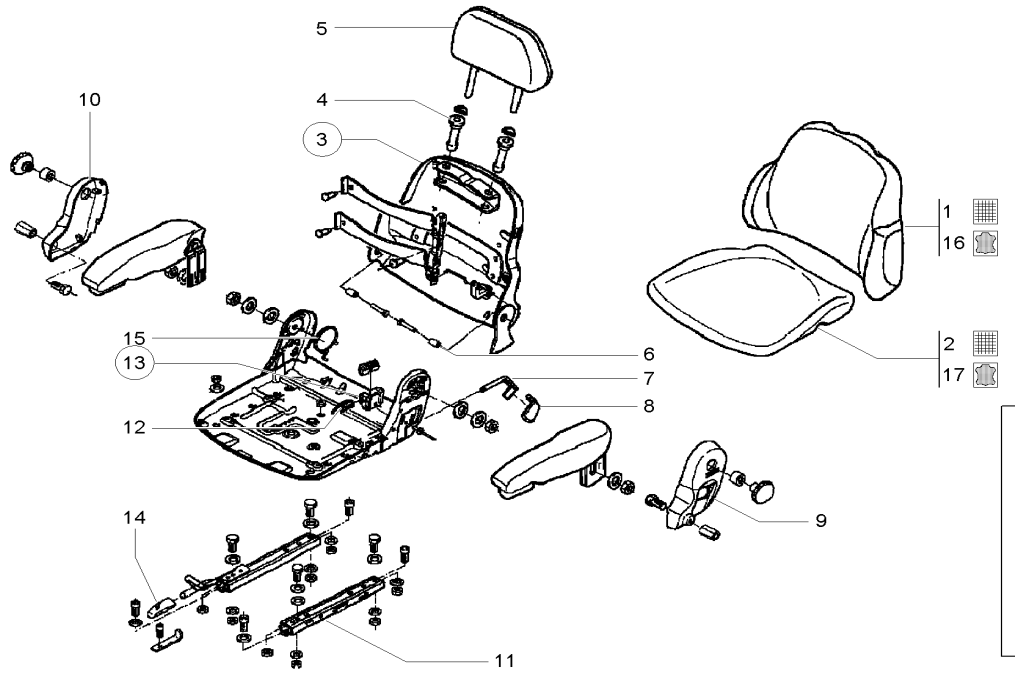


| | | |
|---|---|---|
| 346-01 | E ⇒ | 34601 0118 |
| 346-02 | E ⇒ | 34602 0024 |
| 347-01 | E ⇒ | 34701 0013 |
| 342-00 | E ⇒ | 34200 0526 |
| 342-01 | E ⇒ | 34201 0400 |
| 342-10 | E ⇒ | 34210 0141 |

10000147150.iso

| Pos | Art.-Nr. | Anm. | Q'TY | BEZEICHNUNG | PART NAME | DESIGNATION |
|---|---|---|---|---|---|---|
| 1 | 1000088411 | | 1,00 ST | RÜCKENPOLSTER | BACK CUSHION | COUSSIN À DOS |
| 2 | 1000084945 | | 1,00 ST | SITZPOLSTER | SEAT UPHOLSTERY | BOURRELET |
| 3 | 1000088410 | | 1,00 ST | RÜCKENTEIL | BACK PART | PART DORSALE |
| 4 | 1000073554 | | 2,00 ST | FÜHRUNGSHÜLSE | GUIDE SLEEVE | DOUILLE DE GUIDAGE |
| 5 | 1000073465 | | 1,00 ST | KOPFSTÜTZE | HEADREST | SUPPORT DE TÊTE |
| 6 | 1000088401 | | 2,00 ST | BUCHSE | BUSHING | BAGUE |
| 7 | 1000088409 | | 1,00 ST | HEBEL | LEVER | LEVIER |
| 8 | 1000088405 | | 1,00 ST | GRIFF | HANDLE | MANETTE |
| 9 | 1000147168 | | 1,00 ST | ABDECKUNG | COVER | COUVERCLE |
| 10 | 1000147170 | | 1,00 ST | ABDECKUNG | COVER | COUVERCLE |
| 11 | 1000102861 | | 1,00 ST | SCHIENE | RAIL | RAIL |
| 12 | 1000147172 | | 1,00 ST | FEDER | SPRING | RESSORT |
| 13 | 1000088404 | | 1,00 ST | LAGER | BEARING | PALIER |
| 14 | 1000147158 | | 1,00 ST | GRIFF | HANDLE | MANETTE |
| 15 | 1000147173 | | 1,00 ST | FEDER | SPRING | RESSORT |
| 16 | 1000154470 | Opt. | 1,00 ST | RÜCKENPOLSTER | BACK CUSHION | COUSSIN À DOS |
| 17 | 1000089496 | Opt. | 1,00 ST | SITZPOLSTER | SEAT UPHOLSTERY | BOURRELET |

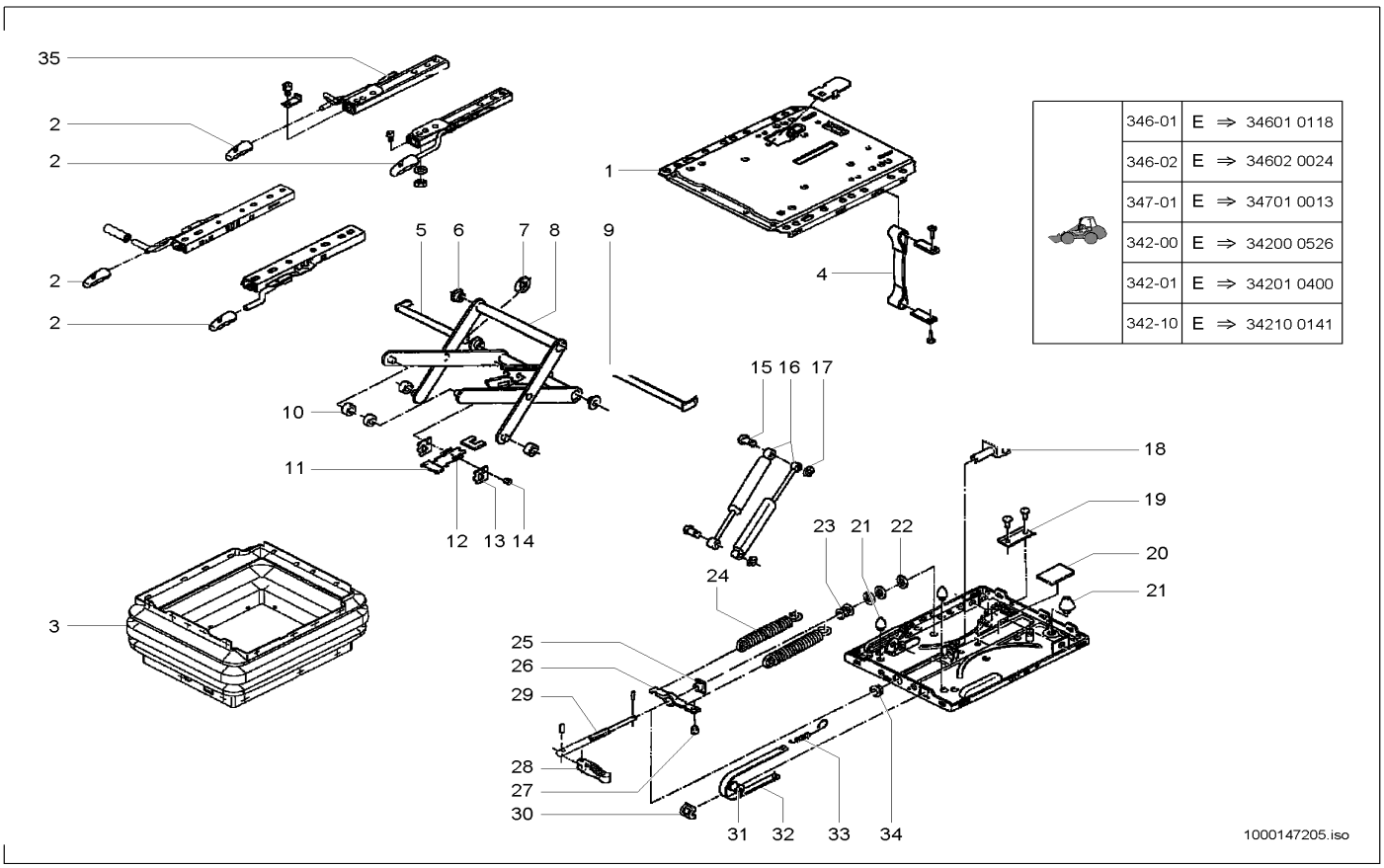


| Pos | Art.-Nr. | Anm. | Q'TY | BEZEICHNUNG | PART NAME | DESIGNATION |
|---|---|---|---|---|---|---|
| 1 | 1000147157 | | 1,00 ST | ABDECKUNG | COVER | COUVERCLE |
| 2 | 1000147158 | | 1,00 ST | GRIFF | HANDLE | MANETTE |
| 3 | 1000108144 | | 1,00 ST | FALTENBALG | BELLOW | SOUFFLET |
| 4 | 1000108189 | | 1,00 ST | BAND | STRIP | BANDE |
| 5 | 1000108187 | | 1,00 ST | BOLZEN | PIN | AXE |
| 6 | 1000032631 | | 4,00 ST | BUCHSE | BUSHING | BAGUE |
| 7 | 1000108188 | | 1,00 ST | SICHERUNG | LOCKING | SÛRETÉ |
| 8 | 1000086476 | | 1,00 ST | SCHWINGE | WING | BIELLE |
| 9 | 1000108184 | | 1,00 ST | BOLZEN | PIN | AXE |
| 10 | 1000036272 | | 4,00 ST | ROLLE | ROLLER | ROULEAU |
| 11 | 1000088395 | | 1,00 ST | LEISTE | STRAP | LISTEAU |
| 12 | 1000086480 | | 2,00 ST | ZUGFEDER | TENSION SPRING | RESSORT DE TRACTION |
| 13 | 1000088394 | | 2,00 ST | BLECH | PLATE | TÔLE |
| 14 | 1000088397 | | 1,00 ST | BOLZEN | PIN | AXE |
| 15 | 1000147160 | | 2,00 ST | BOLZEN | PIN | AXE |
| 16 | 1000147161 | | 1,00 ST | DÄMPFER | SHOCK ABSORBER | AMORTISSEUR |
| 17 | 1000147163 | | 2,00 ST | SICHERUNG | LOCKING | SÛRETÉ |
| 18 | 1000088162 | | 1,00 ST | GABEL | QUICK-HITCH-COUPLER | ATTACHE RAPIDE |
| 19 | 1000088163 | | 1,00 ST | PROFIL | PROFILE | PROFIL |
| 20 | 1000147164 | | 1,00 ST | GUMMIPLATTE | RUBBER PLATE | PLAQUE EN CAOUTCHOUC |
| 21 | 1000147165 | | 1,00 ST | PUFFER | BUFFER | BUTOIR |
| 22 | 1000088392 | | 1,00 ST | SCHEIBE | WASHER | RONDELLE |
| 23 | 1000108148 | | 1,00 ST | KUGELLAGER | BALL BEARING | ROULEMENT À BILLES |
| 24 | 1000030809 | | 2,00 ST | FEDER | SPRING | RESSORT |
| 25 | 1000117897 | | 1,00 ST | MUTTER | NUT | ÉCROU |
| 26 | 1000088391 | | 1,00 ST | FEDERBOCK | SPRING LODGING | SUPPORT DE RESSORT |
| 27 | 1000088396 | | 1,00 ST | STOPFEN | PLUG | BOUCHON |
| 28 | 1000086914 | | 1,00 ST | KNEBEL KPL. | HANDLE KPL. | GARROT KPL. |
| 29 | 1000088399 | | 1,00 ST | VERSTELLSPINDEL | DISPLAC SPINDLE | FUSEAU À DÉPLACER |
| 30 | 1000088160 | | 1,00 ST | FÜHRUNG | GUIDE | GUIDAGE |
| 31 | 1000088393 | | 1,00 ST | ROLLE | ROLLER | ROULEAU |
| 32 | 1000147166 | | 1,00 ST | ANZEIGEBAND | ANNOUNCEMENT | ANNONCE |
| 33 | 1000030818 | | 1,00 ST | FEDER | SPRING | RESSORT |
| 34 | 1000108183 | | 1,00 ST | RING | RING | ANNEAU |
| 35 | 1000102861 | | 1,00 ST | SCHIENE | RAIL | RAIL |

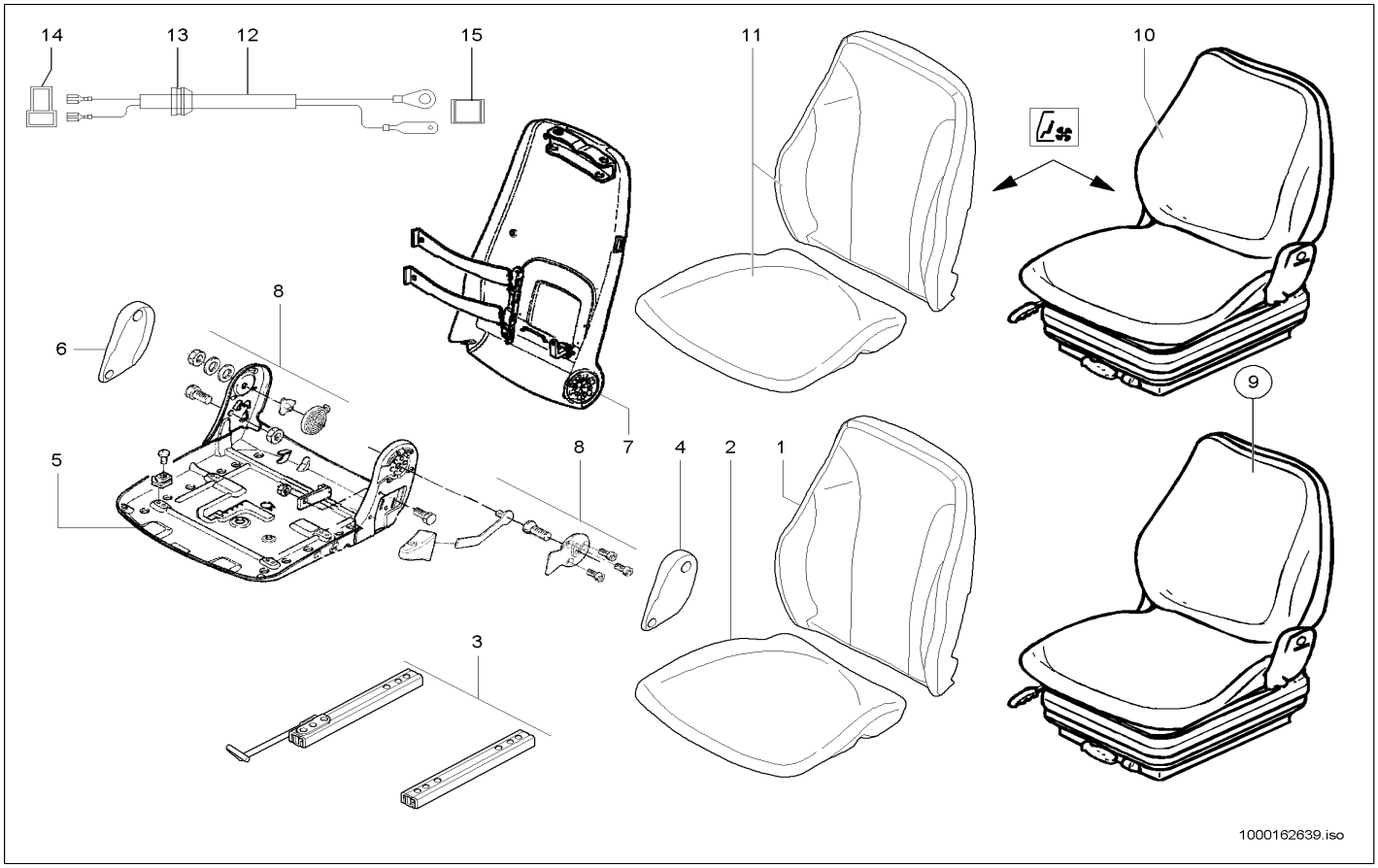


| Pos | Art.-Nr. | Anm. | Q'TY | BEZEICHNUNG | PART NAME | DESIGNATION |
|---|---|---|---|---|---|---|
| 1 | 1000089493 | mechanically, air | 1,00 ST | POLSTER | CUSHION | COUSSIN |
| 2 | 1000084945 | mechanically, air | 1,00 ST | SITZPOLSTER | SEAT UPHOLSTERY | BOURRELET |
| 3 | 1000022043 | | 1,00 ST | VERSTELLSCHIENE | DISPLACEMENT RAIL | RAIL À DÉPLACER |
| 4 | 1000108060 | | 1,00 ST | ABDECKUNG | COVER | COUVERCLE |
| 5 | 1000108061 | | 1,00 ST | SITZPLATTE | SEAT PLATE | PLAQUE DE SIÈGE |
| 6 | 1000084954 | | 1,00 ST | ABDECKUNG | COVER | COUVERCLE |
| 7 | 1000088505 | | 1,00 ST | RÜCKENTEIL | BACK PART | PART DORSALE |
| 8 | 1000088506 | | 1,00 ST | ANBAUTEIL | MOUNTING PIECE | PIÈCE DE CONSTRUCTION |
| 9 | 1000108299 | air | 1,00 ST | FAHRERSITZ | DRIVERS SEAT | SIÈGE DE CHAUFFEUR |
| 10 | 1000108279 | mechanically | 1,00 ST | FAHRERSITZ | DRIVERS SEAT | SIÈGE DE CHAUFFEUR |
| 11 | 1000142602 | kit heating | 1,00 ST | SITZHEIZUNG | SEAT HEATING | SIÉGE CHAUFLAGE |
| 12 | 1000146752 | | 1,00 ST | KABEL | CABLE | CÂBLE |
| 13 | 1000096025 | | 1,00 ST | DURCHFÜHRUNGSRING | JUNCTION | ANNEAU D'APPLICATION |
| 14 | 1000095323 | | 1,00 ST | STECKHÜLSENGEHÄUSE | PLUG SLEEVE HOUSING | BOÎTE À DOUILLES DE BOUCHON |
| 15 | 1000085008 | | 1,00 ST | FLACHSTECKERGEHÄUSE | PLUG HOUSING | BOÎTE DE BOUCHON |

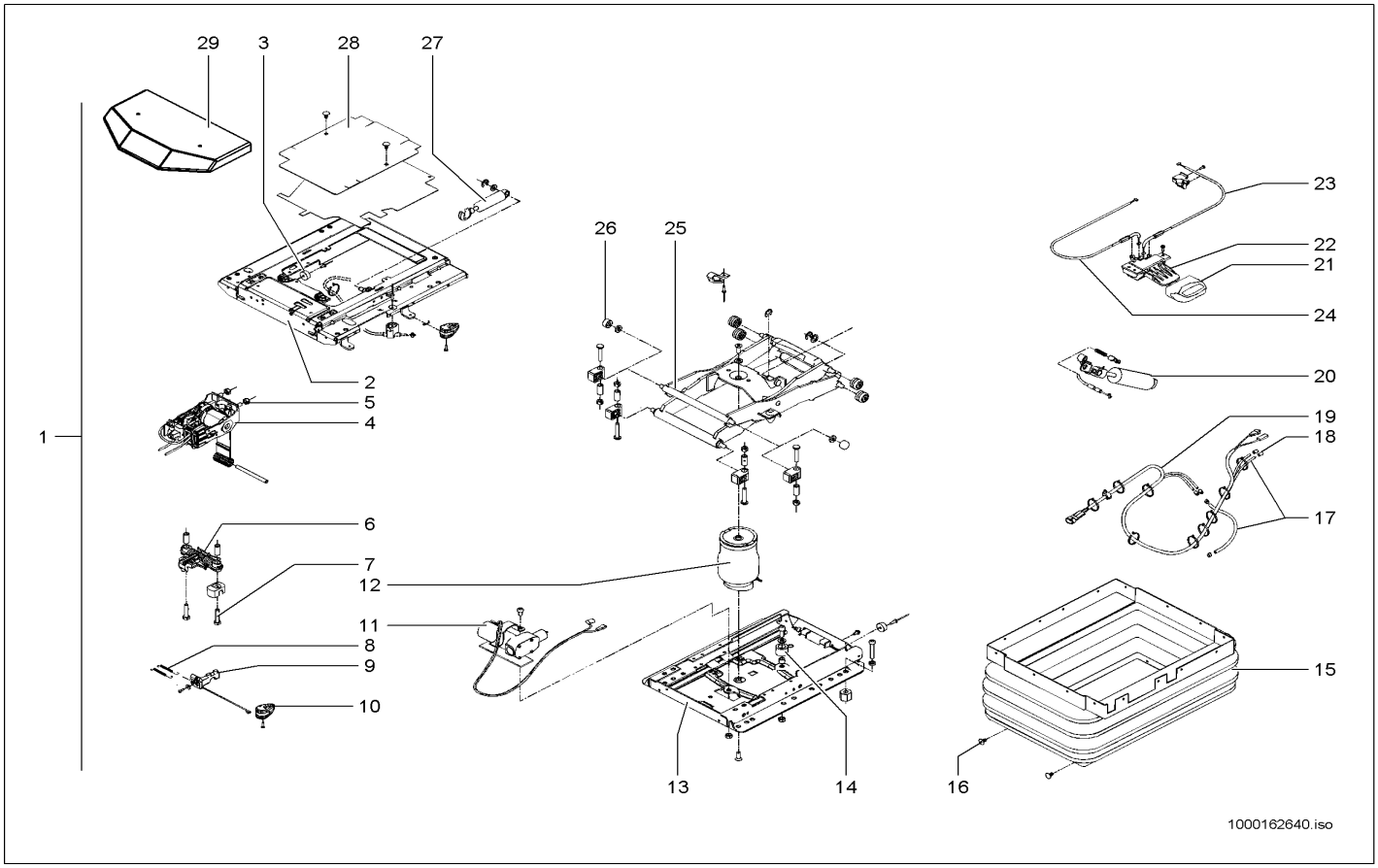


| Pos | Art.-Nr. | Anm. | Q'TY | BEZEICHNUNG | PART NAME | DESIGNATION |
|---|---|---|---|---|---|---|
| 1 | 1000150080 | | 1,00 ST | ELEMENT | ELEMENT | ÉLÉMENT |
| 2 | 1000150101 | | 1,00 ST | FEDERUNGSOBERTEIL | SPRING UPPER PART | PARTIE SUPÉRIEURE DE SUSPENSION |
| 3 | 1000141059 | | 1,00 ST | PUFFER | BUFFER | BUTOIR |
| 4 | 1000084996 | | 1,00 ST | NIVEAUSTEUERUNG | LEVEL CONTROL | CONTRÔLE DE NIVEAU |
| 5 | 1000088398 | | 6,00 ST | 6KT-MUTTER | HEXAGON NUT | ÉCROU HEXAGONAL |
| 6 | 1000101898 | | 1,00 ST | FEDER | SPRING | RESSORT |
| 7 | 1000139797 | | 2,00 ST | 6KT-SCHRAUBE | HEX SCREW | VIS À TÊTE HEXAGONALE |
| 8 | 1000141070 | | 2,00 ST | ZUGFEDER | TENSION SPRING | RESSORT DE TRACTION |
| 9 | 1000140463 | | 1,00 ST | HEBEL | LEVER | LEVIER |
| 10 | 1000140532 | | 1,00 ST | GRIFF | HANDLE | MANETTE |
| 11 | 1000150103 | | 1,00 ST | KOMPRESSOR | COMPRESSOR | COMPRESSEUR |
| 12 | 1000141058 | | 1,00 ST | LUFTFEDERUNG | PNEUMATIC CUSHIONING | SUSPENSION AÉRIENNE |
| 13 | 1000141044 | | 1,00 ST | FEDERUNGSUNTERTEIL | SPRING LOWER PART | PARTIE BAS DE SUSPENSION |
| 14 | 1000141060 | | 1,00 ST | PUFFER | BUFFER | BUTOIR |
| 15 | 1000066851 | | 1,00 ST | FALTENBALG | BELLOW | SOUFFLET |
| 16 | 1000030573 | | 24,00 ST | STOPFEN | PLUG | BOUCHON |
| 17 | 1000140271 | | 1,00 ST | SCHLAUCH | HOSE | TUYAU FLEXIBLE |
| 18 | 1000141342 | | 2,00 ST | TÜLLE | SLEEVE | BEC |
| 19 | 1000150108 | | 1,00 ST | KABEL | CABLE | CÂBLE |
| 20 | 1000149244 | | 1,00 ST | STOSSDÄMPFER | CHOCK ABSORBER | AMORTISSEUR |
| 21 | 1000140533 | | 1,00 ST | GRIFF | HANDLE | MANETTE |
| 22 | 1000140990 | | 1,00 ST | BETÄTIGUNG | CONTROL LEVER | COMMANDE |
| 23 | 1000149246 | | 1,00 ST | BOWDENZUG | BOWDEN CABLE | TACTION DE BOWDEN |
| 24 | 1000149245 | | 1,00 ST | BOWDENZUG | BOWDEN CABLE | TACTION DE BOWDEN |
| 25 | 1000141063 | | 1,00 ST | SCHWINGE | WING | BIELLE |
| 26 | 1000150109 | | 2,00 ST | NADELLAGER | NEEDLE BEARING | PALIER À AIGUILLES |
| 27 | 1000089352 | | 1,00 ST | STOSSDÄMPFER | CHOCK ABSORBER | AMORTISSEUR |
| 28 | 1000140129 | | 1,00 ST | ABDECKUNG | COVER | COUVERCLE |
| 29 | 1000150110 | | 1,00 ST | ABDECKUNG | COVER | COUVERCLE |

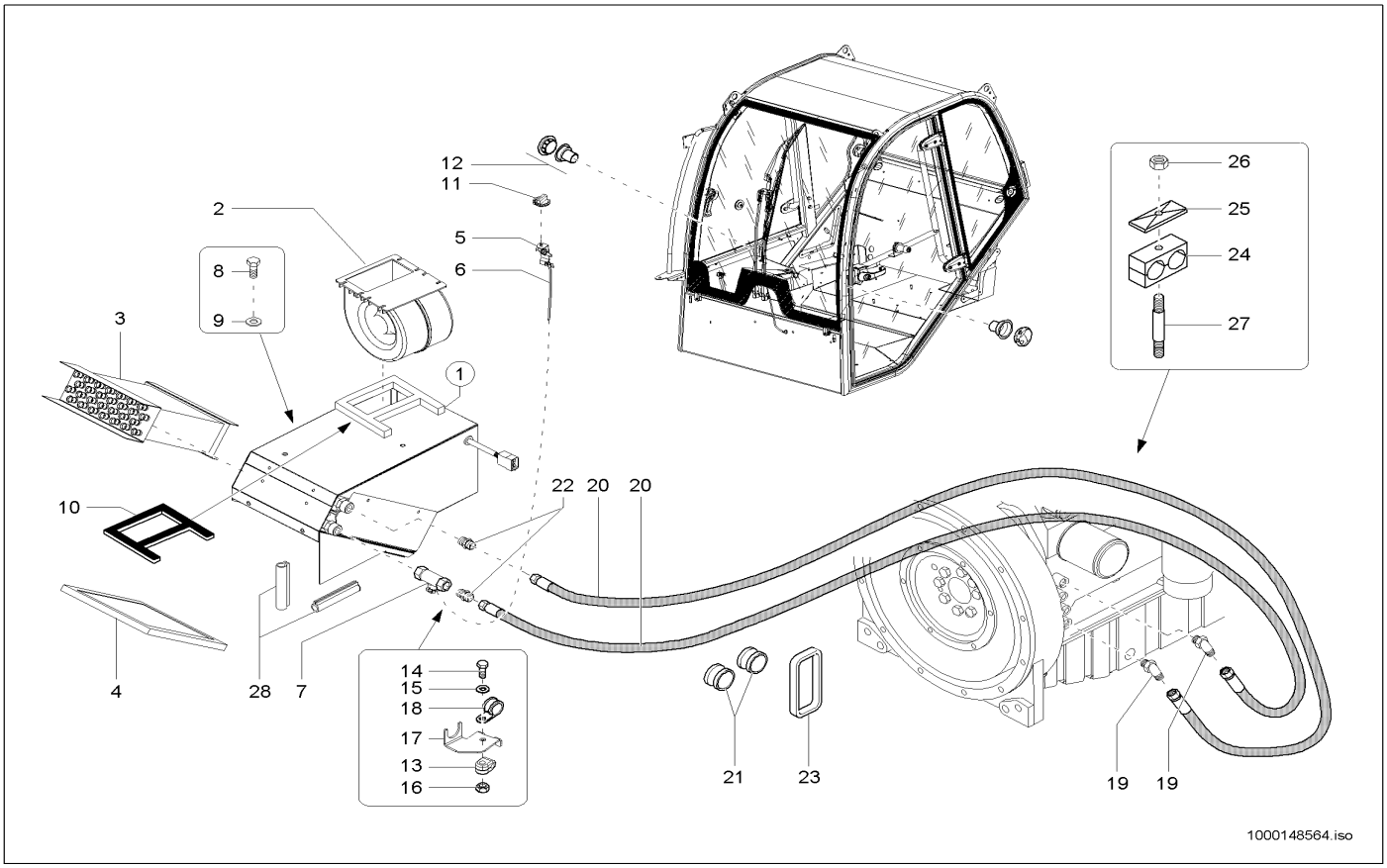


| Pos | Art.-Nr. | Anm. | Q'TY | BEZEICHNUNG | PART NAME | DESIGNATION |
|---|---|---|---|---|---|---|
| 1 | 1000137189 | | 1,00 ST | HEIZGERÄT | HEATER | APPAREIL DE CHAUFFAGE |
| 2 | 1000134532 | | 1,00 ST | GEBLÄSE | BLOWER | VENTILATEUR |
| 3 | 1000134533 | | 1,00 ST | WÄRMETAUSCHER | HEAT EXCHANGER | ÉCHANGEUR DE CHALEUR |
| 4 | 1000137208 | | 1,00 ST | FRISCHLUFTFILTER | FRESH FILTER A AIR | FILTRE A AIR FRAIS |
| 5 | 1000139236 | | 1,00 ST | DREHSCHALTER | ROTARY SWITCH | INTERRUPTEUR ROTATIF |
| 6 | 1000139237 | | 1,00 ST | BOWDENZUG | BOWDEN CABLE | TACTION DE BOWDEN |
| 7 | 1000021091 | | 1,00 ST | KUGELHAHN | BALL VALVE | ROBINET À BOULET |
| 8 | 1000085382 | | 3,00 ST | 6KT-SCHRAUBE | HEX SCREW | VIS À TÊTE HEXAGONALE |
| 9 | 1000049283 | | 3,00 ST | LAGERSCHEIBE | BEARINGDISC | DISQUE DE PALIER |
| 10 | 1000097141 | | 0,45 M | DICHTBAND | SEAL STRAP | RUBAN ISOLANT |
| 11 | 1000033887 | | 1,00 ST | DREHKNOPF | ROTARY KNOB | BOUTON DE ROTATION |
| 12 | 1000102342 | | 2,00 ST | HEIZDÜSE | HEATER NOZZLE | CLAPET DE CHAUFFAGE |
| 13 | 1000106160 | | 1,00 ST | HALTER BOWDENZUG | BRACKET BOWDENCABLE | SUPPORT DE TRACTION DE BOWDEN |
| 14 | 1000085380 | | 1,00 ST | 6KT-SCHRAUBE | HEX SCREW | VIS À TÊTE HEXAGONALE |
| 15 | 1000095342 | | 1,00 ST | SCHEIBE | WASHER | RONDELLE |
| 16 | 1000085587 | | 1,00 ST | 6KT-MUTTER | HEXAGON NUT | ÉCROU HEXAGONAL |
| 17 | 1000141418 | | 1,00 ST | VERDREHSICHERUNG | TWIST LOCK | SÛRETÉ DE TORSION |
| 18 | 1000100479 | | 1,00 ST | SCHELLE | CLAMP | BRIDE |
| 19 | 1000028701 | | 2,00 ST | VERSCHRAUBUNG | SCREW JOINT | RACCORD UNION |
| 20 | 1000144681 | | 2,00 ST | HYDRAULIKSCHLAUCH | HP HOSE | TUYAU FLEXIBLE HYDRAULIQUE |
| 21 | 1000033427 | | 2,00 ST | DURCHFÜHRUNGSRING | JUNCTION | ANNEAU D'APPLICATION |
| 22 | 1000136389 | | 1,00 ST | VERSCHRAUBUNG | SCREW JOINT | RACCORD UNION |
| 23 | 1000033872 | | 1,00 ST | DURCHFÜHRUNGSRING | JUNCTION | ANNEAU D'APPLICATION |
| 24 | 1000031638 | | 4,00 ST | SCHELLE | CLAMP | BRIDE |
| 25 | 1000031245 | | 4,00 ST | DECKPLATTE | COVER PLATE | PLAQUE DE RECOUVREMENT |
| 26 | 1000015408 | | 3,00 ST | 6KT-MUTTER | HEXAGON NUT | ÉCROU HEXAGONAL |
| 27 | 1000048894 | | 1,00 ST | STIFTSCHRAUBE | STUD | GOUJON |
| 28 | 1000097155 | | 1,00 M | PROFIL | PROFILE | PROFIL |

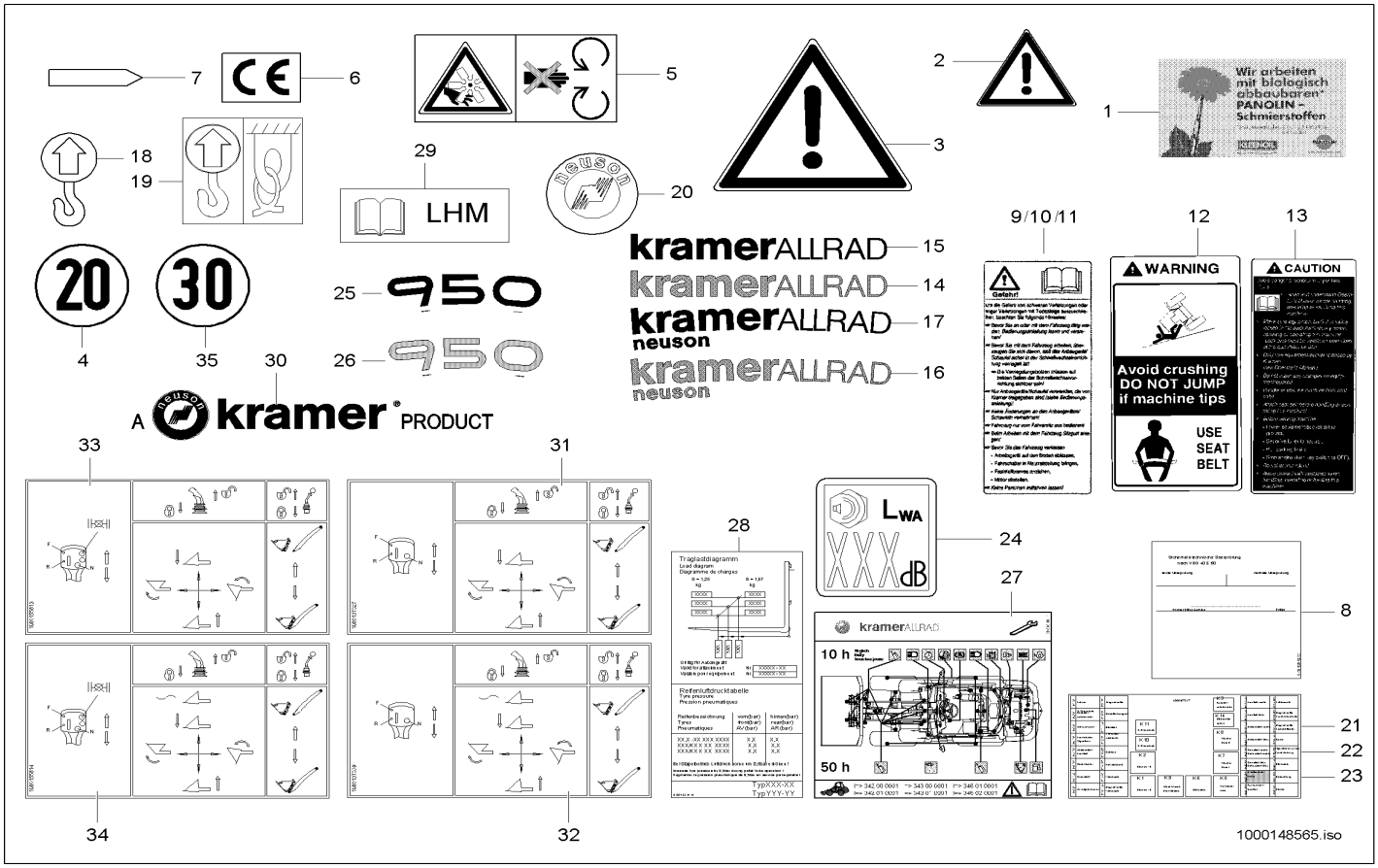


| Pos | Art.-Nr. | Anm. | Q'TY | BEZEICHNUNG | PART NAME | DESIGNATION |
|---|---|---|---|---|---|---|
| 1 | 1000029748 | | 1,00 ST | HINWEISSCHILD | INDICATION LABEL | PLAQUE INDICATRICE |
| 2 | 1000030024 | | 1,00 ST | WARNSCHILD | WARNING SIGN | BOUCLIER D'AVERTISSEMENT |
| 3 | 1000030041 | | 2,00 ST | WARNSCHILD | WARNING SIGN | BOUCLIER D'AVERTISSEMENT |
| 4 | 1000029786 | 20 km/h | 3,00 ST | HINWEISSCHILD | INDICATION LABEL | PLAQUE INDICATRICE |
| 5 | 1000052383 | | 1,00 ST | SCHILD | LABEL | PANNEAU |
| 6 | 1000050663 | | 1,00 ST | SCHILD CE | LABEL CE | LABEL CE |
| 7 | 1000029770 | | 2,00 ST | MARKIERUNG | MARKING | MARQUAGE |
| 8 | 1000052380 | | 1,00 ST | SICHERHEITSZEICHEN | SAFETY SIGN | SIGNE DE SÉCURITÉ |
| 9 | 1000030234 | DE | 1,00 ST | WARNSCHILD | WARNING SIGN | BOUCLIER D'AVERTISSEMENT |
| 10 | 1000030240 | EN | 1,00 ST | WARNSCHILD | WARNING SIGN | BOUCLIER D'AVERTISSEMENT |
| 11 | 1000052387 | FR | 1,00 ST | WARNSCHILD | WARNING SIGN | SIGNAL D'AVERTISSEMENT |
| 12 | 1000030254 | USA | 1,00 ST | WARNSCHILD | WARNING SIGN | BOUCLIER D'AVERTISSEMENT |
| 13 | 1000030260 | USA | 1,00 ST | WARNSCHILD | WARNING SIGN | BOUCLIER D'AVERTISSEMENT |
| 14 | 1000108067 | RAL 7045 | 1,00 ST | SCHILD | LABEL | PANNEAU |
| 15 | 1000108066 | RAL 7043 | 1,00 ST | SCHILD | LABEL | PANNEAU |
| 16 | 1000102918 | RAL 7045 | 2,00 ST | SCHILD | LABEL | PANNEAU |
| 17 | 1000102917 | RAL 7043 | 2,00 ST | SCHILD | LABEL | PANNEAU |
| 18 | 1000099079 | | 4,00 ST | HINWEISSCHILD | INDICATION LABEL | PLAQUE INDICATRICE |
| 19 | 1000099080 | | 4,00 ST | HINWEISSCHILD | INDICATION LABEL | PLAQUE INDICATRICE |
| 20 | 1000101091 | | 1,00 ST | PLAKETTE | BADGE | PLAQUE |
| 21 | 1000133977 | DE | 1,00 ST | SCHILD BELEGUNG SICHERUNGSKASTEN | LABEL CHARGE SAFETY BOX | PANNEAU DU CHARGEMENT BOÎTE À FUSIBLES |
| 22 | 1000133978 | EN | 1,00 ST | SCHILD BELEGUNG SICHERUNGSKASTEN | LABEL CHARGE SAFETY BOX | PANNEAU DU CHARGEMENT BOÎTE À FUSIBLES |
| 23 | 1000133979 | FR | 1,00 ST | SCHILD | LABEL | PANNEAU |
| 24 | 1000107241 | | 1,00 ST | HINWEISSCHILD | INDICATION LABEL | PLAQUE INDICATRICE |
| 25 | 1000142627 | RAL 7043 | 2,00 ST | TYPENSCHILD | TYPE PLATE | PANNEAU-TYPE |
| 26 | 1000142628 | RAL 7045 | 2,00 ST | TYPENSCHILD | TYPE PLATE | PANNEAU-TYPE |
| 27 | 1000104014 | | 1,00 ST | WARTUNGSPLAN | MAINTENANCE SCHEDULE | SCHÉMA DE MAINTENANCE |
| 28 | 1000145814 | | 1,00 ST | TRAGLASTDIAGRAMM | CARRY LOAD DIAGRAM | DIAGRAMME DE CHARGEMENT |
| 29 | 1000128944 | | 1,00 ST | HINWEISSCHILD | INDICATION LABEL | PLAQUE INDICATRICE |
| 30 | 1000144761 | | 2,00 ST | SCHILD | LABEL | PANNEAU |
| 31 | 1000137327 | | 1,00 ST | HINWEISSCHILD | INDICATION LABEL | PLAQUE INDICATRICE |
| 32 | 1000137339 | | 1,00 ST | HINWEISSCHILD | INDICATION LABEL | PLAQUE INDICATRICE |
| 33 | 1000155813 | | 1,00 ST | HINWEISSCHILD | INDICATION LABEL | PLAQUE INDICATRICE |
| 34 | 1000155814 | | 1,00 ST | HINWEISSCHILD | INDICATION LABEL | PLAQUE INDICATRICE |
| 35 | 1000030005 | 30 km/h | 1,00 ST | HINWEISSCHILD | INDICATION LABEL | PLAQUE INDICATRICE |

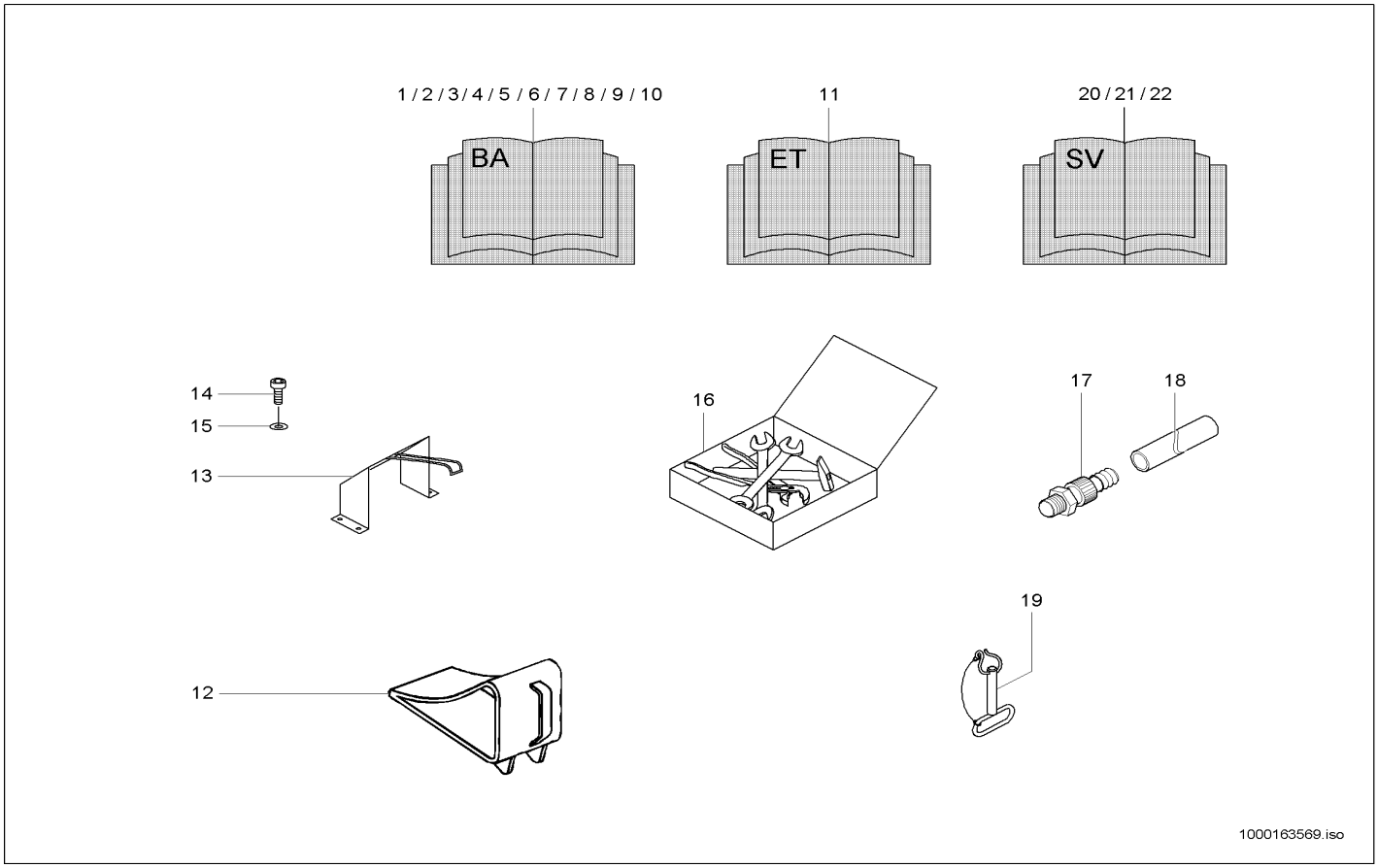


| Pos | Art.-Nr. | Anm. | Q'TY | BEZEICHNUNG | PART NAME | DESIGNATION |
|---|---|---|---|---|---|---|
| 1 | 1000135440 | DE | 1,00 ST | BEDIENUNGSANLEITUNG | INSTRUCTION MANUAL | MODE D'EMPLOI |
| 2 | 1000135443 | EN | 1,00 ST | BEDIENUNGSANLEITUNG | INSTRUCTION MANUAL | MODE D'EMPLOI |
| 3 | 1000135444 | FR | 1,00 ST | BEDIENUNGSANLEITUNG | INSTRUCTION MANUAL | MODE D'EMPLOI |
| 4 | 1000135446 | IT | 1,00 ST | BEDIENUNGSANLEITUNG | INSTRUCTION MANUAL | MODE D'EMPLOI |
| 5 | 1000135447 | DA | 1,00 ST | BEDIENUNGSANLEITUNG | INSTRUCTION MANUAL | MODE D'EMPLOI |
| 6 | 1000135448 | NO | 1,00 ST | BEDIENUNGSANLEITUNG | INSTRUCTION MANUAL | MODE D'EMPLOI |
| 7 | 1000135449 | FI | 1,00 ST | BEDIENUNGSANLEITUNG | INSTRUCTION MANUAL | MODE D'EMPLOI |
| 8 | 1000135451 | SV | 1,00 ST | BEDIENUNGSANLEITUNG | INSTRUCTION MANUAL | MODE D'EMPLOI |
| 9 | 1000135458 | NL | 1,00 ST | BEDIENUNGSANLEITUNG | INSTRUCTION MANUAL | MODE D'EMPLOI |
| 10 | 1000135459 | ES | 1,00 ST | BEDIENUNGSANLEITUNG | INSTRUCTION MANUAL | MODE D'EMPLOI |
| 11 | 1000142523 | | 1,00 ST | ERSATZTEILLISTE | SPARE PARTS LIST | LISTE DE PIÈCE DE RECHANGE |
| 12 | 1000050427 | | 1,00 ST | UNTERLEGEKEIL | WHEEL CHOCK | CLAVETTE DE METTRE DESSOUS |
| 13 | 1000029676 | | 1,00 ST | HALTER | BRACKET CLUTCH | SUPPORT |
| 14 | 1000048186 | | 2,00 ST | ZYLINDERSCHRAUBE | CHEESE HEAD SCREW | VIS A TETE CYLINDRIQUE |
| 15 | 1000015431 | | 4,00 ST | SCHEIBE | WASHER | RONDELLE |
| 16 | 1000029573 | | 1,00 ST | WERKZEUGSATZ | TOOL KIT | JEU D'OUTILS |
| 17 | 1000098599 | | 1,00 ST | ABLAßKUPPLUNG | DRAIN COUPLING | COUPLEUR DE PURGE |
| 18 | 1000098872 | | 1,00 ST | SCHLAUCH | HOSE | TUYAU FLEXIBLE |
| 19 | 1000036697 | | 1,00 ST | ANHÄNGEZAPFEN | TOWING PIN | TOURILLON TRACTÉ |
| 20 | 1000157344 | DE | 1,00 ST | HANDBUCH | HAND BOOK | MANUEL |
| 21 | 1000157345 | EN | 1,00 ST | HANDBUCH | HAND BOOK | MANUEL |
| 22 | 1000157346 | FR | 1,00 ST | HANDBUCH | HAND BOOK | MANUEL |

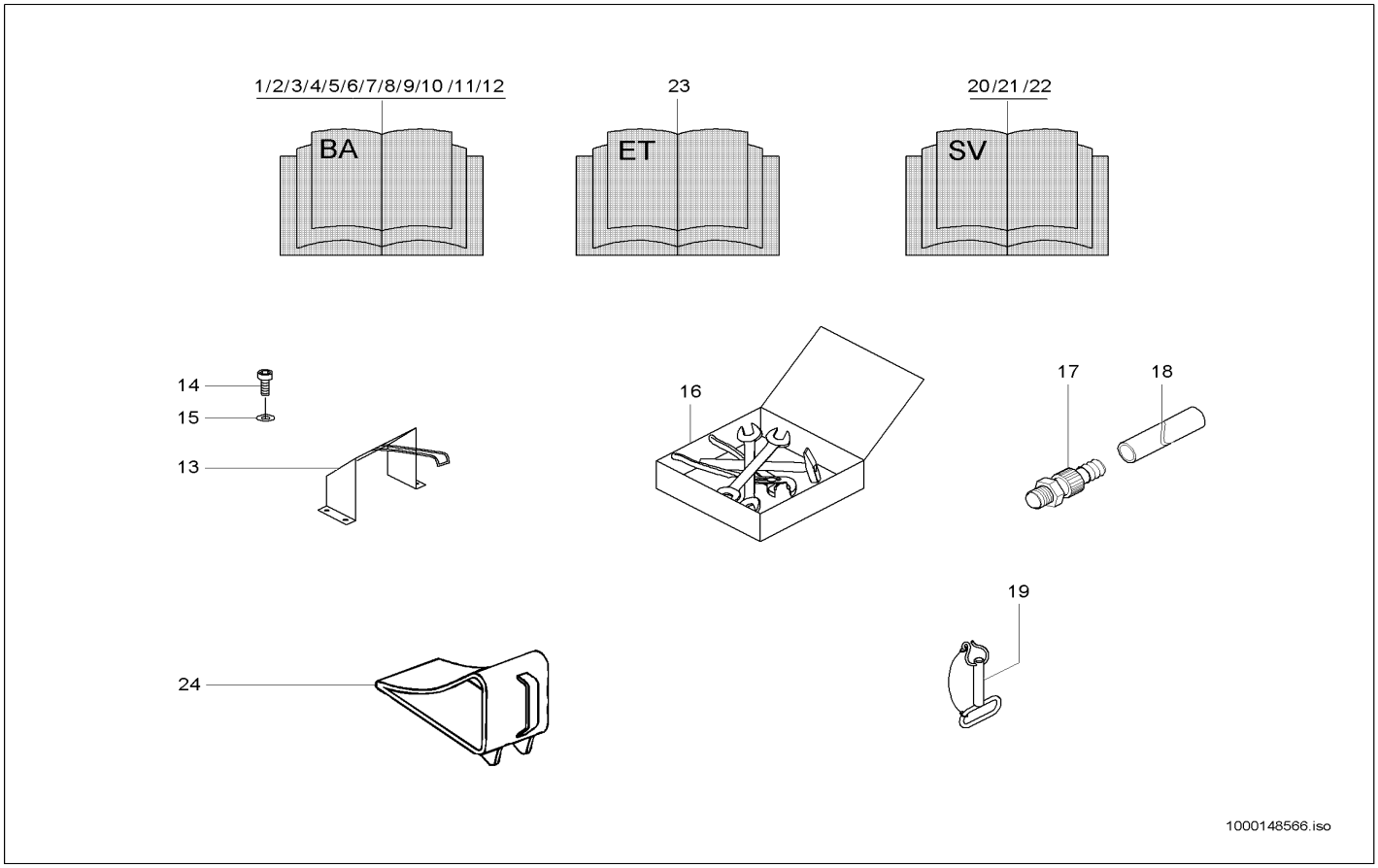


| Pos | Art.-Nr. | Anm. | Q'TY | BEZEICHNUNG | PART NAME | DESIGNATION |
|---|---|---|---|---|---|---|
| 1 | 1000155963 | DE | 1,00 ST | BEDIENUNGSANLEITUNG | INSTRUCTION MANUAL | MODE D'EMPLOI |
| 2 | 1000155964 | EN | 1,00 ST | BEDIENUNGSANLEITUNG | INSTRUCTION MANUAL | MODE D'EMPLOI |
| 3 | 1000155965 | FR | 1,00 ST | BEDIENUNGSANLEITUNG | INSTRUCTION MANUAL | MODE D'EMPLOI |
| 4 | 1000155966 | IT | 1,00 ST | BEDIENUNGSANLEITUNG | INSTRUCTION MANUAL | MODE D'EMPLOI |
| 5 | 1000155967 | DA | 1,00 ST | BEDIENUNGSANLEITUNG | INSTRUCTION MANUAL | MODE D'EMPLOI |
| 6 | 1000155968 | NO | 1,00 ST | BEDIENUNGSANLEITUNG | INSTRUCTION MANUAL | MODE D'EMPLOI |
| 7 | 1000155969 | FI | 1,00 ST | BEDIENUNGSANLEITUNG | INSTRUCTION MANUAL | MODE D'EMPLOI |
| 8 | 1000155970 | SV | 1,00 ST | BEDIENUNGSANLEITUNG | INSTRUCTION MANUAL | MODE D'EMPLOI |
| 9 | 1000155971 | NL | 1,00 ST | BEDIENUNGSANLEITUNG | INSTRUCTION MANUAL | MODE D'EMPLOI |
| 10 | 1000155972 | ES | 1,00 ST | BEDIENUNGSANLEITUNG | INSTRUCTION MANUAL | MODE D'EMPLOI |
| 11 | 1000169481 | CS | 1,00 ST | BEDIENUNGSANLEITUNG | INSTRUCTION MANUAL | MODE D'EMPLOI |
| 12 | 1000164334 | PL | 1,00 ST | BEDIENUNGSANLEITUNG | INSTRUCTION MANUAL | MODE D'EMPLOI |
| 13 | 1000029676 | | 1,00 ST | HALTER | BRACKET CLUTCH | SUPPORT |
| 14 | 1000048186 | | 2,00 ST | ZYLINDERSCHRAUBE | CHEESE HEAD SCREW | VIS A TETE CYLINDRIQUE |
| 15 | 1000015431 | | 4,00 ST | SCHEIBE | WASHER | RONDELLE |
| 16 | 1000029573 | | 1,00 ST | WERKZEUGSATZ | TOOL KIT | JEU D'OUTILS |
| 17 | 1000098599 | | 1,00 ST | ABLAßKUPPLUNG | DRAIN COUPLING | COUPLEUR DE PURGE |
| 18 | 1000098872 | | 1,00 ST | SCHLAUCH | HOSE | TUYAU FLEXIBLE |
| 19 | 1000036697 | | 1,00 ST | ANHÄNGEZAPFEN | TOWING PIN | TOURILLON TRACTÉ |
| 20 | 1000157344 | DE | 1,00 ST | HANDBUCH | HAND BOOK | MANUEL |
| 21 | 1000157345 | EN | 1,00 ST | HANDBUCH | HAND BOOK | MANUEL |
| 22 | 1000157346 | FR | 1,00 ST | HANDBUCH | HAND BOOK | MANUEL |
| 23 | 1000142523 | | 1,00 ST | ERSATZTEILLISTE | SPARE PARTS LIST | LISTE DE PIÈCE DE RECHANGE |
| 24 | 1000050427 | | 1,00 ST | UNTERLEGEKEIL | WHEEL CHOCK | CLAVETTE DE METTRE DESSOUS |

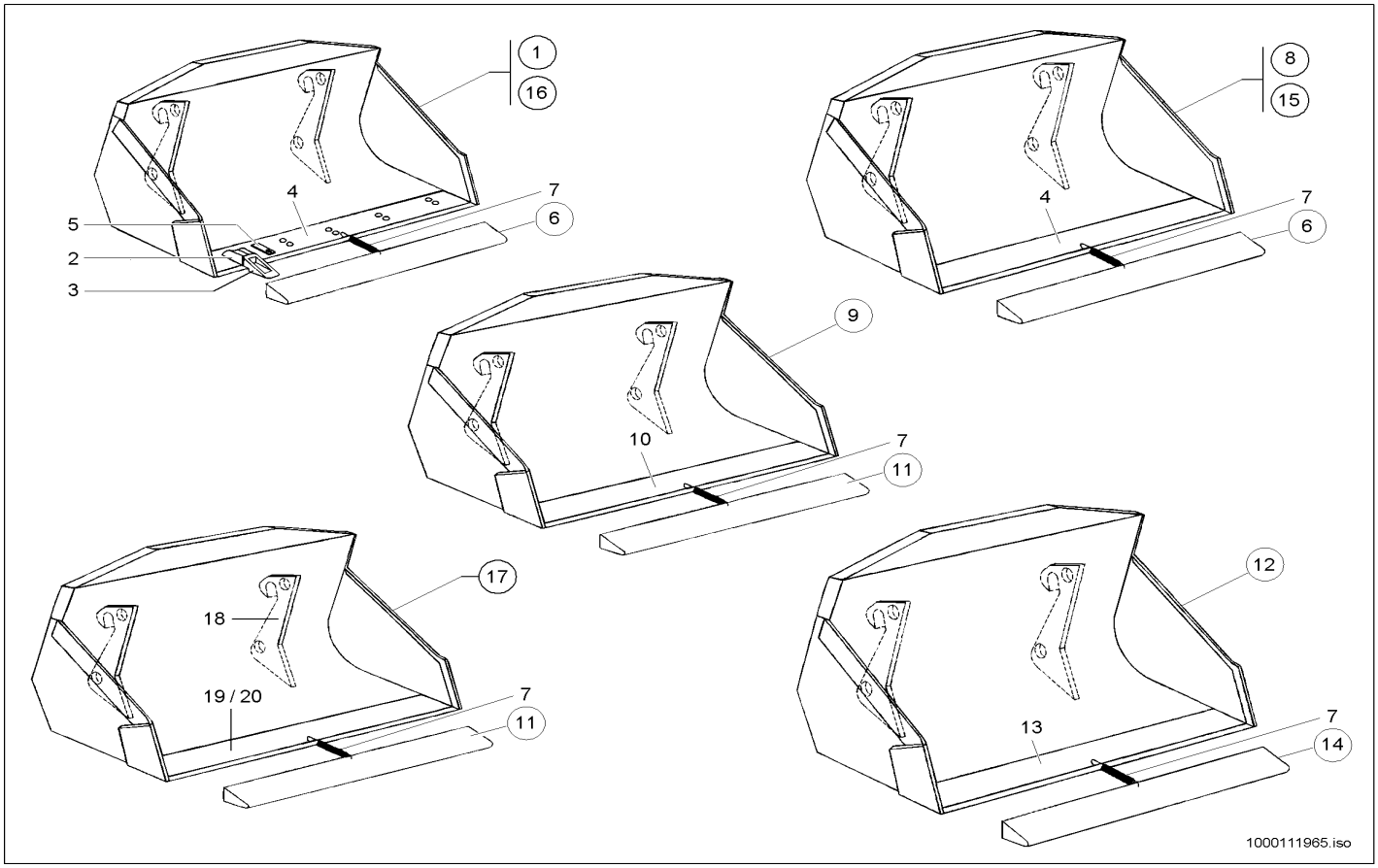


| Pos | Art.-Nr. | Anm. | Q'TY | BEZEICHNUNG | PART NAME | DESIGNATION |
|---|---|---|---|---|---|---|
| 1 | 1000096385 | 1950 m.Rz | 1,00 ST | STANDARDSCHAUFEL SWP 1950 M.RZ. RAL 7043 | STANDARD BUCKET SWP 1950 M.RZ. RAL 7043 | GODET STANDARD SWP 1950 M.RZ. RAL 7043 |
| 2 | 1000017065 | | 6,00 ST | HÜLSE | SLEEVE | DOUILLE |
| 3 | 1000017066 | | 6,00 ST | REISSZAHN | RIPPER TOOTH | DENT DE RUPTURE |
| 4 | 1000054448 | | 1,00 ST | SCHAR | BLADE | FAISCEAU |
| 5 | 1000003990 | | 6,00 ST | SICHERUNG | LOCKING | SÛRETÉ |
| 6 | 1000036989 | | 1,00 ST | ZAHNSCHUTZ | TOOTH PROTECTION | PROTECTION DE DENT |
| 7 | 1000031051 | < | 1,00 ST | ZUGFEDER | TENSION SPRING | RESSORT DE TRACTION |
| 8 | 1000100599 | 1950 o.Rz | 1,00 ST | STANDARDSCHAUFEL SWP O.RZ. 1950 RAL7043 | STANDARD BUCKET O.RZ. 1950MM RAL7043 | GODET STANDARD O.RZ. 1950MM RAL70 |
| 9 | 1000096394 | 2150 o.Rz. | 1,00 ST | LADESCHAUFEL SWP 2150 O.RZ. | BUCKET SWP 2150 O.RZ. | GODET SWP 2150 O.RZ. |
| 10 | 1000054450 | | 1,00 ST | SCHAR | BLADE | FAISCEAU |
| 11 | 1000037104 | | 1,00 ST | ZAHNSCHUTZ | TOOTH PROTECTION | PROTECTION DE DENT |
| 12 | 1000096398 | 2300 | 1,00 ST | SUPERLEICHTGUTSCHAUFEL 2300MM RAL7043 | SUPERLIGHTW.MAT.BUCKET 2300MM RAL7043 | GODET MAT. SUPERLÉG. 2300MM RAL70 |
| 13 | 1000053723 | | 1,00 ST | SCHAR | BLADE | FAISCEAU |
| 14 | 1000037105 | | 1,00 ST | ZAHNSCHUTZ | TOOTH PROTECTION | PROTECTION DE DENT |
| 15 | 1000154581 | 1950 o.Rz. | 1,00 ST | STANDARDSCHAUFEL SWP 1950 O.RZ. | STANDARD BUCKET SWP 1950 O.RZ. | GODET STANDARD SWP 1950 O.RZ. |
| 16 | 1000154547 | 1950 m.Rz. | 1,00 ST | STANDARDSCHAUFEL SWP 1950 M.RZ. | STANDARD BUCKET SWP 1950 W.RZ. | GODET STANDARD SWP 1950 W.RZ. |
| 17 | 1000113366 | o.RZ. 1950 | 1,00 ST | STANDARDSCHAUFEL SWP O.RZ. 1950 SSCH | STANDARD BUCKET O.RZ. 1950MM RAL7043 | GODET STANDARD O.RZ. 1950MM RAL70 |
| 18 | 1000052718 | | 2,00 ST | AUFHÄNGUNG | JOINT | SUSPENSION |
| 19 | 1000113369 | Lg 1950 | 1,00 ST | SCHAR | BLADE | FAISCEAU |
| 20 | 1000113368 | Lg 1950 | 1,00 ST | SCHAR | BLADE | FAISCEAU |

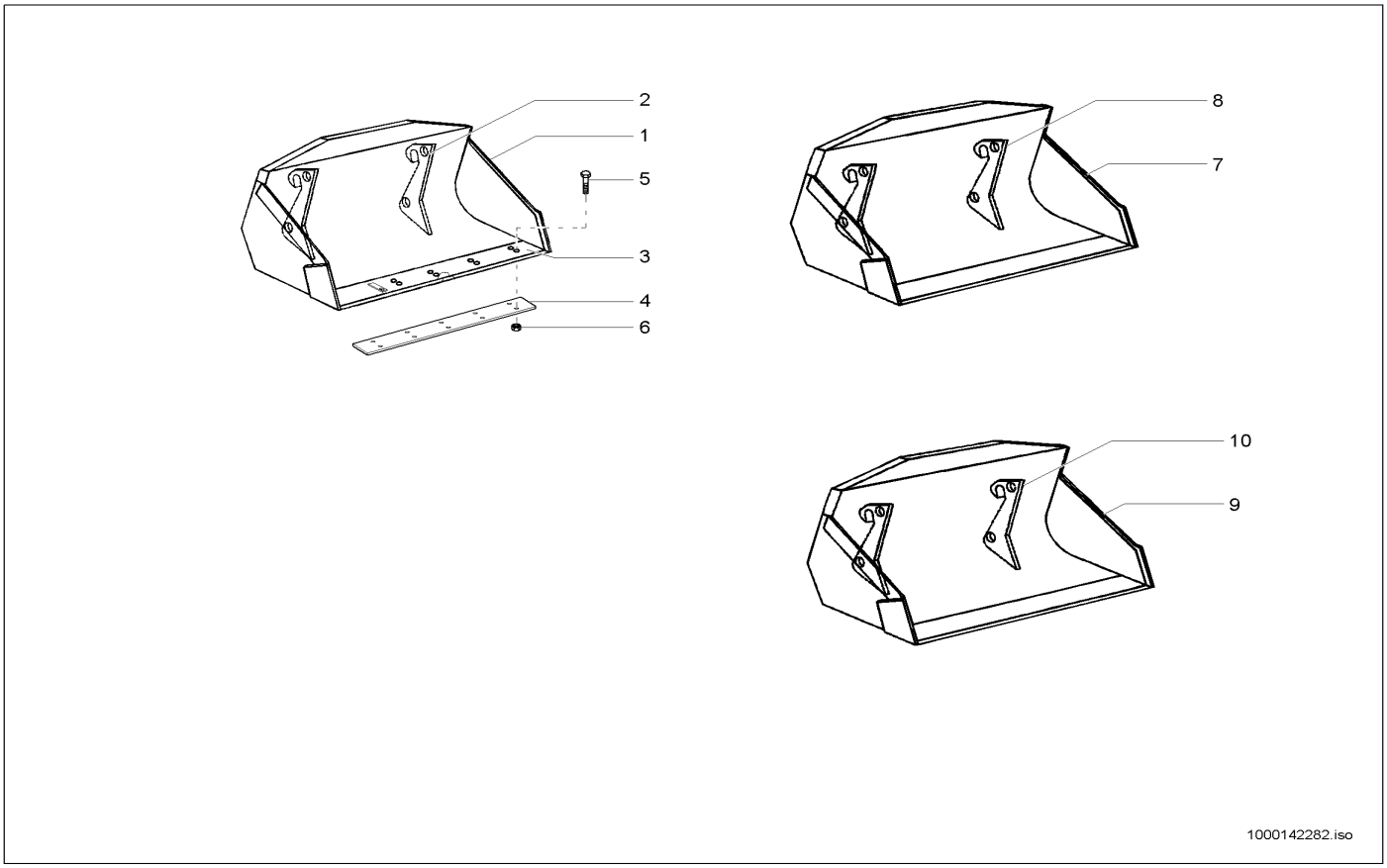


| Pos | Art.-Nr. | Anm. | Q'TY | BEZEICHNUNG | PART NAME | DESIGNATION |
|---|---|---|---|---|---|---|
| 1 | 1000112105 | | 1,00 ST | LADESCHAUFEL SWP 1600 O.RZ. RAL7043 | BUCKET SWP 1600 O.RZ. RAL7043 | GODET SWP 1600 O.RZ. RAL7043 |
| 2 | 1000052741 | | 2,00 ST | AUFHÄNGUNG | JOINT | SUSPENSION |
| 3 | 1000112190 | | 1,00 ST | SCHAR | BLADE | FAISCEAU |
| 4 | 1000112107 | Schraubschar | 1,00 ST | SCHAR | BLADE | FAISCEAU |
| 5 | 1000085539 | | 11,00 ST | SENKSCHRAUBE | SINKSCREW | VIS À TÊTE NOYÉE |
| 6 | 1000049096 | | 11,00 ST | 6KT-MUTTER | HEXAGON NUT | ÉCROU HEXAGONAL |
| 7 | 1000110166 | 1700mm | 1,00 ST | LADESCHAUFEL SWP 1700 O.RZ. RAL7043 | BUCKET SWP 1700 O.RZ. RAL7043 | GODET SWP 1700 O.RZ. RAL7043 |
| 8 | 1000052741 | | 2,00 ST | AUFHÄNGUNG | JOINT | SUSPENSION |
| 9 | 1000110167 | 1700mm | 1,00 ST | LADESCHAUFEL SWP 1700 O.RZ. RAL7043 | BUCKET SWP 1700 O.RZ. RAL7043 | GODET SWP 1700 O.RZ. RAL7043 |
| 10 | 1000052741 | | 2,00 ST | AUFHÄNGUNG | JOINT | SUSPENSION |

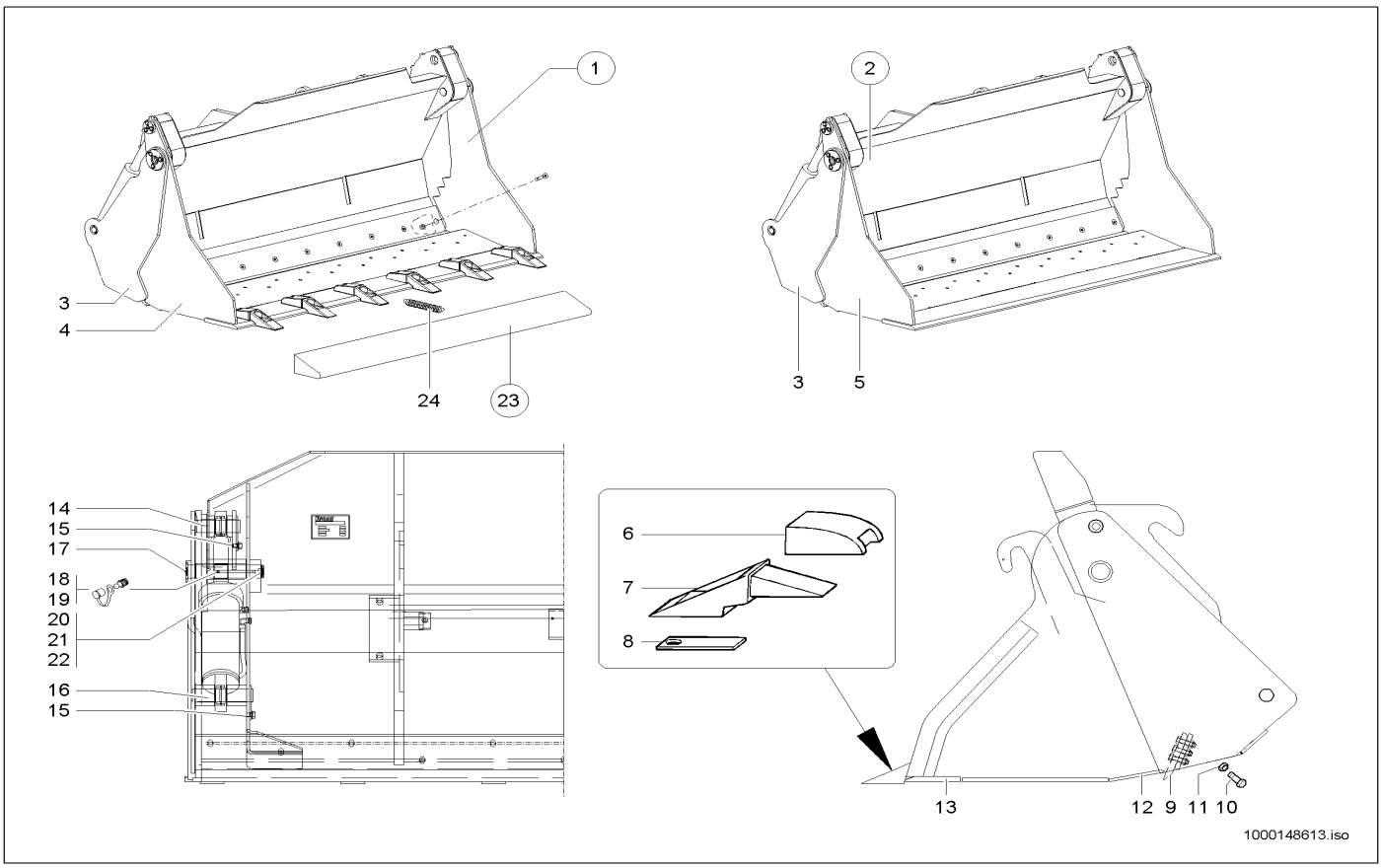


| Pos | Art.-Nr. | Anm. | Q'TY | BEZEICHNUNG | PART NAME | DESIGNATION |
|---|---|---|---|---|---|---|
| 1 | 1000114038 | 1950 m. Rz. | 1,00 ST | GREIFERSCHAUFEL 1950 M. RZ. | MULTIPURPOSE BUCKET 1950 M. RZ. | POLY-GODET 1950 M. RZ. |
| 2 | 1000114716 | 1950 o. Rz. | 1,00 ST | GREIFERSCHAUFEL 1950 O. RZ. | MULTIPURPOSE BUCKET 1950 O. RZ. | POLY-GODET 1950 O. RZ. |
| 3 | 1000114588 | | 1,00 ST | SCHAUFELTEIL | BUCKET PART | PART DE PELLE |
| 4 | 1000114690 | m. Rz. | 1,00 ST | VORDERTEIL | FRONT PART | PARTIE FRONTALE |
| 5 | 1000114717 | o. Rz. | 1,00 ST | VORDERTEIL | FRONT PART | PARTIE FRONTALE |
| 6 | 1000017065 | | 6,00 ST | HÜLSE | SLEEVE | DOUILLE |
| 7 | 1000017066 | | 6,00 ST | REISSZAHN | RIPPER TOOTH | DENT DE RUPTURE |
| 8 | 1000003990 | | 6,00 ST | SICHERUNG | LOCKING | SÛRETÉ |
| 9 | 1000114710 | | 1,00 ST | SCHAR | BLADE | FAISCEAU |
| 10 | 1000047390 | | 11,00 ST | 6KT-SCHRAUBE | HEX SCREW | VIS À TÊTE HEXAGONALE |
| 11 | 1000019657 | | 11,00 ST | 6KT-MUTTER | HEXAGON NUT | ÉCROU HEXAGONAL |
| 12 | 1000114613 | Lg 1860 | 1,00 ST | SCHAR | BLADE | FAISCEAU |
| 13 | 1000114614 | Lg 1950 | 1,00 ST | SCHAR | BLADE | FAISCEAU |
| 14 | 1000054459 | | 2,00 ST | BOLZEN | PIN | AXE |
| 15 | 1000013009 | | 4,00 ST | 6KT-SCHRAUBE | HEX SCREW | VIS À TÊTE HEXAGONALE |
| 16 | 1000054458 | | 2,00 ST | BOLZEN | PIN | AXE |
| 17 | 1000054461 | | 2,00 ST | BOLZEN | PIN | AXE |
| 18 | 1000050469 | | 2,00 ST | SCHMIERNIPPEL | GREASE NIPPLE | GRAISSEUR À BILLE |
| 19 | 1000033442 | | 2,00 ST | KAPPE | CAP | BOUCHON |
| 20 | 1000092318 | 40x50x1,0 | 4,00 ST | PASSSCHEIBE | FITTING DISC | DISQUE D'AJUSTAGE |
| 21 | 1000092317 | 40x50x0,5 | 4,00 ST | PASSSCHEIBE | FITTING DISC | DISQUE D'AJUSTAGE |
| 22 | 1000095360 | | 2,00 ST | SICHERUNGSRING | LOCK RING | BAGUE DE SÛRETÉ |

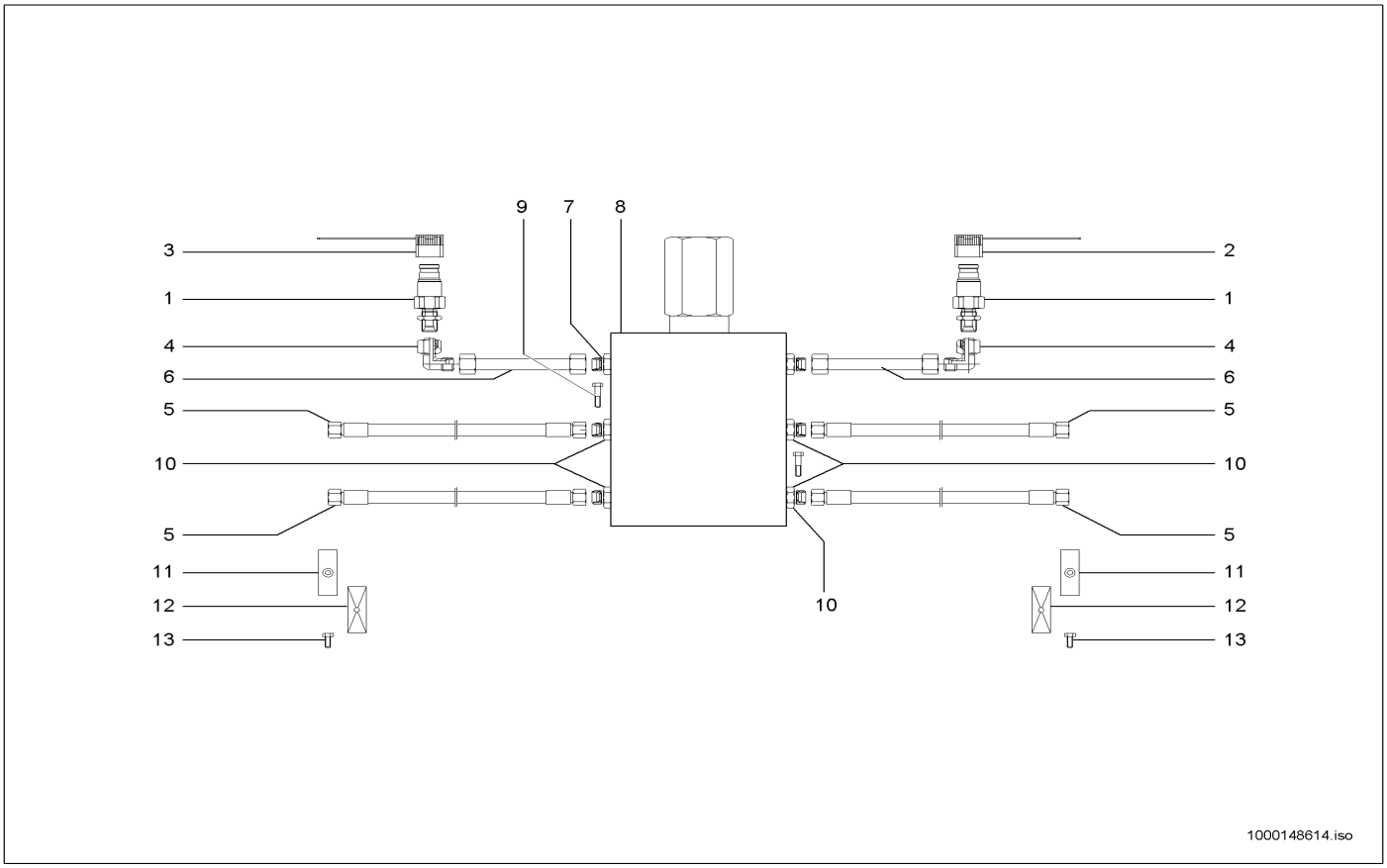


| Pos | Art.-Nr. | Anm. | Q'TY | BEZEICHNUNG | PART NAME | DESIGNATION |
|---|---|---|---|---|---|---|
| 1 | 1000000541 | | 2,00 ST | SCHNELLVERSCHLUßKUPPLUNG | QUICK LOCK COUPLING | COUPLEUR À FERMETURE RAPIDE |
| 2 | 1000020861 | blau | 1,00 ST | STAUBKAPPE | DUST CAP | BONNET À POUSSIÈRE |
| 3 | 1000020860 | rot | 1,00 ST | STAUBKAPPE | DUST CAP | BONNET À POUSSIÈRE |
| 4 | 1000000573 | | 2,00 ST | VERSCHRAUBUNG | SCREW JOINT | RACCORD UNION |
| 5 | 1000029067 | | 4,00 ST | HYDRAULIKSCHLAUCH | HP HOSE | TUYAU FLEXIBLE HYDRAULIQUE |
| 6 | 1000113246 | | 2,00 ST | HYDRAULIKROHR | HYDRAULIC PIPE | TUBE HYDRAULIQUE |
| 7 | 1000113265 | | 2,00 ST | BLENDE | PROTECTION | BANDEAU |
| 8 | 1000054452 | | 1,00 ST | DRUCKBEGRENZUNGSVENTIL | PRESSURE LIMIT RELIEFVALVE | SOUPAPE LIMITRICE DE PRESSION |
| 9 | 1000085317 | | 2,00 ST | 6KT-SCHRAUBE | HEX SCREW | VIS À TÊTE HEXAGONALE |
| 10 | 1000085053 | | 4,00 ST | VERSCHRAUBUNG | SCREW JOINT | RACCORD UNION |
| 11 | 1000031626 | | 2,00 ST | SCHELLE | CLAMP | BRIDE |
| 12 | 1000031230 | | 2,00 ST | DECKPLATTE | COVER PLATE | PLAQUE DE RECOUVREMENT |
| 13 | 1000085391 | | 2,00 ST | 6KT-SCHRAUBE | HEX SCREW | VIS À TÊTE HEXAGONALE |

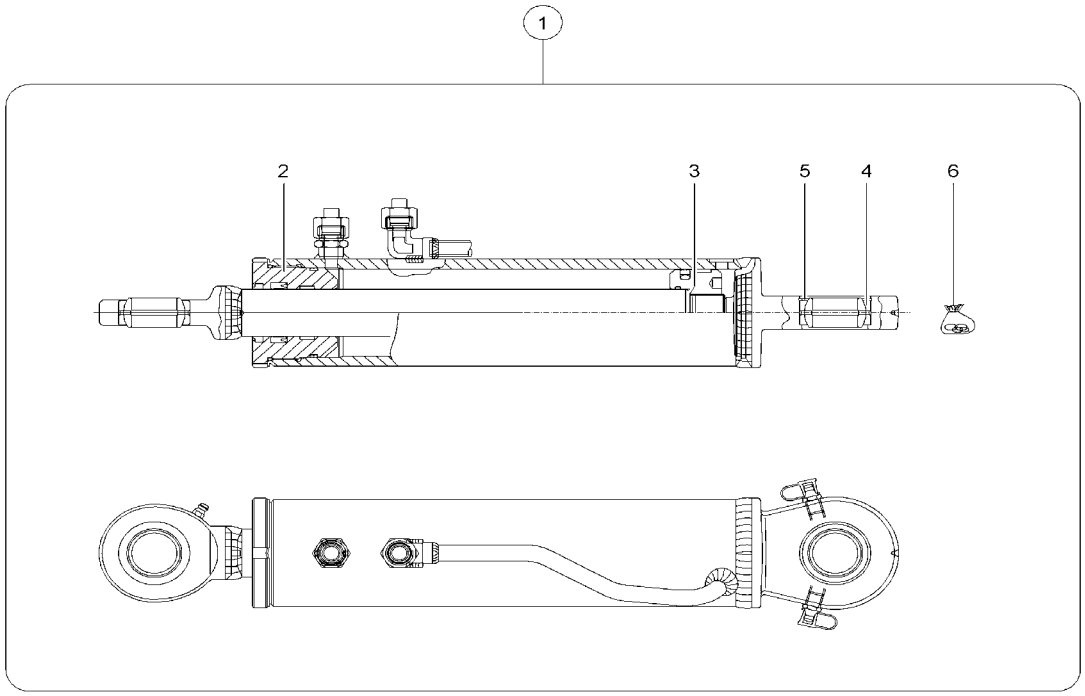


1000142979.iso

| Pos | Art.-Nr. | Anm. | Q'TY | BEZEICHNUNG | PART NAME | DESIGNATION |
|---|---|---|---|---|---|---|
| 1 | 1000054460 | | 2,00 ST | HUBZYLINDER | LIFT CYLINDER | CYLINDRE DE LEVAGE |
| 2 | 1000130397 | | 1,00 ST | FÜHRUNGSBUCHSE | GUIDE BUSHING | DOUILLE DE GUIDAGE |
| 3 | 1000130398 | | 1,00 ST | KOLBEN | PISTON | PISTON |
| 4 | 1000032422 | | 1,00 ST | GELENKLAGER | PIVOTING BEARING | PALIER ARTICULÉ |
| 5 | 1000020784 | | 1,00 ST | SICHERUNGSRING | LOCK RING | BAGUE DE SÛRETÉ |
| 6 | 1000142980 | | 1,00 ST | DICHTSATZ | SEAL KIT | POCHETTE DE JOINTS |

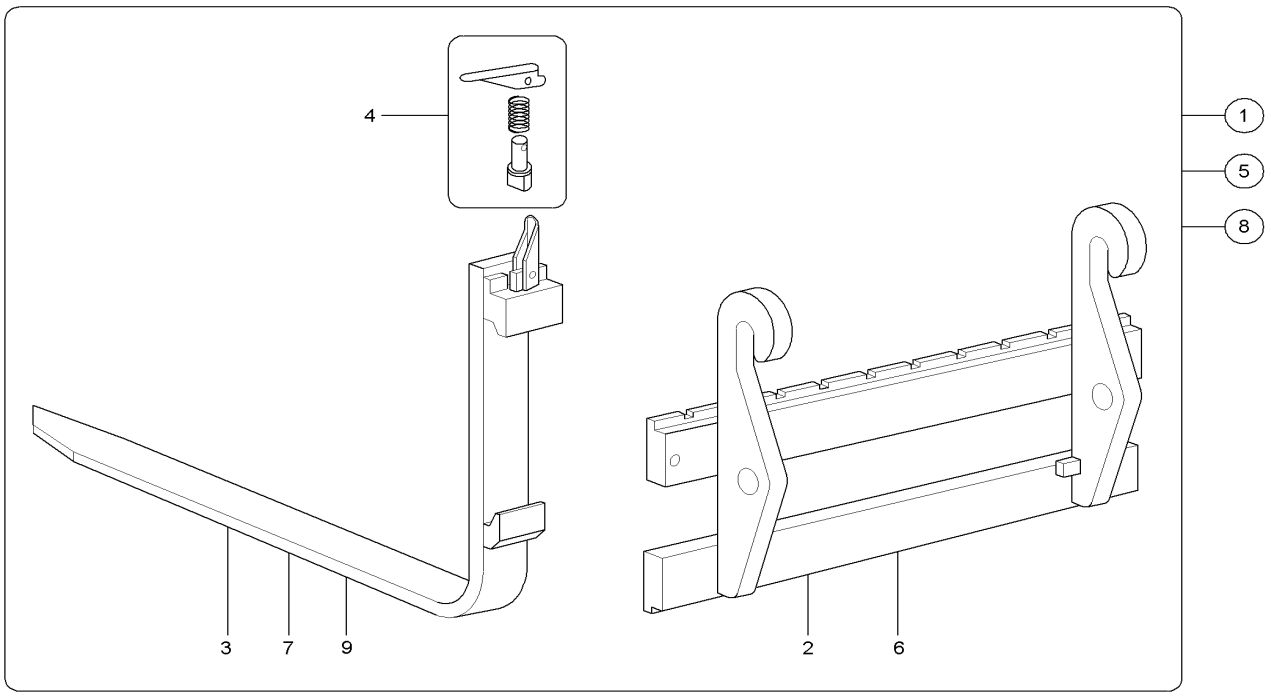


1000111967.iso

| Pos | Art.-Nr. | Anm. | Q'TY | BEZEICHNUNG | PART NAME | DESIGNATION |
|---|---|---|---|---|---|---|
| 1 | 1000101820 | MA 10280-00 / 1000 mm | 1,00 ST | STAPELEINRICHTUNG 1000 | PALLET FORKS 1000 | PORTE-PALETTE 1000 |
| 2 | 1000101824 | | 1,00 ST | GABELTRÄGER | FORK MOUNTING | SUPPORT DE ATTACHE RAPIDE |
| 3 | 1000104016 | 1000 mm | 2,00 ST | GABELZINKEN | FORK ARMS | FOURCHON |
| 4 | 1000101850 | | 2,00 ST | HEBEL | LEVER | LEVIER |
| 5 | 1000101822 | MA 10281-00 / 1200 mm | 1,00 ST | STAPELEINRICHTUNG SWP 1200 | PALLET FORKS SWP 1200 | PORTE-PALETTE SWP 1200 |
| 6 | 1000101824 | | 1,00 ST | GABELTRÄGER | FORK MOUNTING | SUPPORT DE ATTACHE RAPIDE |
| 7 | 1000104017 | 1200 mm | 2,00 ST | GABELZINKEN | FORK ARMS | FOURCHON |
| 8 | 1000160621 | Opt:1500 Lg. | 1,00 ST | STAPELEINRICHTUNG SWP 1500 | PALLET FORKS SWP 1500 | PORTE-PALETTE SWP 1500 |
| 9 | 1000163184 | Opt:1500 Lg. | 2,00 ST | GABELZINKEN | FORK ARMS | FOURCHON |

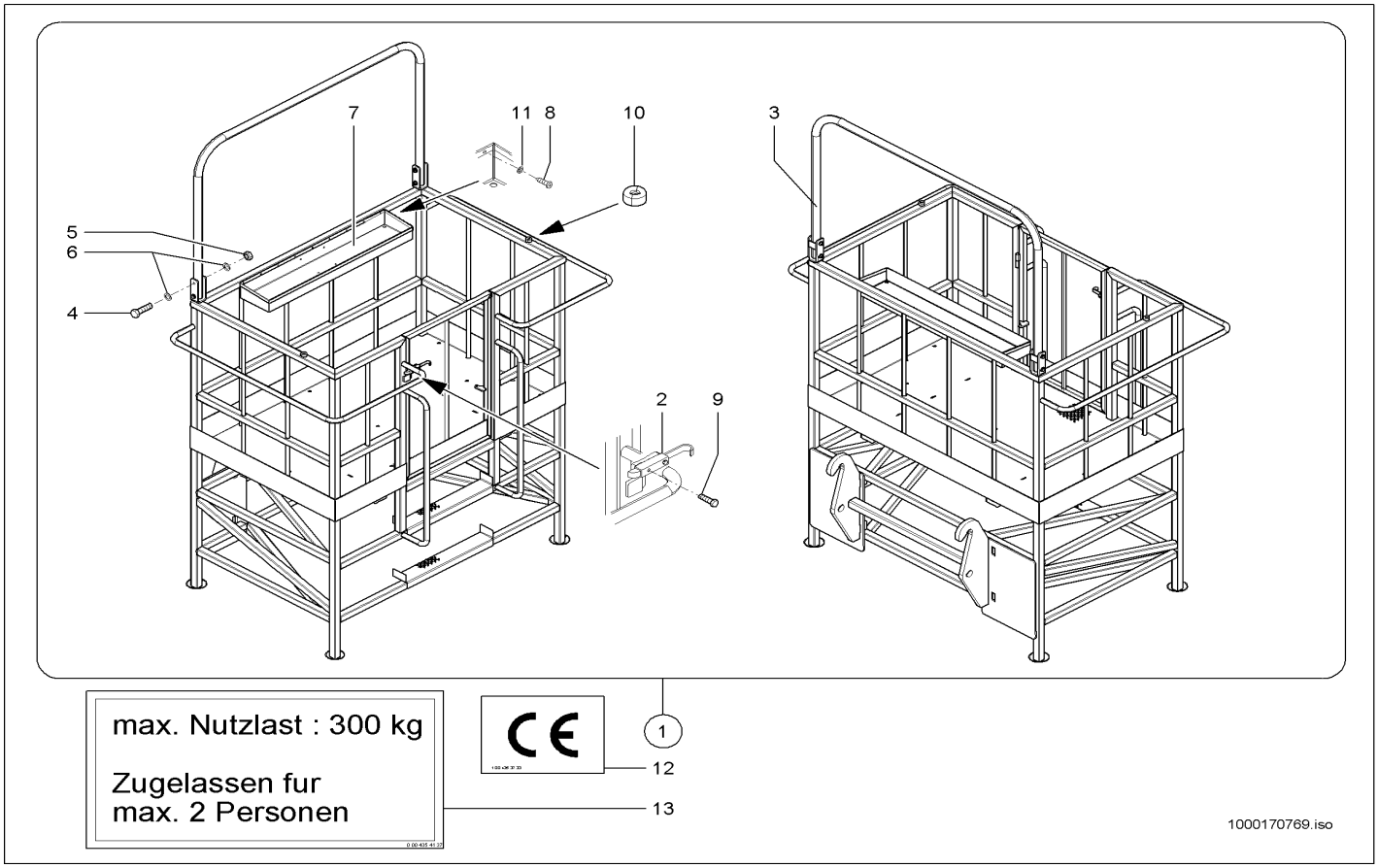


| Pos | Art.-Nr. | Anm. | Q'TY | BEZEICHNUNG | PART NAME | DESIGNATION |
|---|---|---|---|---|---|---|
| 1 | 1000109953 | | 1,00 ST | ARBEITSPLATTFORM | ? | ? |
| 2 | 1000055356 | | 1,00 ST | RIEGEL | LOCK | VERROU |
| 3 | 1000053925 | | 1,00 ST | SCHUTZBÜGEL | PROTECTING BAR | ARCHET DE PROTECTION |
| 4 | 1000047395 | | 4,00 ST | 6KT-SCHRAUBE | HEX SCREW | VIS À TÊTE HEXAGONALE |
| 5 | 1000019657 | | 4,00 ST | 6KT-MUTTER | HEXAGON NUT | ÉCROU HEXAGONAL |
| 6 | 1000049219 | | 8,00 ST | SCHEIBE | WASHER | RONDELLE |
| 7 | 1000053592 | | 1,00 ST | WERKZEUGKASTEN | TOOL BOX | BOÎTE À OUTILS |
| 8 | 1000082511 | | 9,00 ST | 6KT-SCHRAUBE | HEX SCREW | VIS À TÊTE HEXAGONALE |
| 9 | 1000015339 | | 2,00 ST | 6KT-SCHRAUBE | HEX SCREW | VIS À TÊTE HEXAGONALE |
| 10 | 1000033180 | | 2,00 ST | GUMMI | RUBBER | CAOUTCHOUC |
| 11 | 1000092290 | | 9,00 ST | SCHEIBE | WASHER | RONDELLE |
| 12 | 1000050663 | | 1,00 ST | SCHILD CE | LABEL CE | LABEL CE |
| 13 | 1000029955 | | 2,00 ST | HINWEISSCHILD | INDICATION LABEL | PLAQUE INDICATRICE |

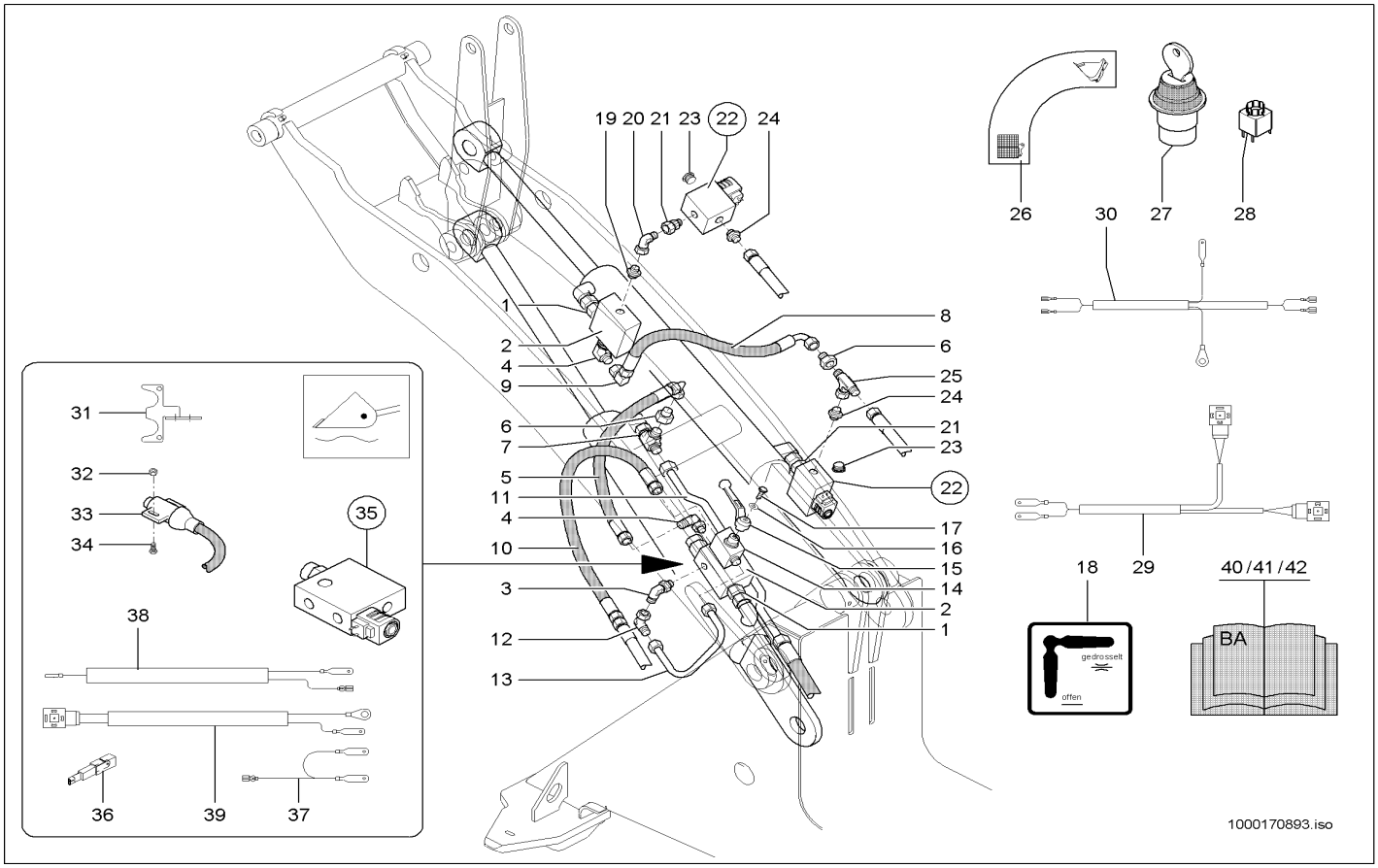


| Pos | Art.-Nr. | Anm. | Q'TY | BEZEICHNUNG | PART NAME | DESIGNATION |
|---|---|---|---|---|---|---|
| 1 | 1000015521 | | 2,00 ST | VERSCHRAUBUNG | SCREW JOINT | RACCORD UNION |
| 2 | 1000139769 | | 2,00 ST | VENTIL | VALVE | CLAPET |
| 3 | 1000028448 | | 1,00 ST | VERSCHRAUBUNG | SCREW JOINT | RACCORD UNION |
| 4 | 1000028677 | | 2,00 ST | VERSCHRAUBUNG | SCREW JOINT | RACCORD UNION |
| 5 | 1000145573 | | 1,00 ST | HYDRAULIKSCHLAUCH | HP HOSE | TUYAU FLEXIBLE HYDRAULIQUE |
| 6 | 1000085049 | | 2,00 ST | VERSCHRAUBUNG | SCREW JOINT | RACCORD UNION |
| 7 | 1000015539 | | 1,00 ST | VERSCHRAUBUNG | SCREW JOINT | RACCORD UNION |
| 8 | 1000029127 | | 1,00 ST | HYDRAULIKSCHLAUCH | HP HOSE | TUYAU FLEXIBLE HYDRAULIQUE |
| 9 | 1000000542 | | 1,00 ST | VERSCHRAUBUNG | SCREW JOINT | RACCORD UNION |
| 10 | 1000145578 | | 1,00 ST | HYDRAULIKSCHLAUCH | HP HOSE | TUYAU FLEXIBLE HYDRAULIQUE |
| 11 | 1000145498 | | 1,00 ST | HYDRAULIKROHR | HYDRAULIC PIPE | TUBE HYDRAULIQUE |
| 12 | 1000015512 | | 1,00 ST | VERSCHRAUBUNG | SCREW JOINT | RACCORD UNION |
| 13 | 1000105380 | | 1,00 ST | HYDRAULIKROHR | HYDRAULIC PIPE | TUBE HYDRAULIQUE |
| 14 | 1000027769 | | 1,00 ST | KUGELHAHN | BALL VALVE | ROBINET À BOULET |
| 15 | 1000027755 | | 1,00 ST | SCHALTHEBEL | SHIFT LEVER | LEVIER DE CHANGEMENT DE VITESSES |
| 16 | 1000095342 | | 1,00 ST | SCHEIBE | WASHER | RONDELLE |
| 17 | 1000048526 | | 1,00 ST | FLACHKOPFSCHRAUBE | FLAT HEAD SCREW | VIS DE TÊTE PLATE |
| 18 | 1000039493 | | 1,00 ST | HINWEISSCHILD | INDICATION LABEL | PLAQUE INDICATRICE |
| 19 | 1000015494 | | 1,00 ST | VERSCHRAUBUNG | SCREW JOINT | RACCORD UNION |
| 20 | 1000015512 | | 1,00 ST | VERSCHRAUBUNG | SCREW JOINT | RACCORD UNION |
| 21 | 1000028200 | | 2,00 ST | VERSCHRAUBUNG | SCREW JOINT | RACCORD UNION |
| 22 | 1000138358 | | 2,00 ST | MAGNETVENTIL | SOLENOID VALVE | ÉLECTROVALVE |
| 23 | 1000116080 | | 2,00 ST | VERSCHLUSSSCHRAUBE | LOCK SCREW | VIS DE FERMETURE |
| 24 | 1000085074 | | 2,00 ST | VERSCHRAUBUNG | SCREW JOINT | RACCORD UNION |
| 25 | 1000085108 | | 1,00 ST | VERSCHRAUBUNG | SCREW JOINT | RACCORD UNION |
| 26 | 1000052378 | | 1,00 ST | HINWEISSCHILD | INDICATION LABEL | PLAQUE INDICATRICE |
| 27 | 1000027253 | | 1,00 ST | SCHALTEREINHEIT | SWITCH UNIT | UNITÉ DE INTERRUPTEUR |
| 28 | 1000051960 | | 1,00 ST | SCHALTER | SWITCH | INTERRUPTEUR |
| 29 | 1000141239 | | 1,00 ST | KABELBAUM | WIRING HARNESS | ARBRE DE CÂBLE |
| 30 | 1000141238 | | 1,00 ST | KABELBAUM | WIRING HARNESS | ARBRE DE CÂBLE |
| 31 | 1000141236 | | 1,00 ST | HALTER | BRACKET CLUTCH | SUPPORT |
| 32 | 1000049057 | | 2,00 ST | 6KT-MUTTER | HEXAGON NUT | ÉCROU HEXAGONAL |
| 33 | 1000051973 | | 1,00 ST | HANDBREMSSCHALTER | SWITCH | INTERRUPTEUR |
| 34 | 1000048111 | | 2,00 ST | ZYLINDERSCHRAUBE | CHEESE HEAD SCREW | VIS A TETE CYLINDRIQUE |
| 35 | 1000139770 | | 1,00 ST | VENTIL | VALVE | CLAPET |
| 36 | 1000100594 | 3A | 2,00 ST | SPERRDIODE | BLOCK DIODE | DIODE SUPPRESSEUSE |
| 37 | 1000141383 | | 1,00 ST | KABEL | CABLE | CÂBLE |
| 38 | 1000141382 | | 1,00 ST | KABEL | CABLE | CÂBLE |
| 39 | 1000139716 | | 1,00 ST | KABEL | CABLE | CÂBLE |
| 40 | 1000170800 | DE | 1,00 ST | BEDIENUNGSANLEITUNG | INSTRUCTION MANUAL | MODE D'EMPLOI |
| 41 | 1000170801 | EN | 1,00 ST | BEDIENUNGSANLEITUNG | INSTRUCTION MANUAL | MODE D'EMPLOI |
| 42 | 1000170802 | FR | 1,00 ST | BEDIENUNGSANLEITUNG | INSTRUCTION MANUAL | MODE D'EMPLOI |

Die KRAMER-WERKE GmbH arbeitet ständig an der Verbesserung ihrer Produkte im Zuge der technischen Weiterentwicklung. Darum müssen wir uns Änderungen gegenüber den Abbildungen und Beschreibungen dieser Dokumentation vorbehalten, ohne dass daraus ein Anspruch auf Änderungen an bereits ausgelieferten Maschinen abgeleitet werden kann.

Technische Angaben, Maße und Gewichte sind unverbindlich. Irrtümer vorbehalten.

Nachdruck oder Übersetzung, auch auszugsweise, nur mit schriftlicher Genehmigung der KRAMER-WERKE GmbH.

Alle Rechte nach dem Gesetz des Urheberrechts vorbehalten.
KRAMER-WERKE GmbH
Nussdorferstr. 50
D-88662 Überlingen
Germany

**Kramer Werke GmbH**
Nußdorfer Straße 50
D-88662Überlingen
Tel. +49 (0) 7551 802-0
Fax +49 (0) 7551 802-260
e-Mail info@kramer.de
www.neusonkramer.com

Neuson Baumaschinen GmbH
Haidfeldstraße 37
A-4060 Linz-Leonding
Tel. +43 (0) 732 90590-0
Fax +43 (0) 732 90590-200
e-Mail office@neuson.com
www.neusonkramer.com

Neuson Ltd.
Crown Business Park
Dukestown, Tredegar
Gwent. NP22 4EF
United Kingdom
Tel. +44 (0) 1495 723083
Fax +44 (0) 1495 713941
e-Mail ukoffice@neuson.com
www.neusonkramer.com