COMPANY	REF.	DESIGNATION
		A-3 A
	DATE	CODE
	07-06-2000	602.013.01

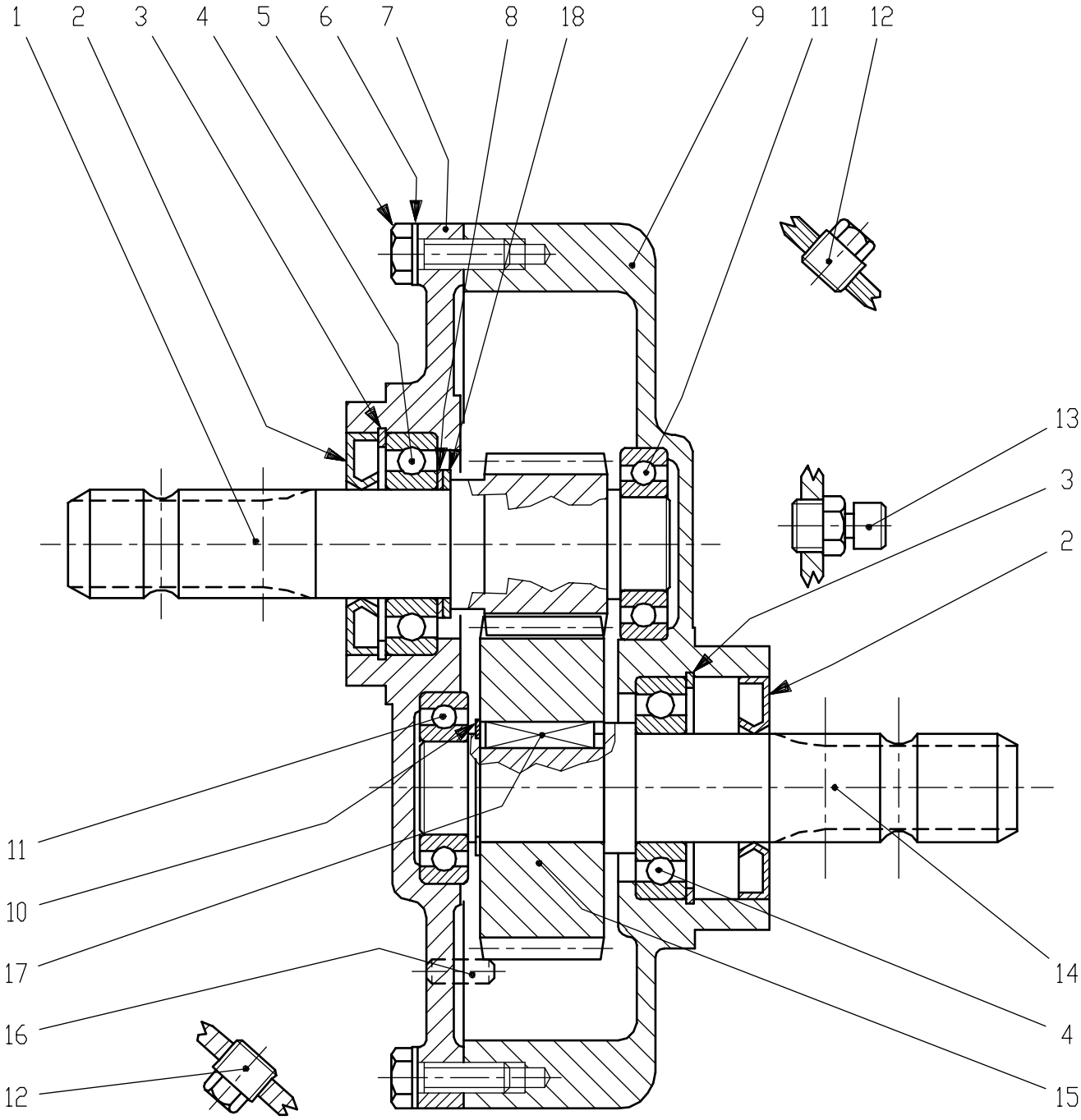

COMER S.p.A. 42046 Villanova di Reggiolo (R.E.) Italia Tel. 0522\974111 (9 Linee) Telefax 0522\973249 Telex 530252 COMEX I

DESIGNATION GEAR BOX A-3A	CODE N° 9.602.013.01

POS.	DRG. N.	PIEC	DESCRIPTION	
1	0.602.6102.01	1	PINION SHAFT	Z17
2	8.7.3.00055	2	OIL SEAL	35X72X10
3	8.5.2.00131	2	SNAP RING	72 UNI7437
4	8.0.1.00025	2	BEARING	6207
5	8.1.1.00073	6	BOLT	M10X30 8,8
6	8.3.6.00020	6	SINGLE COIL WASHER	10,2DIN7980
7	0.602.1300.01	1	COVER	
8	0.259.7500.00	1	SHIM	48.0
9	0.602.0300.03	1	CASING	
10	8.5.1.00005	1	SNAP RING	35 UNI7435
11	8.0.1.00010	2	BEARING	6206
12	8.6.5.00006	2	PLUG	3/8"GAS
13	8.6.7.00161	1	OIL FILLER PLUG	3/8”GAS
14	0.602.2000.04	1	SHAFT	
15	0.602.5101.02	1	CROWN WHEEL	Z34 M3
16	8.4.4.00450	2	SPRING PIN	8X22UNI1707
17	8.4.1.00021	2	PARALLEL KEY	A 10X8X35
18	0.259.7525.00	1	SHIM	35.3x2.5