comer industries
gearboxes

COMPANY	REF.	DESIGNATION
		D-732A
	DATE	CODE
	28-04-2006	9.732.375.00

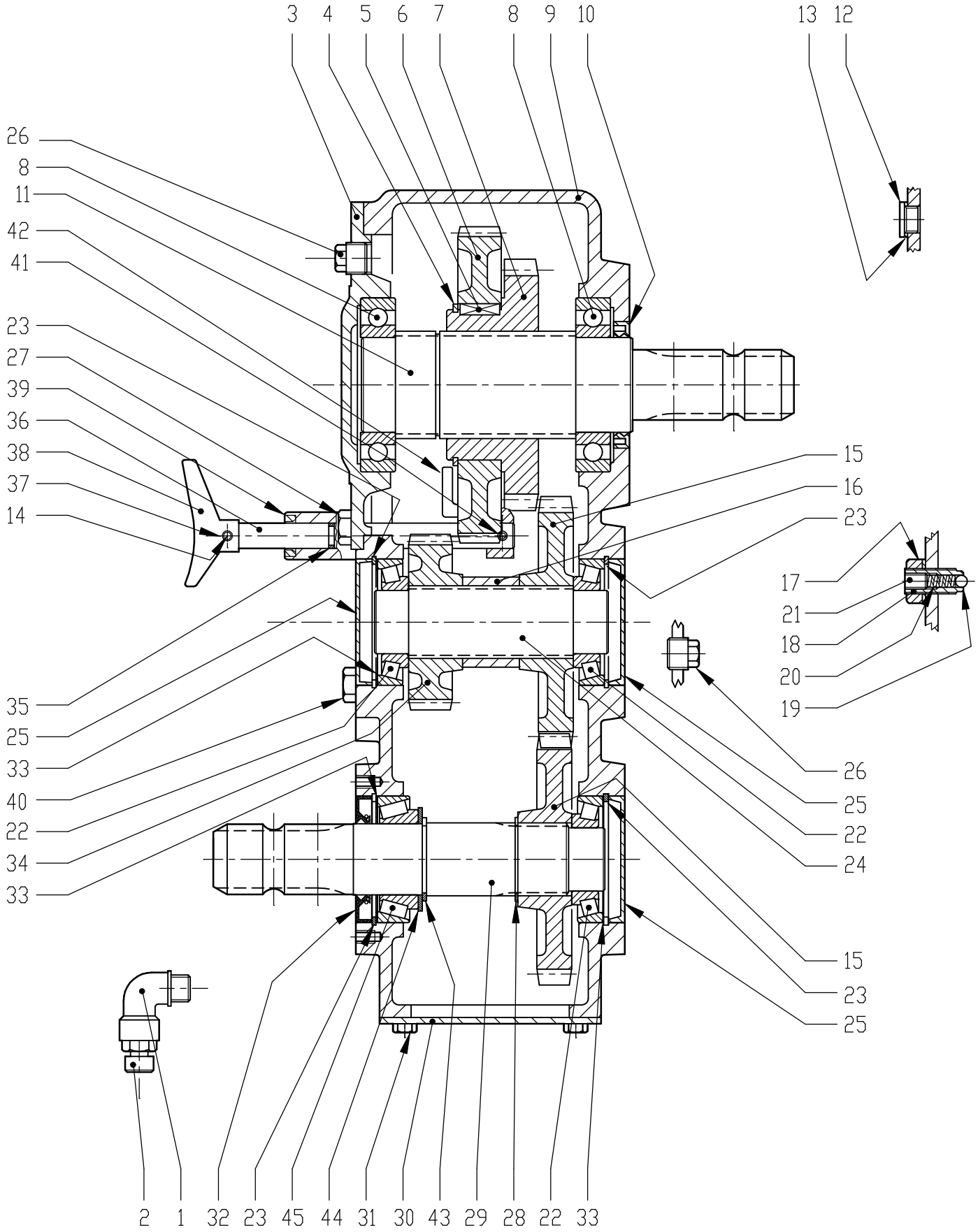

S.d.M.
00.0000

COMER INDUSTRIES S.p.A. 42046 Villanova di Reggiolo (R.E.) Italia Tel. 0522\974111 (9 Linee) Telefax 0522\973249