comer industries
gearboxes

COMPANY	REF. 5388.005.001	DESIGNATION DP-732 B
	DATE 01-08-2006	CODE 9.732.347.10

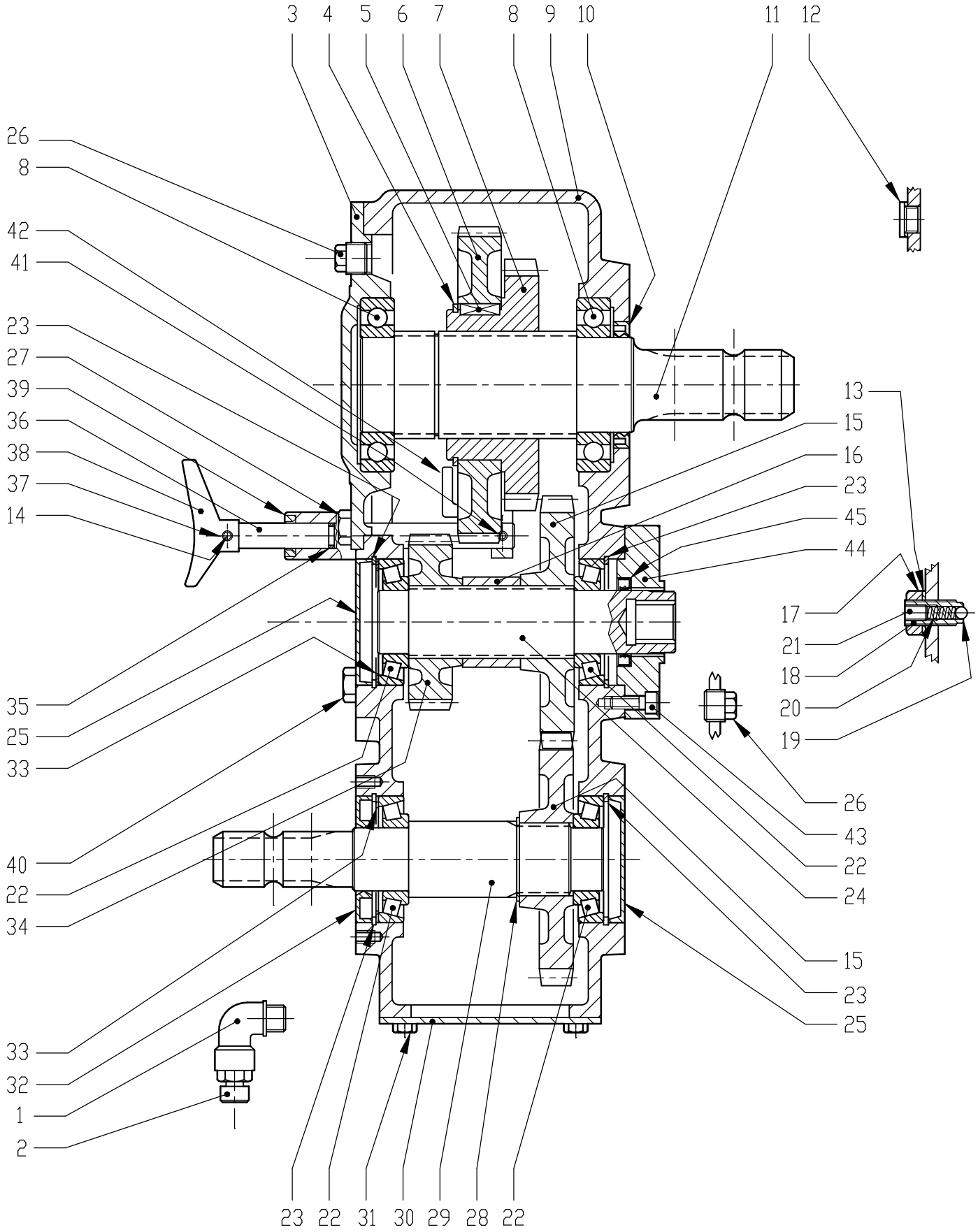

S.d.M. 10.9677

COMER INDUSTRIES S.p.A. 42046 Villanova di Reggiolo (R.E.) Italia Tel. 0522\974111 (9 Linee) Telefax 0522\973249

DESIGNATION GEAR BOX DP-732B	CODE N° 9.732.347.10

POS.	DRG. N.	PIEC	DESCRIPTION
1	8.6.0.01245	1	ELBOW 90° 1/2"GAS
2	8.6.7.00269	1	OIL FILLER PLUG 1/2"GAS
3	0.732.1300.00	1	COVER
4	8.5.1.01452	1	SNAP RING 95 UNI7435
5	8.4.1.01453	1	PARALLEL KEY A14X9X25
6	0.732.6007.00	1	GEAR Z64 M3
7	0.732.6006.00	1	GEAR Z29 M5
8	8.0.1.00067	2	BALL BEARING 6212
9	0.732.0502.00	1	CASING
10	8.7.1.00069	1	DOUBLE LIP SEAL 60X80X10
11	0.732.3212.00	1	SHAFT 1"3/4 Z20
12	0.404.7131.00	1	PLUG 3/8"GAS
13	8.3.3.00400	1	SPRING WASHER 17.16x22x2
14	8.4.5.01209	1	SPRING PIN DIN 3,5X30
15	0.732.5004.00	2	GEAR Z29 M5
16	0.732.7100.00	1	SPACER
17	8.2.1.01458	1	NUT M16 8
18	0.732.7107.00	1	SCREW
19	8.5.9.00323	1	BALL 11/32"8,7MM
20	0.721.7101.00	2	SPRING
21	8.1.9.01514	1	BOLT M10X14 14,9
22	8.0.9.00024	4	BEARING 30208
23	8.5.2.00030	4	SNAP RING 80 UNI7437
24	0.732.3204.00	1	SHAFT
25	8.7.0.00790	2	CAP 80X10
26	8.6.5.00203	2	PLUG 1/2"GAS
27	8.1.1.00061	8	BOLT M10X25 8,8
28	8.5.1.00260	1	SNAP RING 46 UNI7435
29	0.732.2000.00	1	SHAFT 1"3/8
30	1.732.1301.00	1	COVER
31	8.1.1.00326	4	BOLT M8X16 8,8
32	8.7.3.00027	1	OIL SEAL 40X80X10
33	0.110.7500.00	2	SHIM 79,7
34	0.732.6005.00	1	GEAR Z34 M3
35	8.7.6.01853	1	O-RING OR-3043
36	0.732.7010.00	1	LEVER
37	8.4.5.00605	1	SPRING PIN 6X30DIN1481
38	0.732.7002.00	1	KNOB
39	8.7.0.01294	1	WIPER RING AS16-22-3/4
40	0.732.7109.00	1	BOLT
41	8.4.5.01524	1	SPRING PIN 6X24DIN1481
42	0.732.7011.00	1	FORK
43	8.1.2.01679	2	BOLT M8X22 8.8
44	0.732.7035.00	1	FLANGE
45	8.7.3.00044	1	OIL SEAL 40X56X8