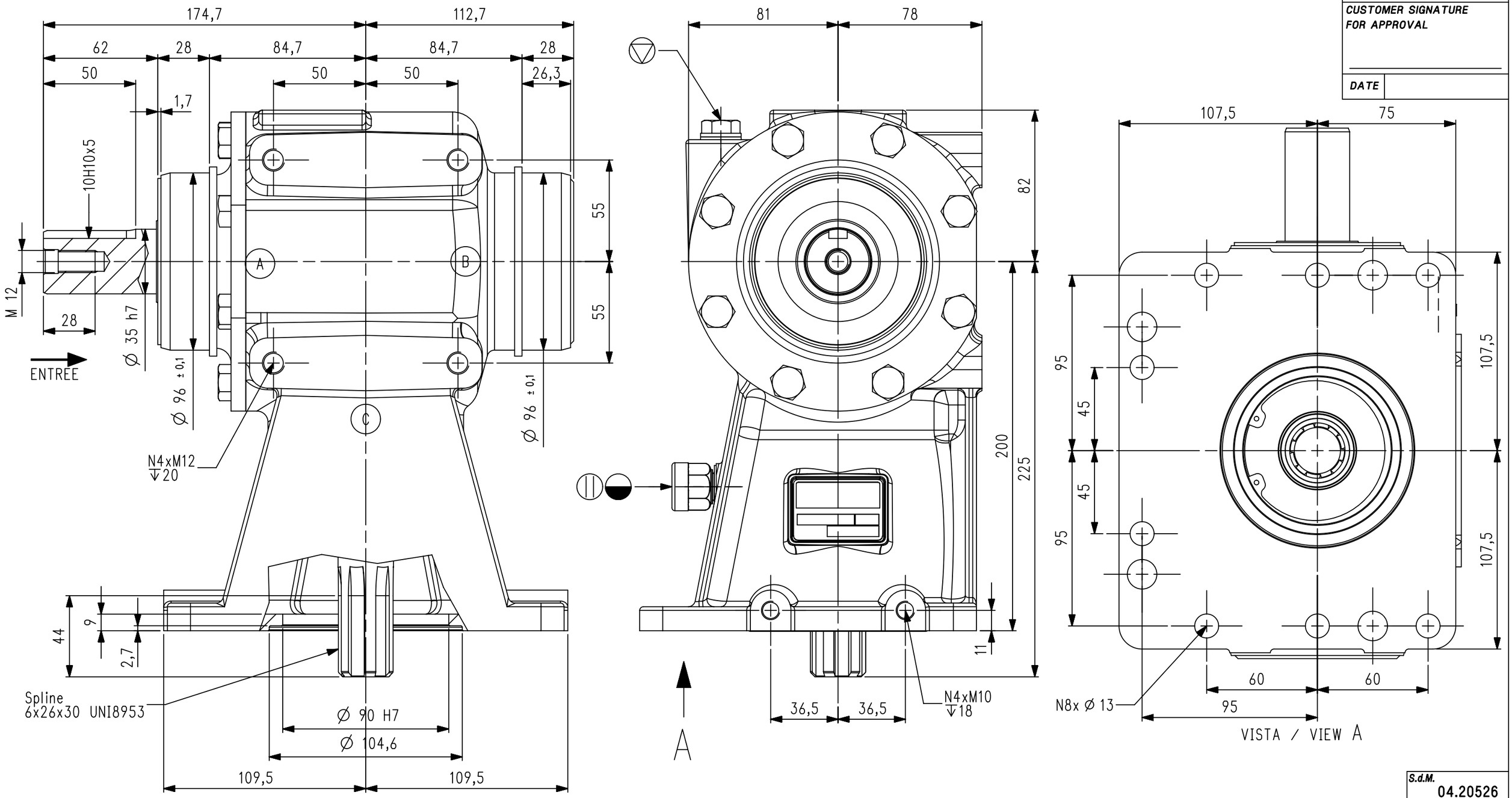

CUSTOMER

CUSTOMER SIGNATURE FOR APPROVAL

DATE

S.d.M. 04.20526

Rapporto / Ratio / Verhätnis / Rapport	1 : 2.06	Giri in entrata g/min. / Input speed r.p.m. / Eingangsdrehzahl u/min. / Tours en entree tr/min.	1080	Potenza in entrata / Input power / Eingangsleistung / Puissance en entree	45 HP / 33 kW
Coppia in uscita / Output torque moment / Ausgangsdrehmoment / Couple en sortie	14 da Nm				

	Oil	Grease
Lubrificante	☒	☐
Lubricant	Recommended Quantity	
Schmierstoff	0.7	Litres ☒
Lubrifiant		kg. ☐
Type	SAE 90 EP	

Cuscinetti / Bearings / Lager / Roulements		
	A	30207
	B	30207
	C	6307
	D	
	E	
	F	
	G	
	H	

Peso – Weight– Gewicht – Poids 22.36 kg.

	Denti diritti / Straight / Gerade / Droite	Denti elicoidali / Helicoidal / Schraubenfoermig / Helicoidale
☒	☒	☐
☐		

Tappo sfiato – Breather plug / Entluftüngsstopfen–Bouchon ventilation	
Tappo carico – filler plug / Fullstopfen – Bouchon remplissage	
Tappo livello – Level plug / Standschraube – Bouchon niveau	
Tappo scarico – Drain plug / Ablasssraube – Bouchon vidange	

In.

☒	☐	☐
1 : X	1 : 1	X : 1

Code	Customer Ref.
9.142.001.00	–

Designation	Date	Company
LF-142A	16/Jan/2017	–

comer industries gearboxes

COMER INDUSTRIES reserves the right to make any change to this product without prior public acknowledgement

COMER INDUSTRIES S.p.A. 42046 Villanova di Reggiolo (R.E.) Italia Tel. 0522\974111 (9 Linee) Telefax 0522\973249