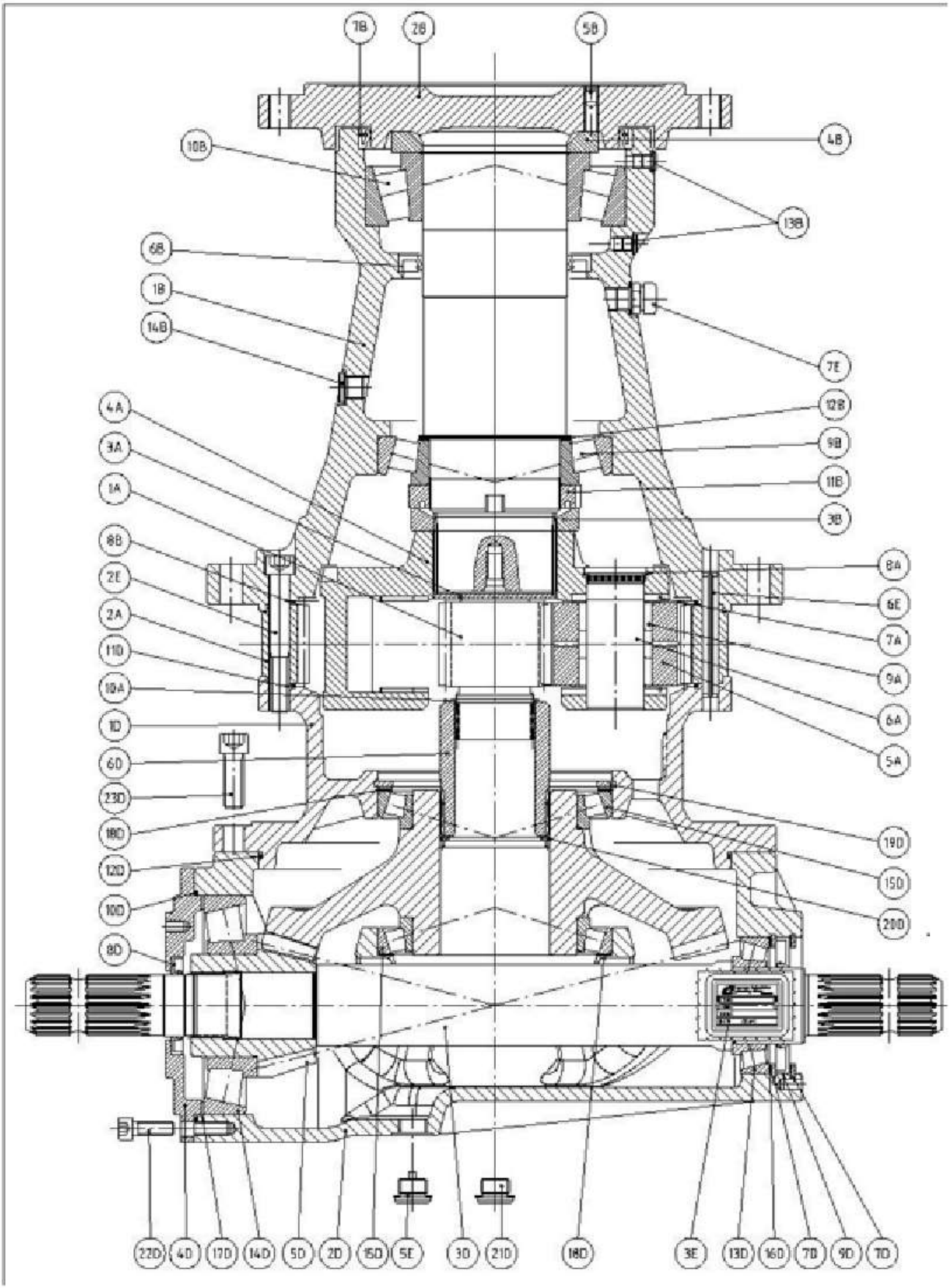
1B
2B
5B
10B
4B
13B
6B
1B
14B
7E
4A
12B
3A
9B
1A
11B
3B
8B
8A
2E
6E
2A
7A
11D
9A
10A
6A
1D
5A
6D
23D
18D
19D
12D
15D
10D
20D
8D
22D
4D
17D
14D
5D
2D
16D
5E
3D
21D
18D
3E
13D
16D
7D
9D
7D

corner Industries Planetary Drives	RIF.	COMPANY:	INDEX	COM. N°	DATE	AUTOR	PAGE N°
					26/10/10	FL	2 / 3
	RATIO	FIG. MONT.	COD.LETT.	PGA1602 VM	CODE		
	18,2/1	V37	COD.NUM.	1600	5717.000.8542		

SUBASSEMBLY CODE	POS.	DRG. Nr.	PCS.	DESCRIPTION
4717.532.108	1A	1717.563.042.i1	1	SUN GEAR R=4,83/1
	2A	1717.713.026.i1	1	CROWN
	3A	1717.125.061.i1	1	BOTTOM
	4A	1717.454.002.i1	1	CARRIER
	5A	1717.549.026.i1	3	PLANETARY GEAR R=4,83/1
	6A	1717.820.042.i1	3	PIN
	7A	1717.871.061.i1	6	WASHER
	8A	9010.305.000	3	INTERNAL CIRCLIP A45 – DIN 472
	9A	9450.177.100	225	NEEDLES DIN5402 – B 6x20 G2
	10A	9010.385.000	1	EXTERNAL CIRCLIP A58 – DIN 471
4717.573.008	1B	1717.088.002.i1	1	OUTPUT CASING
	2B	1717.213.026.i1	1	OUTPUT SHAFT
	3B	1717.824.076.i1	1	SPACER
	4B	1717.825.076.i1	1	SPACER
	5B	9540.302.030	3	BOLT M10x16 DIN 913
	6B	9020.677.001	1	OIL SEAL A 105x140x12 DIN 3760 – NB – (CORCOS)
	7B	9020.724.505	1	OIL SEAL A 180x200x15 DIN 3760 – NB – (CORCOS)
	8B	9030.377.501	1	O–RING 3,53x291,69
	9B	9110.622.001	1	TAPPERED ROLLER BEARING 30219 – (LYC)
	10B	9110.628.001	1	TAPPERED ROLLER BEARING 32221 – (LYC)
	11B	9180.444.051.i1	1	RING NUT
	12B	9479.095.109	1	SHIM KIT 95x109
	13B	9510.018.061	2	PLUG 1/8" GAS DIN 908 WITH CUPPER WASHER
	14B	9510.107.000	3	PLUG 3/8" GAS DIN 908 WITH CUPPER WASHER
4754.002.008	1D	1754.002.002.i1	1	CONNECTION FLANGE
	2D	1754.003.002.i1	1	HOUSING
	3D	1754.200.042.i1	1	SHAFT
	4D	1754.101.001.i1	1	INPUT FLANGE
	5D	1754.506.098.i1	1	RUNNING IN BEVEL GEAR SET R=3,77/1
	6D	1740.203.042.i1	1	SHAFT
	7D	9010.610.000	2	INTERNAL TOOTH WASHER D.100 DIN 472
	8D	9020.339.500	1	OIL SEAL BASL 45x72x8 DIN 3760 – NB – (CORCOS)
	9D	9020.418.000	1	OIL SEAL BASL 55x100x10 DIN 3760 – NB – (CORCOS)
	10D	9030.235.501	1	O–RING 2,62x158,42
	11D	9030.377.501	1	O–RING 3.53x291.69
	12D	9030.377.600	1	O–RING 3.53x329.79
	13D	9110.448.001	1	TAPPERED ROLLER BEARING 32211 – (LYC)
	14D	9110.571.001	1	TAPPERED ROLLER BEARING 30315 – (LYC)
	15D	9110.650.001	2	TAPPERED ROLLER BEARING T4CB120 – (LYC)
	16D	9479.085.100	1	SHIM KIT 85.3x99.7
	17D	9479.140.160	1	SHIM KIT 140.3x159.6
	18D	9479.150.169	2	SHIM KIT 150.3x169.5
	19D	9010.680.000	1	INTERNAL TOOTH WASHER D.170 DIN 472
	20D	9010.525.000	1	INTERNAL TOOTH WASHER D.75 DIN 472
	21D	9510.204.100	3	PLUG 1/2"GAS DIN 908 WITH CUPPER WASHER
	22D	9540.312.090	8	BOLT M10x30 DIN 912
	23D	9540.430.090	12	BOLT M14x40 DIN 912
	1E			
	2E	9540.450.080	21	BOLT M14x100 DIN 912
	3E	9530.115.015	1	NAME PLATE
	4E	9510.090.000	1	VENT PLUG 3/8"GAS WITH CUPPER WASHER
	5E	9510.204.050	1	MAGNETIC PLUG 1/2" GAS DIN 908 WITH CUPPER WASHER
	6E	9490.430.350	3	PIN D.12X90 DIN 1481
	7E	9510.090.000	1	VENT PLUG 3/8GAS WITH CUPPER WASHER