AG7500-ECO Gearbox Breakdown T22

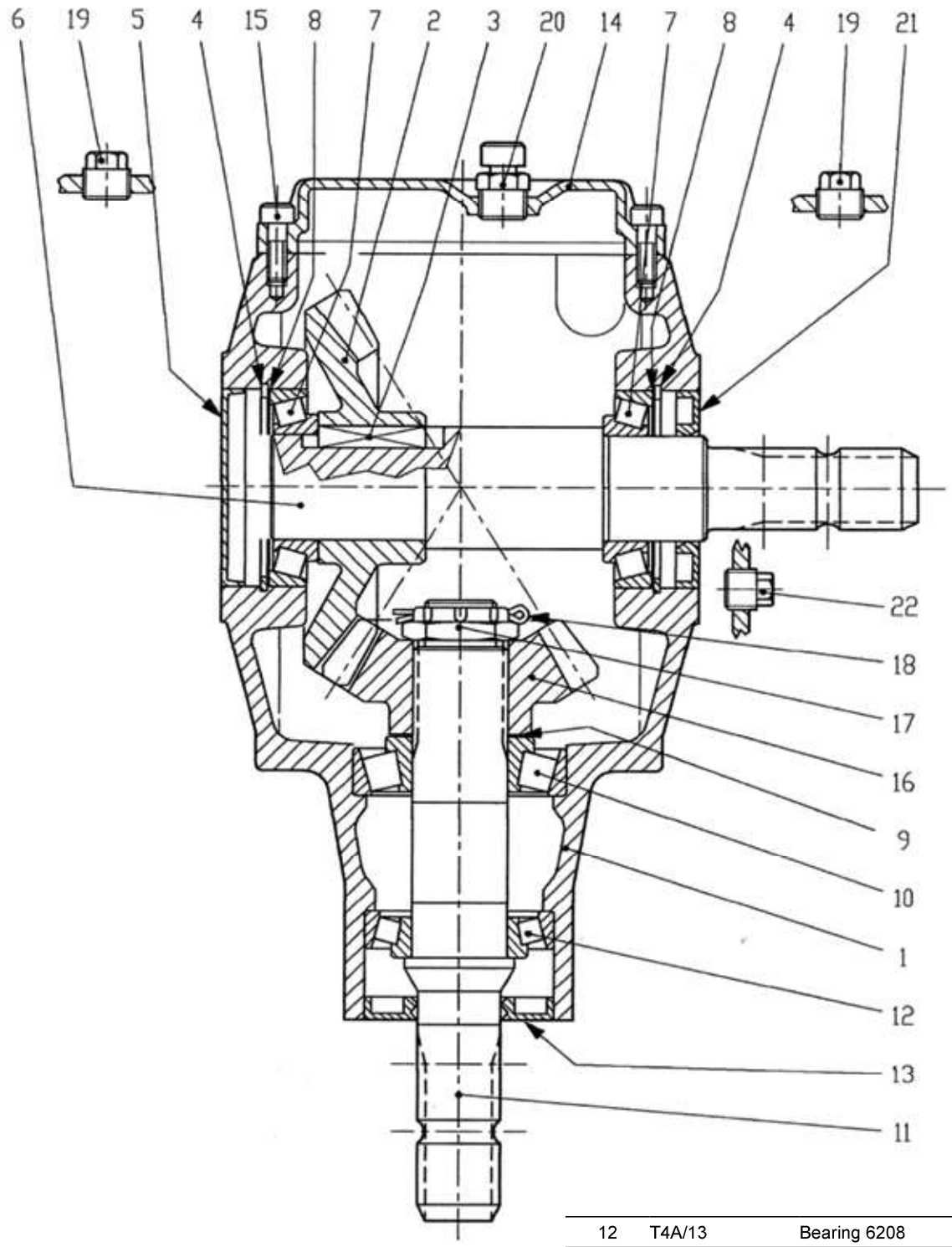

Item	Part No	Description	Qty	£
1	0.262.0505.00	Casing	1	
2	0.262.6009.00	Crown Wheel	1	
3	8.4.1.00967	Parallel Key	1	
4	8.5.2.00332	Snap Ring	2	
5	0.121.7101.00	Cap	1	
6	0.262.3000.00	Shaft	1	
7	8.0.9.00143	Bearing	2	
8	0.709.7500.00	Shim	2	
9	0.244.7500.00	Shim Kit	1	
10	8.0.9.00128	Bearing	1	
11	0.262.2002.00	Shaft	1	
12	T4A/13	Bearing 6208	1	
13	8.7.1.00315	Double Lip Seal	1	
14	0.262.1302.00	Cover	1	
15	8.1.2.00197	Bolt	6	
16	0.262.5009.00	Pinion	1	
17	0.132.7106.00	Nut	1	
18	8.4.7.01111	Cotter Pin	1	
19	8.6.5.00203	Plug	2	
20	8.6.7.00269	Oil Filler Plug	1	5.85
21	8.7.3.00331	Oil Seal	1	
22	T4A/10	PLUG 3/8"GAS	1	