www.wackergroup.com

0158431en	006
1106	

Rammer

BS 50-4
BS 50-4s

OPERATOR'S MANUAL



1. Foreword 3

2. Emission Control System Information 4

3. Safety Information 11

3.1 Operating Safety 12
3.2 Operator Safety while using Internal Combustion Engines 14
3.3 Service Safety 15
3.4 Label Locations 16
3.5 Safety Labels 17
3.6 Operating Labels 20

4. Technical Data 22

4.1 Rammer 22
4.2 Sound Measurements 23
4.3 Vibration Measurements 23
4.4 Dimensions 23

5. Operation 24

5.1 Application 24
5.2 Recommended Fuel 24
5.3 Before Starting 24
5.4 To Start 24
5.5 To Stop 25
5.6 Low Oil Shutoff Switch (if equipped) 26
5.7 Proper Operation 27
5.8 Proper Compaction 28

6. Maintenance 29

6.1 Periodic Maintenance Schedule 29
6.2 Servicing Air Cleaner 30
6.3 Engine Oil 31
6.4 Lubrication 32
6.5 Shoe Hardware 33
6.6 Long-Term Storage 33
6.7 Transportation 34
6.8 Troubleshooting 35

CALIFORNIA

Proposition 65 Warning:



Engine exhaust, some of its constituents, and certain vehicle components, contain or emit chemicals known to the State of California to cause cancer and birth defects or other reproductive harm.

1. Foreword

This manual provides information and procedures to safely operate and maintain this Wacker model. For your own safety and protection from injury, carefully read, understand and observe the safety instructions described in this manual.

Keep this manual or a copy of it with the machine. If you lose this manual or need an additional copy, please contact Wacker Corporation. This machine is built with user safety in mind; however, it can present hazards if improperly operated and serviced. Follow operating instructions carefully! If you have questions about operating or servicing this equipment, please contact Wacker Corporation.

The information contained in this manual was based on machines in production at the time of publication. Wacker Corporation reserves the right to change any portion of this information without notice.

All rights, especially copying and distribution rights, are reserved.

Copyright 2006 by Wacker Corporation.

No part of this publication may be reproduced in any form or by any means, electronic or mechanical, including photocopying, without express written permission from Wacker Corporation.

Any type of reproduction or distribution not authorized by Wacker Corporation represents an infringement of valid copyrights and will be prosecuted. We expressly reserve the right to make technical modifications, even without due notice, which aim at improving our machines or their safety standards.

2. Emission Control System Information

Source of Emissions

The combustion process produces carbon monoxide, oxides of nitrogen, and hydrocarbons. Control of hydrocarbons and oxides of nitrogen is very important because, under certain conditions, they react to form photochemical smog when subjected to sunlight. Carbon monoxide does not react in the same way, but it is toxic.

Wacker utilizes lean carburetor settings and other systems to reduce the emissions of carbon monoxide, oxides of nitrogen, and hydrocarbons.

The U.S. and California Clean Air Acts

EPA and California regulations require all manufacturers to furnish written instructions describing the operation and maintenance of emission control systems.

The following instructions and procedures must be followed in order to keep the emissions from your Wacker engine within the emissions standards.

Tampering and Altering

Tampering with or altering the emission control system may increase emissions beyond the legal limit. Among those acts that constitute tampering are:

•Removal or alteration of any part of the intake, fuel, or exhaust systems.

•Altering or defeating the speed-adjusting mechanism to cause the engine to operate outside its design parameters.

Problems That May Affect Emissions

If you are aware of any of the following symptoms, have your engine inspected and repaired by your servicing dealer.

•Hard starting or stalling after starting.

•Rough idle.

•Misfiring or backfiring under load.

•Afterburning (backfiring).

•Black exhaust smoke or high fuel consumption.

Replacement Parts

The emission control systems on your Wacker engine were designed, built, and certified to conform with EPA and California emissions regulations. We recommend the use of genuine Wacker parts whenever you have maintenance done. These original-design replacement parts are manufactured to the same standards as the original parts, so you can be confident of their performance. The use of replacement parts that are not of the original design and quality may impair the effectiveness of your emission control system.

A manufacturer of an aftermarket part assumes the responsibility that the part will not adversely affect emission performance. The manufacturer or rebuilder of the part must certify that use of the part will not result in a failure of the engine to comply with emission regulations.

Maintenance

Follow the maintenance schedule. Remember that this schedule is based on the assumption that your machine will be used for its designed purpose. Sustained high-load or high-temperature operation, or use in unusually wet or dusty conditions, will require more frequent service.

OXYGENATED FUELS

Some conventional gasolines are being blended with alcohol or an ether compound. These gasolines are collectively referred to as oxygenated fuels. To meet clean air standards, some areas of the United States and Canada use oxygenated fuels to help reduce emissions.

If you use an oxygenated fuel, be sure it is unleaded and meets the minimum octane rating requirement.

Before using an oxygenated fuel, try to confirm the fuel's contents. Some States / Provinces require this information to be posted on the pump.

The following are EPA-approved percentages of oxygenates:

ETHANOL - (ethyl or grain alcohol) 10% by volume. You may use gasoline containing up to 10% ethanol by volume. Gasoline containing ethanol may be marketed under the name "Gasohol".

MTBE - (methyl tertiary butyl ether) 15% by volume. You may use gasoline containing up to 15% MTBE by volume.

METHANOL - (methyl or wood alcohol) 5% by volume. You may use gasoline containing up to 5% methanol by volume, as long as it contains cosolvents and corrosion inhibitors to protect the fuel system. Gasoline containing more than 5% methanol by volume may cause starting and/or performance problems. It may also damage metal, rubber, and plastic parts of your fuel system.

If you notice any undesirable operating symptoms, try another service station, or switch to another brand of gasoline.

Fuel system damage or performance problems resulting from the use of an oxygenated fuel containing more than the percentages of oxygenates mentioned above are not covered under warranty.

EMISSIONS COMPONENT DEFECT WARRANTY COVERAGE

This emission warranty is applicable in all States.

Wacker Corporation, N92 W15000 Anthony Avenue, Menomonee Falls, WI 53051-1504, (herein "Wacker") warrant(“s”) to the initial retail purchaser and each subsequent owner, that this non-road engine (herein "engine") has been designed, built, and equipped to conform at the time of initial sale to all applicable regulations of the U.S. Environmental Protection Agency (EPA), and that the engine is free of defects in materials and workmanship which would cause this engine to fail to conform with EPA regulations during its warranty period.

For the components listed under PARTS COVERED, the service dealer authorized by Wacker will, at no cost to you, make the necessary diagnosis, repair, or replacement necessary to ensure that the engine complies with applicable U.S. EPA regulations.

EMISSISON COMPONENT DEFECT WARRANTY PERIOD

The warranty period for this engine begins on the date of sale to the initial purchaser and continues for a period of 2 years.

PARTS COVERED

Listed below are the parts covered by the Emission Components Defect Warranty. Some of the parts listed below may require scheduled maintenance and are warranted up to the first scheduled replacement point for that part.

(1) Fuel Metering System

(i) Carburetor and internal parts (and/or pressure regulator or fuel injection system).

(ii) Air/fuel ratio feedback and control system, if applicable.

(iii) Cold start enrichment system, if applicable.

(iv) Regulator assembly (gaseous fuel, if applicable) .

(2) Air Induction System

(i) Intake manifold, if applicable.

(ii) Air filter.

(3) Ignition System

(i) Spark plugs.

(ii) Magneto or electronic ignition system.

(iii) Spark advance/retard system, if applicable.

(4) Exhaust manifold, if applicable

(5) Miscellaneous Items Used in Above Systems

(i) Electronic controls, if applicable.

(ii) Hoses, belts, connectors, and assemblies.

(iii) Filter lock assembly (gaseous fuel, if applicable).

OBTAINING WARRANTY SERVICE

To obtain warranty service, take your engine to the nearest authorized Wacker service dealer. Bring your sales receipts indicating date of purchase for this engine. The service dealer authorized by Wacker will perform the necessary repairs or adjustments within a reasonable amount of time and furnish you with a copy of the repair order. All parts and accessories replaced under this warranty become the property of Wacker.

WHAT IS NOT COVERED

- Conditions resulting from tampering, misuse, improper adjustment (unless they were made by the service dealer authorized by Wacker during a warranty repair), alteration, accident, failure to use the recommended fuel and oil, or not performing required maintenance services.
- The replacement parts used for required maintenance services.
- Consequential damages such as loss of time, inconvenience, loss of use of the engine or equipment, etc.
- Diagnosis and inspection charges that do not result in warranty-eligible service being performed.
- Any non-authorized replacement part, or malfunction of authorized parts due to use of non-authorized parts.

OWNER'S WARRANTY RESPONSIBILITIES

As the engine owner, you are responsible for the performance of the required maintenance listed in your owner's manual. Wacker recommends that you retain all receipts covering maintenance on your engine, but Wacker cannot deny warranty solely for the lack of receipts or for your failure to ensure the performance of all scheduled maintenance. As the engine owner, you should however be aware that Wacker may deny warranty coverage if your engine or a part has failed due to abuse, neglect, improper maintenance or unapproved modifications.

You are responsible for presenting your engine to the nearest service dealer authorized by Wacker when a problem exists.

If you have any questions regarding your warranty rights and responsibilities, you should contact the WACKER CORPORATION Product Support Department (U.S.A. 1-800-770-0957, Canada 1-877-977-0775) for the information.

THINGS YOU SHOULD KNOW ABOUT THE EMISSION CONTROL SYSTEM WARRANTY:

MAINTENANCE AND REPAIRS

You are responsible for the proper maintenance of the engine. You should keep all receipts and maintenance records covering the performance of regular maintenance in the event questions arise. These receipts and maintenance records should be transferred to each subsequent owner of the engine. Wacker reserves the right to deny warranty coverage if the engine has not been properly maintained. Warranty claims will not be denied, however, solely because of the lack of required maintenance or failure to keep maintenance records.

MAINTENANCE, REPLACEMENT OR REPAIR OF EMISSION CONTROL DEVICES AND SYSTEMS MAY BE PERFORMED BY ANY REPAIR ESTABLISHMENT OR INDIVIDUAL; HOWEVER, WARRANTY REPAIRS MUST BE PERFORMED BY A SERVICE DEALER AUTHORIZED BY WACKER. THE USE OF PARTS THAT ARE NOT EQUIVALENT IN PERFORMANCE AND DURABILITY TO AUTHORIZED PARTS MAY IMPAIR THE EFFECTIVENESS OF THE EMISSION CONTROL SYSTEM AND MAY HAVE A BEARING ON THE OUTCOME OF A WARRANTY CLAIM.

If other than the parts authorized by Wacker are used for maintenance replacements or for the repair of components affecting emission control, you should assure yourself that such parts are warranted by their manufacturer to be equivalent to the parts authorized by Wacker in their performance and durability.

HOW TO MAKE A CLAIM

All repair qualifying under this limited warranty must be performed by a service dealer authorized by Wacker. In the event that any emission-related part is found to be defective during the warranty period, you shall notify WACKER CORPORATION Product Support Department (U.S.A. 1-800-770-0957, Canada 1-877-977-0775) and you will be advised of the appropriate warranty service dealer or service providers where the warranty repair can be performed.

3. Safety Information

This manual contains DANGER, WARNING, CAUTION, and NOTE callouts which must be followed to reduce the possibility of personal injury, damage to the equipment, or improper service.



This is the safety alert symbol. It is used to alert you to potential personal injury hazards. Obey all safety messages that follow this symbol to avoid possible injury or death.



DANGER

DANGER indicates a hazardous situation which, if not avoided, will result in death or serious injury.



WARNING

WARNING indicates a hazardous situation which, if not avoided, could result in death or serious injury.



CAUTION

CAUTION indicates a hazardous situation which, if not avoided, could result in minor or moderate injury.

CAUTION: Used without the safety alert symbol, CAUTION indicates a potentially hazardous situation which, if not avoided, may result in property damage.

Note: *Contains additional information important to a procedure*.

3.1 Operating Safety



WARNING Familiarity and proper training are required for the safe operation of equipment. Equipment operated improperly or by untrained personnel can be dangerous. Read the operating instructions contained in both this manual and the engine manual and familiarize yourself with the location and proper use of all controls. Inexperienced operators should receive instruction from someone familiar with the equipment before being allowed to operate the machine.

3.1.1 NEVER operate this machine in applications for which it is not intended.

3.1.2 NEVER allow anyone to operate this equipment without proper training. People operating this equipment must be familiar with the risks and hazards associated with it.

3.1.3 NEVER touch the engine or muffler while the engine is on or immediately after it has been turned off. These areas get hot and may cause burns.

3.1.4 NEVER use accessories or attachments that are not recommended by Wacker. Damage to equipment and injury to the user may result.

3.1.5 NEVER leave machine running unattended.

3.1.6 NEVER tamper with or disable the function of operating controls.

3.1.7 NEVER use choke to stop engine.

3.1.8 NEVER operate the machine in areas where explosions may occur.

3.1.9 ALWAYS read, understand, and follow procedures in the Operator's Manual before attempting to operate the equipment.

3.1.10 ALWAYS be sure that all other persons are at a safe distance from the machine. Stop the machine if people step into the working area of the machine.

3.1.11 ALWAYS be sure operator is familiar with proper safety precautions and operation techniques before using machine.

3.1.12 ALWAYS wear protective clothing appropriate to the job site when operating equipment.

3.1.13 ALWAYS wear hearing protection when operating equipment.

3.1.14 ALWAYS keep hands, feet, and loose clothing away from moving parts of the machine.

3.1.15 ALWAYS use common sense and caution when operating the machine.

3.1.16 ALWAYS be sure the rammer will not tip over, roll, slide, or fall when not being operated.

3.1.17 ALWAYS turn the engine OFF when the rammer is not being operated.

3.1.18 ALWAYS guide the rammer in such a way that the operator is not squeezed between the rammer and solid objects. Special care is required when working on uneven ground or when compacting coarse material. Make sure to stand firmly when operating the machine under such conditions.

3.1.19 ALWAYS operate the rammer in such a way that there is no danger of it turning over or falling in, when working near the edges of breaks, pits, slopes, trenches and platforms.

3.1.20 ALWAYS store the equipment properly when it is not being used. Equipment should be stored in a clean, dry location out of the reach of children.

3.1.21 ALWAYS close fuel valve on engines equipped with one when machine is not being operated.

3.1.22 ALWAYS operate machine with all safety devices and guards in place and in working order. DO NOT modify or defeat safety devices. DO NOT operate machine if any safety devices or guards are missing or inoperative.

3.2 Operator Safety while using Internal Combustion Engines



DANGER

Internal combustion engines present special hazards during operation and fueling. Read and follow the warning instructions in the engine owner's manual and the safety guidelines below. Failure to follow the warnings and safety guidelines could result in severe injury or death.

3.2.1 DO NOT smoke while operating the machine.

3.2.2 DO NOT smoke when refueling the engine.

3.2.3 DO NOT refuel a hot or running engine.

3.2.4 DO NOT refuel the engine near an open flame.

3.2.5 DO NOT spill fuel when refueling the engine.

3.2.6 DO NOT run the engine near open flames.

3.2.7 DO NOT run the machine indoors or in an enclosed area such as a deep trench unless adequate ventilation, through such items as exhaust fans or hoses, is provided. Exhaust gas from the engine contains poisonous carbon monoxide gas; exposure to carbon monoxide can cause loss of consciousness and may lead to death.

3.2.8 ALWAYS refill the fuel tank in a well-ventilated area.

3.2.9 ALWAYS replace the fuel tank cap after refueling.

3.2.10 ALWAYS check the fuel lines and the fuel tank for leaks and cracks before starting the engine. Do not run the machine if fuel leaks are present or the fuel lines are loose.

3.3 Service Safety



WARNING

Poorly maintained equipment can become a safety hazard! In order for the equipment to operate safely and properly over a long period of time, periodic maintenance and occasional repairs are necessary.

3.3.1 DO NOT attempt to clean or service the machine while it is running. Rotating parts can cause severe injury.

3.3.2 DO NOT operate the machine without an air cleaner.

3.3.3 DO NOT remove air cleaner cover, paper element, or precleaner while engine is running.

3.3.4 DO NOT alter engine speeds. Run the engine only at speeds specified in the Technical Data Section.

3.3.5 DO NOT crank a flooded engine with the spark plug removed on gasoline-powered engines. Fuel trapped in the cylinder will squirt out the spark plug opening.

3.3.6 DO NOT test for spark on gasoline-powered engines if the engine is flooded or the smell of gasoline is present. A stray spark could ignite the fumes.

3.3.7 DO NOT use gasoline or other types of fuels or flammable solvents to clean parts, especially in enclosed areas. Fumes from fuels and solvents can become explosive.

3.3.8 ALWAYS replace the safety devices and guards after repairs and maintenance.

3.3.9 ALWAYS keep the area around the muffler free of debris such as leaves, paper, cartons, etc. A hot muffler could ignite the debris and start a fire.

3.3.10 ALWAYS do Periodic Maintenance as recommended in the Operator's Manual.

3.3.11 ALWAYS clean debris from engine cooling fins.

3.3.12 ALWAYS replace worn or damaged components with spare parts designed and recommended by Wacker Corporation.

3.3.13 ALWAYS disconnect the spark plug on machines equipped with gasoline engines, before servicing, to avoid accidental start-up.

3.3.14 ALWAYS keep the machine clean and labels legible. Replace all missing and hard-to-read labels. Labels provide important operating instructions and warn of dangers and hazards.

3.4 Label Locations

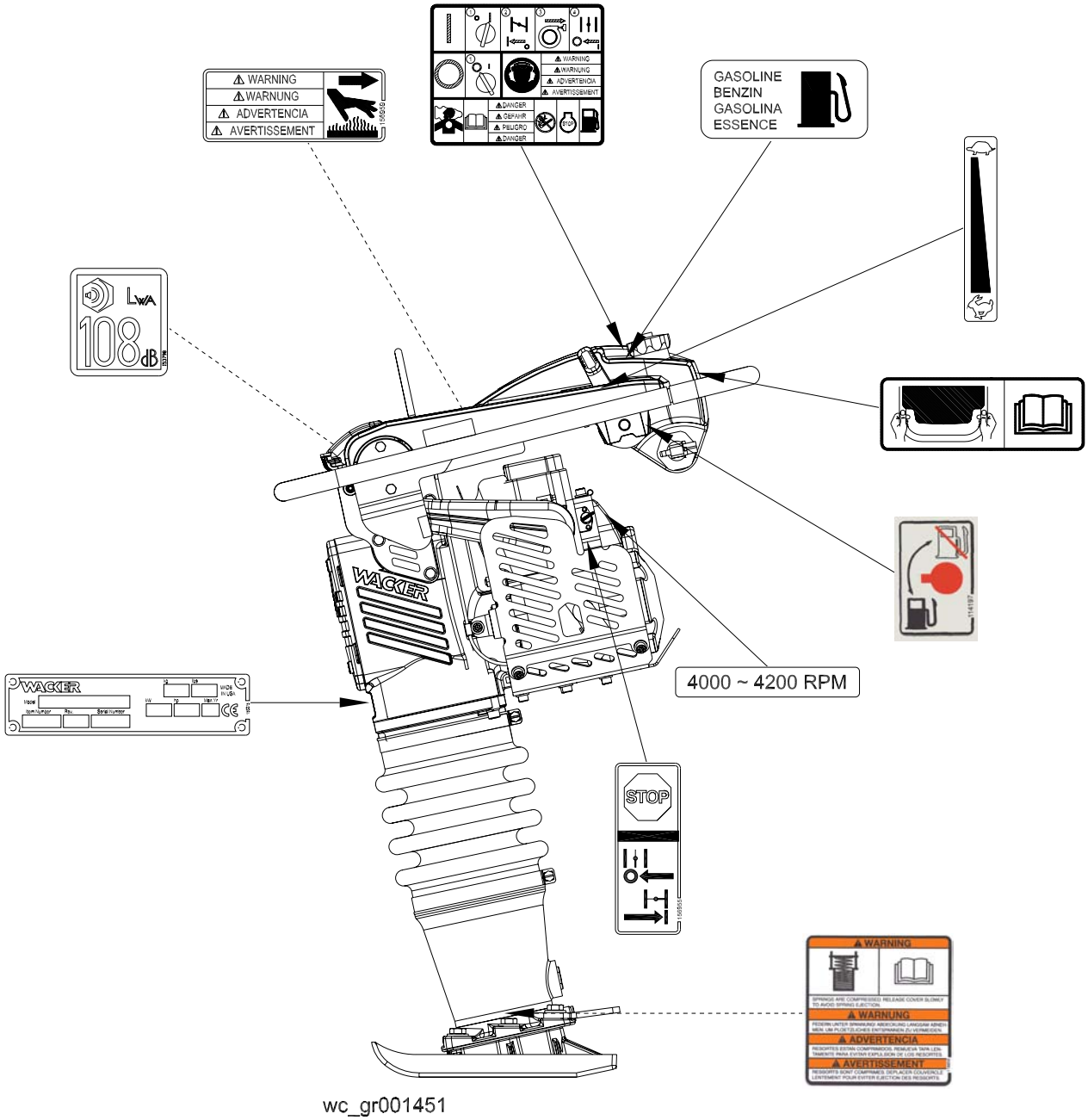

wc_gr001451

3.5 Safety Labels

Wacker machines use international pictorial labels where needed. These labels are described below:

Label	Meaning
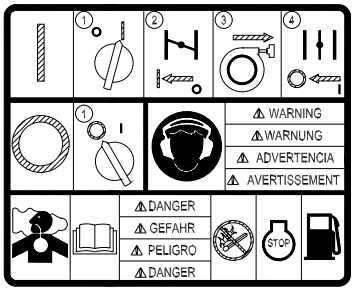	This molded-in label contains important safety and operating information. If it becomes illegible, the cover must be replaced. Refer to the Parts Book for ordering information.
	DANGER! Engines emit carbon monoxide; operate only in well-ventilated area.
	Read the operator's manual for machine information.
	DANGER! No sparks, flames or burning objects near machine.
	Shut off the engine before refueling.

Label	Meaning
	CAUTION! Use only clean, filtered gasoline fuel.
	WARNING! Hot surface!
	WARNING! Serious injury if struck by compressed spring or cover. If the spring system cover is removed improperly, the springs can eject.
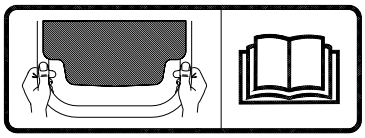	For optimal control, performance, and minimal hand/arm vibration, grasp handle as shown. Refer to Section *Proper Operation* for further details.
	Guaranteed sound power level in dB(A)
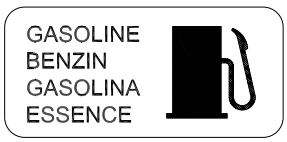	CAUTION! Use only clean, filtered gasoline fuel.

Label	Meaning
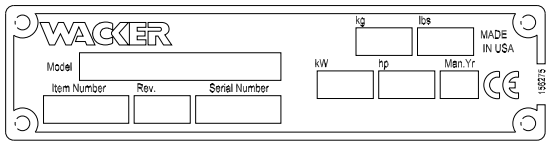	A nameplate listing the model number, item number, revision number, and serial number is attached to each unit. Please record the information found on this plate so it will be available should the nameplate become lost or damaged. When ordering parts or requesting service information, you will always be asked to specify the model number, item number, revision number, and serial number of the unit.
	This machine may be covered by one or more patents.

3.6 Operating Labels

Wacker machines use international pictorial labels where needed. These labels are described below:

Label	Meaning
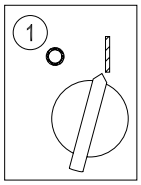	Turn the engine switch to the ON position.
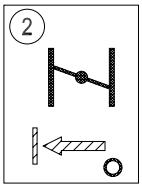	Close the choke.
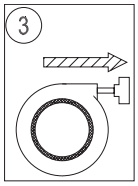	Pull the rewind starter.
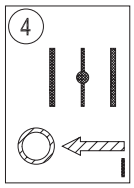	Open the choke.
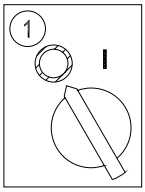	Turn the engine switch to "OFF".

Label	Meaning
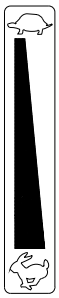	Throttle control lever: Turtle = Idle or Slow Rabbit = Full or Fast
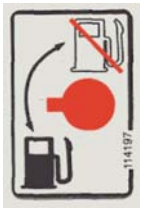	Fuel valve: Closed Open
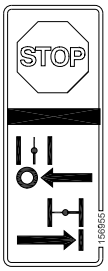	Engine stop button: Press to stop engine. Choke: 0 = Open I = Closed
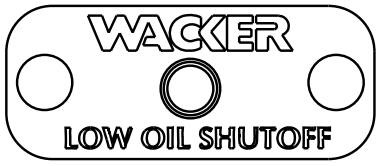	This rammer is equipped with a low oil shutoff switch, it will not allow the engine to operate unless a sufficient amount of oil is present. See section *Low Oil Shutoff Switch*.

4. Technical Data

4.1 Rammer

Item Number:		**BS 50-4** 0009386, 0620077 0620108	**BS 50-4s** 0620071, 0620078
Rammer			
Engine Model	type	WM90	
Engine Speed - full	rpm	4300 ± 100	
Engine Speed - idle	rpm	2000 ± 100	
Clutch Engagement	rpm	2500 ± 100	
Spark Plug	type	NGK BM4A or BMR4A	
Electrode Gap	mm (in)	0.6–0.7 (0.023–0.028)	
Cylinder Head Compression (cold)	bar/cm^3 (psi)	8.0–9.7 (120–140)	
Air Cleaner	type	Three stage with cyclonic precleaner	
Engine Lubrication	oil grade	SAE 10W30 SE, SF or higher	
Engine Oil Capacity	ml (oz.)	300 (10)	
Fuel Tank Capacity	l (qts.)	3.0 (3.2)	
Fuel	type	Regular unleaded gasoline	
Fuel Consumption	l(qt.)/hr	1.2 (1.3)	
Running Time	hour	2.5	
Ramming System Lubrication	oil grade	SAE 10W30	
Ramming System Capacity	ml (oz.)	562 (19)	

4.2 Sound Measurements

Products are tested for sound pressure level in accordance with EN ISO 11204. Sound power level is tested in accordance with European Directive 2000/14/EC - Noise Emission in the Environment by Equipment for use outdoors.

- the sound pressure level at operator's location (L_{pA}) = 99 dB(A).
- the guaranteed sound power level (L_{WA}) = 108 dB(A).

4.3 Vibration Measurements

Products are tested for hand/arm vibration (HAV) level in accordance with ISO 5349, EN1033, and EN500-4 where applicable.

- HAV 8.6 m/s^2

  Refer to Section *Proper Operation* for further details.

4.4 Dimensions

mm (in.)

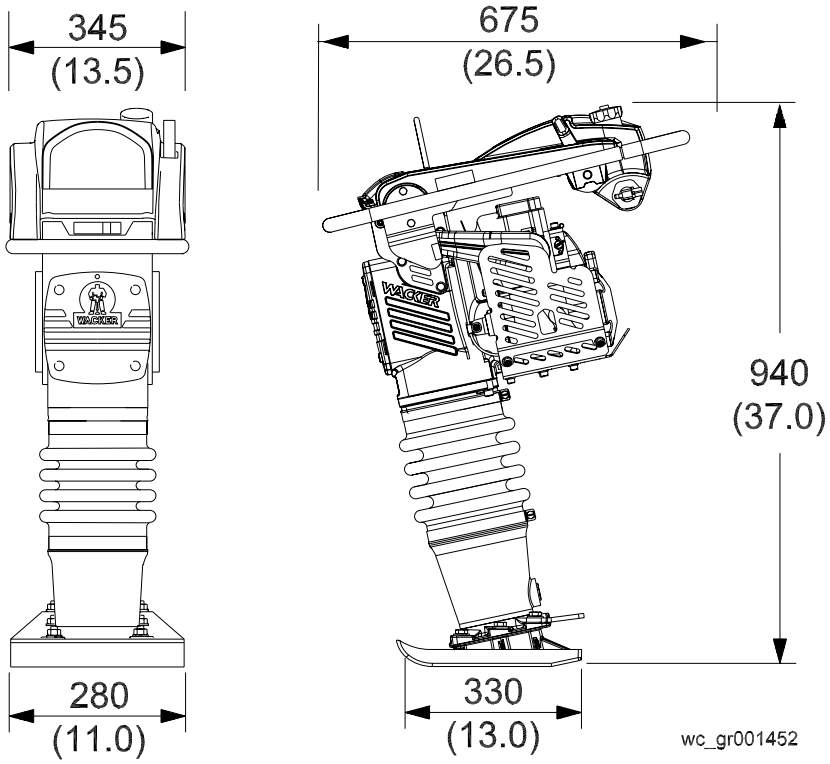

5. Operation

5.1 Application

Rammers are designed to compact loose soils and gravel to prevent settling and to provide a firm, solid base for the placement of footings, concrete slabs, foundations, and other structures.

5.2 Recommended Fuel

This engine is certified to operate on automotive unleaded gasoline. Use only fresh, clean gasoline. Gasoline containing water or dirt will damage fuel system.

5.3 Before Starting

5.3.1 Read safety instructions at the beginning of this manual.

5.3.2 Make sure that the gas tank is full.

5.3.3 Check engine oil level.

5.3.4 Place rammer on loose soil or gravel. DO NOT start rammer on hard surfaces such as asphalt or concrete.

5.4 To Start

See Graphic: wc_gr001454

Note: *After transporting the rammer horizontally, upright the rammer and allow the oil to drain back through the engine. It may take up to 2 minutes for the oil level to recover.*

5.4.1 Open fuel valve **(e)**.

5.4.2 Turn engine switch to "ON" **(d)**.

5.4.3 If the engine is cold, close choke **(b1)** on the carburetor.

Note: *Occasionally, warm engines will need to be choked.*

5.4.4 With throttle in idle position **(c2)**, pull the starter rope **(a)** until the engine starts.

5.4.5 On engines equipped with the low oil shutoff switch, see section *Low Oil Shutoff Switch* for additional information.

Note: *First time use, engines recently serviced, run out of fuel or not used for long periods of time may need the rope to be pulled more times to move fuel to the carburetor.*

5.4.6 Open choke **(b2)** on the carburetor as the engine warms up.

Note: *A cold engine should be allowed to warm up at the idle position* **(c2)** *for approximately one (1) minute. Failure to open the choke after the engine attempts to start may cause flooding.*

CAUTION: Always open choke **(b2)** with throttle in idle position **(c2)**. Opening choke with throttle not in idle position **(c2)** may result in rammer motion.

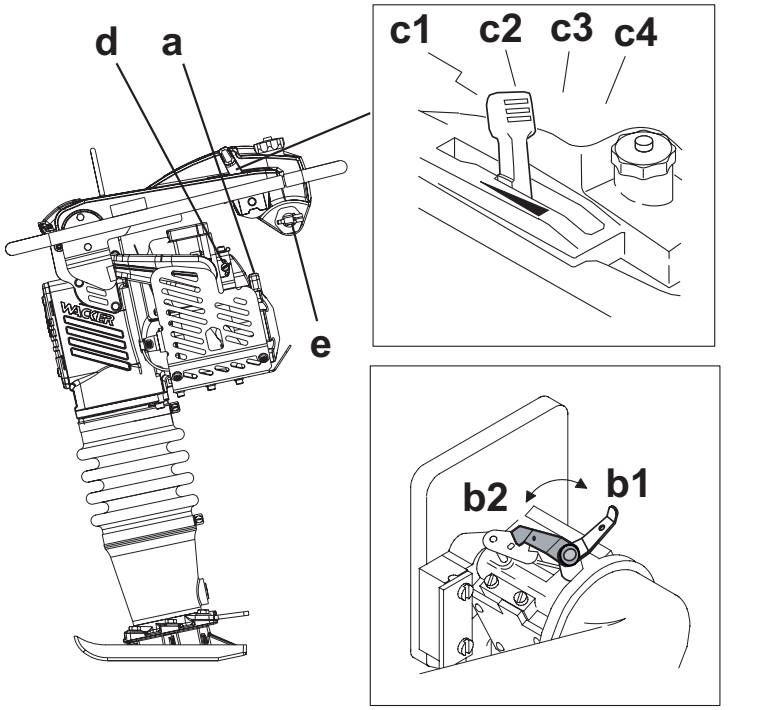

wc_gr001454

5.5 To Stop

See Graphic: wc_gr001454

5.5.1 Place throttle in the idle position **(c2)**.

5.5.2 Turn engine switch to "OFF" **(d)**.

5.5.3 Close fuel valve **(e)**.

5.6 Low Oil Shutoff Switch (if equipped)

The low oil shutoff switch is designed to prevent engine damage caused by an insufficient amount of oil.

When starting the machine:

- if the warning light flashes quickly once, this indicates the engine oil level is acceptable.
- if the warning light flashes slowly, the engine will start but shut off after 10-12 seconds, this indicates that the engine oil level is low. Add oil to the engine. See *Technical Data* for oil quantity and type.
- if the warning light stays on continuously, the engine will start and continue to run but the low oil shutoff switch is not functioning properly. Check the switch for proper wire connections. If the light continues to stay on, replace the switch.
- if the warning light does not flash quickly once, and the engine starts and continues to run, the low oil shutoff switch is not functioning properly. Check the switch for proper wire connections and grounding. If the light still does not flash when starting the machine, replace the switch.

5.7 Proper Operation

See Graphic: wc_gr002612, wc_gr001455

Keep vibratory rammer clean and dry. Avoid no-load strokes. Never allow the rammer to run full throttle when forcing away material or when lifting the equipment.

For optimal control, performance, and minimal hand/arm vibration, grasp handle as shown. Hand/arm vibration (HAV) has been optimized for this positioning. Reported HAV levels are measured at position **A** just in front of the hand position shown in conformance with EN1033 and ISO 5349.

CAUTION: To prevent damage to the rammer, do not allow the rammer to run on its side.

If the rammer should tip on its side, place the rammer in the position shown, then shut off the engine by turning engine switch to "OFF".

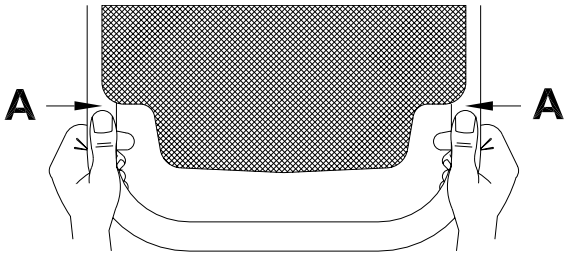

wc_gr002612

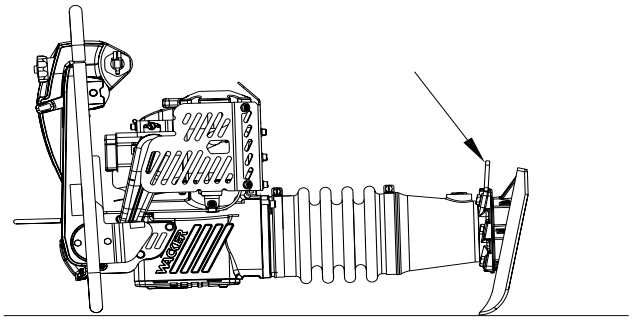
wc_gr001455

5.8 Proper Compaction

See Graphic: wc_gr000045

5.8.1 Run rammer at the full throttle position **(a4)** for maximum performance.

5.8.2 Guide rammer with its handle. Allow machine to pull itself forward. DO NOT try to over-power the machine.

5.8.3 For best compaction, the shoe must hit the ground flat **(b)**, not on its toe or heel. This will save on excessive shoe wear.

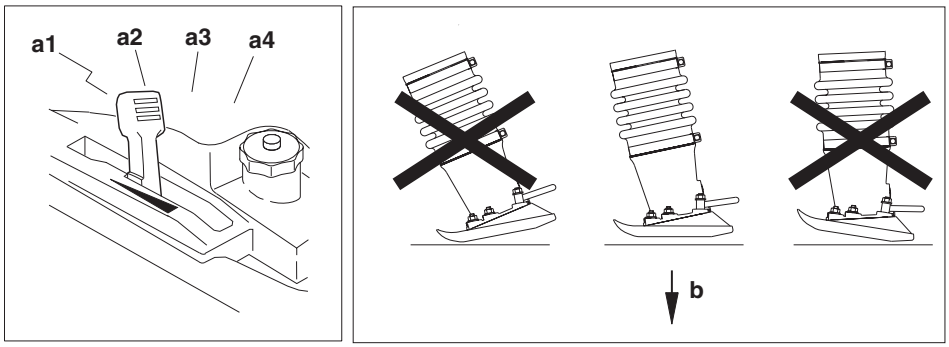

wc_gr000045

6. Maintenance

6.1 Periodic Maintenance Schedule

Maintenance, replacement, or repair of the emission control devices and systems may be performed by any non-road engine repair establishment or individual.

	Daily before starting	After first 5 hours	Every week or 25 hours	Every month or 100 hours	Every 3 months or 300 hours	Every Year
Check fuel level. Check engine oil level.	■					
Inspect air filter. Replace as needed.	■					
Check oil level in sightglass.	■					
Check fuel line and fittings for cracks or leaks. Replace as needed.	■					
Tighten ramming shoe hardware.		■	■			
Check external hardware.		■	■			
Clean engine cooling fins.			■			
Clean and check spark plug gap.			■			
Change engine oil.				■		
Replace spark plug.				■		
Clean recoil starter.					■	
Change ramming system oil.*					■	
Inspect crane lifting cable for wear, damage, or abuse.					■	
Inspect fuel filter.						■

* Change ramming system oil after first 50 hours of operation.
Note: *If engine performance is poor, check, clean, and replace air filter elements as needed.*

6.2 Servicing Air Cleaner

See Graphic: wc_gr001306

WARNING

NEVER use gasoline or other types of low flash point solvents for cleaning the air filter. A fire or explosion could result.

CAUTION: NEVER run engine without main paper air cleaner **(b)**. Severe engine damage will occur.

Clean elements using the following procedure:

6.2.1 Remove air cleaner cover **(a)**. Remove main paper filter element **(b)** and secondary prefilter **(c)** and inspect them for holes or tears. Replace if damaged.

6.2.2 Main paper filter element **(b)**: Replace paper element if it appears heavily soiled.

6.2.3 Prefilter **(c)**: Clean with low-pressure compressed air. When very soiled, wash in solution of mild detergent and warm water. Rinse thoroughly in clean water. Allow to dry thoroughly before reinstalling.

Note: *Do not oil prefilter*.

6.2.4 Wipe out filter housing **(d)** with a clean cloth. Do not use compressed air.

CAUTION: Do not allow dirt to get into the engine intake port **(k)** while cleaning - damage to engine will result.

6.2.5 Check that the precleaner debris ejector slot **(i)** is clear.

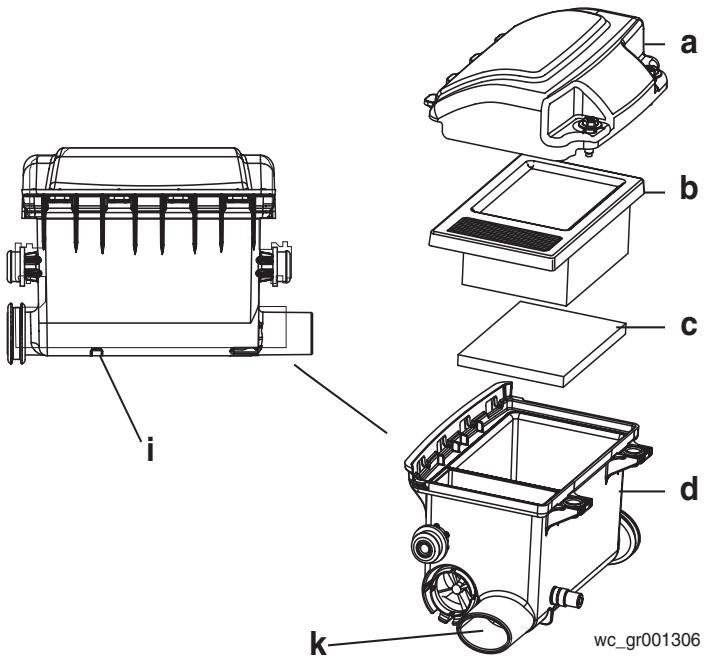

6.3 Engine Oil

See Graphic: wc_gr002431

6.3.1 Drain oil while engine is still warm.

Note: *In the interests of environmental protection, place a plastic sheet and a container under the machine to collect any liquid which drains off. Dispose of this liquid in accordance with environmental protection legislation.*

6.3.2 Place the rammer so it is resting on its shoe on a level surface.

6.3.3 Remove the oil fill plug **(a)** and drain plug **(b)** to drain oil.

6.3.4 Install the drain plug **(b)**.

6.3.5 Fill the engine crankcase with recommended oil up to the level of the plug opening **(c)**. Do not thread in the dipstick to check the level. See *Technical Data* for oil quantity and type.

6.3.6 Install the oil filler plug **(a)**.

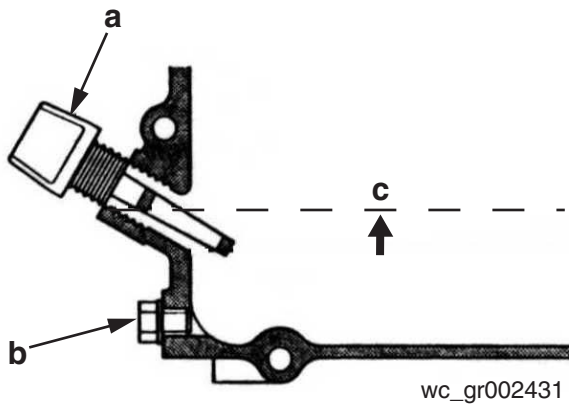

6.4 Lubrication

See Graphic: wc_gr001456

Ramming system

Check oil level:

6.4.1 Place the rammer so it is resting on its shoe on a level surface.

6.4.2 Check the oil level through oil sightglass **(d)**. Proper ramming system lubrication is indicated when approximately 1/2–3/4 of the sightglass is full.

6.4.3 If the oil is not visible, oil must be added through the sightglass port. Tilt rammer forward and remove sightglass **(d)**. See *Technical Data* for oil quantity and type.

6.4.4 Wrap the sightglass threads with teflon tape. Install the sightglass **(d)**. Torque to 9 Nm (6 ft.lbs.).

Oil change:

6.4.1 To drain oil, remove sightglass **(d)** and tilt the machine back until it is resting on its handle.

Note: *In the interests of environmental protection, place a plastic sheet and a container under the machine to collect any liquid which drains off. Dispose of this liquid in accordance with environmental protection legislation.*

6.4.2 Remove sightglass **(d)** and fill with oil. See *Technical Data* for oil quantity and type. Wrap the sightglass threads with teflon tape. Install the sightglass **(d)**. Torque to 9 Nm (6 ft.lbs.).

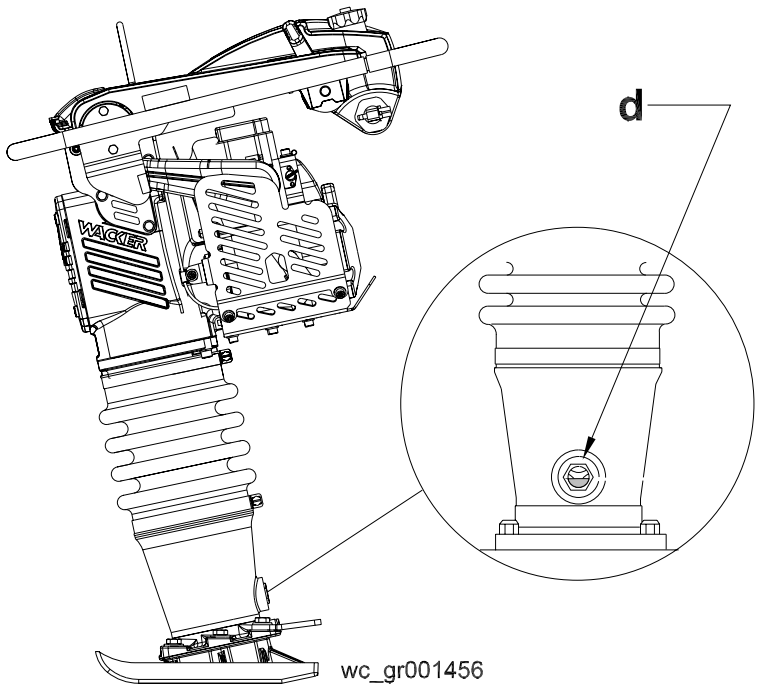

wc_gr001456

6.5 Shoe Hardware

See Graphic: wc_gr000048

On new machines, or after replacing shoe, check and tighten shoe hardware **(a)** after the first 5 hours of operation. Inspect hardware every week thereafter.

Torque hardware as specified.

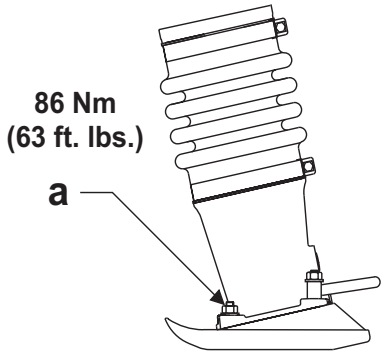

wc_gr000048

6.6 Long-Term Storage

6.6.1 Drain fuel from tank.

6.6.2 Start engine and run until remaining fuel is used.

6.6.3 Remove spark plug. Pour approximately 30 ml (1 oz.) of clean SAE 10W30 engine oil into cylinder through spark plug opening.

6.6.4 Pull starter rope slowly to distribute oil in engine.

6.6.5 Re-install spark plug.

6.7 Transportation

See Graphic: wc_gr001457

6.7.1 Always shut off engine and close fuel valve when transporting machine.

6.7.2 Make sure lifting device has enough capacity to hold machine (see identification plate on machine for weight).

6.7.3 Use central lifting point **(a)** when lifting machine.

WARNING

Always inspect crane lifting cable for wear, damage, or abuse. Protect cable from any sharp edges. Do not use if there are any signs of cut wires, excessive wear, or other defects. Replace damaged cable immediately to avoid injury or death.

6.7.4 Wacker recommends transporting rammers upright whenever possible; however, a rammer should not be allowed to fall over.

If the rammer cannot be secured in the upright position, tie down the rammer to the transport vehicle to prevent it from tipping, falling, or rolling. Lay the rammer down only as shown below and tie it to the vehicle at points **(a)** and **(b)**.

CAUTION: Drain the fuel tank as required to prevent fuel leaking from the cap **(c)**.

NOTE: *After transporting the rammer horizontally, upright the rammer and allow the oil to drain back through the engine. It may take up to 2 minutes for the oil level to recover.*

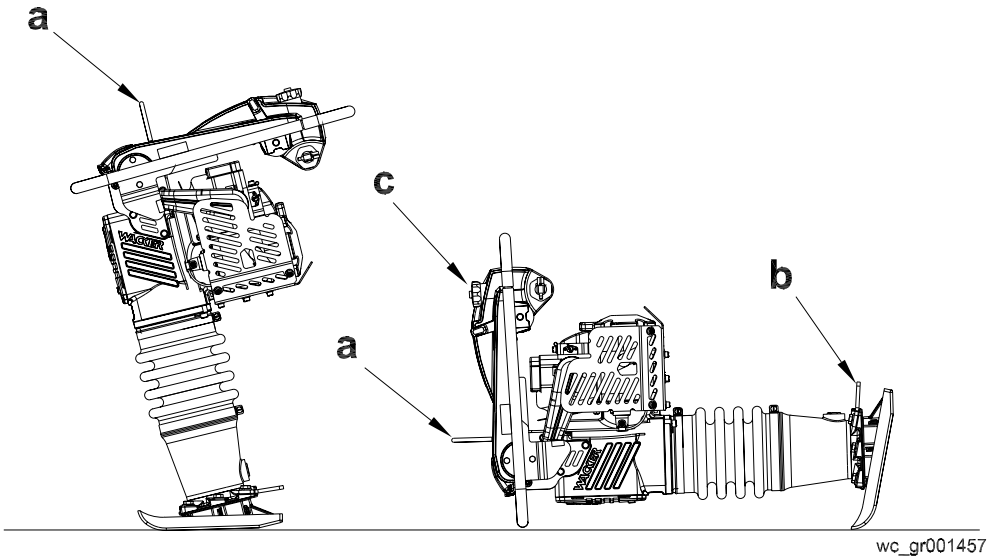

6.8 Troubleshooting

Problem / Symptom	Reason / Remedy
Engine does not start, or stalls.	• No fuel in tank. • Check engine oil level. • Spark plug fouled. • Fuel valve closed. • Engine switch is in the “OFF” position.
Engine does not accelerate, is hard to start, or runs erratically.	• Spark plug fouled. • Crankshaft seals are leaking. • Check air cleaner. • Check engine oil level.
Engine overheats.	• Clean cooling fins and fan blades.
Engine runs, rammer does not tamp.	• Inspect clutch for damage. Replace if necessary. • Broken connecting rod or crankgear. • Low engine performance. Compression loss.
Engine runs, rammer operation is erratic.	• Oil/grease on clutch. • Broken/worn springs. • Soil buildup on ramming shoe. • Broken parts in ramming system or crankcase. • Engine operating speed is too high.
On machines equipped with the low oil shutoff switch, the warning light flashes slowly, the engine starts but shuts off after 10-12 seconds.	• Engine oil level is low. Add oil to the engine. See *Technical Data* for oil quantity and type.

Problem / Symptom	Reason / Remedy
On machines equipped with the low oil shutoff switch, the engine starts and continues to run but the low oil warning light stays on continuously.	• Check the switch for proper wire connections. • Switch is not functioning properly. Replace the switch.
On machines equipped with the low oil shutoff switch, the engine starts and continues to run, but the low oil warning light did not flash quickly once.	• Check the switch for proper wire connections and grounding. • Switch is not functioning properly. Replace the switch.

EC DECLARATION OF CONFORMITY
CE-KONFORMITÄTSERKLÄRUNG
DECLARACIÓN DE CONFORMIDAD DE LA CE
DÉCLARATION DE CONFORMITÉ C.E.

WACKER CORPORATION, N92 W15000 ANTHONY AVENUE, MENOMONEE FALLS, WISCONSIN USA

AUTHORIZED REPRESENTATIVE IN THE EUROPEAN UNION BEVOLLMÄCHTIGTER VERTRETER FÜR DIE EUROPÄISCHE GEMEINSCHAFT REPRESENTANTE AUTORIZADO EN LA UNIÓN EUROPEA REPRÉSENTANT AGRÉÉ AUPRÈS DE L'UNION EUROPÉENNE	**WACKER CONSTRUCTION EQUIPMENT AG** **Preußenstraße 41** **80809 München**

hereby certifies that the construction equipment specified hereunder / bescheinigt, daß das Baugerät / certifica que la máquina de construcción / atteste que le matériel :

1. Category / Art / Categoría / Catégorie **Vibratory Rammers**
   Vibrationsstampfer
   Apisonadoras Vibratorias
   Pilonneuses Vibrantes

2. Type - Typ - Tipo - Type **BS 50-4, BS 60-4**

3. Item number of equipment / Artikelnummer / Número de referencia de la máquina / Numéro de référence du matériel :

0009386, 0620108, 0620071, 0620078, 0009340, 0620000, 0620051, 0620109, 0620110, 0620072, 0620073, 0620074, 0620077

4. Net installed power / absolute installierte Leistung / Potencia instalada neta / Puissance installée nette :

2,1 kW

Has been sound tested per Directive 2000/14/EC / In Übereinstimmung mit Richtlinie 2000/14/EG bewertet worden ist / Ha sido ensayado en conformidad con la norma 2000/14/CE / A été mis à l'épreuve conforme aux dispositions de la directive 2000/14/CEE :

Conformity Assessment Procedure / Konformitätsbewertungsverfahren / Procedimiento para ensayar conformidad / Procédé pour l'épreuve de conformité	Name and address of notified body / Bei folgender einbezogener Prüfstelle / Oficina matriculadora / Organisme agrée	Measured sound power level / Gemessener Schallleistungspegel / Nivel de potencia acústica determinado / Niveau de puissance acoustique fixé	Guaranteed sound power level / Garantierter Schallleistungspegel / Nivel de potencia acústica garantizado / Niveau de puissance acoustique garanti
Annex VIII / Anhang VIII **Anexo VIII / Annexe VIII**	**BSI, 389 Chiswick High Road, London W4 4AL United Kingdom**	**107 dB(A)**	**108 dB(A)**

and has been produced in accordance with the following standards:
und in Übereinstimmung mit folgenden Richtlinien hergestellt worden ist:
y ha sido fabricado en conformidad con las siguientes normas:
et a été produit conforme aux dispositions des directives européennes ci-après :

2000/14/EC
2002/88/EC
89/336/EEC
98/37/EEC
EN 500-1
EN 500-4

William Lahner
Vice President of Engineering

Greg Orzal
Manager, Product Engineering

24.02.06
Date / Datum / Fecha / Date

WACKER CORPORATION

Wacker Construction Equipment AG · Preußenstraße 41 · D-80809 München · Tel.: +49-(0)89-3 54 02 - 0 · Fax: +49 - (0)89-3 54 02-3 90
Wacker Corporation · P.O. Box 9007 · Menomonee Falls, WI 53052-9007 · Tel. : (262) 255-0500 · Fax: (262) 255-0550 · Tel. : (800) 770-0957
Wacker Asia Pacific Operations · Skyline Tower, Suite 2303, 23/F · 39 Wang Kwong Road, Kowloon Bay, Hong Kong · Tel. +852 2406 60 32 · Fax: +852 2406 60 21