www.wackergroup.com

0160393en	004
1006	

Trench Roller

RT 56-SC
RT 82-SC

REPAIR MANUAL

0160393EN

This manual covers machines with Item Number:

0009025, 0009026

Operating / Parts Information

You must be familiar with the operation of this machine before you attempt to troubleshoot or repair it. Basic operating and maintenance procedures are described in the Operator's Manual supplied with the machine. Keep a copy of the Operator's Manual with the machine at all times. Use the separate Parts Book supplied with the machine to order replacement parts. If you are missing either of the documents, please contact Wacker Corporation to order a replacement.

Damage caused by misuse or neglect of the unit should be brought to the attention of the operator to prevent similar occurrences from happening in the future.

This manual provides information and procedures to safely repair and maintain the above Wacker model(s). For your own safety and protection from injury, carefully read, understand, and observe all instructions described in this manual. THE INFORMATION CONTAINED IN THIS MANUAL IS BASED ON MACHINES MANUFACTURED UP TO THE TIME OF PUBLICATION. WACKER CORPORATION RESERVES THE RIGHT TO CHANGE ANY PORTION OF THIS INFORMATION WITHOUT NOTICE.

CALIFORNIA

Proposition 65 Warning:



WARNING

Engine exhaust, some of its constituents, and certain vehicle components, contain or emit chemicals known to the State of California to cause cancer and birth defects or other reproductive harm.

All rights, especially copying and distribution rights, are reserved.

Copyright 2006 by Wacker Corporation

No part of this publication may be reproduced in any form or by any means, electronic or mechanical, including photocopying, without express written permission from Wacker Corporation.

Any type of reproduction or distribution not authorized by Wacker Corporation represents an infringement of valid copyrights, and violators will be prosecuted. We expressly reserve the right to make technical modifications, even without due notice, which aim at improving our machines or their safety standards.

1. Safety Information 5

1.1 Laws Pertaining to Spark Arresters 5
1.2 Operating Safety 6
1.3 Operator Safety while using Internal Combustion Engines 8
1.4 Service Safety 8
1.5 Label Locations 10
1.6 Warning and Informational Labels 11

2. Technical Data 15

2.1 Engine 15
2.2 Roller 16
2.3 Lubrication 17
2.4 Sound and Vibration Measurements 18
2.5 Dimensions 18

3. Operation 19

3.1 Information Regarding Operation 19
3.2 Operation and Service Locations 20
3.3 Control Panel 24
3.4 SmartControl™ Transmitter 26
3.5 Infra-red System and Control Channels 30
3.6 Before Starting 32
3.7 Starting 33
3.8 Stopping 34
3.9 Operation 35

4. Maintenance 36

4.1 Transporting Machine 36
4.2 Lifting Machine 36
4.3 Job Site Storage 37
4.4 Storage 38
4.5 New Machines 38
4.6 Periodic Maintenance Schedules 39
4.7 Hydraulic Oil Requirements 40

4.8 Hydraulic Oil Level 40
4.9 Changing Hydraulic Oil & Filter 41
4.10 Articulated Joint, Steering Cylinder, and Hood Hinges 42
4.11 Cleaning SmartControl™ Transmitter 42
4.12 Drive Gearcase 43
4.13 Exciter Lubrication 44
4.14 Scrapers 45
4.15 Shockmounts 45
4.16 Changing Drums 46
4.17 Battery 47
4.18 Engine Oil System 48
4.19 Engine Oil and Filter 49
4.20 Air Cleaner 50
4.21 Engine Fuel Delivery System Maintenance 51
4.22 Fuel Filter 51
4.23 Priming the Fuel System 52
4.24 Engine Coolant 52
4.25 Valve Clearances 53
4.26 Adjusting Engine Fan Belt 54
4.27 Wiring Schematic 56
4.28 Basic Troubleshooting 58

5. Engine Starting Troubleshooting 60

5.1 Component Locations 60
5.2 Troubleshooting Flowcharts 61
5.3 Engine Does Not Crank—Flowchart 1A 62
5.4 Checking 20A Fuse 64
5.5 Checking Starter Circuit at Trailer Plug 64
5.6 Checking Receiving Eyes 65
5.7 Replacing Receiving Eye/Light Ring 66
5.8 Checking Power to Starter Solenoid 68
5.9 Replacing Keyswitch 70
5.10 Checking NiCad Battery Charge 71
5.11 Engine Cranks But Does Not Start—Flowchart 2A 72
5.12 Checking Fuel Line at Fuel Rail Inlet 74
5.13 Checking 50A Circuit Breaker 74
5.14 Checking Power to Glow Plugs 75
5.15 Checking Glow Plugs 75
5.16 Checking Relay Wiring 76
5.17 Confirming a Malfunctioning Relay 77

5.18 Testing ECM 78
5.19 Checking Fuel Solenoid 79
5.20 Replacing Battery 80
5.21 Replacing Trailer Plug 81

6. Hydraulic System 83

6.1 Hydraulic Manifold 84
6.2 Hydraulic Valves 85
6.3 Hydraulic System Pressures 85
6.4 Hydraulic Schematics 86
6.5 Hydraulic Diagram 90
6.6 Hydraulic Diagram Components 91
6.7 Exciter Circuit 92
6.8 Drive and Brake Circuit 96
6.9 High-Speed Drive and Brake Circuit 100
6.10 Steering Circuit 102

7. Hydraulic Troubleshooting 105

7.1 No Vibration—Flowchart 3A 105
7.2 Checking Power to, and Operation of, Decoder Module 106
7.3 Replacing Decoder Module 108
7.4 Checking Solenoid Lead 110
7.5 Checking Solenoids 110
7.6 Replacing Solenoid 111
7.7 Checking Pressure at Gauge Port 1 (G-P1) 112
7.8 Checking Function of Exciter Motors 113
7.9 No Steering Troubleshooting—Flowchart 4A 114
7.10 No Travel Troubleshooting—Flowchart 5A 115
7.11 Checking Pressure at Gauge Port 2 (G-P2) 116
7.12 Checking Function of Brake 116
7.13 Checking Function of Drive Motors 117
7.14 No High Speed Travel Troubleshooting—Flowchart 6A 118

8. Disassembly/Reassembly Procedures 119

8.1 Tools 119
8.2 Ordering Parts 119
8.3 Reference Numbers ( ) 119
8.4 Weight Block 119
8.5 Articulated Joint 120
8.6 Drum Support Exploded View 122
8.7 Drum Support Components 123
8.8 Identifying Drum Supports 124
8.9 Removing Drums 125
8.10 Installing Drums 126
8.11 Opening Drum 126
8.12 Closing Drum 127
8.13 Disassembling Drive Hub 128
8.14 Reassembling Drive Hub 130
8.15 Disassembling Slave Hub 132
8.16 Reassembling Slave Hub 134
8.17 Rebuilding Brake 136
8.18 Exciter Exploded View 138
8.19 Exciter Parts List 139
8.20 Disassembling Exciter 140
8.21 Reassembling Exciter 142
8.22 Removing Drum Support 144
8.23 Installing Drum Support 146
8.24 Replacing Steering Cylinder 148
8.25 Replacing Valve Block 150
8.26 Replacing Fuel Tank 152
8.27 Replacing Hydraulic Tank 154
8.28 Replacing Hydraulic Pumps 156
8.29 Replacing Hydraulic Oil Cooler 158
8.30 Replacing Radiator and Shroud 160
8.31 Replacing Engine 164
8.32 Engine Alternator 168

9. Rebuilding Control Box 170

9.1 Removing/Rebuilding Joysticks 170
9.2 Removing and Installing Circuit Boards 172
9.3 Removing & Testing Control Button Circuit Board 174

1. Safety Information

This manual contains DANGER, WARNING, CAUTION, and NOTE callouts which must be followed to reduce the possibility of personal injury, damage to the equipment, or improper service.



This is the safety alert symbol. It is used to alert you to potential personal injury hazards. Obey all safety messages that follow this symbol to avoid possible injury or death.



DANGER

DANGER indicates an imminently hazardous situation which, if not avoided, will result in death or serious injury.



WARNING

WARNING indicates a potentially hazardous situation which, if not avoided, could result in death or serious injury.



CAUTION

CAUTION indicates a potentially hazardous situation which, if not avoided, may result in minor or moderate injury.

CAUTION: Used without the safety alert symbol, CAUTION indicates a potentially hazardous situation which, if not avoided, may result in property damage.

Note: *Contains additional information important to a procedure*.

1.1 Laws Pertaining to Spark Arresters

Notice: State Health Safety Codes and Public Resources Codes specify that in certain locations spark arresters be used on internal combustion engines that use hydrocarbon fuels. A spark arrester is a device designed to prevent accidental discharge of sparks or flames from the engine exhaust. Spark arresters are qualified and rated by the United States Forest Service for this purpose.

In order to comply with local laws regarding spark arresters, consult the engine distributor or the local Health and Safety Administrator.

1.2 Operating Safety



WARNING

Familiarity and proper training are required for the safe operation of equipment. Equipment operated improperly or by untrained personnel can be dangerous. Read the operating instructions contained in both this manual and the engine manual and familiarize yourself with the location and proper use of all controls. Inexperienced operators should receive instruction from someone familiar with the equipment before being allowed to operate the machine.

1.2.1 ALWAYS operate machine with all safety devices and guards in place and in working order. DO NOT modify or defeat safety devices. DO NOT operate machine if any safety devices or guards are missing or inoperative.

1.2.2 ALWAYS disengage and stow the locking bar for the articulated steering joint before operating the machine. The machine cannot be steered when the locking bar is engaged.

1.2.3 ALWAYS check that all controls are functioning properly immediately after start-up! DO NOT operate machine unless all controls operate correctly.

1.2.4 ALWAYS remain aware of changing positions and the movement of other equipment and personnel on the job site.

1.2.5 ALWAYS remain in visual contact with machine at all times while operating controls.

1.2.6 ALWAYS remain aware of changing surface conditions and use extra care when operating over uneven ground, on hills, or over soft or coarse material. The machine could shift or slide unexpectedly.

1.2.7 ALWAYS use caution when operating near the edges of pits, trenches or platforms. Check to be sure that the ground surface is stable enough to support the weight of the machine with the operator and that there is no danger of the roller sliding, falling, or tipping.

1.2.8 ALWAYS position yourself safely when operating machine in reverse or on hills. Leave enough space between yourself and the machine so you will not be placed in a hazardous position should the machine slide or tip.

1.2.9 ALWAYS use the SmartControl™ transmitter neck strap provided by Wacker while operating with the control cable connected. This neck strap is designed to break away so that the operator will not be dragged by the machine should the machine slide, tip, or fall.

1.2.10 ALWAYS wear protective clothing appropriate to the job site when operating equipment.

1.2.11 ALWAYS remain aware of moving parts and keep hands, feet, and loose clothing away from the moving parts of the equipment.

1.2.12 ALWAYS read, understand, and follow procedures in the Operator's Manual before attempting to operate the equipment.

1.2.13 ALWAYS store the equipment properly when it is not being used. Equipment should be stored in a clean, dry location out of the reach of children.

1.2.14 NEVER allow anyone to operate this equipment without proper training. People operating this equipment must be familiar with the risks and hazards associated with it.

1.2.15 NEVER touch the engine or muffler while the engine is on or immediately after it has been turned off. These areas get hot and may cause burns.

1.2.16 NEVER use accessories or attachments that are not recommended by Wacker. Damage to equipment and injury to the user may result.

1.2.17 NEVER leave machine running unattended.

1.2.18 NEVER start a defective unit in need of service or repair.

1.2.19 NEVER operate the machine with the fuel cap loose or missing.

1.2.20 NEVER operate multiple rollers within 45 feet (14 meters) of one another, unless you are certain that each roller and its accompanying transmitter have been set to a different control channel than the other rollers/transmitters being used within the area. Refer to section *Setting Control Channels* for additional information.

1.3 Operator Safety while using Internal Combustion Engines



DANGER

Internal combustion engines present special hazards during operation and fueling. Read and follow the warning instructions in the engine owner's manual and the safety guidelines below. Failure to follow the warnings and safety guidelines could result in severe injury or death.

1.3.1 DO NOT run the machine indoors or in an enclosed area such as a deep trench unless adequate ventilation, through such items as exhaust fans or hoses, is provided. Exhaust gas from the engine contains poisonous carbon monoxide gas; exposure to carbon monoxide can cause loss of consciousness and may lead to death.

1.3.2 DO NOT smoke while operating the machine.

1.3.3 DO NOT smoke when refueling the engine.

1.3.4 DO NOT refuel a hot or running engine.

1.3.5 DO NOT refuel the engine near an open flame.

1.3.6 DO NOT spill fuel when refueling the engine.

1.3.7 DO NOT run the engine near open flames.

1.3.8 ALWAYS refill the fuel tank in a well-ventilated area.

1.3.9 ALWAYS replace the fuel tank cap after refueling.

1.3.10 ALWAYS check the fuel lines and the fuel tank for leaks and cracks before starting the engine. Do not run the machine if fuel leaks are present or the fuel lines are loose.

1.3.11 ALWAYS keep the area around a hot exhaust pipe free of debris to reduce the chance of an accidental fire.

1.4 Service Safety



WARNING

Poorly maintained equipment can become a safety hazard! In order for the equipment to operate safely and properly over a long period of time, periodic maintenance and occasional repairs are necessary.

1.4.1 ALWAYS replace the safety devices and guards after repairs and maintenance.

1.4.2 ALWAYS turn engine off and remove key from machine before performing maintenance or making repairs. This is required to prevent unintentional remote starting.

1.4.3 ALWAYS secure the articulated steering joint using the locking bar before lifting, jacking, and servicing the machine. Machine halves could swing together unexpectedly and cause a serious injury.

1.4.4 ALWAYS replace missing and hard-to-read labels. See Parts Manual for ordering information.

1.4.5 ALWAYS make sure slings, chains, hooks, ramps, jacks and other types of lifting devices are attached securely and have enough weight-bearing capacity to lift or hold the machine safely. Always remain aware of the location of other people around when lifting the machine.

1.4.6 ALWAYS keep the area around the muffler free of debris such as leaves, paper, cartons, etc. A hot muffler could ignite the debris and start a fire.

1.4.7 ALWAYS replace worn or damaged components with spare parts designed and recommended by Wacker Corporation.

1.4.8 ALWAYS keep the machine clean and labels legible. Replace all missing and hard-to-read labels. Labels provide important operating instructions and warn of dangers and hazards.

1.4.9 DO NOT open hydraulic lines or loosen hydraulic connections while engine is running! Hydraulic fluid under pressure can penetrate the skin, cause burns, blind, or create other potentially dangerous hazards. Set all controls in neutral and turn engine off before loosening hydraulic lines.

1.4.10 DO NOT attempt to clean or service the machine while it is running. Rotating parts can cause severe injury.

1.4.11 DO NOT use gasoline or other types of fuels or flammable solvents to clean parts, especially in enclosed areas. Fumes from fuels and solvents can become explosive.

1.4.12 DO NOT modify the equipment without the express written approval of the manufacturer.

1.4.13 DO NOT leave SmartControl™ transmitter unattended while servicing machine.

1.4.14 ALWAYS turn the engine off before servicing the machine. If the engine has electric start, disconnect the negative terminal on the battery before servicing the machine.

1.5 Label Locations

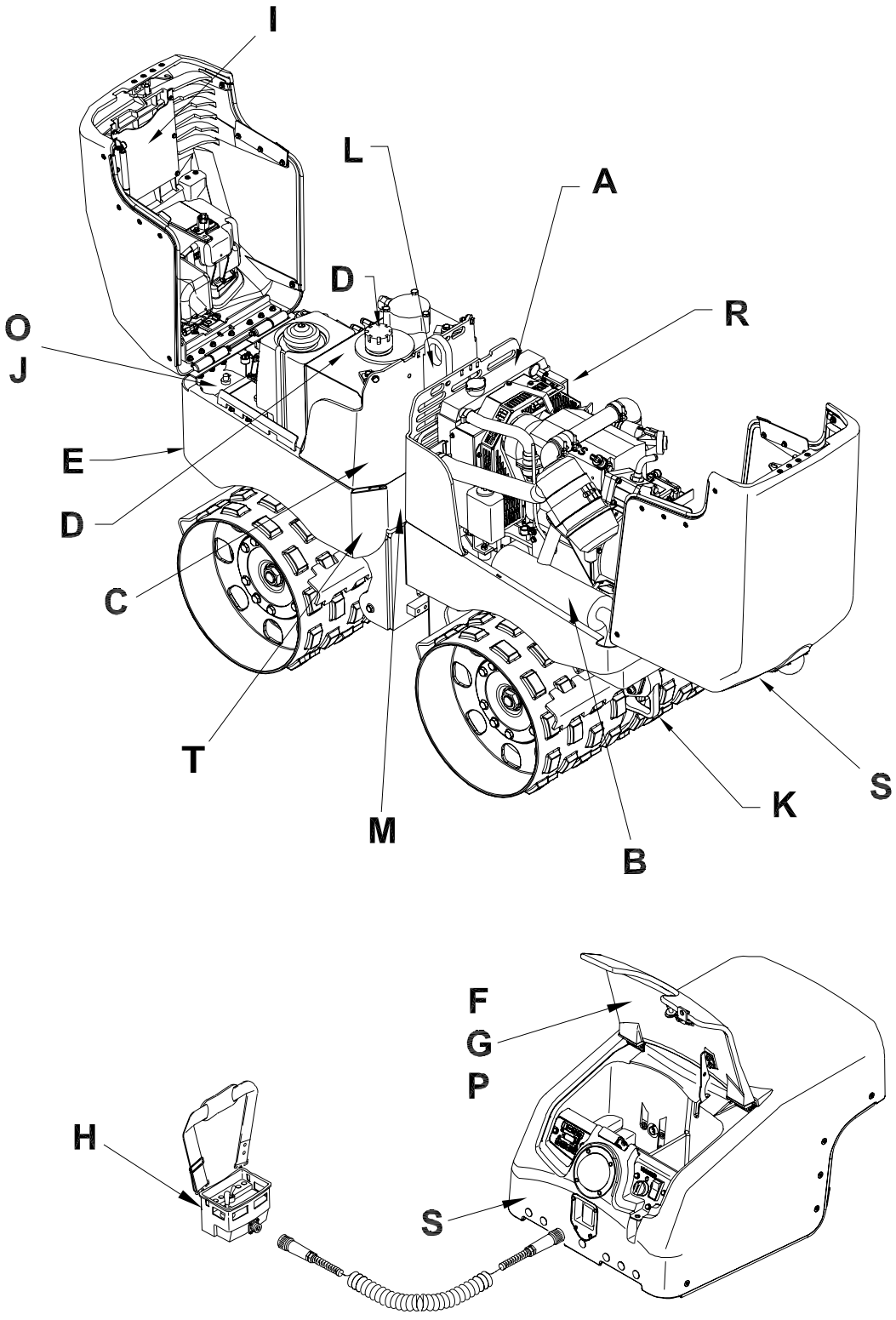

wc_gr000233

1.6 Warning and Informational Labels

Wacker machines use international pictorial labels where needed. These labels are described below:

Ref.	Label	Meaning
A		WARNING! Pressurized contents. Do not open when hot!
B		WARNING! Hot surface!
C		WARNING! Pinch point
D		Hydraulic oil reservoir fill tube
E	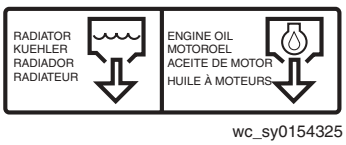	Radiator/Engine Oil

Ref.	Label	Meaning
F		DANGER! Engines emit carbon monoxide; operate only in well-ventilated area. WARNING! Read and understand the supplied Operator's Manual before operating this machine. Failure to do so increases the risk of injury to yourself or others. WARNING! To prevent hearing loss, wear hearing protection when operating this machine.
G	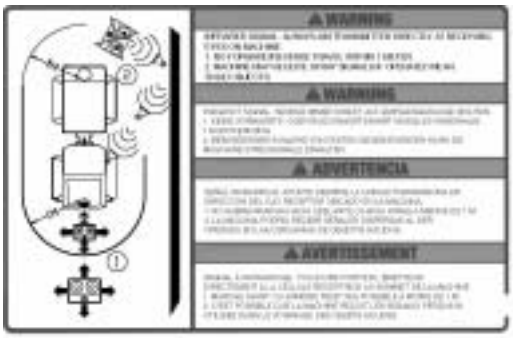	WARNING! Infrared signal: Always aim transmitter directly at receiving eye on machine. 1. No forward/reverse travel within 1 meter. 2. Machine may receive stray signals if operated near solid objects.
H	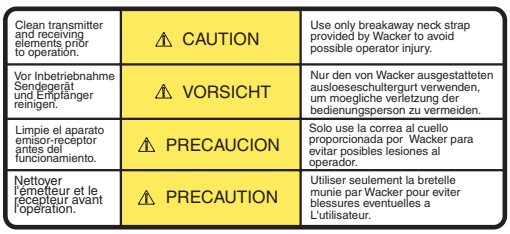	CAUTION! Clean transmitter and receiving elements prior to operation. Use only breakaway neck strap provided by Wacker to avoid possible operator injury.
I		Operator's Manual must be stored on machine. Replacement Operator's Manual can be ordered through your local Wacker distributor.

Ref.	Label	Meaning
J		WARNING! Disconnect battery before servicing. Read the Operator's Manual.
K		Tie-down point
L		CAUTION! Lifting point
M		A nameplate listing the model number, item number, revision number, and serial number is attached to each unit. Please record the information found on this plate so it will be available should the nameplate become lost or damaged. When ordering parts or requesting service information, you will always be asked to specify the model number, item number, revision number, and serial number of the unit.
N	U.S. PAT. Nos.: OTHER U.S. AND FOREIGN PATENTS PENDING	This machine may be covered by one or more patents.

Ref.	Label	Meaning
O	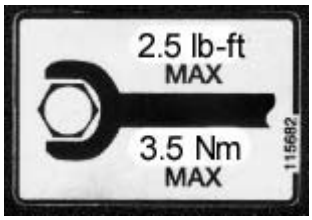	Torque battery hold-down nuts to 3.5 Nm (2.5 ft.lbs.) max.
P		CAUTION! Engine oil may enter the cylinders if machine tips over, causing possible engine damage.
Q		Guaranteed sound power level in dB(A)
R	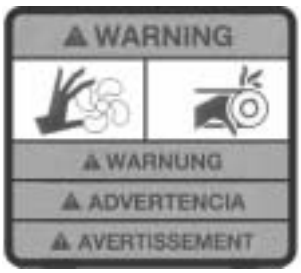	WARNING! Pinching hazard. Rotating machinery.
S		CAUTION! Do not stand within 1m (3ft) of the machine when the amber control lights are flashing. The roller will respond to remote signals when the light is flashing.
T		Hydraulic oil drain

2. Technical Data

2.1 Engine

Item No.:		RT 56-SC (0009026), RT 82-SC (0009025) Revisions 108 and lower	RT 56-SC (0009026), RT 82-SC (0009025) Revisions 109 and higher
Engine			
Engine Type		3-cylinder, 4-cycle, liquid-cooled, diesel engine	
Engine Make		Lombardini	
Engine Model		LDW 903	LDW 1003
Rated Power	kW (Hp)	15.6 (21.2) @ 3600 rpm	15.5 (20.8) @ 2600 rpm
Alternator	Amp / V	23.8 / 16.5 @ 2600 rpm	
Engine Speed - full load	rpm	2600	
Engine Speed - idle	rpm	1300	
Valve Clearance (cold) intake: exhaust:	mm (in.)	 0.15 (0.006) 0.20 (0.008)	
Air Cleaner	type	Dry pleated paper elements	
Battery	V / CCA	12V - Sealed / 800	
Fuel	type	No. 2 Diesel	
Fuel Tank Capacity	l (gal.)	18.9 (6.3)	
Fuel Consumption	l (gal.)/hr.	5.64 (0.67)	
Radiator Capacity	l (gal.)	4.75 (1.25)	

2.2 Roller

Item No:		**RT 56-SC** 0009026	**RT 82-SC** 0009025
Roller			
Operating Weight	kg (lb.)	1391 (3068)	1473 (3247)
Area Capacity	m^2 (ft^2) / hr.	668 (7260)	972 (10560)
Inside Turning Radius	m (in.)	1.9 (73)	1.6 (63)
Travel Speed	m (ft.)/min.	41.66 (136.7) High 20 (65.6) Low	
Vibration Frequency	Hz (vpm)	41.7 (2500)	
Gradeability with Vibration	%	50	
Gradeability w/o Vibration	%	45	

2.3 Lubrication

Item No:		RT 56-SC 0009026	RT 82-SC 0009025
Lubrication			
Engine Crankcase	type l (qt.)	SAE 15W40 Class CD rated 2.5 (2.5)	
Hydraulic System	type l (gal)	Premium grade, anti-wear hydraulic fluid SAE 10W30 40 (8)	
Exciter	type ml (oz.)	SAE 10W30 950 (32)	
Drum Drive Gearcase	type ml (oz.)	SAE 10W30 370 (12.5)	
Articulated Joint	type qty.	Shell Alvania No. 2 Grease as required	
Steering Cylinder	type qty.	Shell Alvania No. 2 Grease as required	
Radiator	type qty. %	Water / Glycol 50 / 50	

2.4 Sound and Vibration Measurements

Products are tested for sound pressure level in accordance with EN ISO 11204. Sound power level is tested in accordance with European Directive 2000/14/EC - Noise Emission in the Environment by Equipment for use outdoors.

The sound pressure level at operator's location (L_{pA}) = 83 dB(A).

The guaranteed sound power level (L_{WA}) = 109 dB(A).

Because this machine is operated using remote control the operator is not exposed to vibration.

2.5 Dimensions

mm(in.)

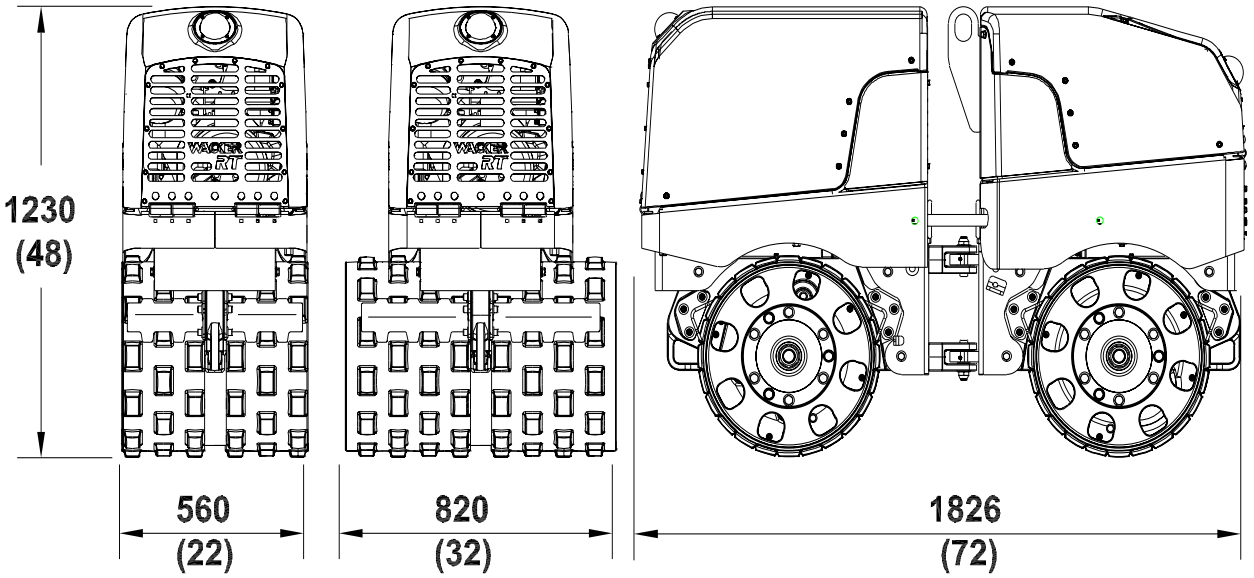

3. Operation

3.1 Information Regarding Operation

The information regarding the operation of the machine included in this manual is condensed. Refer to the Operator's Manual for complete operating instructions. Always read, understand, and follow the procedures in the Operator's Manual when operating the machine.

3.2 Operation and Service Locations

See Graphic: wc_gr000234 and wc_gr000235

Ref.	Description	Ref.	Description
1	Oil dipstick	25	Exciter fill plug
2	Engine oil drain plug	26	Exciter drain plug
3	Tie-down lugs	27	Exciter oil level plug
4	Air cleaner	28	Display panel
5	Scraper bar	29	SmartControl™ transmitter
6	Drive case fill plug	30	Charge cable
7	Drive case drain plug	31	Receiving eye/light ring
8	Drive case oil level plug	32	Oil cooler
9	Exciter pump	33	Docking port
10	Drive pump	34	Steering cylinder
11	Radiator	35	Decoder module
12	Hood latch	36	Engine control module
13	Lifting eye	37	Latch
14	Articulated joint locking bar	38	Manual holder
15	Hydraulic tank	39	Hood locking tab
16	Hydraulic tank return line filter	40	System fuse - 20A
17	Hydraulic oil level sight gauge	41	Self-resetting circuit breaker - 50A
18	Hydraulic tank drain plug	42	Charge cord / Service box receptacle
19	Articulated joint grease fitting	43	Oil PSI switch
20	Steering cylinder grease fittings	44	Air filter restriction switch
21	Fuel tank	-	---
22	Radiator drain plug	46	High water temperature switch / Glow plug timer
23	Hydraulic manifold	47	Hood hinge grease fitting
24	Battery		

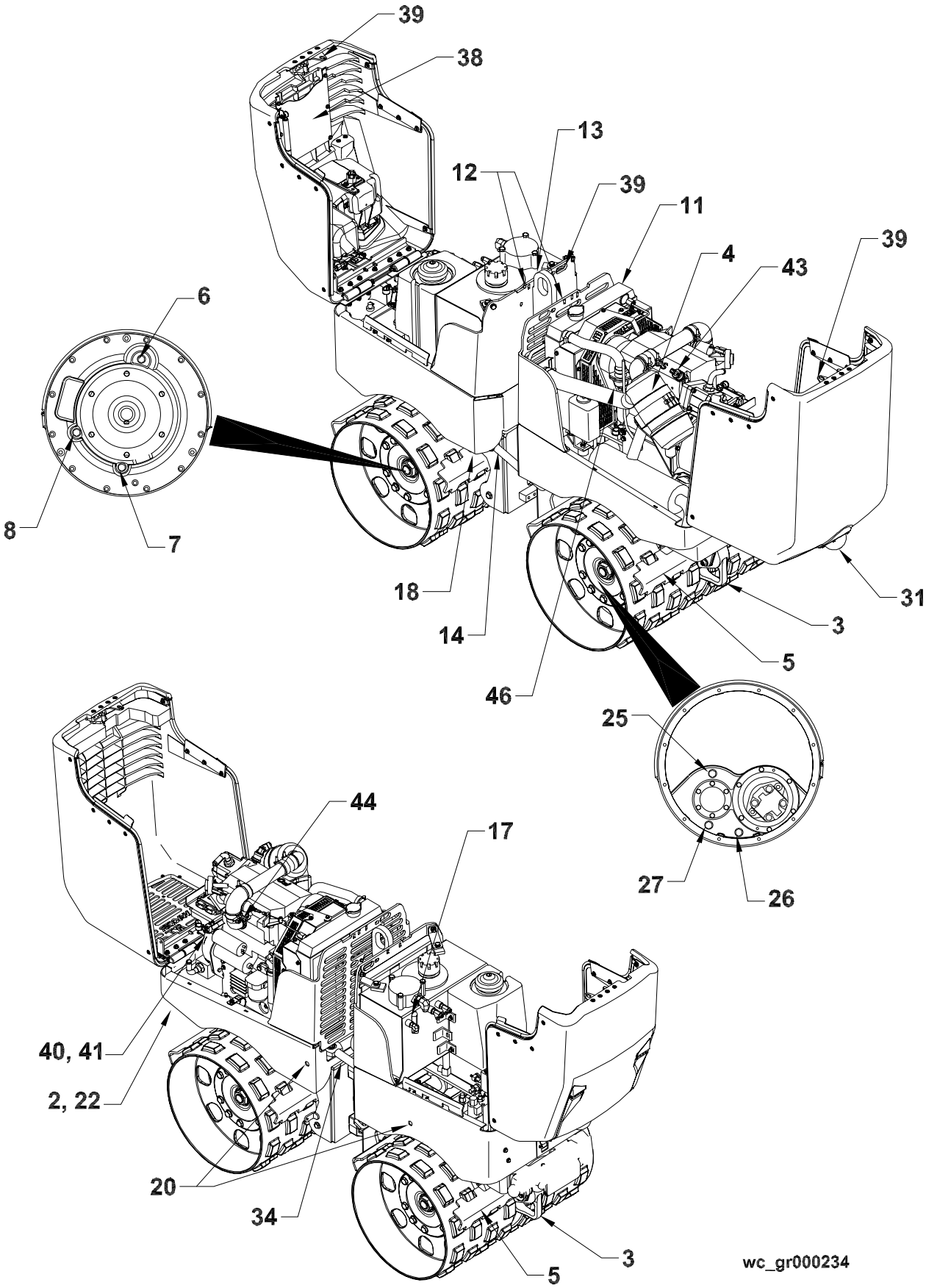
39
38
13
12
39
11
4
43
39
6
8
7
18
14
46
3
31
5
25
27
26
44
17
40, 41
2, 22
20
34
3
5
wc_gr000234

Ref.	Description	Ref.	Description
1	Oil dipstick	25	Exciter fill plug
2	Engine oil drain plug	26	Exciter drain plug
3	Tie-down lugs	27	Exciter oil level plug
4	Air cleaner	28	Display panel
5	Scraper bar	29	SmartControl™ transmitter
6	Drive case fill plug	30	Charge cable
7	Drive case drain plug	31	Receiving eye/light ring
8	Drive case oil level plug	32	Oil cooler
9	Exciter pump	33	Docking port
10	Drive pump	34	Steering cylinder
11	Radiator	35	Decoder module
12	Hood latch	36	Engine control module
13	Lifting eye	37	Latch
14	Articulated joint locking bar	38	Manual holder
15	Hydraulic tank	39	Hood locking tab
16	Hydraulic tank return line filter	40	System fuse - 20A
17	Hydraulic oil level sight gauge	41	Self-resetting circuit breaker - 50A
18	Hydraulic tank drain plug	42	Charge cord / Service box receptacle
19	Articulated joint grease fitting	43	Oil PSI switch
20	Steering cylinder grease fittings	44	Air filter restriction switch
21	Fuel tank	-	---
22	Radiator drain plug	46	High water temperature switch / Glow plug timer
23	Hydraulic manifold	47	Hood hinge grease fitting
24	Battery		

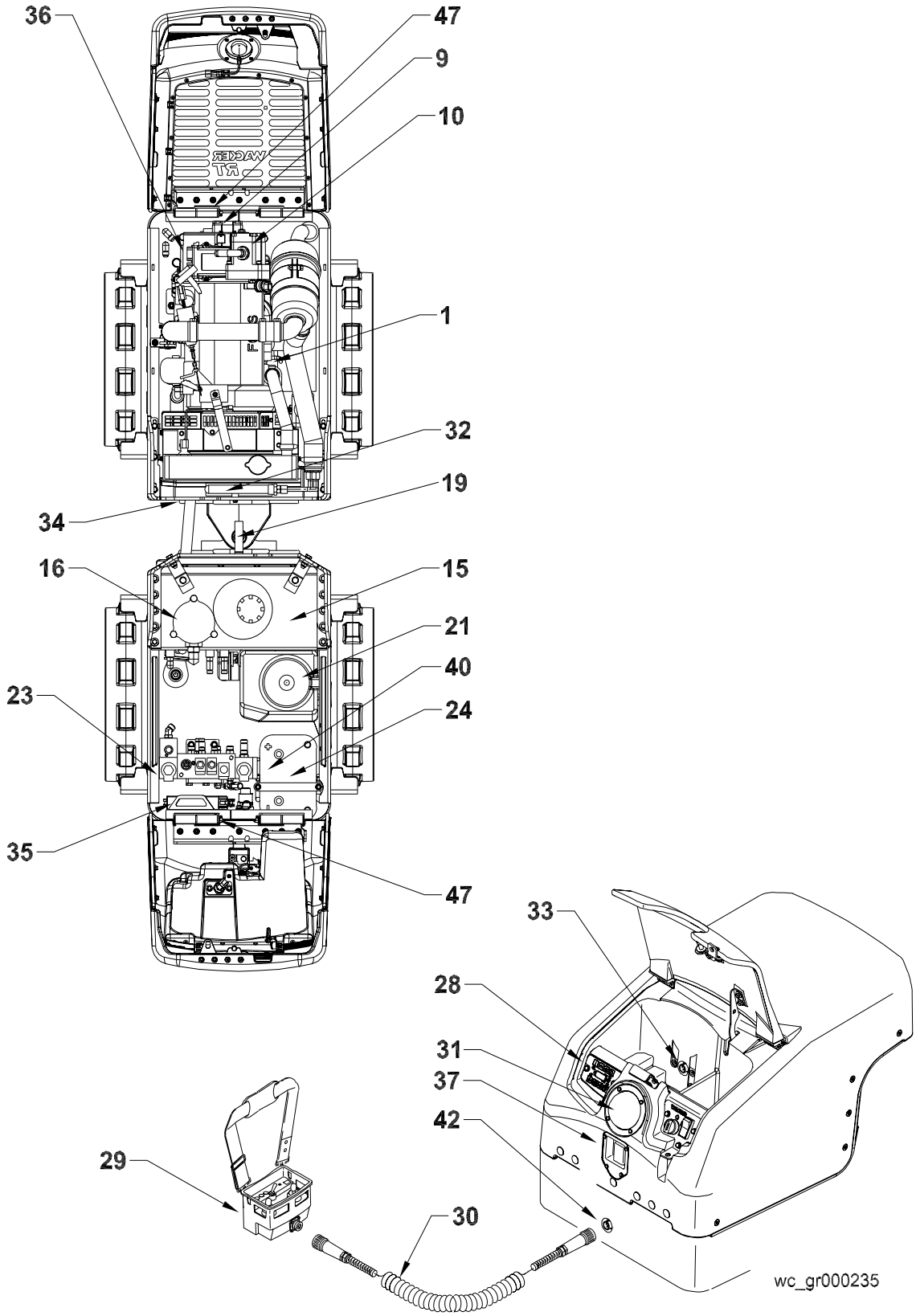
36
47
9
10
1
32
19
34
16
15
21
40
23
24
35
47
33
28
31
37
42
29
30
wc_gr000235

3.3 Control Panel

See Graphic: wc_gr001728

The control panel is mounted to the dash under the back hood access cover of the machine. It contains the following features:

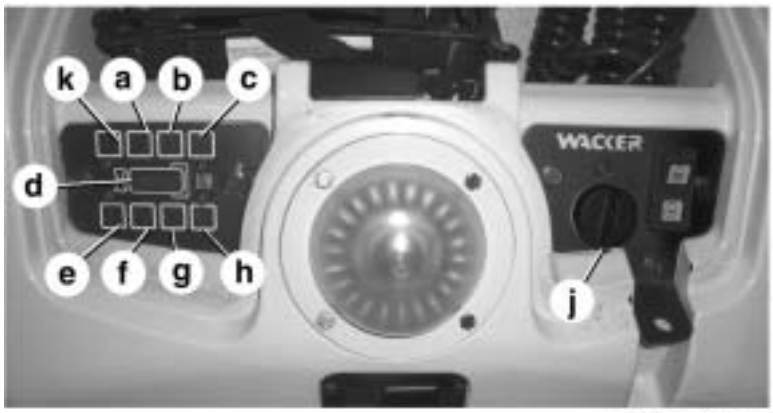

wc_gr001728

3.3.1 Charging System Light (a)

The engine is equipped with an alternator and voltage regulator to maintain the battery charge. The charging system warning light illuminates when there is a malfunction of the system. Although the machine will run with the light on for a short period of time, continued operation will drain the battery and eventually cause the machine to lose all operating functions.

CAUTION

If the system warning light illuminates while operating the machine in a narrow trench or other confined area, drive machine into a safer area as soon as possible to avoid stranding it in a hazardous or inaccessible location.

3.3.2 Glow Plug Light (b)

The engine is equipped with an automatic glow plug system that pre-heats the combustion chambers to improve normal and cold weather starts. The glow plug light illuminates when the keyswitch and the transmitter ON/OFF switch are placed in the **I** (ON) positions. It will go off when the combustion chambers are pre-heated.

Note: *Allow 5 minutes for the engine to warm up before operating the roller.*

3.3.3 Air Cleaner Light (c)

The air cleaner warning light illuminates when the air filter cartridge needs to be replaced.

3.3.4 Hour Meter (d)

The hour meter records the actual running time of the engine. Use the hour meter when planning scheduled maintenance.

3.3.5 Engine Oil Pressure Light (e)

The oil pressure warning light illuminates when oil pressure falls below the engine manufacturer's recommended value. During such a condition, the engine will automatically shut down.

3.3.6 Coolant Temperature Light (f)

The cooling temperature warning light illuminates when engine coolant temperature exceeds 230°F (110°C). During such a condition, the engine will automatically shut down.

Note: *Allow temperature to drop below 212°F/100°C before attempting to restart.*

3.3.7 Coolant Level Light (g)

The cooling level warning light illuminates when coolant level is too low. During such a condition, the engine will automatically shut down.

3.3.8 Stability Light (h)

The stability warning light illuminates when the pitch of the roller exceeds 45°. The machine is equipped with safety switches that shut down the engine during such a condition.

3.3.9 Keyswitch (j)

Turning the keyswitch to the **I** (ON) position supplies power to the machine. The green power-on indicator **(k)** illuminates indicating power is on.

The keyswitch has an automatic shutoff feature that after 1 hour of non-engine run time, the electronics will power off. To reset the machine, turn the keyswitch to the **O** (OFF) position and then back to the **I** (ON) position.

Note: *The machine can be restarted within this 1-hour period if the transmitter is turned off and then on. The glow plugs will be activated if needed.*

All shutdown functions have the feature that when a fault is detected, the warning light and red LED light rings will remain on after the machine shuts down, until the fault is corrected, and the keyswitch is turned to the **O** (OFF) position.

All shutdown functions and the air filter restriction circuit have built-in circuitry to detect a possible bad sensor, unplugged sensor, or a cut or damaged wire to the sensor. Whenever any of these sensor faults occur, the corresponding control panel light will flash on and off.

3.4 SmartControl™ Transmitter

See Graphic: wc_gr001660

- Wireless control
- Line of sight operation
- 3 control channels
- Clear transmissions into direct sunlight, up to 100,000 LUX
- Maximum Range: 14 m (45 ft.)
- Transmitting time: 8 hours
- Recharge time: ≤ 40 minutes
- Batteries: Ni-Cad battery pack

The standard operating controls include:

Ref.	Description	Ref.	Description
a	Cable connector	h	Engine START pushbutton
b	Infra-red emitting diodes	j	ON/OFF toggle switch
c	Joysticks	k	LOW vibration pushbutton
d	Battery charge indicator (green LED)	l	Vibration OFF pushbutton
e	Battery failure indicator (red LED)	m	HIGH vibration pushbutton
f	Power ON indicator (green LED)	n	Signal transmission indicator
g	Charging required indicator (red LED))		

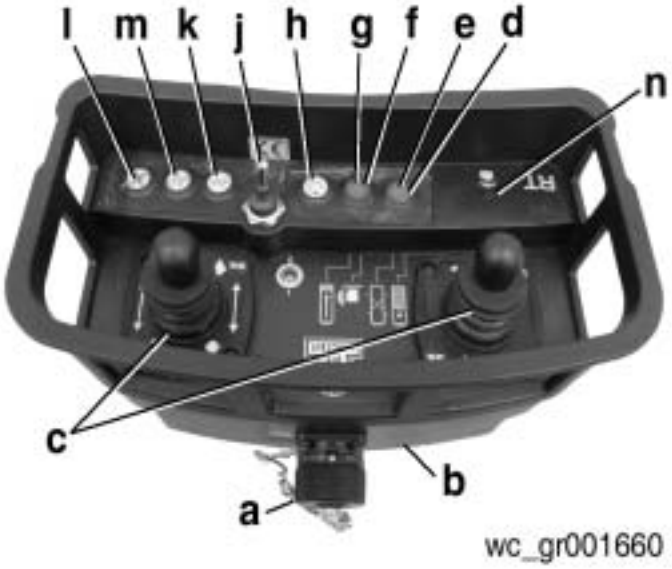

wc_gr001660

3.4.1 Cable connector (a)

The cable connector provides battery charging capabilities. Transmitter batteries can be recharged using the cord while the engine is running, or during non-working hours using the docking port.

3.4.2 Infra-red emitting diodes (b)

The diodes are used to transmit the coded infra-red signal to the receiving eye on the machine. Keep the window in front of the diodes clean to ensure maximum signal strength.

3.4.3 Joysticks (c)

Two joysticks control low- and high-speed directional motion of the roller. The left joystick controls left/right motion. The right joystick controls forward/reverse motion. Move the joysticks in the direction desired. The roller will change to high speed whenever the right joystick is placed fully in the forward or fully in the reverse position.

3.4.4 Battery charge indicator (green LED) (d)

When this light is OFF and transmitter is in use, it indicates that the batteries are charged. If this light is blinking, it indicates that there is no battery present, that there is an internal failure (Temp sensor), or that the battery is too hot. When the light is ON (steady), it means the batteries are being charged through the charging cable or docking port.

3.4.5 Battery failure LED (red) (e)

This LED illuminates when the battery has failed due to discharge, damage, or breakdown.



3.4.6 Power ON indicator (green LED) (f)

When the ON/OFF toggle switch **(j)** is in the **I** (ON) position, this light blinks, indicating that the SmartControl™ transmitter is ON and ready for operation.

3.4.7 Charging required indicator (red LED) (g)

This red LED is used to indicate the capacity of the battery in the SmartControl™ transmitter module. When the battery capacity falls to 20% of full charge, the LED will begin to blink, indicating that the battery needs recharging. At this stage, transmission distance may begin to diminish. If the battery charge falls to 10% or less, the red LED changes from a blinking light to a continuously-on light and transmission is shut off. This avoids possible malfunctions caused by weak signals.

- Light Off: Battery charged
- Light Blinks: Battery charge at 20%
- Light On: Battery at 10%, machine shuts down.

When the control cable is connected to the SmartControl™ transmitter, the battery will automatically charge as needed.

Note: *If the transmitter battery is completely discharged, neither the red LED nor green LED will illuminate.*

3.4.8 Engine START pushbutton (h)

Pushing this button causes the engine to crank. An override prevents the engine from cranking if it is already running.

3.4.9 ON/OFF toggle switch (j)

Placing this switch in the **O** (forward) position causes the roller to stop all motion and the engine to shut down.

Placing this switch in the **I** (backward) position supplies power to the SmartControl™ transmitter. In this position, the Power ON indicator (green LED) **(f)** illuminates.

3.4.10 Low vibration pushbutton (k)

Pressing this button causes the vibration to come on in LOW.

3.4.11 High vibration pushbutton (m)

Pressing this button causes the vibration to come on in HIGH.

3.4.12 Vibration pushbuttons (k or m)

Pressing either vibration pushbutton will cause the roller to drop out of high speed travel; conversely, when vibration is on, the roller cannot go to high speed.

When shifting from one vibration mode to the other, the exciter weights must come to a complete stop and reverse direction. Therefore, a 7-second delay has been built into the control circuit.

3.4.13 No vibration pushbutton (l)

Pressing this button causes all vibration to stop.

3.4.14 Signal transmission indicator (n)

To aid in diagnostics, this LED blinks any time a signal is sent to the roller.

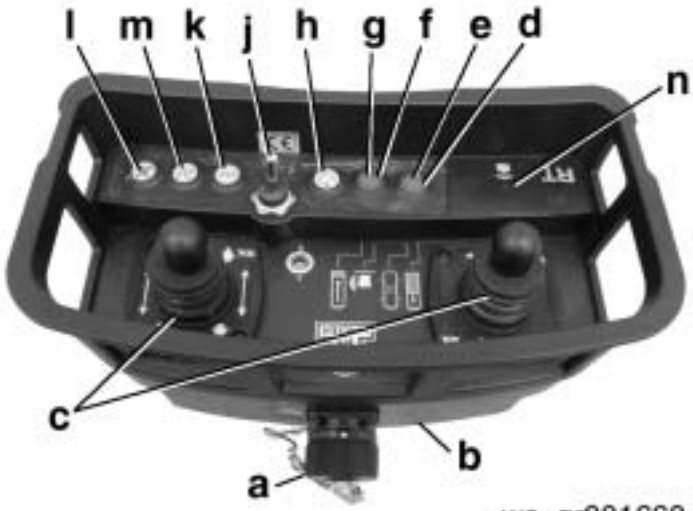

3.5 Infra-red System and Control Channels

See Graphic: wc_gr003061

The infra-red (IR) system consists of three main components: the SmartControl™ transmitter **(a)**, the receiving eyes **(b)**, and the decoder module **(c)**.

The receiving eyes are positioned on the top of the machine enclosed within protective lenses. They receive, filter and amplify the infra-red transmission. They include:

- An integrated pre-amp to strengthen signal input
- IR correction, to filter outside light interference
- A frequency range of 500 kHz

There is a green LED **(d)** on the base (bottom) of each eye. When illuminated, the green LED indicates:

- That electric power is being supplied to the eye. The LED illuminates for the first 1–2 seconds after power has been applied (key switch is turned on).
- That the eye is receiving a signal from the SmartControl™ transmitter module. The LED will remain on during operation.

The decoder module is positioned behind the hydraulic manifold at the back of the machine. It receives, decodes, and outputs the signal from the transmitter module. It is also the electric power supply for all hydraulic solenoids.

The IR system can be set to one of three different control channels. Using different channels allows multiple rollers to operate in the same area without interference. Whenever multiple rollers are operated within 45 feet (14 meters) of one another, make certain each roller and its accompanying transmitter is set to a different control channel than the other rollers/transmitters being used within the area.

Channel selection microswitches **(e_1** and **e_2)** are included on both the transmitter module and on the decoder module. The microswitches come from the factory set randomly. For proper operation, BOTH microswitches must be set to the SAME channel. The channel is determined by the position of the microswitch.

To change the control channel:

3.5.1 Remove the four screws holding the transmitter module together and carefully pull it apart. Place the microswitch on the transmitter module in any of the three positions. Close the box and secure with four screws.

3.5.2 Place the microswitch on the decoder module in the same position as that of the microswitch on the transmitter module.

3.5.3 To determine if the decoder module and the transmitter module are set to the same channel, turn the key switch to the ON position and place the transmitter module's ON/OFF toggle switch in the ON position. The amber lights on the machine's light ring should blink at a slow rate indicating that the machine is receiving signals from the transmitter module. If the amber lights illuminate but do not blink, the transmitter module and the decoder module are not set to the same channel. Try another position until the LEDs do blink.

3.5.4 Once set, label the control channel setting on both the roller and its accompanying transmitter.

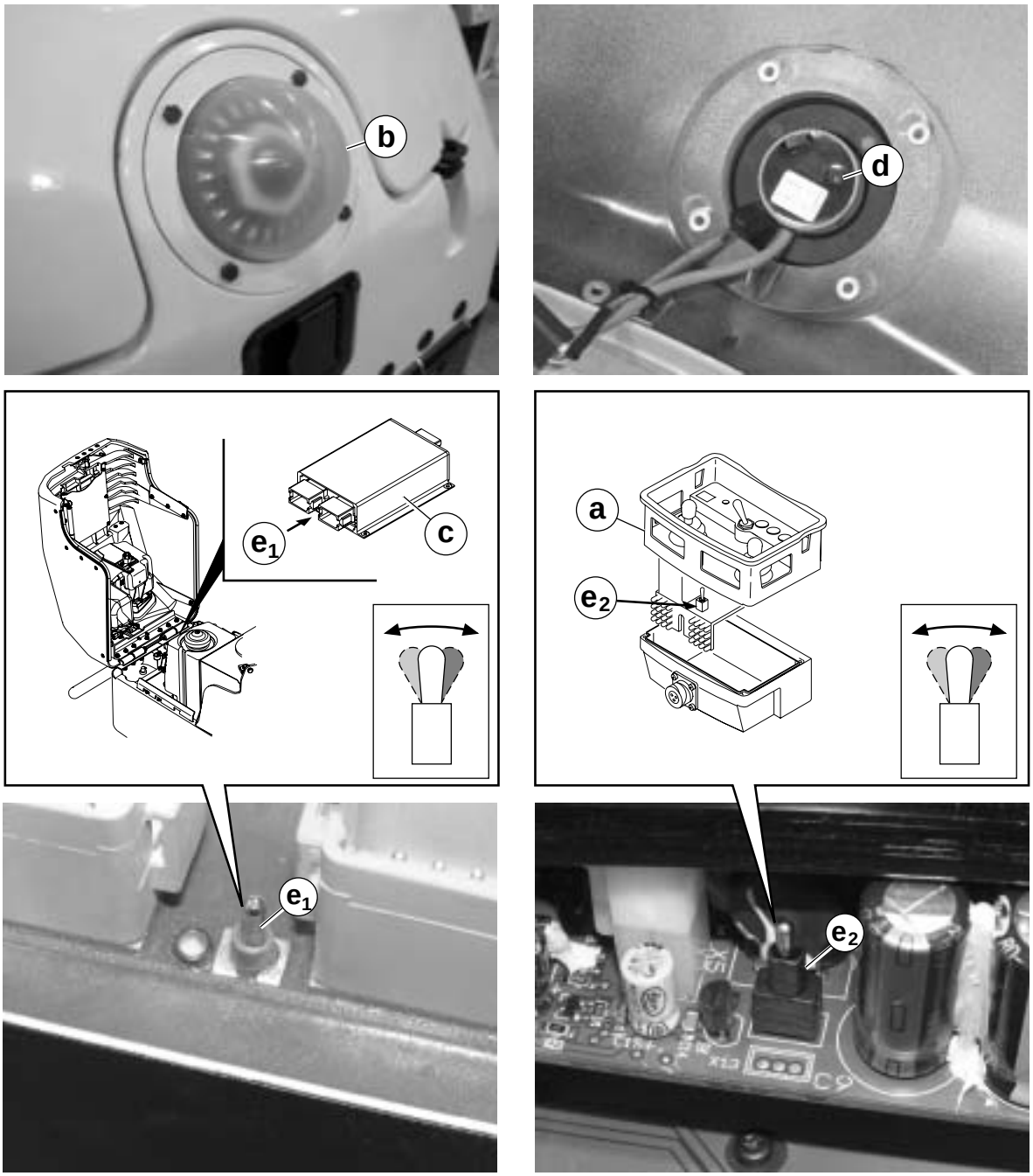

wc_gr003061

3.6 Before Starting

See Graphic: wc_gr0003062

Before starting the machine check the following:

- Engine oil level
- Hydraulic fluid level
- Condition of fuel lines
- Condition of air cleaner
- Fuel level
- Water level
- Scraper bars are clean and properly adjusted
- Check that the SmartControl™ transmitter module and the machine's decoder module are set to the same control channel.

Note: *All fluid levels should be checked with the machine on a level surface.*

Ensure that regular maintenance has been carried out.

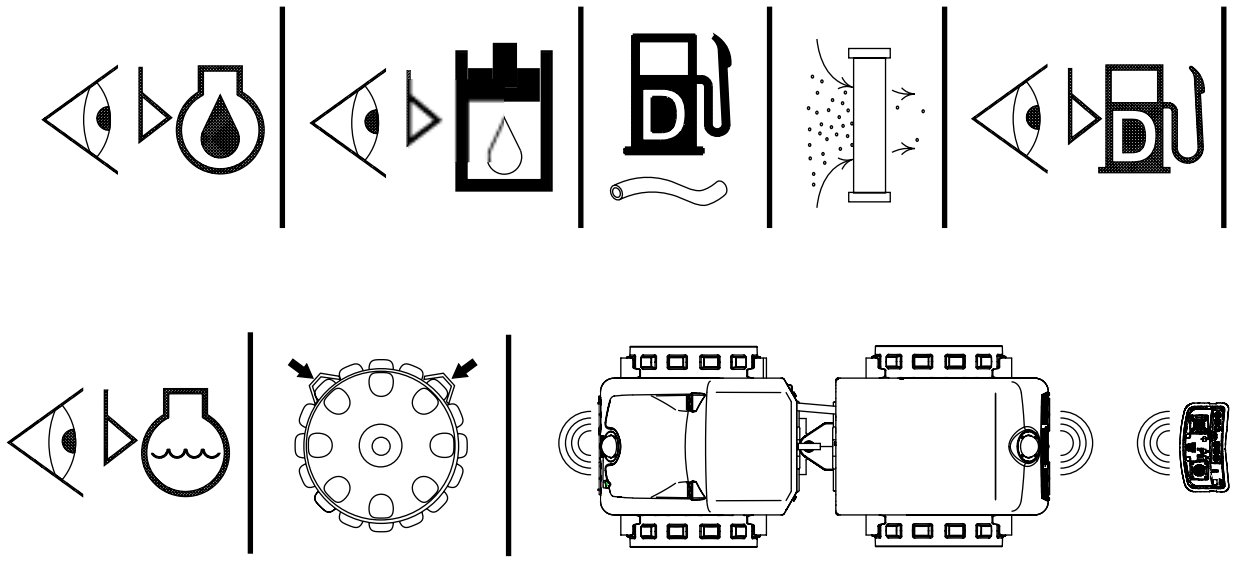

wc_gr003062

3.7 Starting

See Graphic: wc_gr0001662 and wc_gr001727

3.7.1 Place the throttle switch **(b)** in the idle (slow) positon.

3.7.2 Turn the key switch **(a)** to the **I** (ON) position. All lights on the display/ control panel and light ring will illuminate for a 5-second LED test. After 5 seconds, the power ON indicator **(h)**, charge indicator **(i)**, and engine oil pressure indicator **(l)** will remain illuminated. The light ring **(q)** will have a steady amber color.

3.7.3 Place the SmartControl™ transmitter ON/OFF toggle switch **(d)** in the **I** (ON) position. Make sure the amber indicator lights in the light rings **(q)** are flashing at a slow rate. This indicates infra-red reception and that the transmitter is at the correct distance from the machine. If they are not flashing or they are flashing at a fast rate, reposition the SmartControl™ transmitter so that they do flash at a slow and steady rate. If you are operating multiple rollers, check to make certain each roller and its accompanying transmitter are set to a different control channel.

3.7.4 After approximately 2 seconds, if engine conditions dictate (coolant temperature too cool), the glow plug indicator **(j)** will illuminate signifying the glow plugs are on. The colder the engine coolant temperature, the longer the glow plugs and thus, the glow plug indicator **(j)** will stay on; approximately 30 seconds at 0°C (32°F). Do not start the engine until the indicator light goes out.

Note: *A red flashing ring of lights will also come on in the light ring **(q)** to indicate the glow plugs are on.*

3.7.5 Immediately after the glow plug light **(j)** and red LED rings **(q)** go out, press the engine start button **(g)** and hold it down until the engine starts. If the unit fails to start within 20 seconds of cranking, place the ON/OFF toggle switch in the **O** (OFF) position. Wait 30 seconds before going through the start procedure again.

Note: *A 30-second wait time is required so the anti-restart cycle can reset.*

3.7.6 Once started and sufficient oil pressure is sensed, the oil pressure indicator will go out.

3.7.7 Allow the unit to warm up a minimum of 5 minutes before engaging the throttle switch **(b)** to the *high* (fast) position.

3.8 Stopping

See Graphic: wc_gr001662 and wc_gr001727

3.8.1 Using the vibration off pushbutton **(f)**, turn vibration off.

3.8.2 Place the throttle switch **(b)** in the idle (slow) positon.

Note: *The engine cannot be shut down using the throttle control alone. The throttle switch only changes the engine speed from high (fast) to idle (slow).*

3.8.3 Place the transmitter ON/OFF switch **(d)** in the **O** (OFF) position to stop the engine.

3.8.4 Turn the key switch **(a)** to the **O** (OFF) position.

Note: *The key switch has a built-in shutoff timer. If left in the ON position when the engine is not running, after one hour, the timer will shut off the power to the control panel.*

A parking brake is located in the rear drum. The brake is connected to the hydraulic system through the brake valve of the control manifold. The brake is spring activated and hydraulically disengaged. Hydraulic oil flow to the brake is enabled as soon as the engine starts. Thus, when the engine is running, the brake is disengaged; when the engine is not running, the brake is engaged.



wc_gr001662

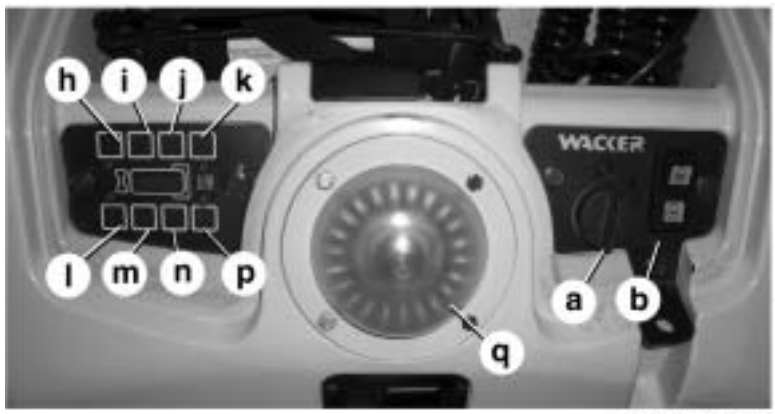

wc_gr001727

3.9 Operation

See Graphic: wc_gr000959

Keep the transmitter pointed at either of the receiving eyes on the machine to continue operation. The light ring amber LEDs will blink to show that the machine is receiving signals from the transmitter.

Note: *Clean transmitter and receiver eyes prior to operation.*

The infra-red system is equipped with an operator distance sensing system. If the operator is standing within 1 m (3.3 ft) of the machine, the amber light ring will flash rapidly. The machine will not travel forward/reverse or vibrate until the operator moves outside this distance. The amber lights will flash slowly to indicate the machine can be operated.

Note: *The control cable is not needed for using the infra-red system.*

The SmartControl™ transmitter battery can be recharged at the end of operation by connecting the transmitter receptacle **(b)** to the battery docking port **(c)**. See *Charging Transmitter Batteries*.

The Cable Control System will only charge the transmitter battery if the control cable is connected to the transmitter receptacle **(b)** and plugged into the port **(a)** in the back of the roller.

CAUTION

Multiple rollers are not to be operated within 45 feet (14 meters) of one another, unless you are certain you have each roller and its accompanying transmitter set to a different control channel than the other rollers/transmitters being used within the area. Refer to section *Setting Control Channels* for additional information. Failure to assign different control channels can, in certain circumstances, cause one transmitter to inadvertently take control of multiple rollers.

WARNING

Always use the SmartControl™ transmitter neck strap provided by Wacker while operating with the control cable connected. This neck strap is designed to break away so that the operator will not be dragged by the machine should the machine slide, tip, or fall.

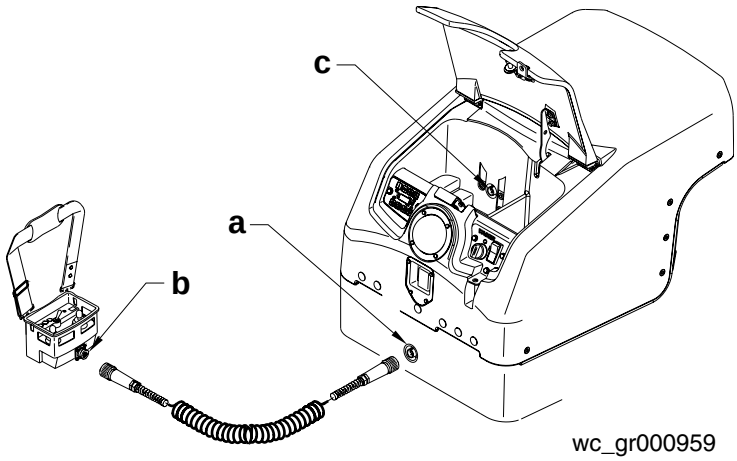

wc_gr000959

4. Maintenance

4.1 Transporting Machine

See Graphic: wc_gr000980

When transporting the machine, place blocks in front of and behind each drum and use the tie down lugs **(a)** provided to securely fasten the machine to the trailer.

Make sure that the joint locking bar **(b)** is engaged.

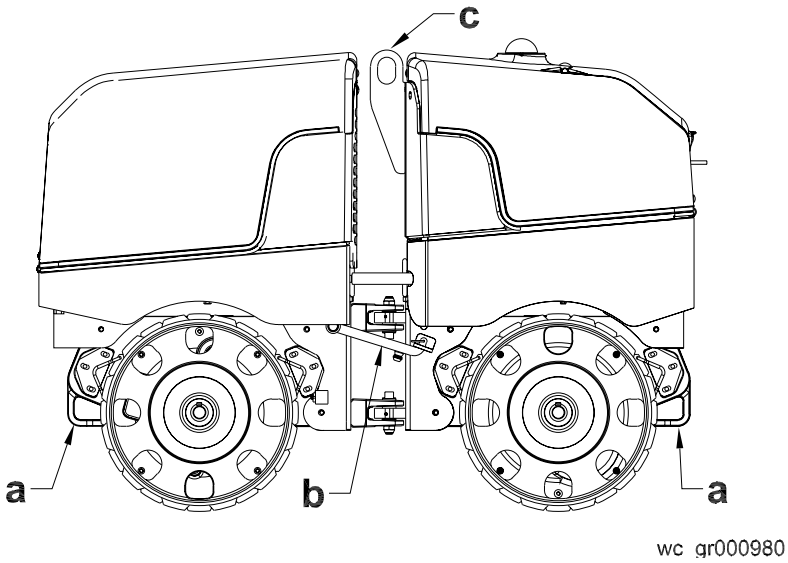

4.2 Lifting Machine

See Graphic: wc_gr000980

Lock front and rear machine halves together using the joint locking bar **(b)** at the articulated steering joint on the machine. Use a lifting device with sufficient weight-bearing capacity. Lift machine from lifting eye **(c)**.

ALWAYS lock the articulated steering joint before lifting the machine.

4.3 Job Site Storage

See Graphic: wc_gr000983

Never allow the roller to sit overnight in a ditch, trench or other low-lying area which might fill with water during a heavy rain. Park the roller on a flat level surface, out of the way of traffic patterns and congestion. If the roller must be parked on an incline, chock the drums to prevent any chance of movement.

If leaving the roller on the job site, remember to remove the key and lock the control panel cover and engine hood to prevent tampering. Both the front and rear hoods and access cover are equipped with a locking ring **(a)** for use with a padlock for this purpose.

If desired, the SmartControl™ can be removed from the roller and stored separately.

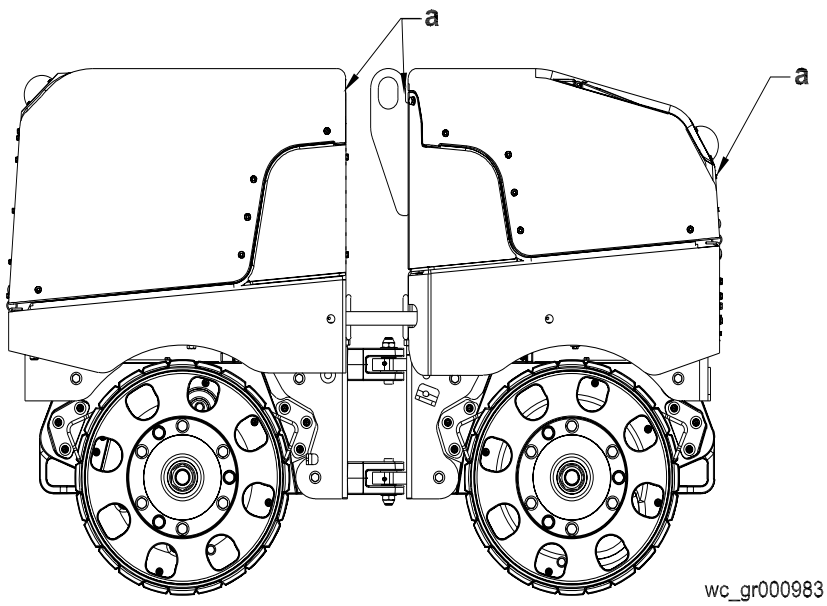

4.4 Storage

If storing unit longer than 30 days, the following steps are recommended:

4.4.1 Change the engine oil.

4.4.2 Clean or change air cleaner elements.

4.4.3 Drain any water that may have collected at the bottom of the fuel tank. Replace the fuel filter. Refill the tank with fresh No. 2 diesel fuel.

Note: *Diesel fuel is subject to bacterial growth which can contaminate fuel lines. Allowing the tank to sit dry for a long period of time helps promote such growth. The addition of a biocide to the fuel is recommended to inhibit bacterial growth and protect the engine fuel system.*

4.4.4 Store the unit indoors in a clean dry area. If the unit must be stored outdoors, cover it.

4.5 New Machines

Perform initial oil and filter changes as listed below. Follow *Periodic Maintenance Schedules* thereafter.

4.5.1 Change engine oil and replace oil filter after first 50 hours.

4.5.2 Replace hydraulic return line filter after first month or 100 hours.

4.6 Periodic Maintenance Schedules

Roller	Daily before starting	Every 100 hrs.	Every 500 hrs.	Once A Year	Every 2 Years
Check hydraulic oil. Fill to correct level.	•				
Clean control box / transmitter.	•				
Grease articulated joint.		•			
Grease steering cylinder.		•			
Grease hood hinges.		•			
Change oil in drive gearcase.			•		
Change hydraulic system return line filter.				•	
Change hydraulic fluid.				•	
Change exciter oil.					•

The chart below lists basic engine maintenance. Refer to the engine manufacturer's Operation Manual for additional information on engine maintenance.

Lombardini Engine	Daily before starting	Every 100 hrs.	Every 125 hrs.	Every 250 hrs.	Every 300 hrs.	Every 500 hrs.
Check engine oil. Fill to correct level.	•					
Replace air filter if indicator light is on.	•					
Check condition and tension on fan belt.	•					
Clean engine head and cylinder fins.		•				
Change oil in engine crankcase.			•			
Replace engine oil filter.				•		
Check and adjust fan belt.				•		
Replace fuel filter cartridge.				•		
Clean injectors and check injector pressure.					•	
Replace fan belt.						•
Check valve clearance.						•

4.7 Hydraulic Oil Requirements

Wacker recommends the use of a good petroleum-based, anti-wear hydraulic oil in the hydraulic system of this equipment. Good anti-wear hydraulic oils contain special additives to reduce oxidation, prevent foaming, and provide for good water separation.

When selecting hydraulic oil for your machine, be sure to specify anti-wear properties. Most hydraulic oil suppliers will provide assistance in finding the correct hydraulic oil for your machine.

Avoid mixing different brands and grades of hydraulic oils.

Most hydraulic oils are available in different viscosities.

The SAE number for an oil is used strictly to identify viscosity—it **does not** indicate the type of oil (engine, hydraulic, gear, etc.).

When selecting a hydraulic oil be sure it matches the specified SAE viscosity rating and is intended to be used as a hydraulic oil. See *Technical Data—Lubrication.*

4.8 Hydraulic Oil Level

See Graphic: wc_gr000979

A hydraulic oil level sight gauge **(c)** is located on the hydraulic tank inside the rear section of the machine.

Check that the oil level is within 25 mm (one inch) of the top of the sight gauge. Add oil as required through the filter housing on top of hydraulic tank.

If hydraulic oil continually needs to be added, inspect hoses and connections for possible leaks. Repair hydraulic leaks immediately to prevent damage to hydraulic components.

4.9 Changing Hydraulic Oil & Filter

See Graphic: wc_gr000979

Note: *In the interests of environmental protection, place plastic sheeting and a container under the machine to collect the liquid which drains off. Dispose of this liquid properly.*

To change hydraulic oil:

4.9.1 Remove drain plug from bottom of frame and allow hydraulic fluid to drain.

4.9.2 Clean filter housing cover. Remove cover from the filter housing and remove the filter element **(a)**.

CAUTION Be extremely careful to avoid dropping anything into the filter housing while cover is off.

4.9.3 Install drain plug.

4.9.4 Fill hydraulic tank through filter housing **(b)** using clean hydraulic fluid.

4.9.5 Install new filter element **(a)** as shown in illustration. Replace housing cover.

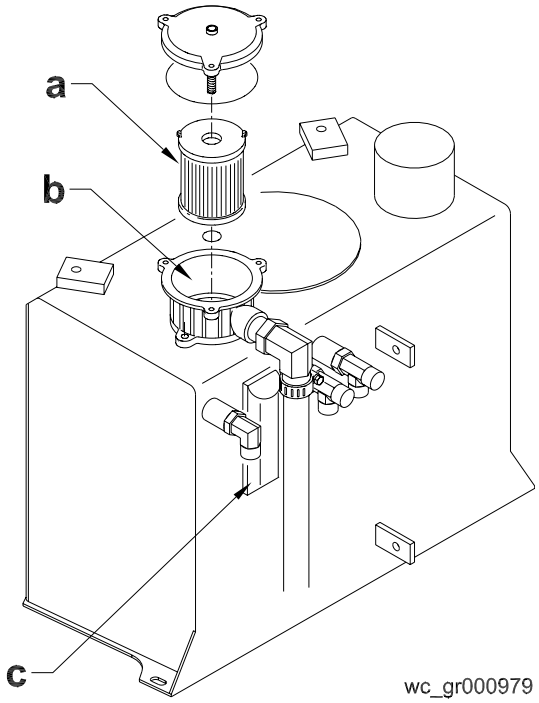

4.10 Articulated Joint, Steering Cylinder, and Hood Hinges

See Graphic: wc_gr001665

Lubricate top and bottom bearing blocks **(a)**, cylinder knuckles **(b),** and hood hinges **(d)** every 100 hours using a hand-held grease gun. Cylinder knuckles can be accessed through holes on side of machine **(c)**.

Use Shell Alvania No. 2 or an equivalent No. 2 general purpose grease.

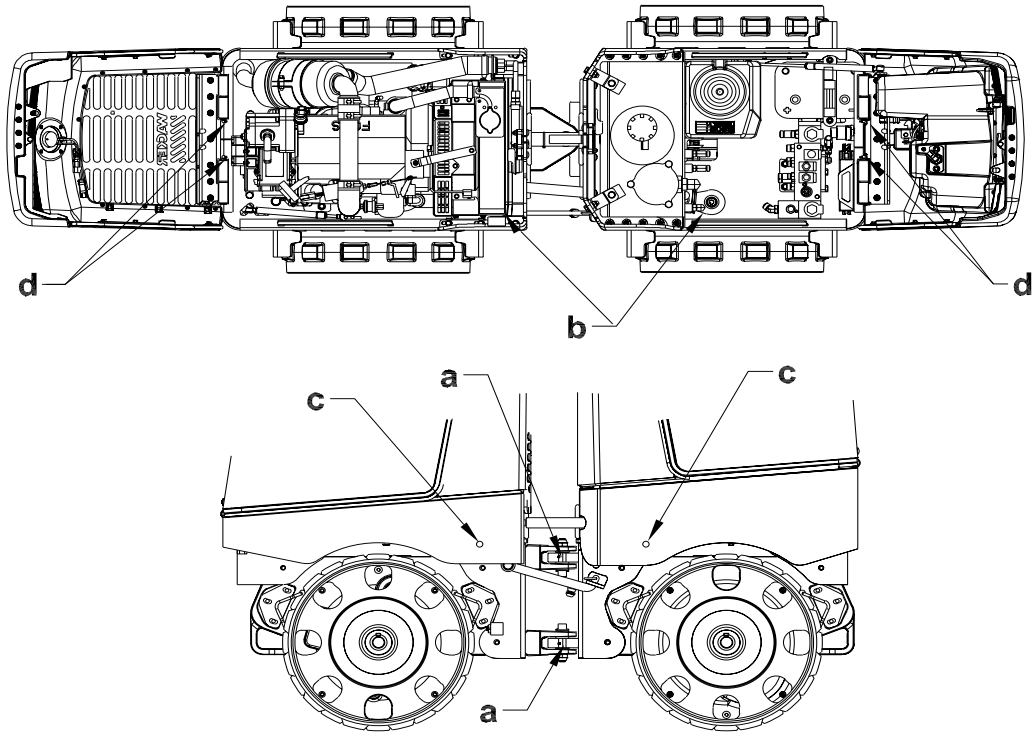

wc_gr001665

4.11 Cleaning SmartControl™ Transmitter

The transmitter and switches are completely sealed to keep dust and moisture out; however, contact with water should be kept to a minimum. Even a small amount of moisture can cause connections and contacts to corrode. Avoid immersing transmitter in water and do not clean using a pressure wash.

To clean the transmitter:

4.11.1 Wash off the transmitter using a damp cloth. Allow it to air dry.

4.11.2 To remove dirt and dust trapped around switches, use low-pressure compressed air.

4.12 Drive Gearcase

See Graphic: wc_gr000479

CAUTION

Any disassembly of the drive gearcase should be done on the opposite side of machine from that shown in graphic wc_gr000479.

Change the oil in the drive gearcase once a year or every 500 hours of operation.

Note: *In the interests of environmental protection, place plastic sheeting and a container under the machine to collect the liquid which drains off. Dispose of this liquid properly.*

To change the oil:

4.12.1 Remove drum from drivecase side of machine. On the front drum this will be on the left side, on the rear drum it is the right side.

4.12.2 Open fill plug **(c)** for venting and then remove drain plug **(b)** from bottom of drum assembly.

4.12.3 Install drain plug and remove level plug **(a)** from gearcase.

4.12.4 Add SAE 10W30 oil through fill plug opening until oil flows out of level plug opening, approximately 12.5 oz. (370 ml).

4.12.5 Replace plugs and install drum.

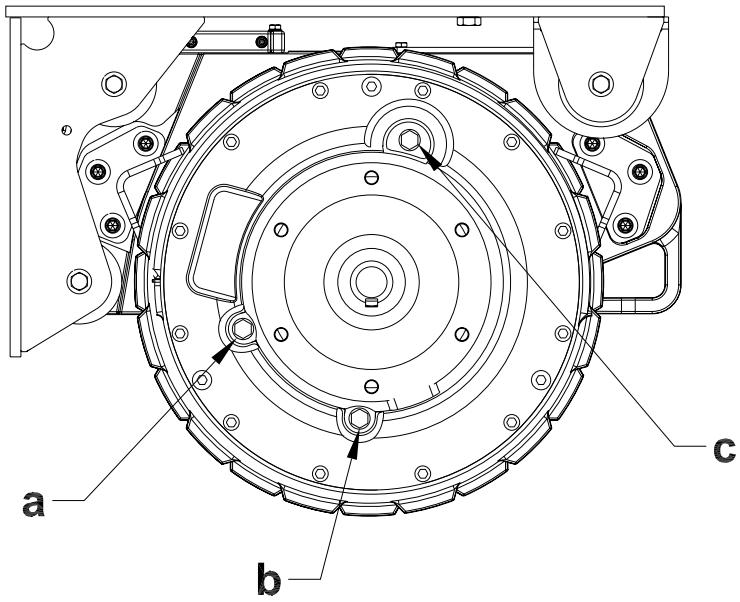

wc_gr000479

4.13 Exciter Lubrication

See Graphic: wc_gr000975

The exciter is a sealed unit and under normal conditions should not require any periodic maintenance; however, an oil change once every two years is recommended to ensure bearing life.

CAUTION

Exciter maintenance should be done on the right front drum and left rear drum only.

Changing the exciter oil requires special tools and should be performed by an experienced mechanic.

Ref.	Note
a	Oil fill plug
b	Oil drain plug
c	Oil level plug (Maintain oil at this level.)

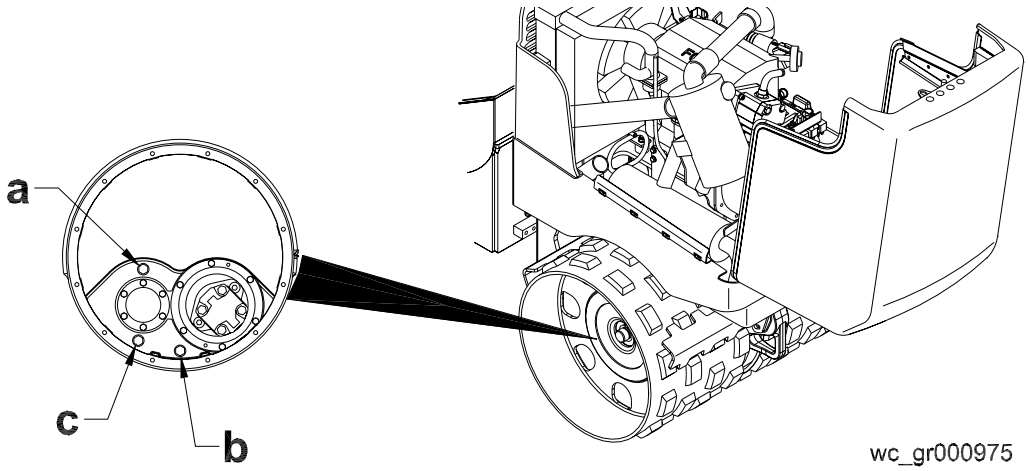

4.14 Scrapers

See Graphic: wc_gr000976

Scraper bars are provided on all four drums to prevent dirt from building up on the drum surfaces. These scrapers should be inspected and adjusted as required to remove as much dirt from the drums as possible.

To adjust a scraper:

Loosen the three screws **(a)** holding each scraper to the drum casting. Position the scraper 1/8–1/4" (3–6 mm) from the drum. Tighten screws and run machine to check that the scraper does not rub against the drum surface.

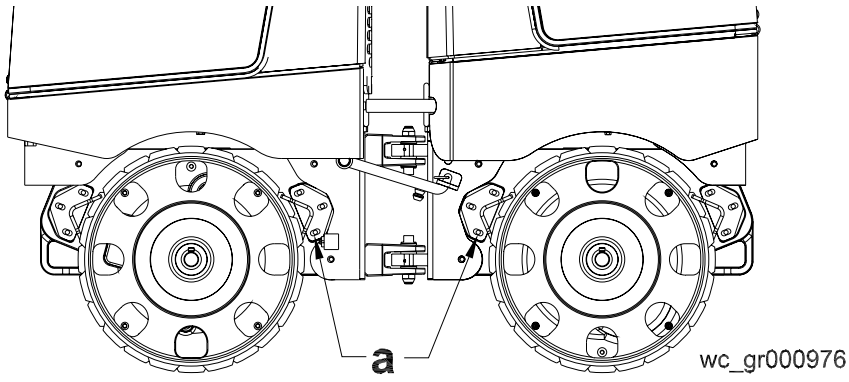

4.15 Shockmounts

See Graphic: wc_gr000978

Inspect the drum shockmounts **(a)** every 300 hours for cracking, splitting or tearing. Replace shockmounts as needed.

CAUTION: The shockmounts isolate the upper part of the machine from the heavy vibrations produced in the drums. Operating the machine with damaged shockmounts for an extended period of time may eventually damage other machine parts.

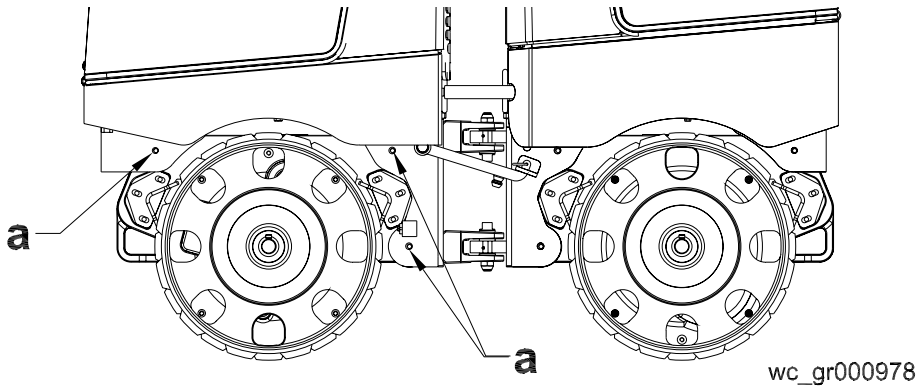

4.16 Changing Drums

See Graphic: wc_gr000981

The drums can be changed to adjust the working width of the machine. Drums are available in two standard sizes that provide a working width of 560 mm (22 in.) or 820 mm (32 in.).

To change drum:

4.16.1 Lock the articulated joint.

4.16.2 Remove scraper bars.

4.16.3 Use a screw jack, hoist or other type of lifting device to lift drums 25–50 mm (1–2 inches) off the ground. Lift only one end of the machine. Keep the other end in contact with the ground for stability.

4.16.4 Use a 22 mm wrench and remove the six screws which hold the drum to the drum support.

4.16.5 Remove the three plugs **(a)** covering the pusher holes.

4.16.6 Insert three of the mounting screws into the pusher holes and thread them in evenly to push drum off.

4.16.7 Install new drum and fasten to support. Secure mounting screws with a medium-strength threadlocking adhesive.

4.16.8 Replace pusher hole plugs. Install the correct size scraper bars.

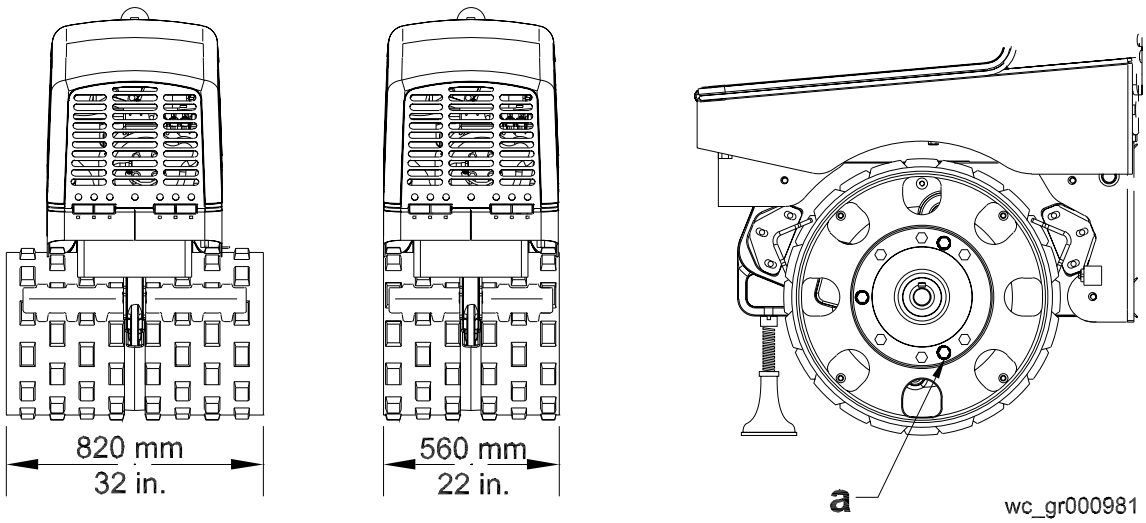

4.17 Battery

The battery supplied on this machine is rated at 12V with 800 Amp cold cranking capacity. It features a sealed, ventless design, and is constructed to resist vibration and provide longer service life.


CAUTION

DO NOT use automotive-type batteries on this machine. Automotive-type batteries are not designed to withstand the heavy vibration produced by this machine. The case on automotive-type batteries could fail, causing battery acid to leak.

Inspect battery periodically. Keep battery terminals clean and connections tight.

Maintain the battery at full charge to improve cold weather starting.

CAUTION: Observe the following to prevent serious damage to the machine's electrical system:

- Never disconnect the battery with the machine running.
- Never attempt to run the machine without a battery.
- Never attempt to jump-start a machine.
- In the event that the machine has a dead battery, either replace the battery with a fully charged battery or charge the battery using an appropriate battery charger.


WARNING

Explosion hazard. Batteries can emit explosive hydrogen gas. Keep all sparks and flames away from the battery. Do not short-circuit battery posts. Do not touch the machine frame or the negative terminal of the battery when working on the positive terminal.

4.18 Engine Oil System

See Graphic: wc_gr000971

Check the engine oil level daily. Add oil as required.

To check oil:

Place the machine on a level surface, remove the dipstick and check that the oil level is at the top mark. Add oil through the oil filler cap **(a)** on top of engine, checking occasionally with dipstick; DO NOT overfill.

Suggested oil grades:

Use only diesel engine oil API service rating CD or equivalent.

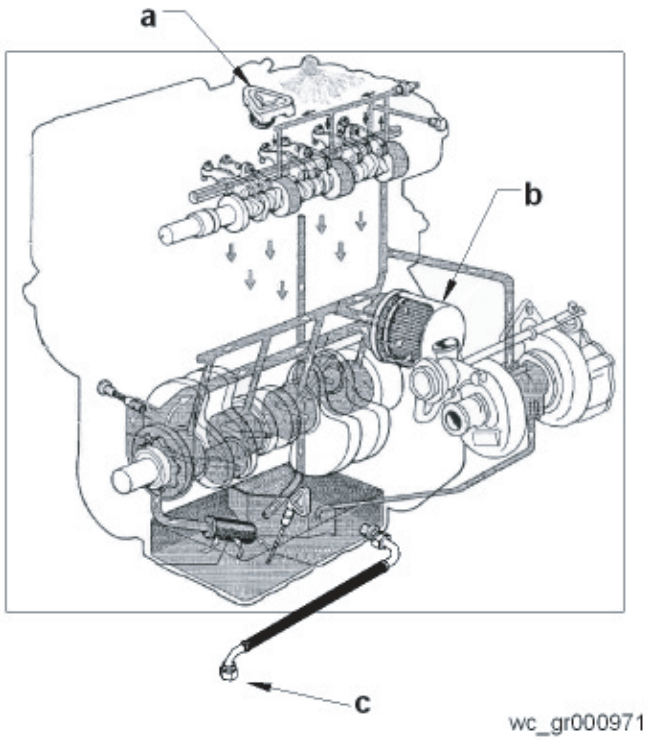

wc_gr000971

4.19 Engine Oil and Filter

See Graphic: wc_gr000971

Change oil and oil filter **(b)** every 125 hours. On new machines, change oil after first 50 hours of operation. Drain oil while engine is still warm.

Note: *In the interests of environmental protection, place plastic sheeting and a container under the machine to collect the liquid which drains off. Dispose of this liquid properly.*

To change oil:

4.19.1 Remove oil filler cap **(a)** and oil drain plug **(c).** Drain oil into a suitable container.

4.19.2 Reinstall the drain plug and tighten.

4.19.3 Remove and replace oil filter **(b)**.

4.19.4 Remove oil filler cap **(a)** and fill engine crankcase with recommended oil. See *Technical Data* for oil quantity and type.

4.19.5 Install oil filler cap.

4.20 Air Cleaner

See Graphic: wc_gr000968

Replace the air filter cartridge when the air filter warning light illuminates. See Section *Control Panel Features*.

The air cleaner assembly contains a one-piece single element air filter cartridge **(a)**.

To replace the air filter cartridge:

4.20.1 Remove the end cover **(b)**, then discard the entire air filter cartridge.

4.20.2 Insert a new air filter cartridge, then:

4.20.3 Re-install the end cover, making sure that the dust cap **(c)** is clean and is pointing downward.

Periodically, make sure the inlet pipe **(d)** is free from obstructions.

CAUTION

Check all connections and make sure they are snug. An air leak at the neck clamp or intake pipe can quickly lead to expensive engine repairs.

- Make sure that the intake piping **(e)** is fully engaged over the neck of the filter to ensure a good seal.
- If the filter housing, neck, or inlet pipe are crushed or damaged, replace them immediately.

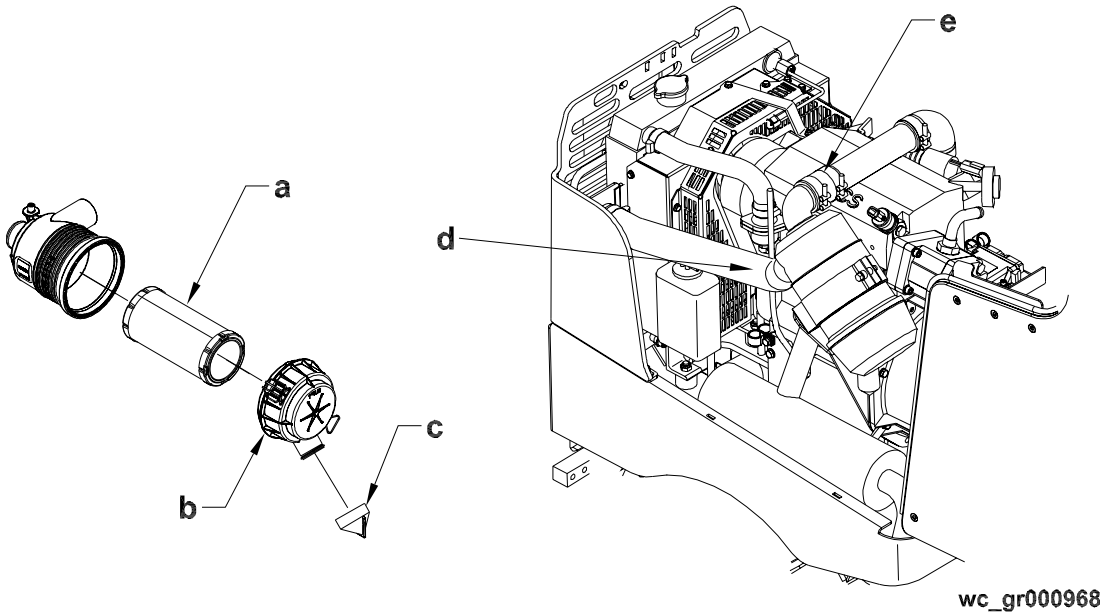

4.21 Engine Fuel Delivery System Maintenance

Maintenance to the engine fuel delivery system should be performed by an experienced mechanic familiar with diesel engines. For detailed maintenance procedures on the engine fuel system, refer to the engine manual supplied with the machine at the time of shipment.

4.22 Fuel Filter

See Graphic: wc_gr000973

Change engine fuel filter every 300 hours of operation.

To change fuel filter:

4.22.1 Remove filter **(a)** from engine block.

4.22.2 Install new filter. If necessary, prime fuel lines as described in next section.

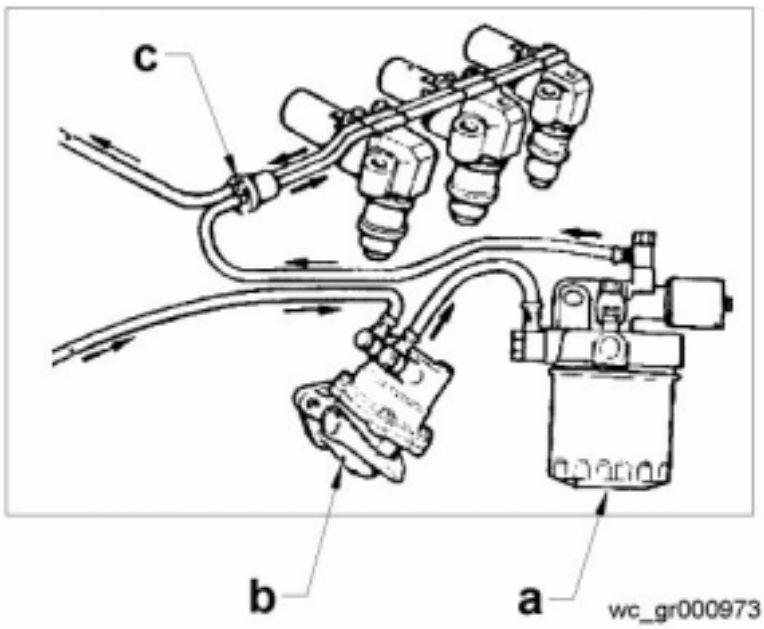

4.23 Priming the Fuel System

See Graphic: wc_gr000973

If the fuel tank has been run completely dry or drained for service, it will be necessary to manually prime the fuel system.

To prime the fuel system:

4.23.1 Turn both the key switch on the machine, and the on-off switch on control box, on. This will open the fuel valve.

4.23.2 Loosen the bleed screw on the fuel filter and pump the lever on the fuel pump **(b)** until fuel flows freely from the bleed screw. Tighten the bleed screw.

4.23.3 Repeat this procedure for the fuel line bleed screw **(c)**.

4.24 Engine Coolant

Check the coolant level of the radiator daily while the engine is cold The coolant level should be at the cold level mark (lower line) on the overflow bottle. Add coolant in a 50% water/50% glycol mixture if required.



WARNING

NEVER remove the radiator cap or drain plug while the engine is hot! Pressurized coolant can cause serious burns.

If it is necessary to open the radiator, only do so with the engine off, and only when coolant is cool enough to touch with bare hands. Slowly loosen cap to relieve pressure first, before removing it completely.

4.25 Valve Clearances

See Graphic: wc_gr002366

Check and adjust valve clearance every 500 hours. Set clearance with engine cold. Replace the valve/rocker arm cover gasket when checking the valve clearances. Refer to the engine manufacturer's service manual for detailed information.

To adjust valve clearances:

4.25.1 Remove valve/rocker arm cover

4.25.2 Bring each cylinder piston to top dead center on the compression stroke and set clearance.

4.25.3 Valve clearance **(A)**: 0.20mm (0.008 in.).

Valve clearance **(B):** 0.15mm (0.006 in.).

4.25.4 Clean gasket material from cylinder head.

4.25.5 Place a small bead of RTV Silicone on cylinder head to secure ends of new gasket. Gently place gasket on cylinder head.

4.25.6 Replace valve/rocker arm cover. Torque bolts to 9 Nm (7 ft.lbs.).

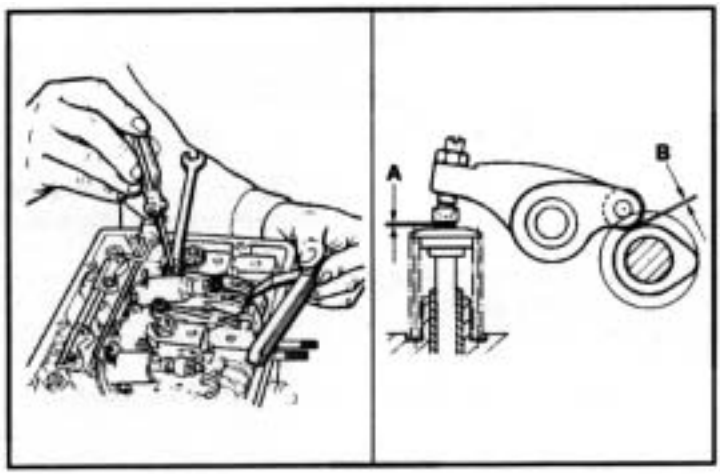

wc_gr002366

4.26 Adjusting Engine Fan Belt

See Graphic: wc_gr002377

4.26.1 Remove the hydraulic oil cooler. See Section *Replacing Hydraulic Oil Cooler.*

4.26.2 Remove radiator and shroud. See Section *Replacing Radiator and Shroud.*

4.26.3 Remove the four screws **(a)** securing the fan to the engine and remove the fan.

4.26.4 Remove the outer pulley plate **(b)**.

4.26.5 Insert the appropriate amount of shims **(c)** to give you the required tension on the belt. The fewer the number of shims, the tighter the belt will be. Approximately 6–12 mm (1/4–1/2 in.) deflection is recommended.

4.26.6 Place unused shims between outer pulley plate and fan when reinstalling the fan. Secure the fan to the engine with the four screws **(a)**.

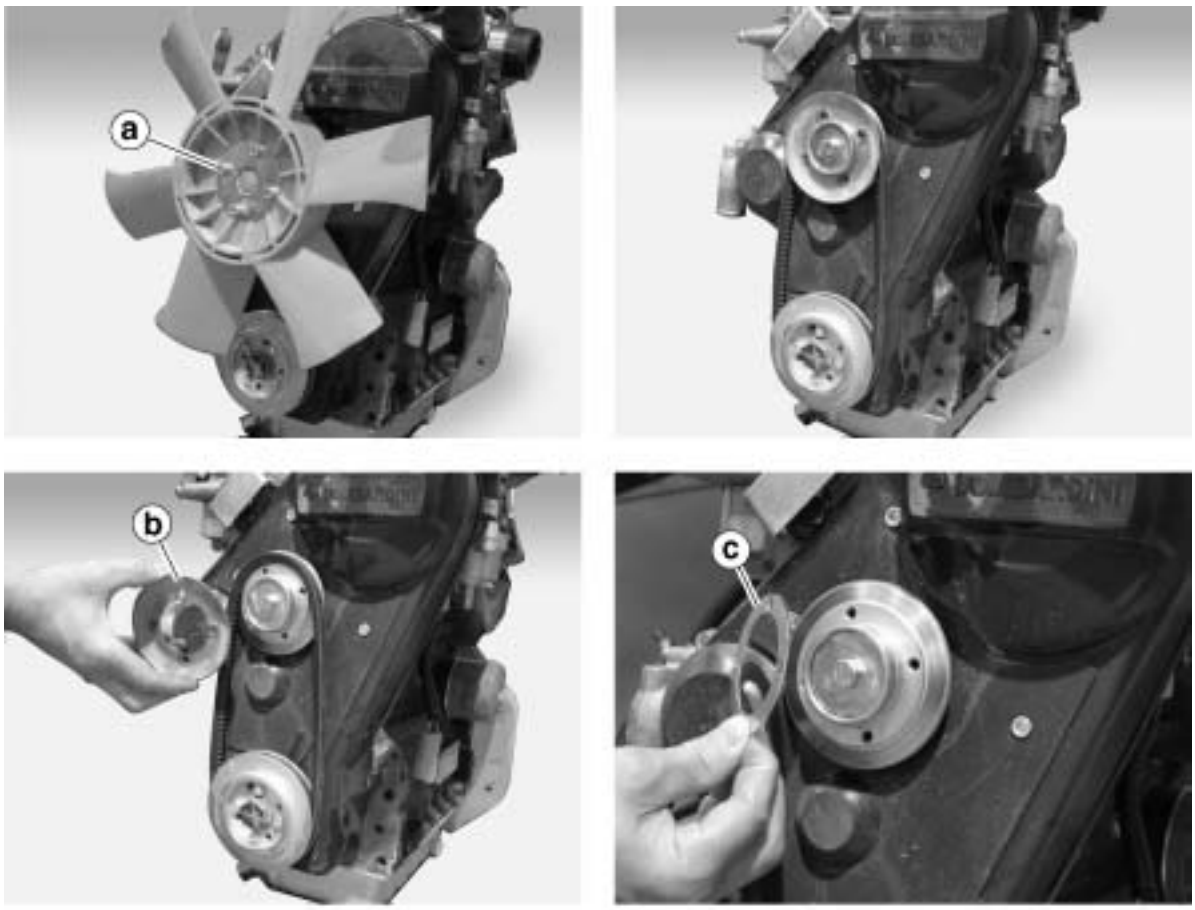

wc_gr002377

4.27 Wiring Schematic

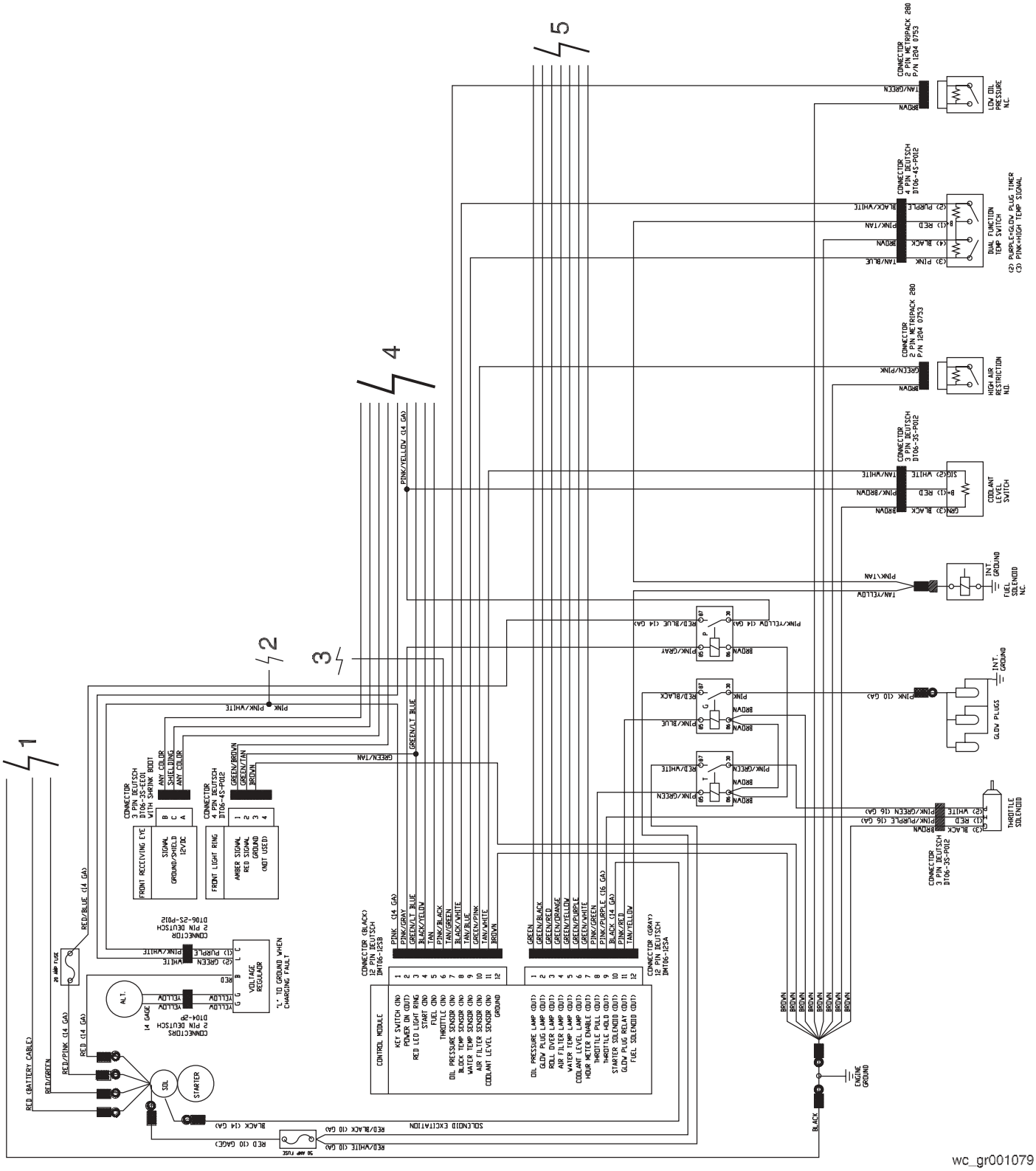

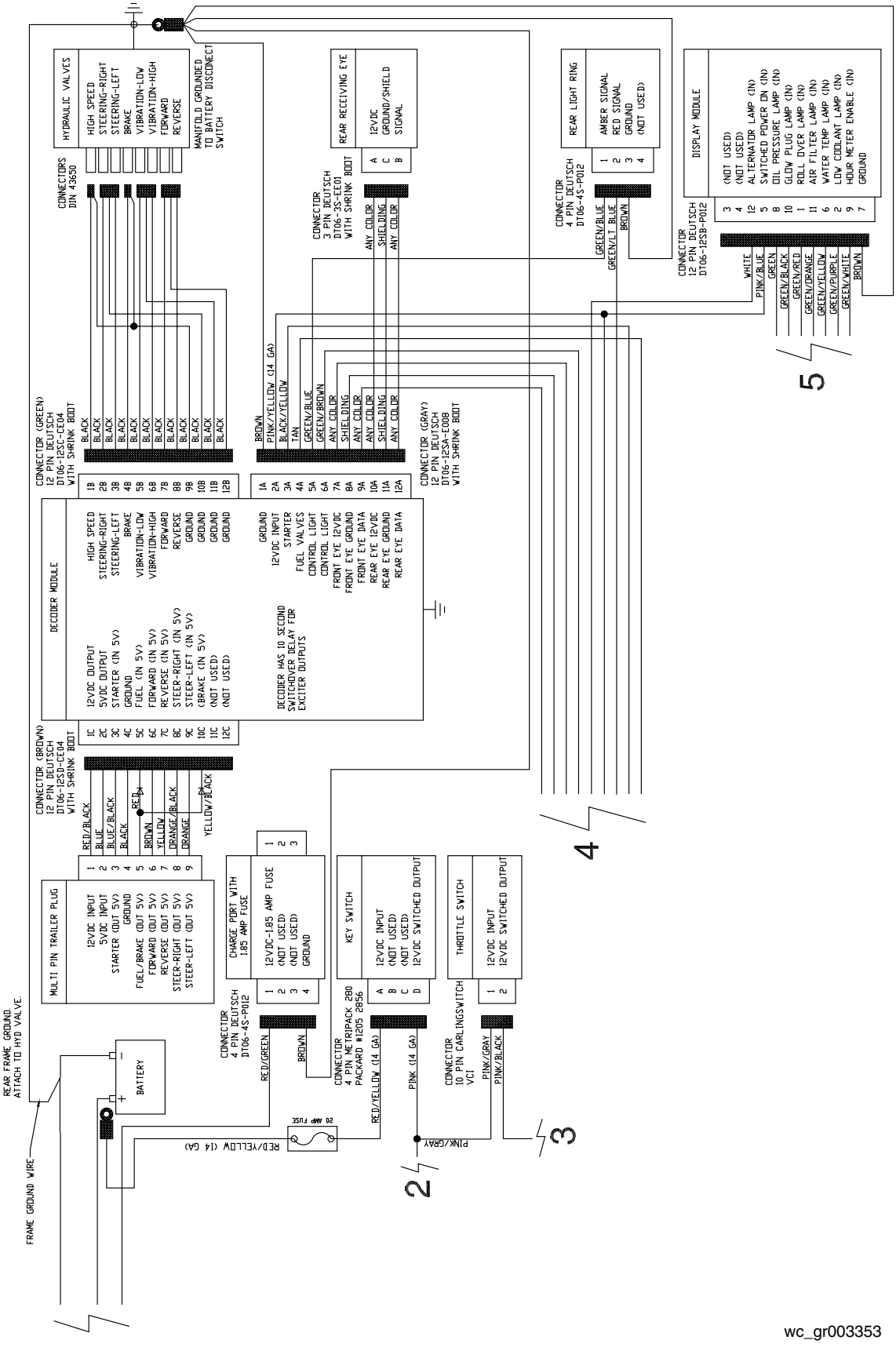
DECODER MODULE
MULTI PIN TRAILER PLUG
CHARGE PORT WITH 185 AMP FUSE
KEY SWITCH
THROTTLE SWITCH
HYDRAULIC VALVES
MANIFOLD GROUNDED TO BATTERY DISCONNECT SWITCH
REAR LIGHT RING
REAR RECEIVING EYE
DISPLAY MODULE
BATTERY
REAR FRAME GROUND. ATTACH TO HYD VALVE.
FRAME GROUND WIRE
20 AMP FUSE
wc_gr003353

4.28 Basic Troubleshooting

Problem / Symptom	Reason / Remedy
ENGINE DOES NOT START	• Fuel tank empty. Fill with No. 2 diesel fuel and prime fuel lines. • Wrong type of fuel. • Old fuel. Drain tank, change fuel filter and fill with fresh fuel. • Fuel system not primed. • Fuel filter restricted or plugged. Replace filter. • Battery connections loose or corroded. Battery dead. • Engine oil level too low. • Air cleaner element plugged. • Starter motor defective. • Starter button on control box or transmitter defective. • Fuel valve solenoids on engine inoperative. • Starter relay inoperative. • Electrical connections loose or broken. • Machine out of infrared signal range.
ENGINE STOPS BY ITSELF	• Fuel tank empty. • Fuel filter plugged. • Fuel lines broken or loose. • Machine out of infra-red range.
NO VIBRATION	• Machine in high speed travel mode. • Defective switch or poor connection in control box or transmitter. • Solenoid on vibration valve inoperative. • Exciter assembly damaged. • Exciter motor coupling damaged. • Exciter motor damaged. • Exciter pump damaged.

Problem / Symptom	Reason / Remedy
NO TRAVEL or TRAVEL ONLY IN ONE DIRECTION	• Defective switch or poor connection in control box or transmitter. • Solenoid on travel valve inoperative. • Drive gearcase assembly damaged. • Loose, broken or corroded wire connections. • Drive motor damaged. • Drive pump damaged.
NO HIGH SPEED TRAVEL	• Defective switch or poor connection in control box or transmitter. • Solenoid on manifold inoperative. • Loose, broken or corroded wire connections. • Exciter pump worn or damaged. • Vibration is turned on.
NO STEERING	• Defective switch or poor connection in control box or transmitter. • Solenoid on steering valve inoperative. • Loose, broken or corroded wire connections. • Steering cylinder damaged. • Locking bar is engaged.

5. Engine Starting Troubleshooting

5.1 Component Locations

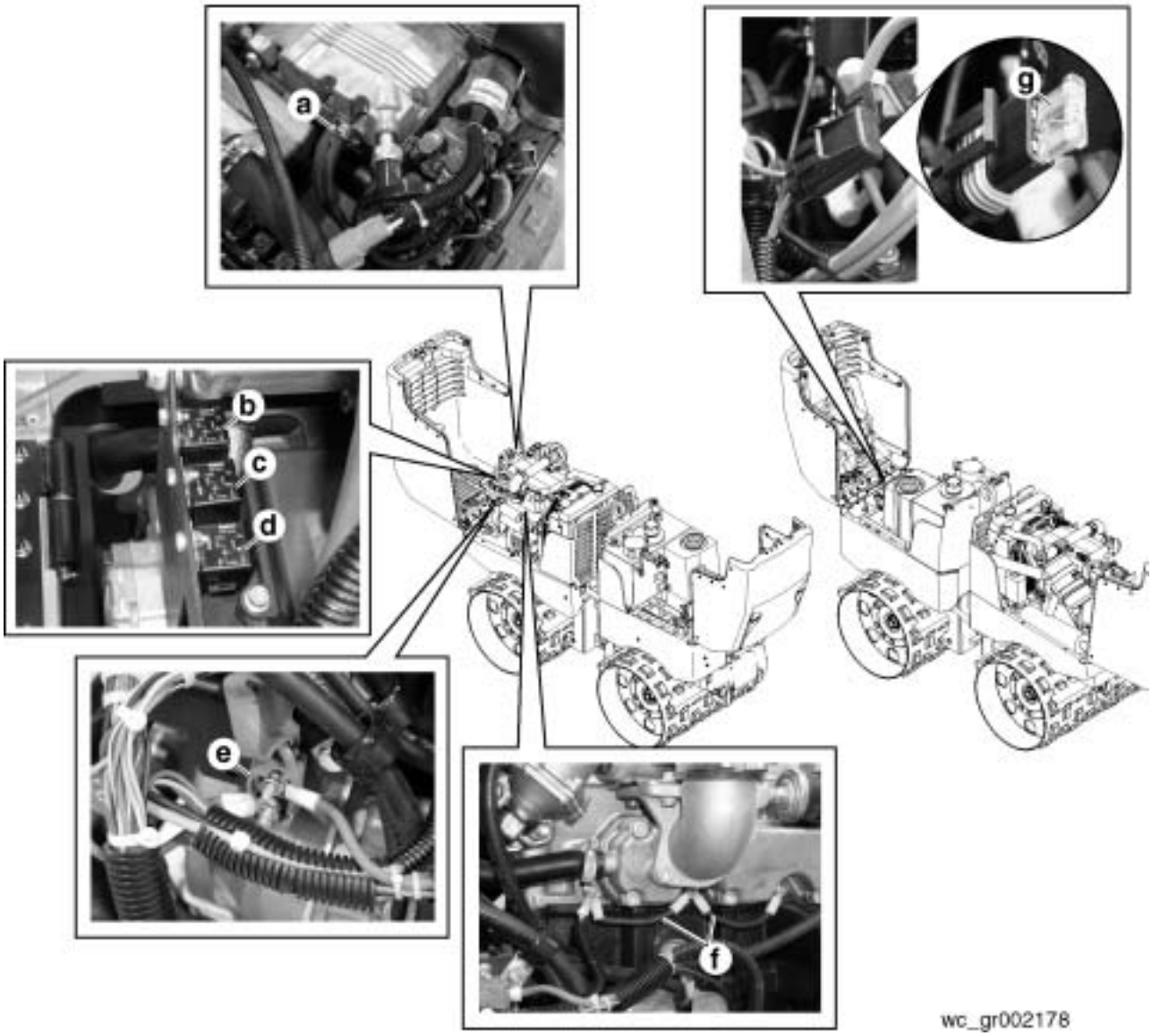

Ref.	Description	Ref.	Description
a	Fuel rail input line	e	Self-resetting, 50A circuit breaker
b	Power relay	f	Glow plug wiring
c	Throttle relay	g	20A Fuse
d	Glow plug relay	--	--

5.2 Troubleshooting Flowcharts

The troubleshooting flowcharts are designed to step you through the process of determining the source of a problem with starting the engine should a problem exist. Many of the tests involve live voltages and therefore should only be attempted by qualified personnel. The procedures for carrying out the tests are included in this manual. Each flowchart includes references (by section number) to the location of the specific procedure(s) in the manual.

5.3 Engine Does Not Crank—Flowchart 1A

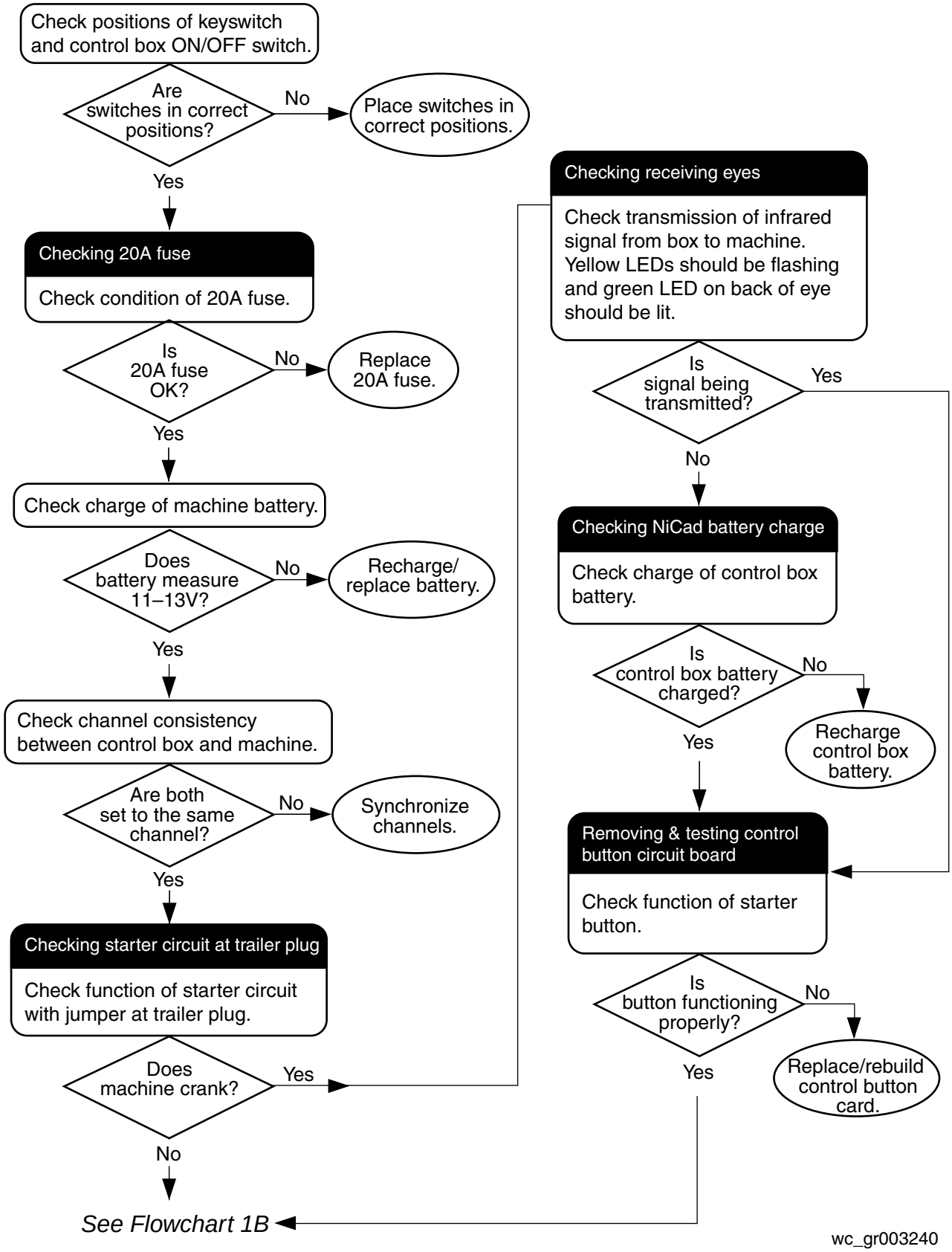

wc_gr003240

Flowchart 1B

Continued from Flowchart 1A

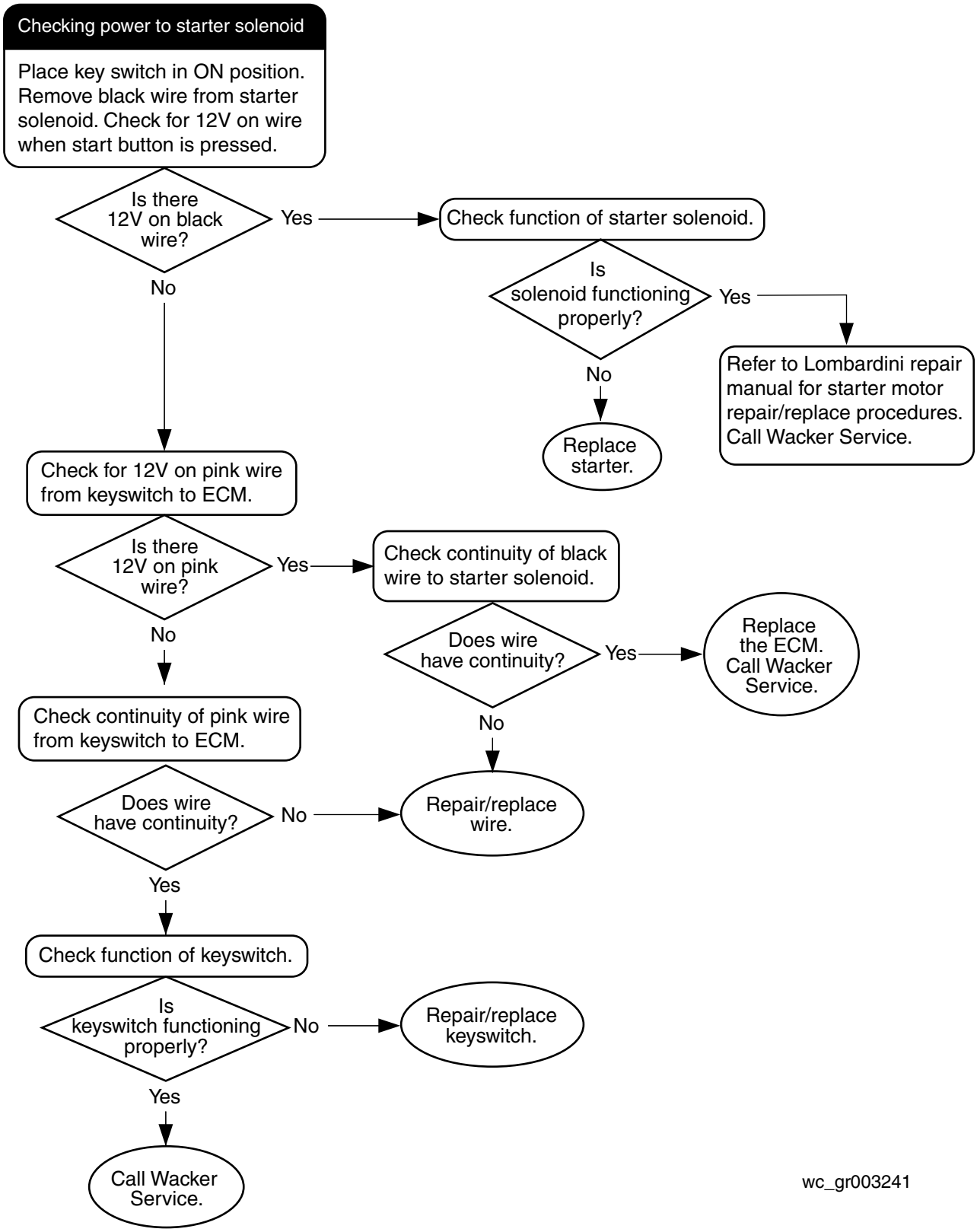

5.4 Checking 20A Fuse

See Graphic: wc_gr002211

The 20A fuse **(b)** in the keyswitch circuit is located in the front section of the machine as shown. It is enclosed in a plastic protective enclosure. Remove the enclosure cover to access the fuse.

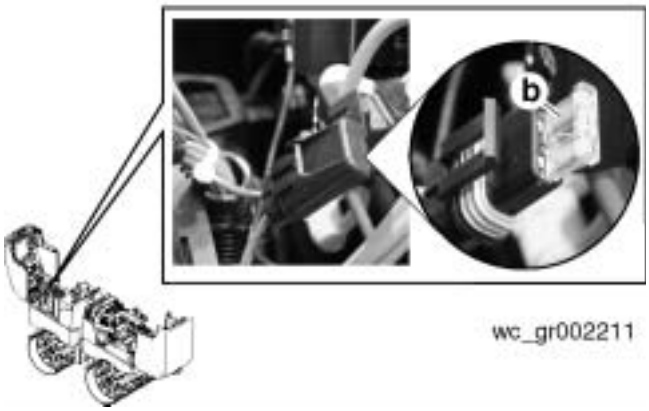

wc_gr002211

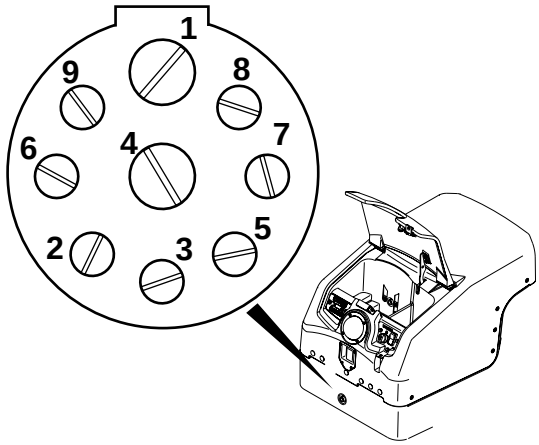

wc_gr002335

5.5 Checking Starter Circuit at Trailer Plug

See Graphic: wc_gr002335

The functions of the decoder and ECM can be tested at the trailer plug. Testing at the trailer plug by-passes the control box and aids in determining if the control box is functioning properly.

To test the crank circuit:

5.5.1 Place the keyswitch in the ON position.

5.5.2 Attach a jumper wire across pins 1 and 3 for two seconds.

If the engine cranks with the jumper wire but not through the control box, the problem lies within the control box.
If the engine does not crank with the jumper wire, the problem could be in the decoder module or its wiring. Check power to and from decoder module, then continue testing the start circuit if necessary.

5.6 Checking Receiving Eyes

See Graphic: wc_gr002179

To check infrared transmission between receiving eyes and control box:

5.6.1 Turn both the machine and the control box ON.

5.6.2 Position the control box within 20 m (65 feet) of the machine. The amber LEDs of the light ring should flash on and off. They will flash rapidly when the control box is held too close to the machine. The amber LEDs will not flash when the control box is held further away than 20 m (65 feet); instead, the amber LEDs will remain illuminated.

5.6.3 If the amber LEDs do not flash, try several different positions until they do flash. Also check the charge of the NiCAD battery and the function of the starter button. If the amber LEDs still don't flash, open the hood and check the green LED **(a)** on the back of the light ring. If the receiving eye is receiving a signal, the green LED will illuminate.

5.6.4 If the green LED is not illuminated, check the wiring between the receiving eye and the decoder module for continuity. Replace the wiring if no continuity is measured.

If neither receiving eye is functioning, disconnect one of the receiving eyes and check if the other now operates. If it does, replace the non-functioning eye. Check each eye in this manner.



wc_gr002179

5.7 Replacing Receiving Eye/Light Ring

See Graphic: wc_gr002344

Removal:

5.7.1 Cut the wire tie **(a)**.

5.7.2 Disconnect the wiring connectors **(b & c)**.

5.7.3 Remove the four screws **(d)** securing the light ring to the cover. Take note that the left hand side screws are longer and with two lock nuts **(e)**, are used to secure the latch. After the screws are removed, the receiving eye/light ring assembly may be removed from the machine.

To separate the receiving eye **(f)** from the light ring **(g)**:

5.7.4 Lift off the outer securing ring **(h)** and the globe **(i)**.

5.7.5 Remove the plastic nut **(j)** and the two components may be separated.

Installation:

5.7.6 Insert the receiving eye **(f)** through the light ring **(g)** and secure them together using the plastic nut **(j)**.

5.7.7 Add the globe **(i)** and the securing ring **(h)**.

5.7.8 Insert the wiring through the cover and secure the assembly with the four screws **(d)**. Use the longer screws on the left hand side; the shorter on the right.

5.7.9 Open the cover and reconnect the wiring **(b & c)**.

5.7.10 Secure the hood latch with the two lock nuts **(e)**.

5.7.11 Secure the wiring with a wire tie **(a)**.

Note: *The LED light ring does not have to be connected for the receiving eye to function. The LED light ring is merely an indicator.*

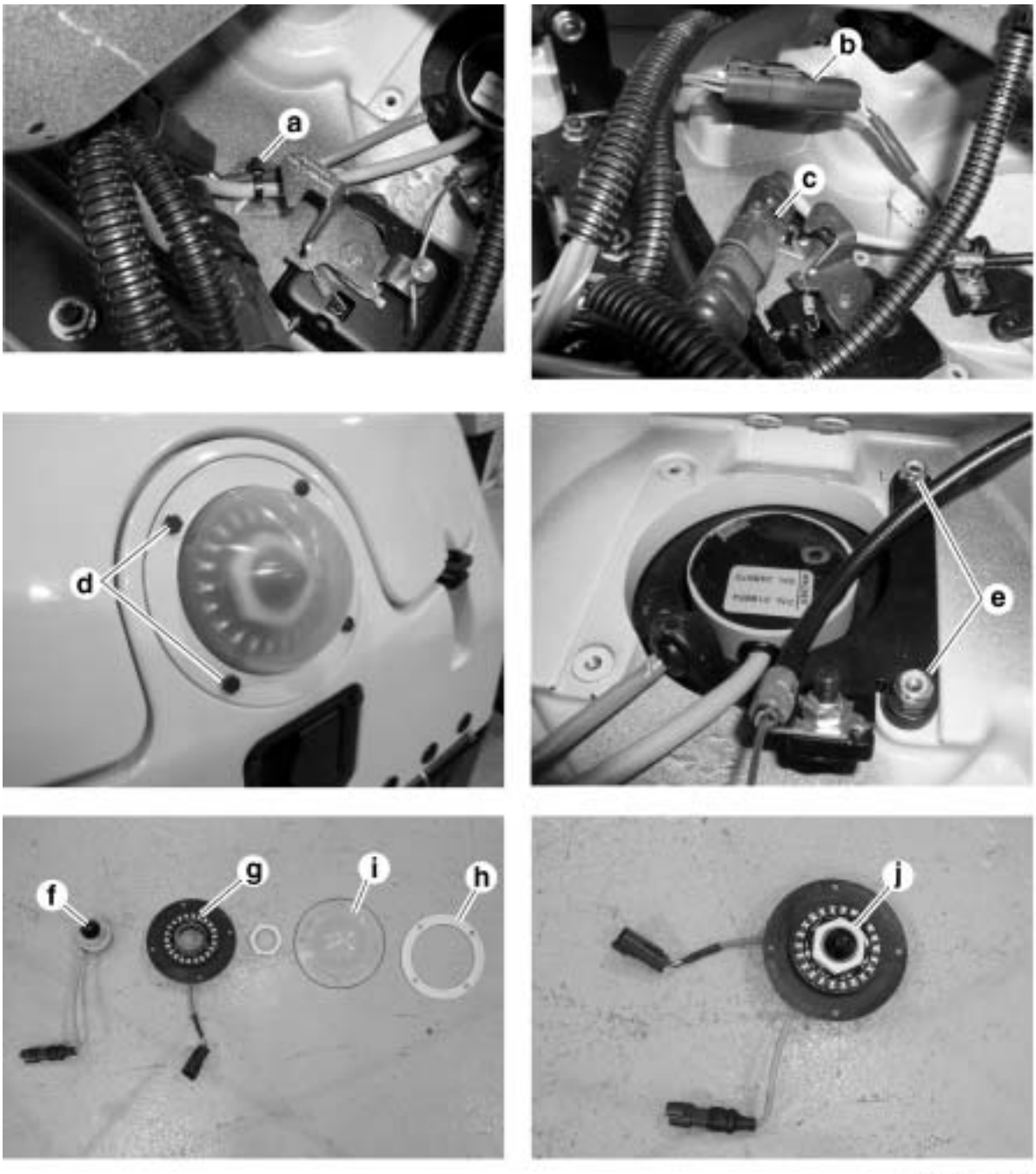

wc_gr002344

5.8 Checking Power to Starter Solenoid

See Graphic: wc_gr002180

To check power to starter solenoid:

5.8.1 Turn keyswitch to ON position.

5.8.2 Place control box ON/OFF switch to the ON position.

5.8.3 Disconnect the black wire **(a)** to the starter solenoid. Press the crank button on the control box and check the wire for 12V.

If 12V is measured on the black wire, check function of starter solenoid. Refer to Lombardini repair manual for starter replacement procedures.

If 12V is not measured, check the wire for continuity. If the wire has continuity, continue.

5.8.4 Check the pink wire **(b)** from the keyswitch to the ECM for 12V.

If 12V is measured on the pink wire at the ECM and not on the black wire, the problem is in the ECM. *See Section Testing ECM*. Call Wacker Service before replacing the ECM.

If 12V is not measured on the pink wire, check the wire for continuity. If the wire has continuity, continue.

5.8.5 Check function of keyswitch. Remove screws **(c)**, remove connector **(d)**, place the switch in the ON position and test the switch for continuity.

If the keyswitch is not functioning properly, replace it.

If the keyswitch is functioning properly, call Wacker Service.

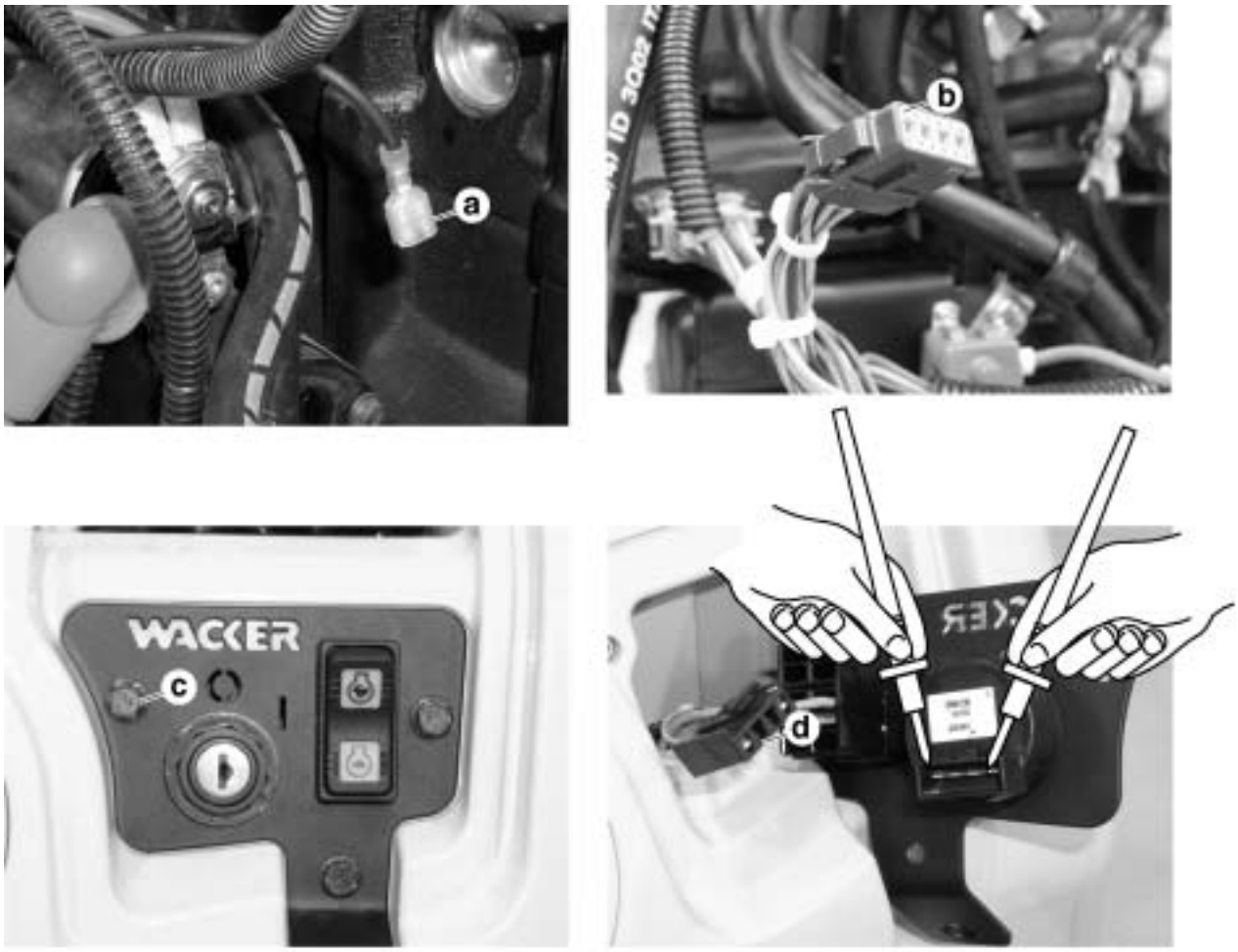

wc_gr002180

5.9 Replacing Keyswitch

See Graphic: wc_gr002210

Removal:

5.9.1 Turn machine OFF and disconnect battery.

5.9.2 Remove screws securing faceplate and pull faceplate from machine.

5.9.3 Disconnect plug **(a)** from back of keyswitch **(b)**.

5.9.4 Remove retaining nut **(c)** and spacer and remove keyswitch.

Installation:

5.9.5 Secure keyswitch **(b)** to faceplate with spacer and retaining nut **(c)**.

5.9.6 Connect plug **(a)** to keyswitch.

5.9.7 Secure faceplate to machine.

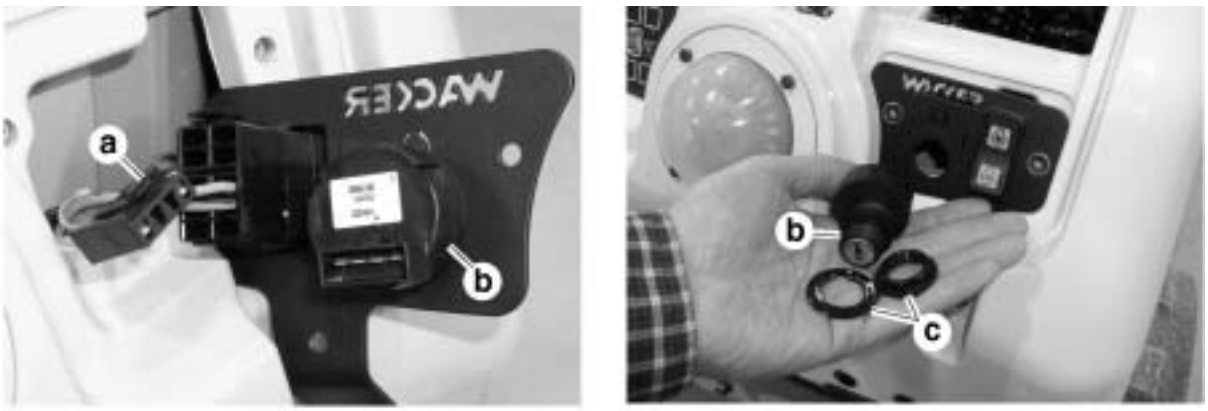

wc_gr002210

5.10 Checking NiCad Battery Charge

See Graphic: wc_gr002336

To check the charge of the NiCad battery, remove the battery and check for voltage as shown. A fully charged battery will have a minimum of 7.2 Volts.

To charge the battery:

5.10.1 Plug the transmitter box into the charging jack on the machine for a minimum of 40 minutes. When doing so, check that the green charging LED illuminates, indicating that a good connection has been made.
Note: *The charge connector is always on and connected to the machine's 12V battery.*

5.10.2 The low battery charge LED will flash red when the battery needs to be recharged. A battery will need to be recharged when it reaches approximately 6.5Vdc.

5.10.3 Replace the battery when it is only able to operate for three or four hours.

Do not allow a discharged battery to sit in the transmitter box.

Discard the battery if it shows signs of leaking.

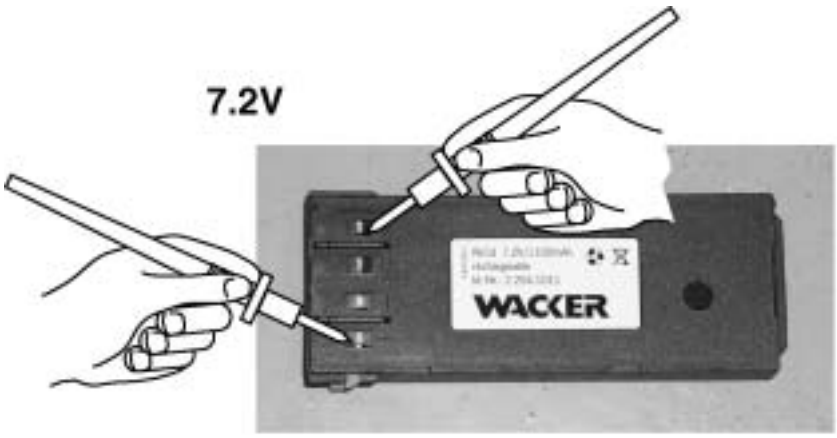

wc_gr002336

5.11 Engine Cranks But Does Not Start—Flowchart 2A

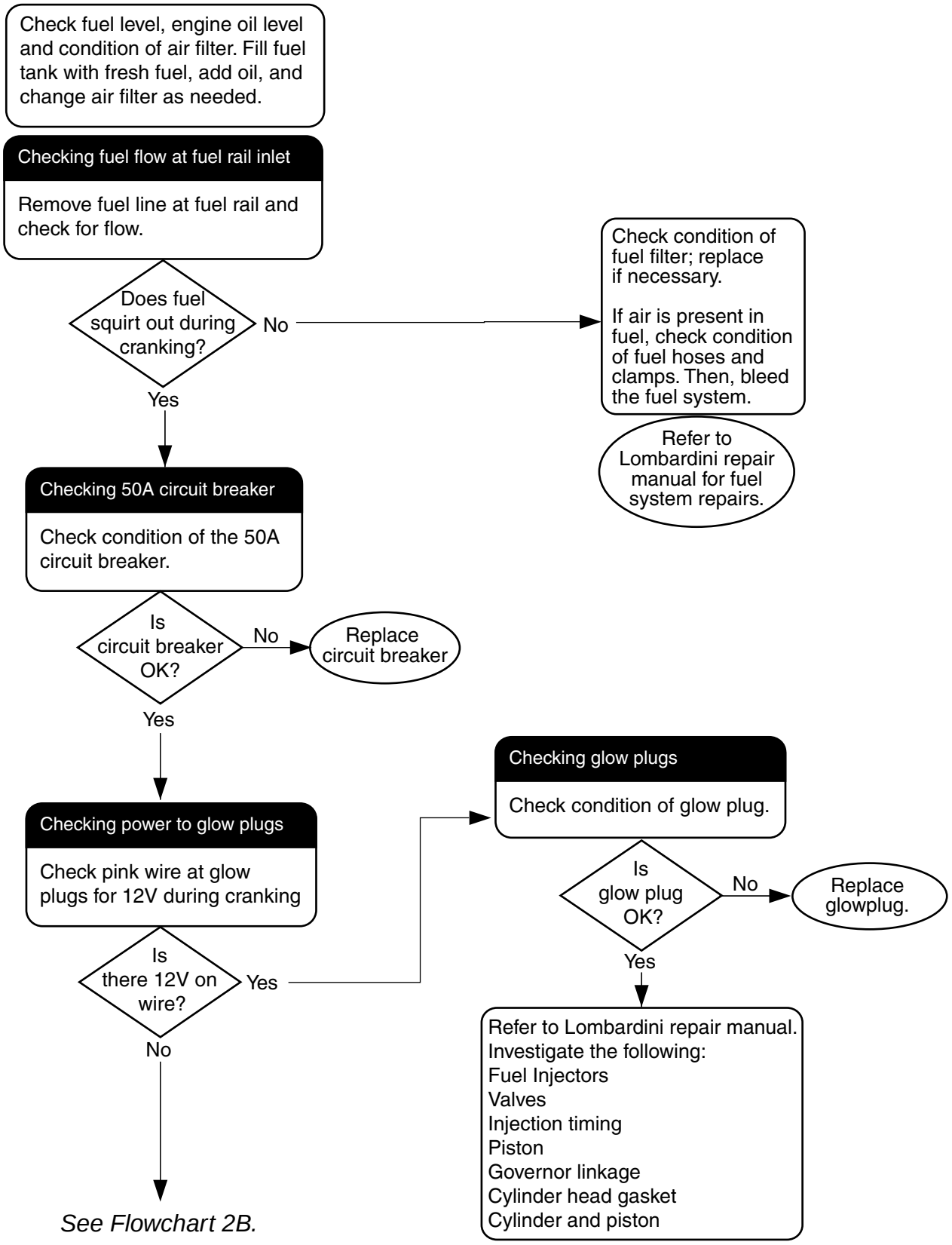

wc_gr003242

Flowchart 2B

Continued from Flowchart 2A.

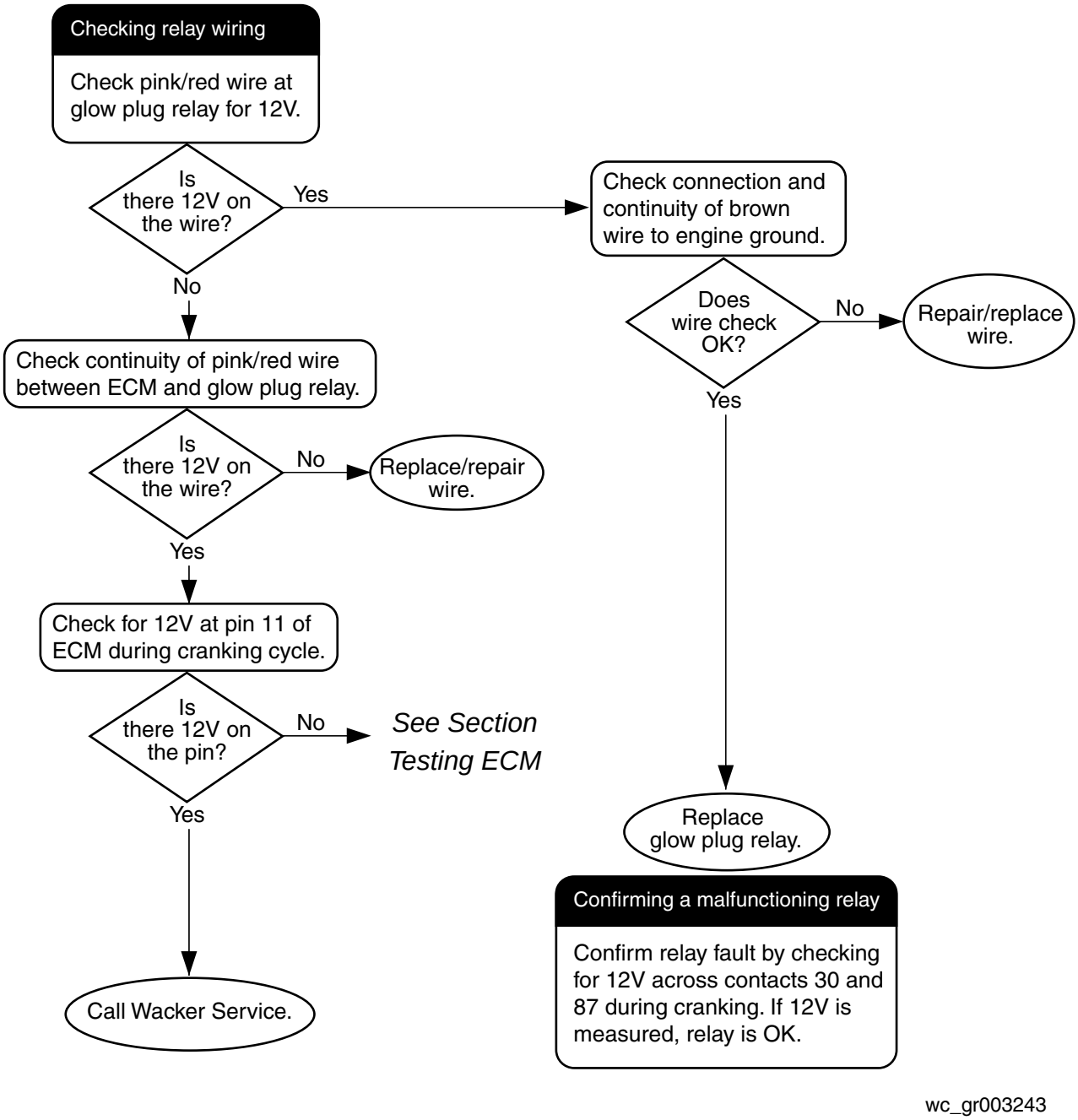

wc_gr003243

5.12 Checking Fuel Line at Fuel Rail Inlet

See Graphic: wc_gr002212

5.12.1 Have a container ready to catch fuel. Remove the fuel line **(a)** at the rail inlet.

5.12.2 With the keyswitch and the control box ON/OFF switch in the ON positions, press the engine crank button and observe the fuel line. Fuel should flow from the fuel line.

If fuel does not flow from line, check for a clogged fuel filter or fuel lines.

If air is in the fuel stream, check fuel lines and clamps. Then, bleed the fuel system.

If you still have no flow, refer to the Lombardini repair manual.

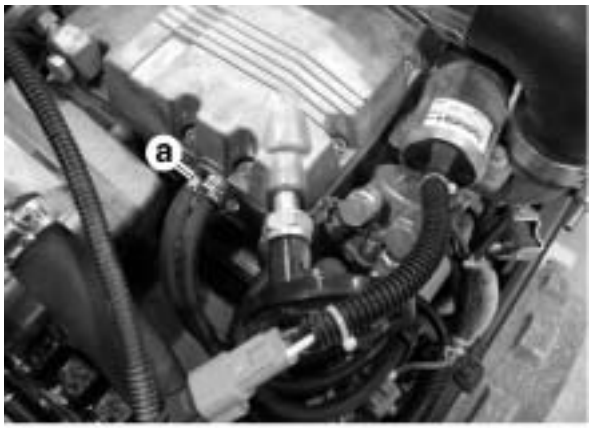

wc_gr002212



wc_gr002213

5.13 Checking 50A Circuit Breaker

See Graphic: wc_gr002213

CAUTION

Burn hazard. The 50A circuit breaker can be hot to the touch. Allow the circuit breaker to cool before handling it.

The 50A circuit breaker **(b)** in the starter solenoid circuit is located in the front section of the machine mounted on the left side of the engine. It is a self-resetting-type circuit breaker and is enclosed by a red rubber boot. The circuit breaker is tripped by heat and automatically resets itself once cool. When cool, a working 50A circuit breaker will have 12V incoming and 12V outgoing. If you measure less than 12V outgoing, replace the 50A circuit breaker.

5.14 Checking Power to Glow Plugs

See Graphic: wc_gr002214

The pink (power) wire **(a)** runs to the glow plugs as shown. Check the wire for 12V. If 12V is not measured, check the continuity of the wire and replace or repair the wire as needed.



wc_gr002214



wc_gr002033

5.15 Checking Glow Plugs

See Graphic: wc_gr002033

5.15.1 Remove the glow plug from the engine.

WARNING

Burn hazard. Glow plugs can reach temperatures up to 1200°F (649°C). Do not touch the element of the glow plug. Be extremely careful when testing the glow plug.

5.15.2 Using 10-gauge wire, apply 12VDC to the glow plug—positive on the upper portion and ground the base. If the glow plug does not heat (glow) within five seconds, replace the glow plug.

Note: *If any one of the glow plugs needs replacing, replace all of them.*

5.16 Checking Relay Wiring

See Graphic: wc_gr002215

5.16.1 Turn the keyswitch and the control box ON/OFF switch to the ON positions. When checking the glow plug relay, do so immediately after turning the ON/OFF switch to the ON position during the glow plug warm-up period.

5.16.2 Slide the connector **(a)** down the spade of the relay just enough to allow a multimeter probe to contact the spades. Or, remove the connector completely.

5.16.3 Check for 12V between the connector power lead and ground. The power lead will be the pink wire with striping: pink/red on glow plug relay, pink/green on throttle relay, and pink/gray on power relay.

If 12V is not measured, check the wire for continuity and repair or replace the wire as needed.

Also check that the brown wire(s) provide a good ground for the relay. Check the brown wire(s) for continuity. Repair or replace the wires as needed.

5.16.4 If the wire continuity is OK and 12V is still not measured, the problem lies within the ECM (engine control module) or the wiring to the ECM. Check the power into the ECM.

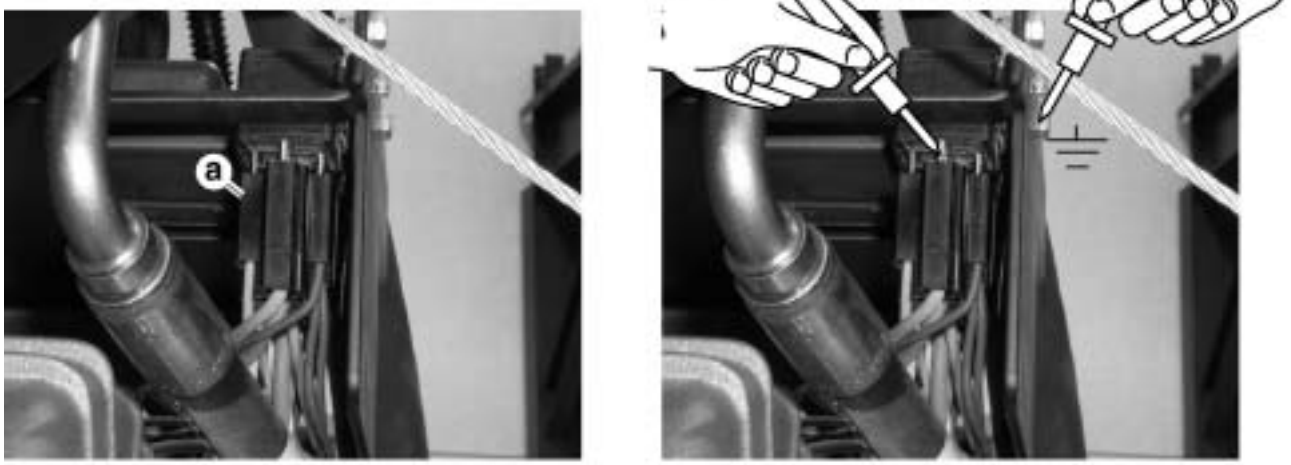

wc_gr002215

5.17 Confirming a Malfunctioning Relay

See Graphic: wc_gr002330

If the power lead to the relay measures 12 Volts and the brown wire to the relay supplies a good ground, confirm the relay is malfunctioning by:

5.17.1 The power **(a)**, throttle **(b)**, and glow plug relays **(c)** are identical. Temporarily exchange the suspect relay (power, throttle, or glow plug) with one known to be working (throttle or glow plug). Do not disconnect the power relay and use it as a test relay. The power relay is required for all functions.

5.17.2 Place the keyswitch and the control box ON/OFF switch in the ON positions. If testing the throttle relay, press the throttle switch.

If the function (glow plug, throttle, or power) works with a known-to-be-working relay, the suspect relay is bad; replace it.

Alternative method:

5.17.3 Disconnect the relay in question.

5.17.4 Place a jumper **(d)** across the connector as shown and check if the function works (power, throttle, or glow plugs). If the function works with the jumper in place, the relay is bad; replace it. Power to the throttle relay is only momentary. Repeat test if necessary.

Note: *Simply listening for the relay to "click" when power is supplied to it, is not an adequate test.*

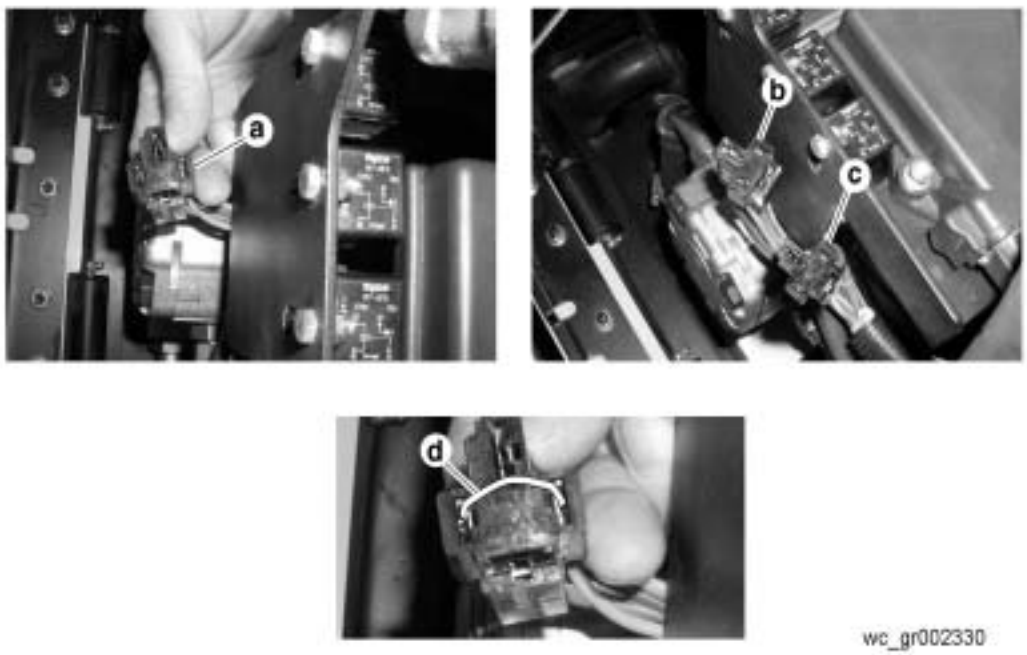

wc_gr002330

5.18 Testing ECM

An overall test of the ECM can be made by checking for battery voltage to the following components during the conditions listed. If battery voltage is not found, the ECM is faulty.

Note: *These tests assume that there is power to the ECM (key switch and control box ON/OFF switch in the ON positions), that all wire connections are tight, and that all wires have continuity. Check all connections and wiring before conducting these tests.*

Table 1:

Battery Power (12V) at Component	Conditions
Power relay connector—pink/grey wire	Always
Throttle hold—pink/purple wire	Always
Glow plug relay connector—pink/red wire	During glow plug timer cycle immediately after machine is switched on.
Throttle relay (pull)—pink/green wire	Momentarily whenever the throttle switch is placed in the fast position.
Starter solenoid—black wire	Only when the engine crank button is pressed.
Fuel solenoid—yellow/tan wire	Always

5.19 Checking Fuel Solenoid

See Graphic: wc_gr002343

To check the condition of the fuel solenoid, remove the wire **(a)** from the fuel solenoid and check its resistance. A functioning solenoid should measure 17.8 Ohms. The solenoid will draw 0.5 Amps.

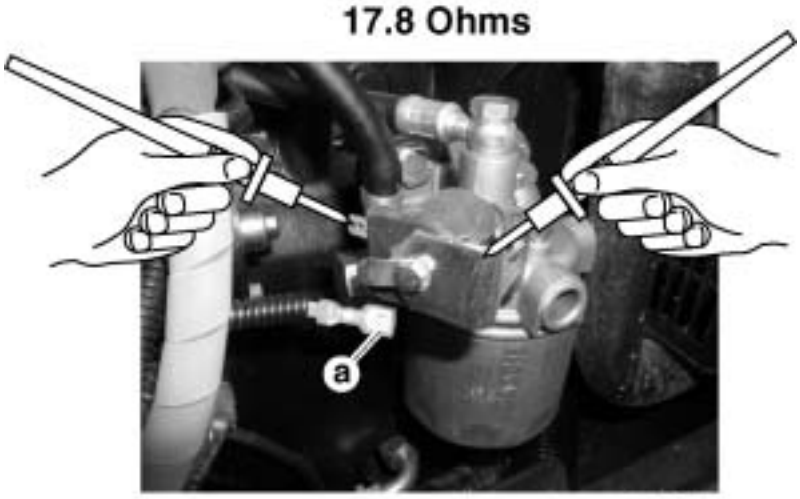

wc_gr002343

5.20 Replacing Battery

See Graphic: wc_gr002367

Removal:

5.20.1 Remove the nut **(a)** securing the air cylinder to the hood. This allows enough room to lift the battery up and out of the compartment.

5.20.2 Remove the two clamp nuts **(b)** from the rods **(c).** Remove the clamp **(d)** and pull the battery from the frame.

Installation:

Note: *Do not connect the battery until all installation steps are complete.*

5.20.3 Place the battery into the machine.

5.20.4 Secure the battery to the frame using clamp **(d)**, rods **(c)** and clamp nuts **(b)**.

5.20.5 Reconnect the air piston with nut **(a)**.

5.20.6 Reconnect the battery.

CAUTION: Be certain to connect the battery leads to the correct terminals of the battery. Incorrect connections may damage the ECM and other electrical components.

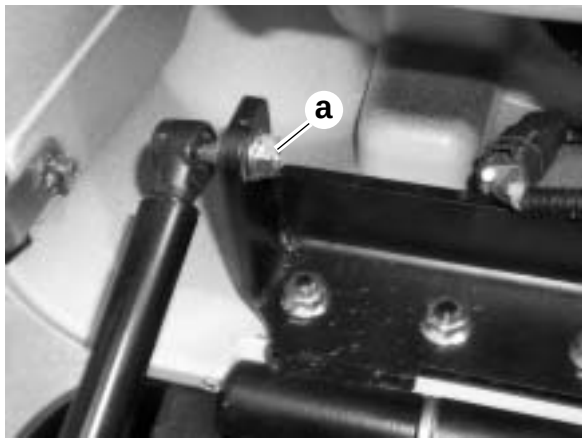

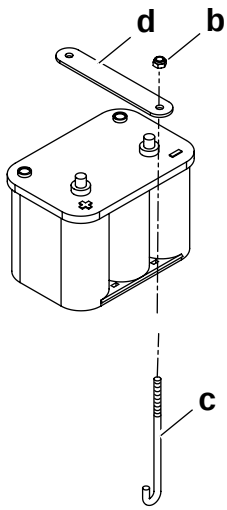

wc_gr002367

5.21 Replacing Trailer Plug

See Graphic: wc_gr002345

Removal:

5.21.1 Disconnect and remove the battery.

5.21.2 Remove the four screws **(a)** and lock nuts **(b)** securing the trailer plug **(c)** to the frame.

5.21.3 Disconnect the wiring harness from the decoder module at the brown connector.

Installation:

5.21.4 Secure the trailer plug **(c)** to the frame with the four screws **(a)** and lock nuts **(b)**.

5.21.5 Connect the wiring harness to the decoder module.

5.21.6 Re-install the battery.



wc_gr002345

Notes:

6. Hydraulic System

See Graphic: wc_gr000990

Pressure in the hydraulic system is generated by two gear pumps—the drive pump (4) and the exciter pump (6). Both pumps provide 6 gpm (24 lpm). The exciter pump is driven by the engine's crankshaft, while the drive pump is driven by the engine's camshaft.

A control manifold (8) directs oil flow from the pumps to the motors and steering cylinder. The control manifold is mounted beneath the control panel at the rear of the machine. It consists of the main block; exciter vibration (7), travel (14), high-speed travel (15), brake (2), and steering (12) valves. All valves are solenoid operated. During operation, the solenoids respond to the electrical signals being transmitted by the operator from the control box. There are four relief valves in the control block: the exciter relief valve limits pressure to 3500 psi (24 mPa); the brake relief valve is set at 90 psi (620 kPa); drive pressure relief valve is set at 3000 psi (21 mPa); and the steering circuit relief is set at 1000 psi (7 mPa).

Oil from the hydraulic tank flows through a suction strainer (13) before it is drawn into the pump suction ports. The suction strainer is mounted in the tank and is magnetic for removing metal particles. Hoses connect the output ports of the pumps to the main block on the control manifold. The main manifold directs oil flow into the vibration and travel valves. These valves in turn supply hydraulic pressure to operate the exciter and drive motors.

When operating in low-speed travel, the exciter pump is used to operate the exciter motors (5) and the drive pump is used to operate the drive motors (3). When operating in high-speed travel, the vibration valve and high-speed valve redirect exciter pump oil flow away from the exciter motors to the drive motors. During high-speed travel the exciter motors do not operate. The machine may travel in high speed both forward and reverse.

Return oil from the drive circuit flows to the steering valve (12) which directs it to the steering cylinder (11).

The hydraulic system is protected by an oil cooler (9) and return line filter (10). The return line filter removes particles down to 10 microns and includes a by-pass in case the filter should plug.

A parking brake (1) is located in the rear drum. The brake is connected to the hydraulic system through the brake valve of the control manifold. The brake is spring activated and hydraulically disengaged. Hydraulic oil flow to the brake is enabled as soon as the engine starts. Thus, when the engine is running, the brake is *disengaged*; when the engine is not running, the brake is *engaged*.

Refer to the circuit diagrams included in this chapter.

6.1 Hydraulic Manifold

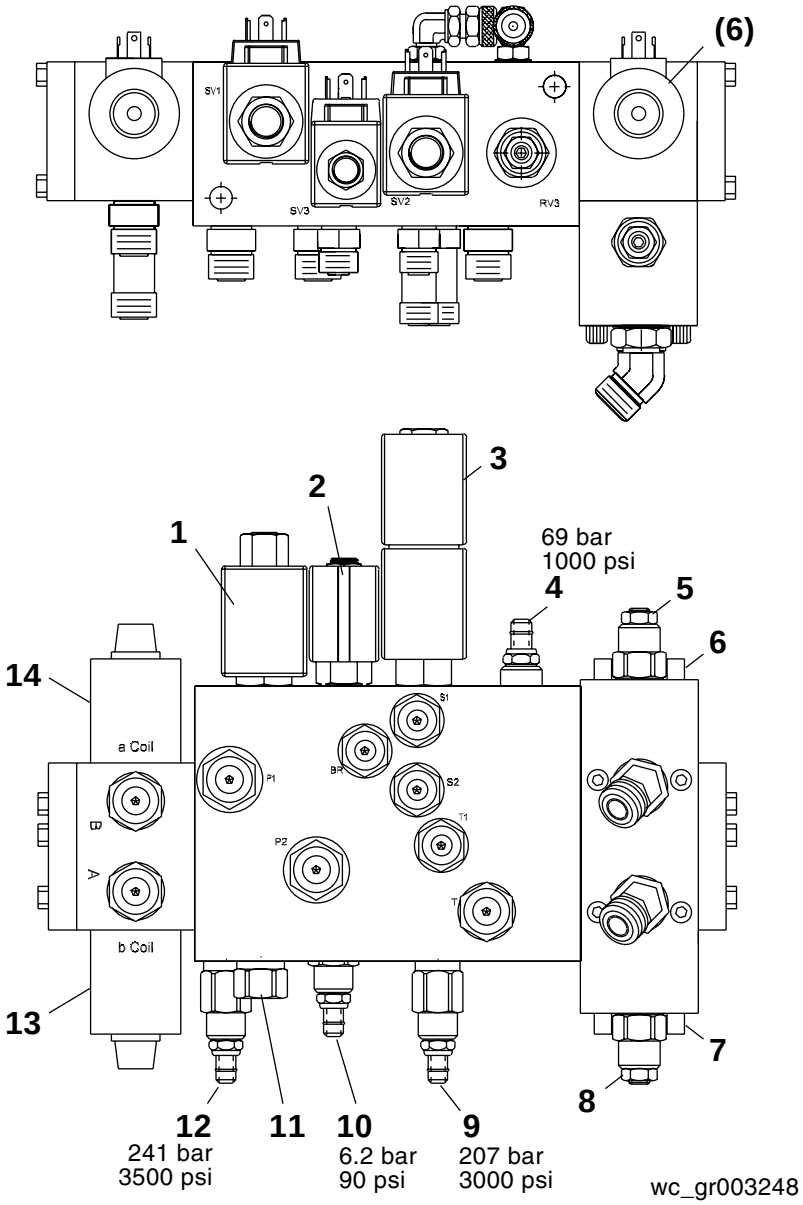

6.2 Hydraulic Valves

See Graphic: wc_gr003248

Ref.	Valve Description	Ref.	Valve Description
1	High speed drive	8	Counter balance relief “A”
2	Brake	9	Drive relief (207 bar/3000 psi)
3	Steering	10	Brake relief (6.2 bar/90 psi)
4	Steering relief (69 bar/1000 psi)	11	Check valve
5	Counter balance relief “B”	12	Exciter relief (241 bar/3500 psi)
6	Reverse drive	13	Low vibration
7	Forward drive	14	High vibration

6.3 Hydraulic System Pressures

	Operating Pressure bar (psi)	**Relief Pressure** bar (psi)
Drive—low speed	83 (1200)	207 (3000)
Drive—high speed	103 (1500)	207 (3000)
Exciter—low speed	83 (1200)	241 (3500)
Exciter—high speed	103 (1500)	241 (3500)
Steering	69 (1000)	69 (1000)
Brake	6.2 (90)	6.2 (90)

6.4 Hydraulic Schematics

BOM 9026 SN 55461321 and lower; BOM 9025 SN 5549417 and lower

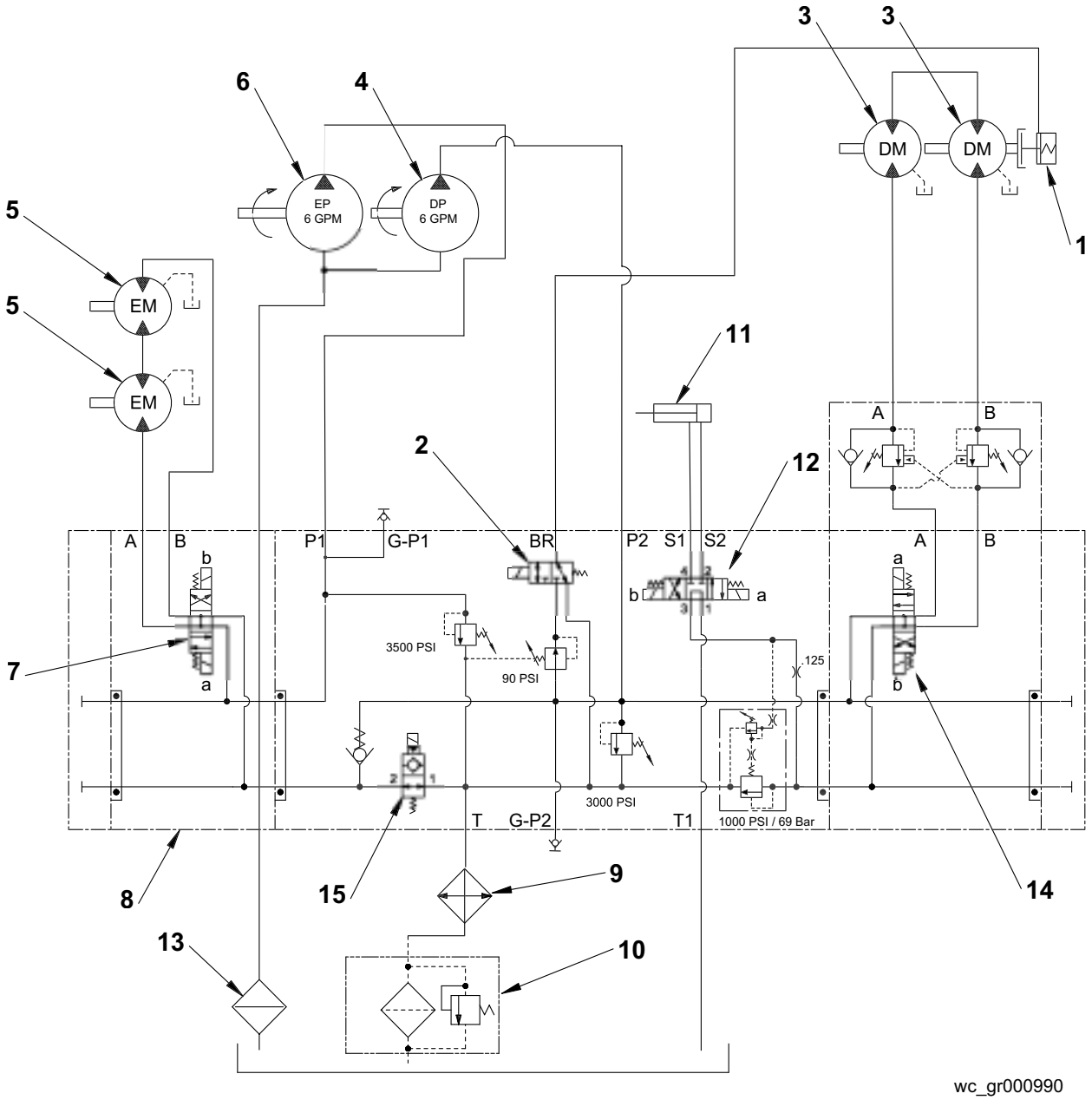

Hydraulic Schematic Components

See Graphic: wc_gr000990

Ref.	Description	Ref.	Description
1	Parking brake	9	Oil cooler
2	Brake valve	10	Return line filter
3	Drive motor	11	Steering cylinder
4	Drive pump	12	Steering valve
5	Exciter motor	13	Suction strainer
6	Exciter pump	14	Travel valve
7	Exciter (vibration) valve	15	High-speed travel valve
8	Control manifold		

BOM 9026 SN 55461322 and higher; BOM 9025 SN 5549418 and higher

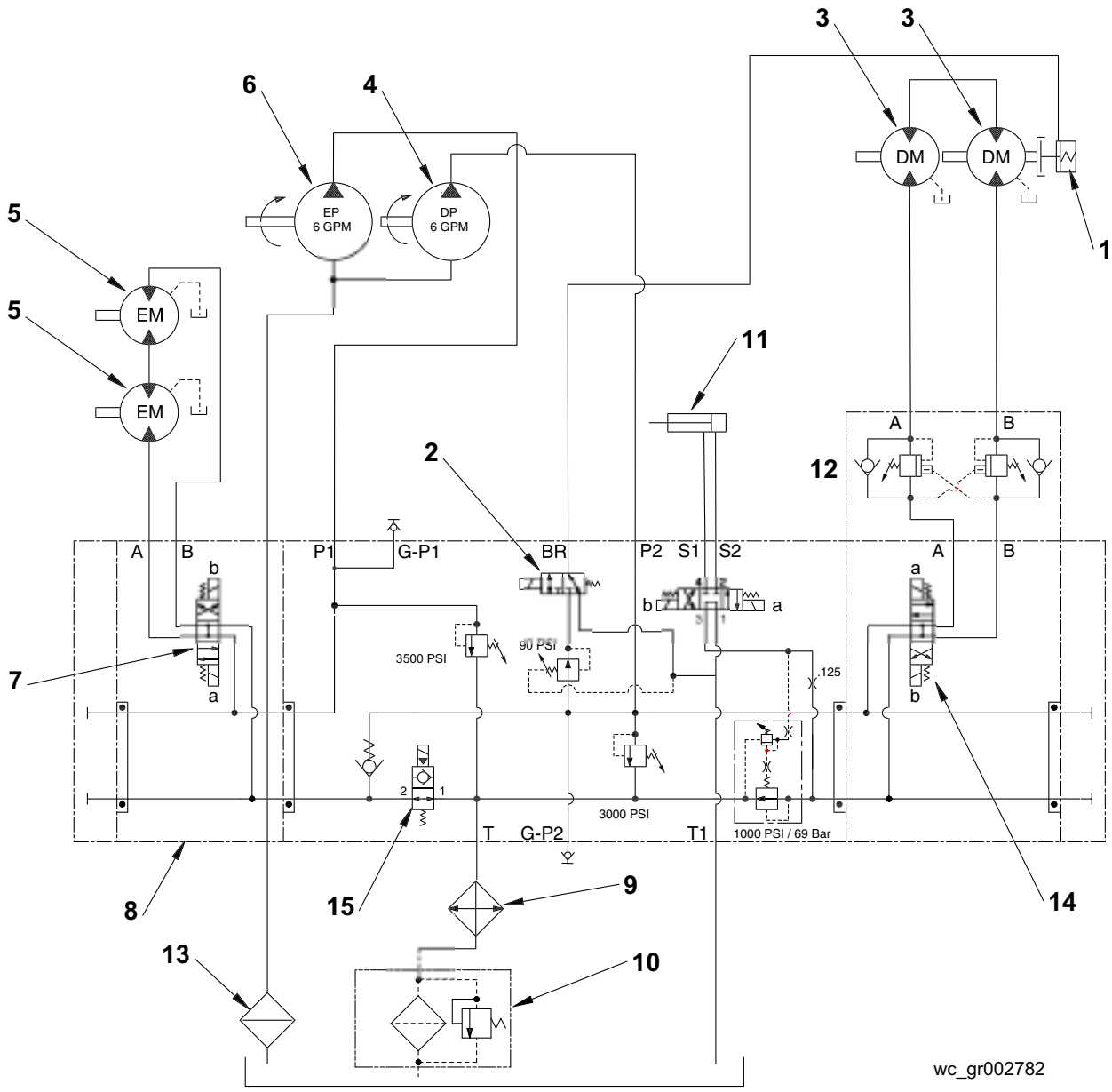

Hydraulic Schematic Components

See Graphic: wc_gr002782

Ref.	Description	Ref.	Description
1	Parking brake	9	Oil cooler
2	Brake valve	10	Return line filter
3	Drive motor	11	Steering cylinder
4	Drive pump	12	Steering valve
5	Exciter motor	13	Suction strainer
6	Exciter pump	14	Travel valve
7	Exciter (vibration) valve	15	High-speed travel valve
8	Control manifold		

6.5 Hydraulic Diagram

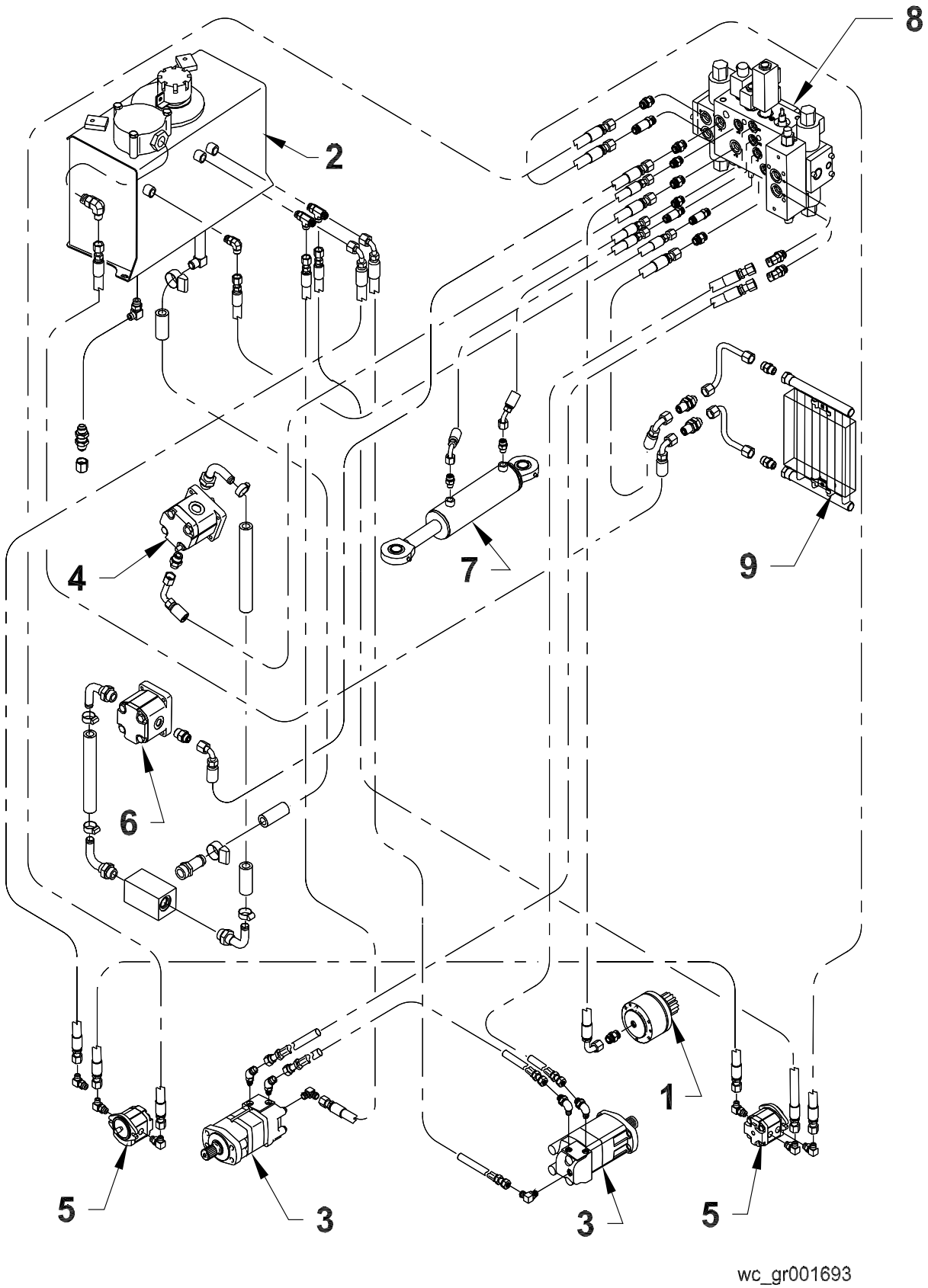

6.6 Hydraulic Diagram Components

See Graphic: wc_gr001693

Ref.	Description	Ref.	Description
1	Parking brake	6	Exciter pump
2	Hydraulic tank	7	Steering cylinder
3	Drive motor	8	Control manifold
4	Drive pump	9	Oil cooler
5	Exciter motor		

6.7 Exciter Circuit

BOM 9026 SN 55461321 and lower; BOM 9025 SN 5549417 and lower

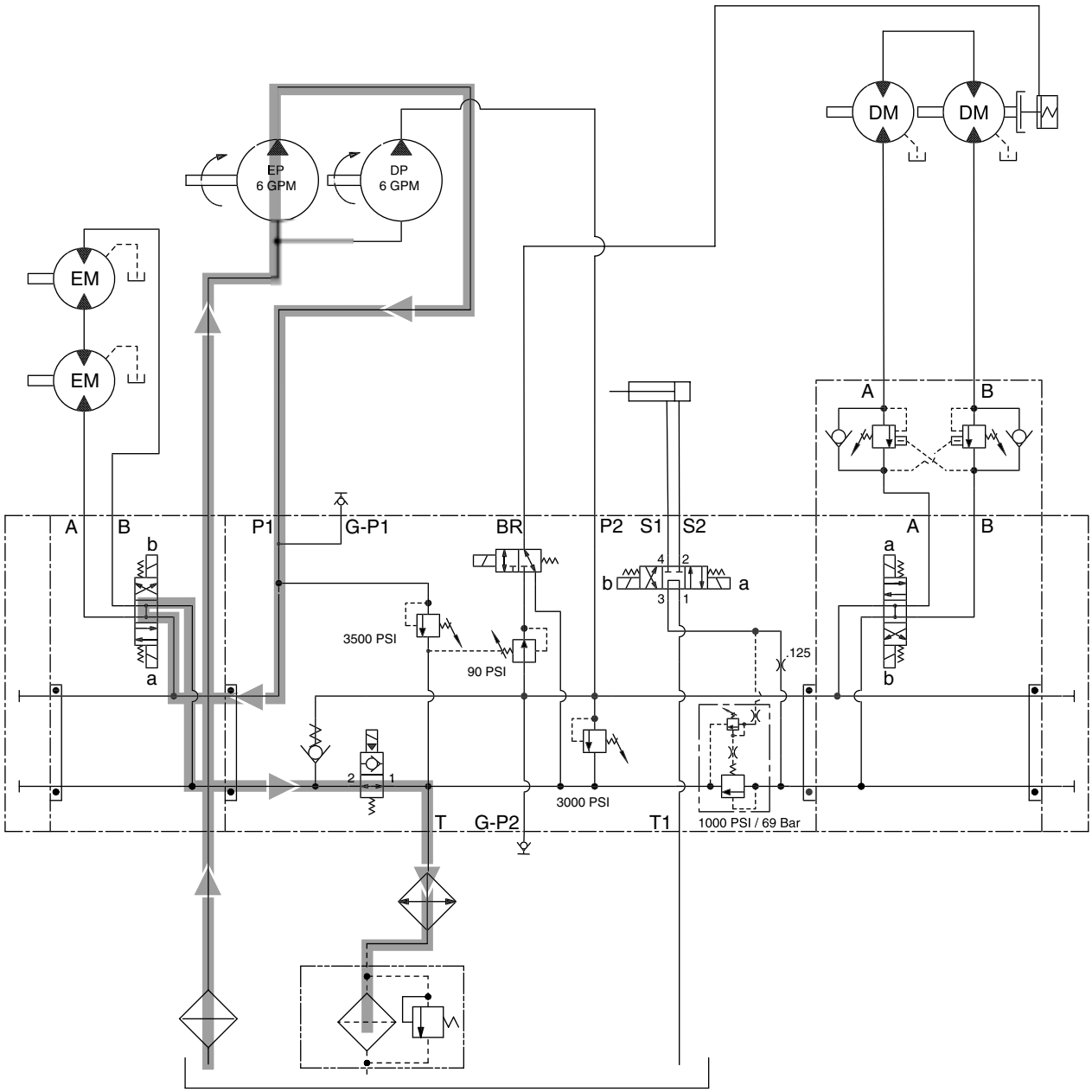

wc_gr002126

No Vibration

BOM 9026 SN 55461321 and lower; BOM 9025 SN 5549417 and lower

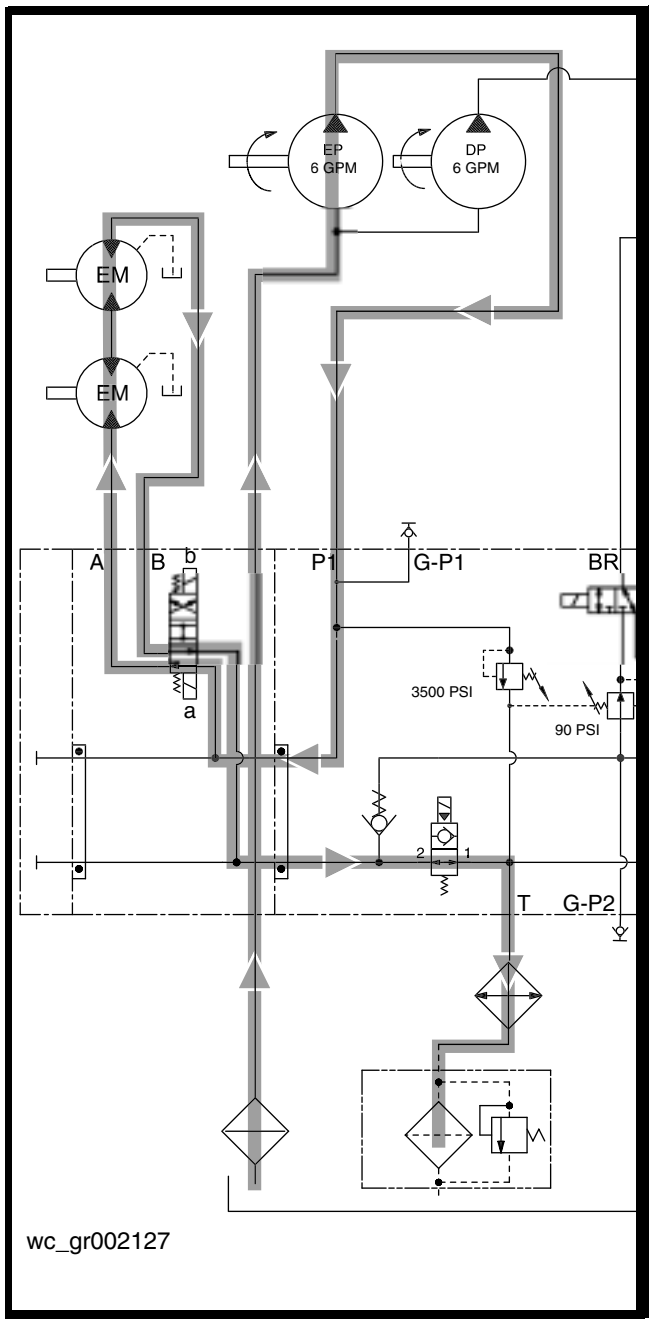

Low Vibration

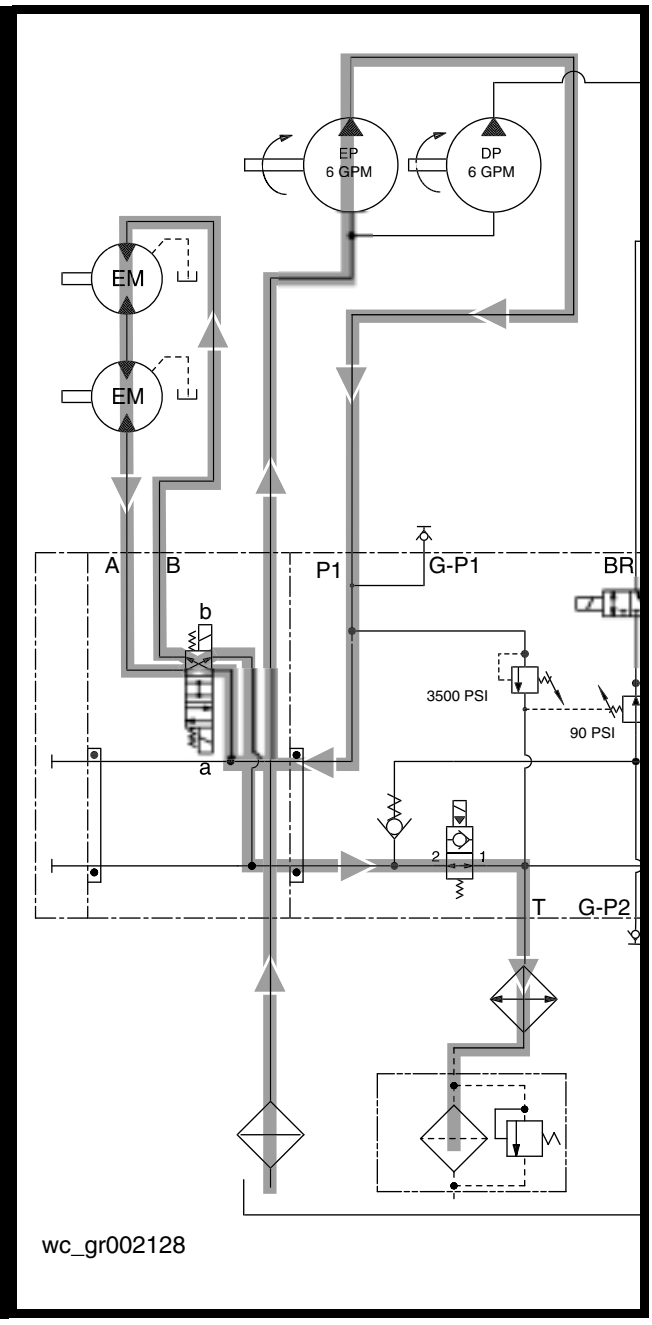

High Vibration

BOM 9026 SN 55461322 and higher; BOM 9025 SN 5549418 and higher

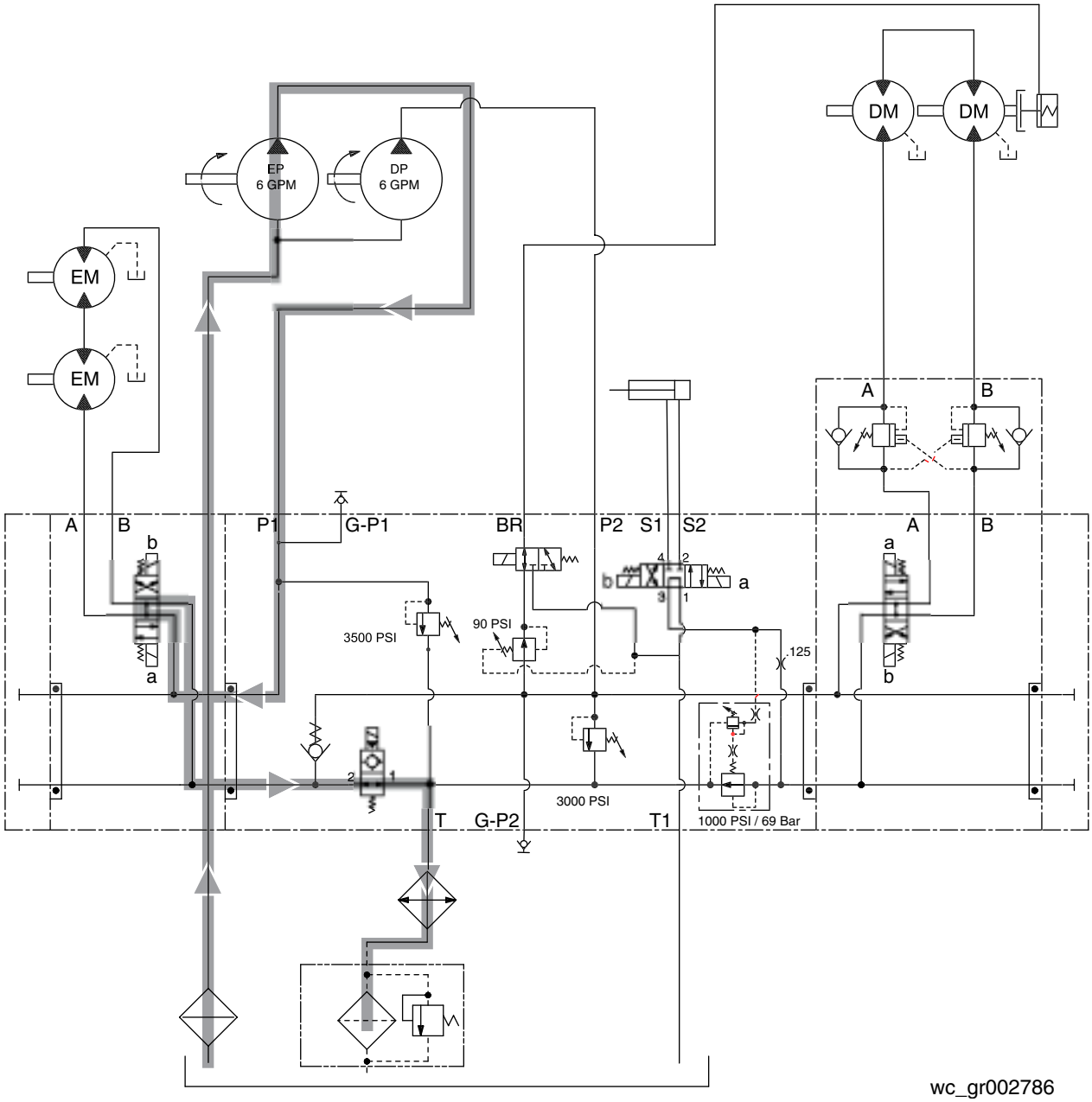

No Vibration

BOM 9026 SN 55461322 and higher; BOM 9025 SN 5549418 and higher

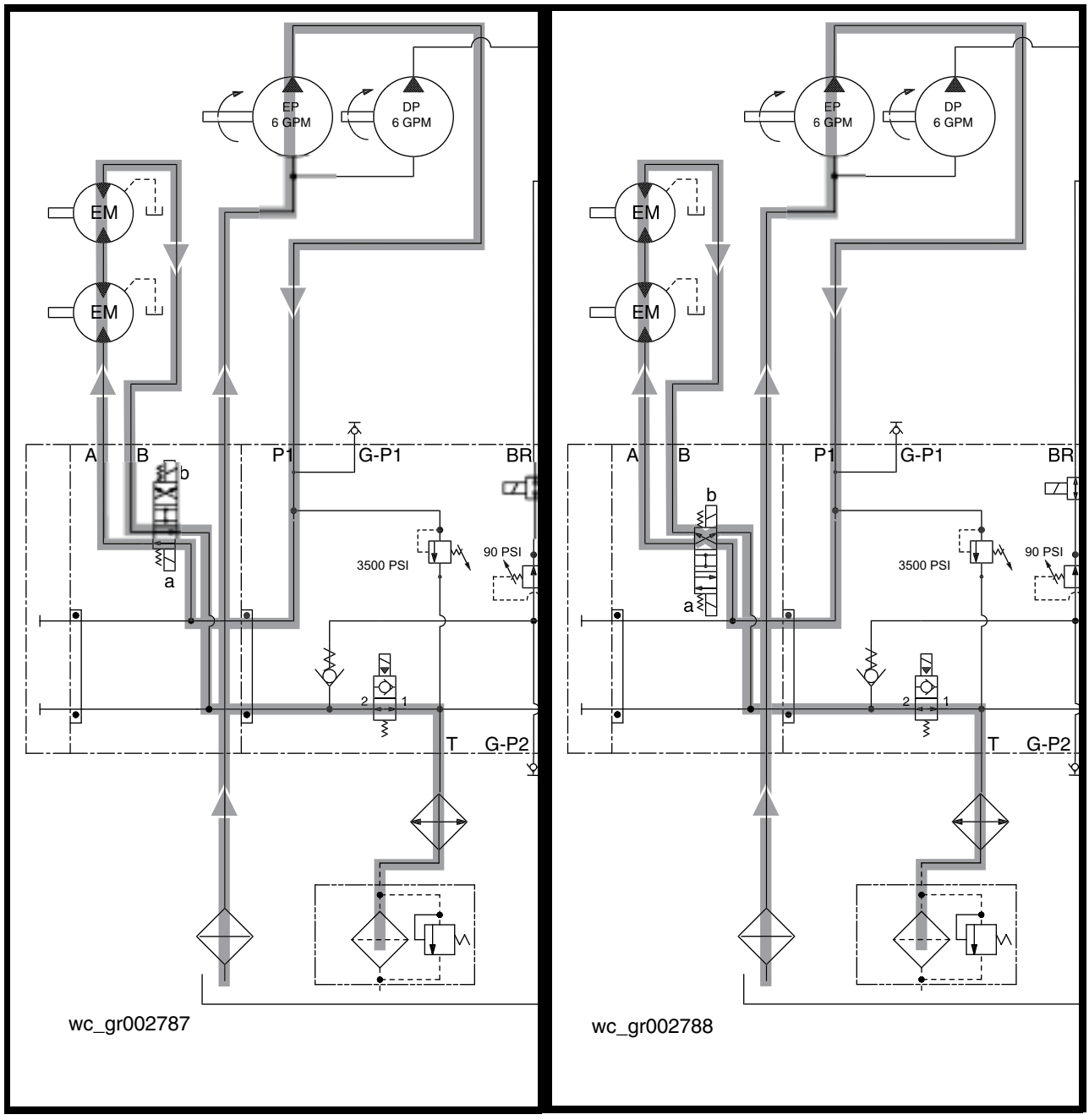

Low Vibration **High Vibration**

6.8 Drive and Brake Circuit

BOM 9026 SN 55461321 and lower; BOM 9025 SN 5549417 and lower

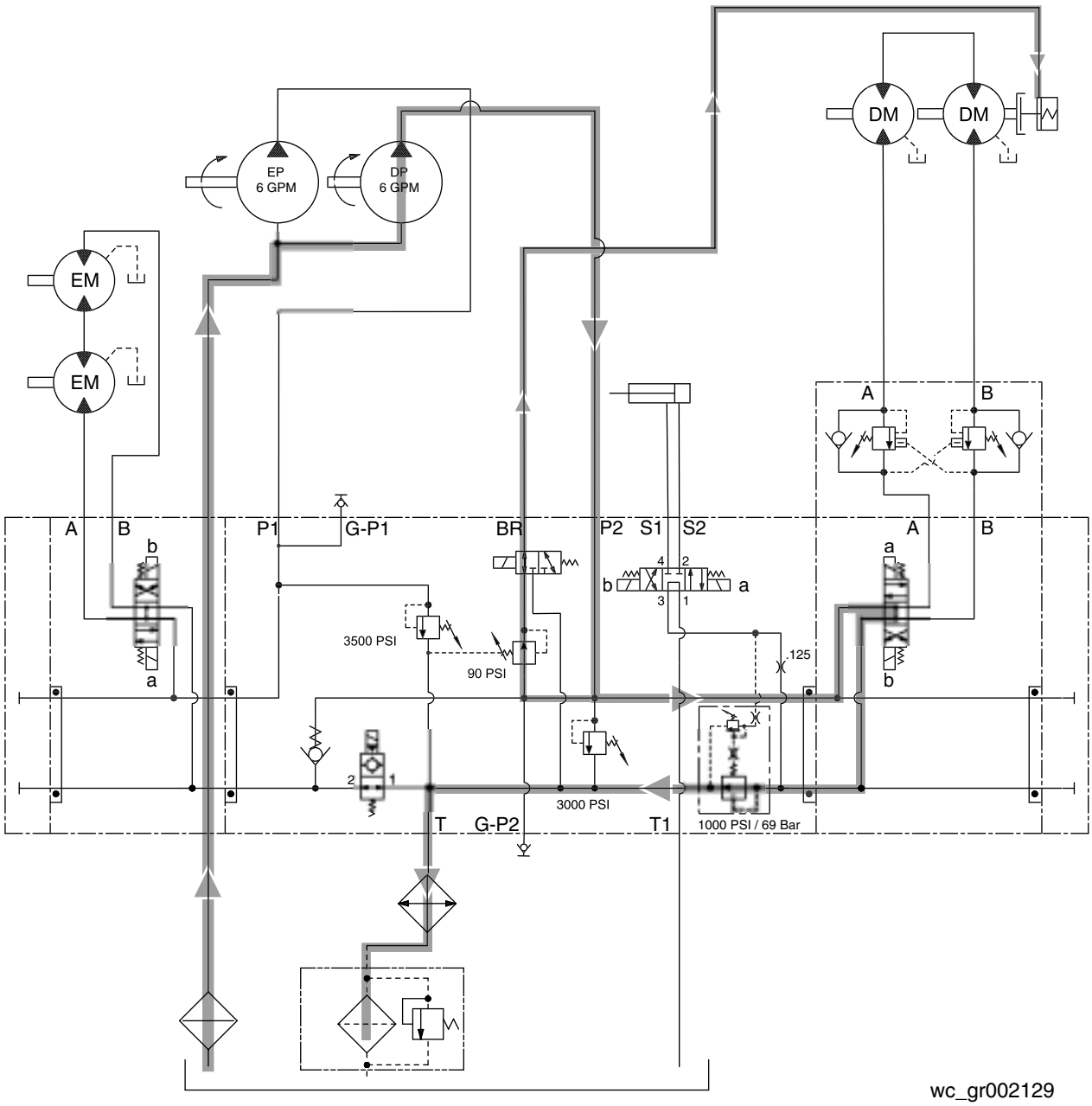

No Movement

BOM 9026 SN 55461321 and lower; BOM 9025 SN 5549417 and lower

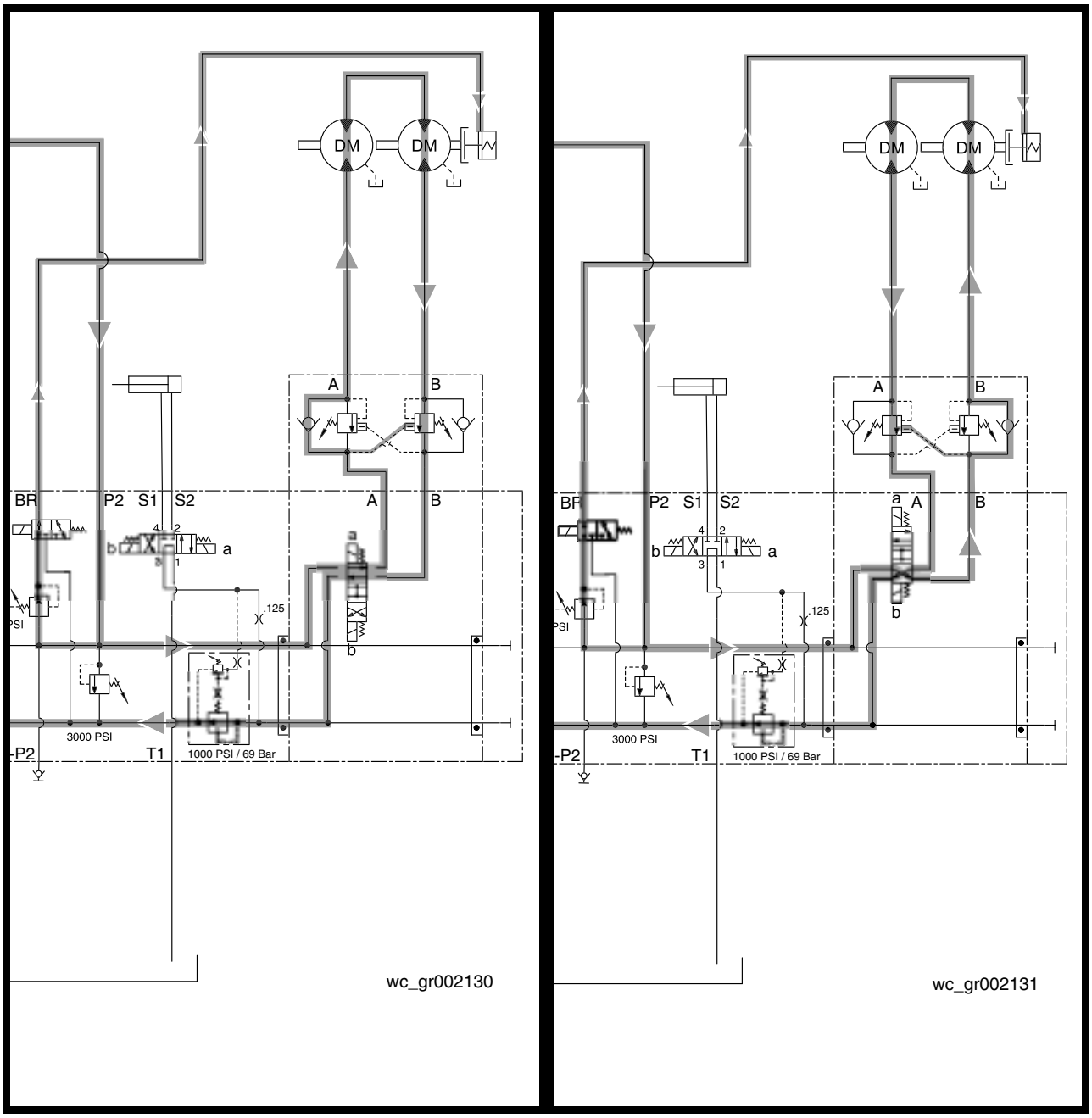

Forward **Reverse**

BOM 9026 SN 55461322 and higher; BOM 9025 SN 5549418 and higher

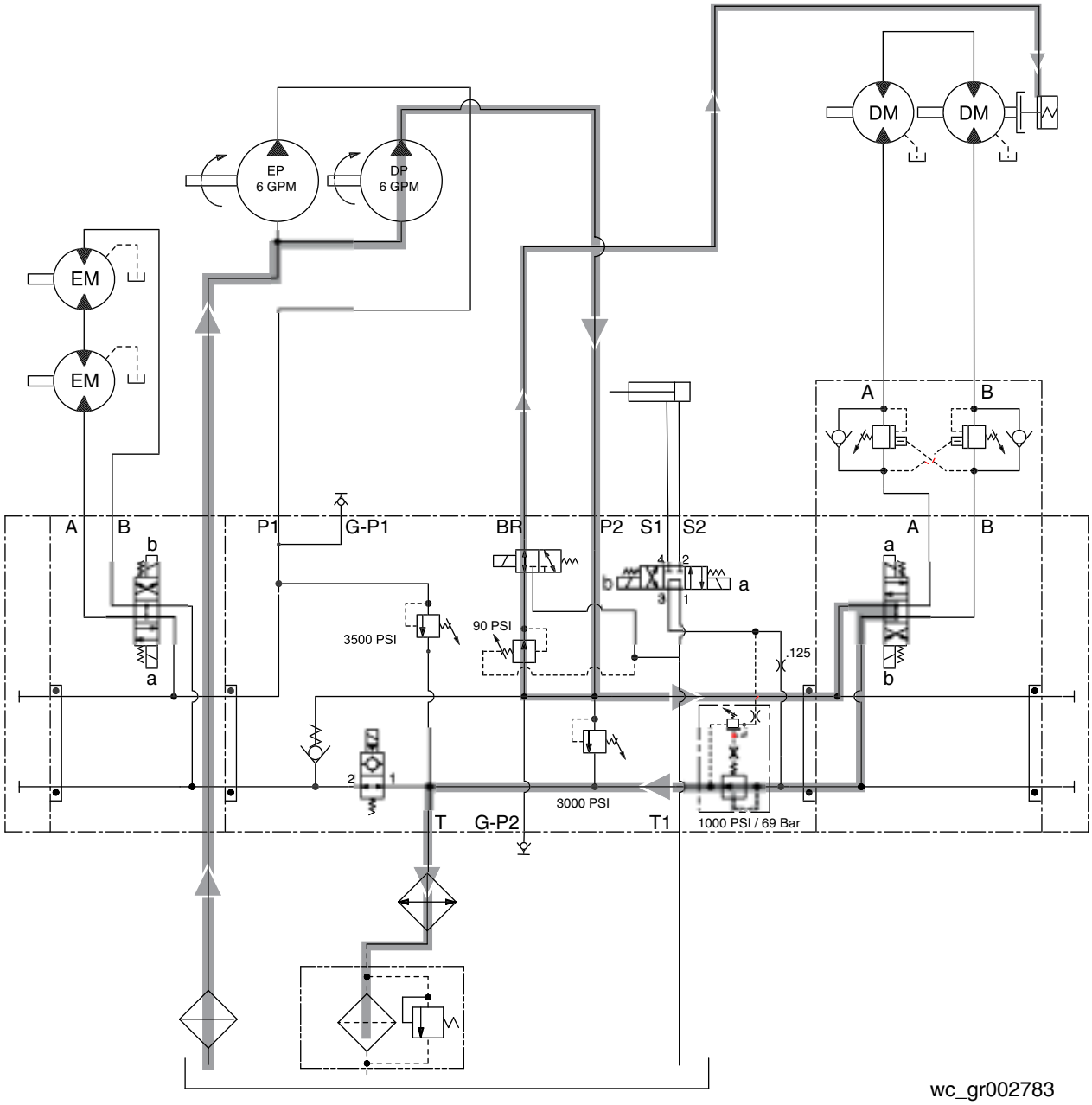

No Movement

BOM 9026 SN 55461322 and higher; BOM 9025 SN 5549418 and higher

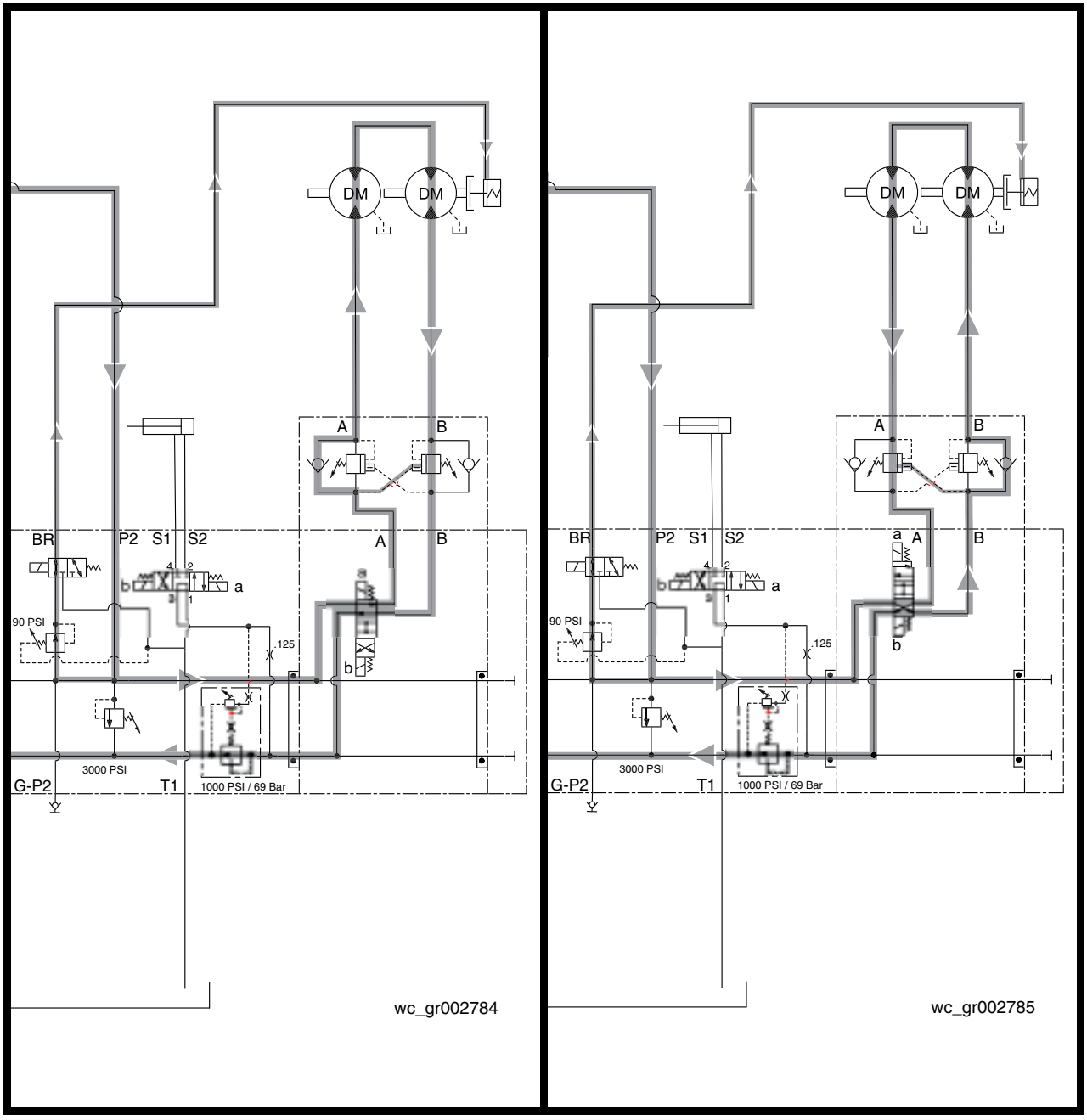

Forward **Reverse**

6.9 High-Speed Drive and Brake Circuit

BOM 9026 SN 55461321 and lower; BOM 9025 SN 5549417 and lower

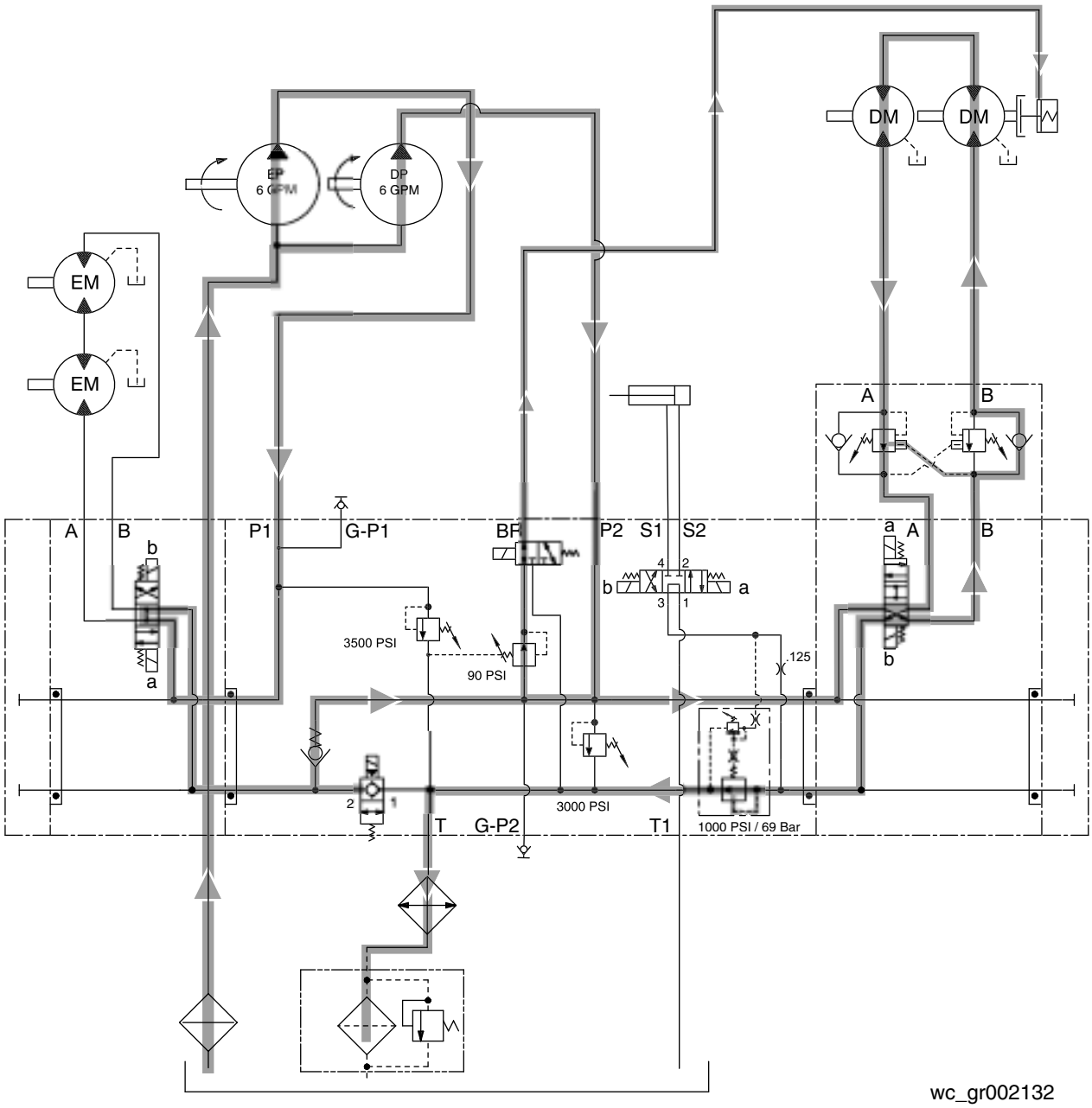

BOM 9026 SN 55461322 and higher; BOM 9025 SN 5549418 and higher

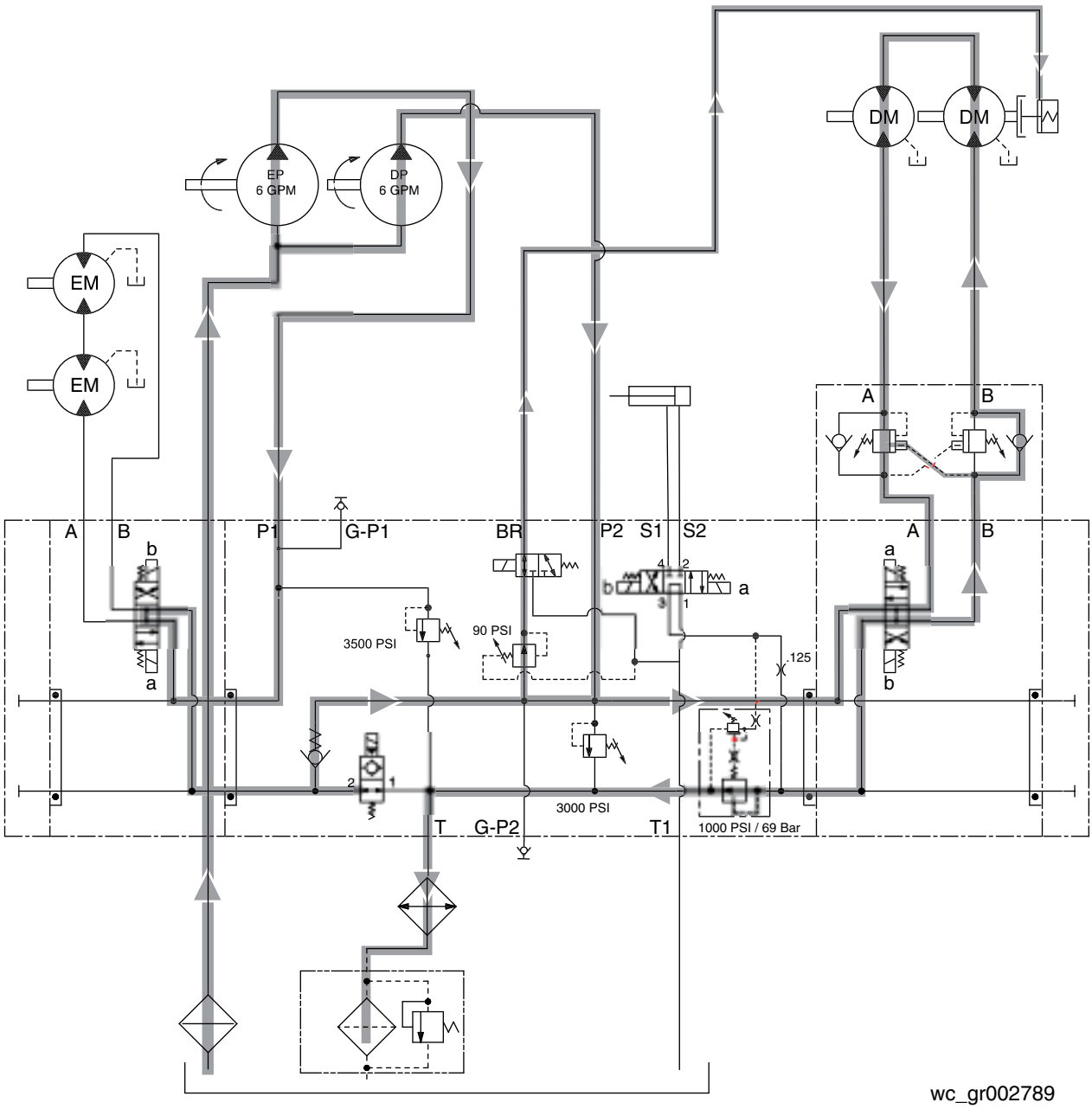

6.10 Steering Circuit

BOM 9026 SN 55461321 and lower; BOM 9025 SN 5549417 and lower

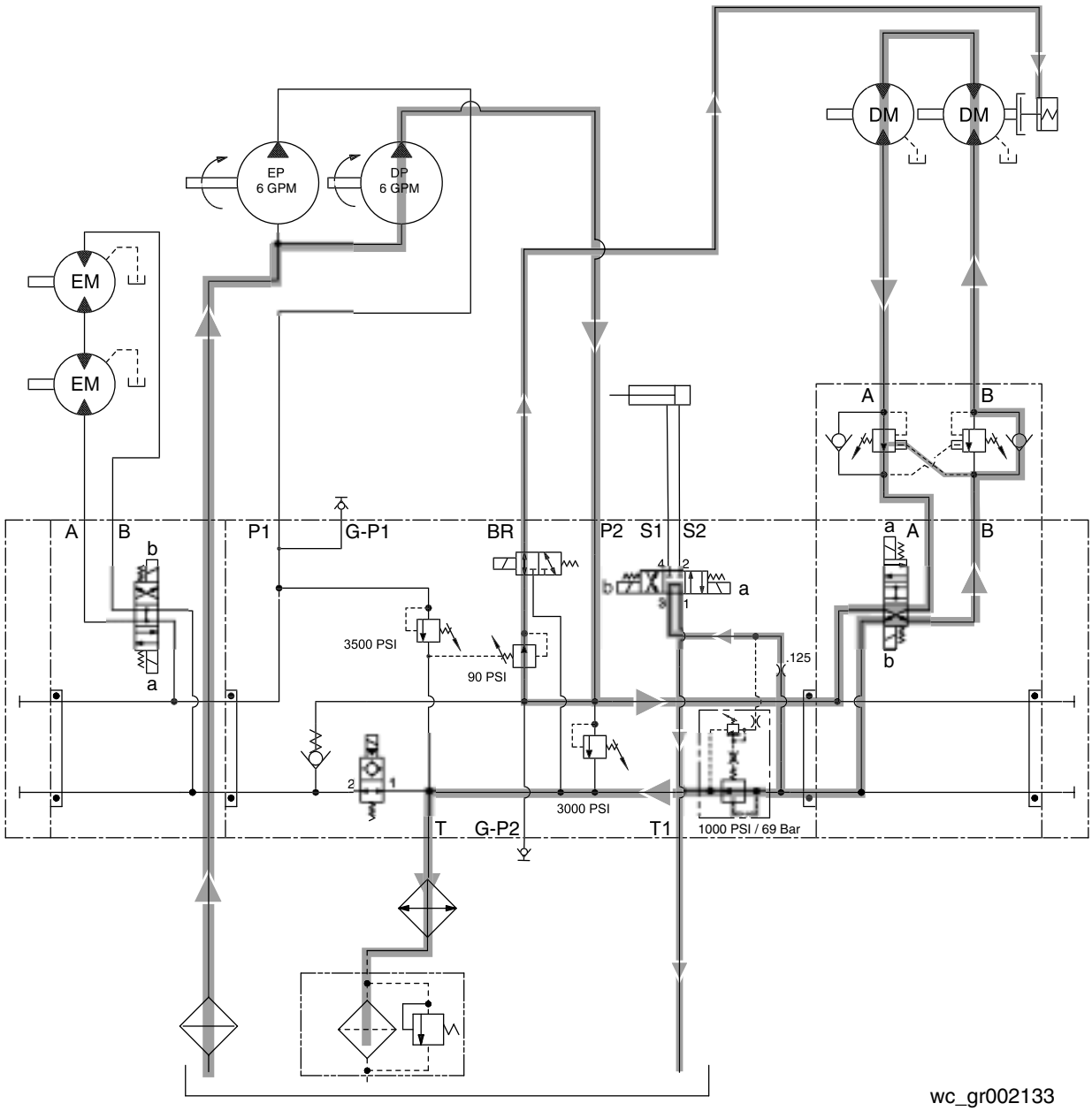

wc_gr002133

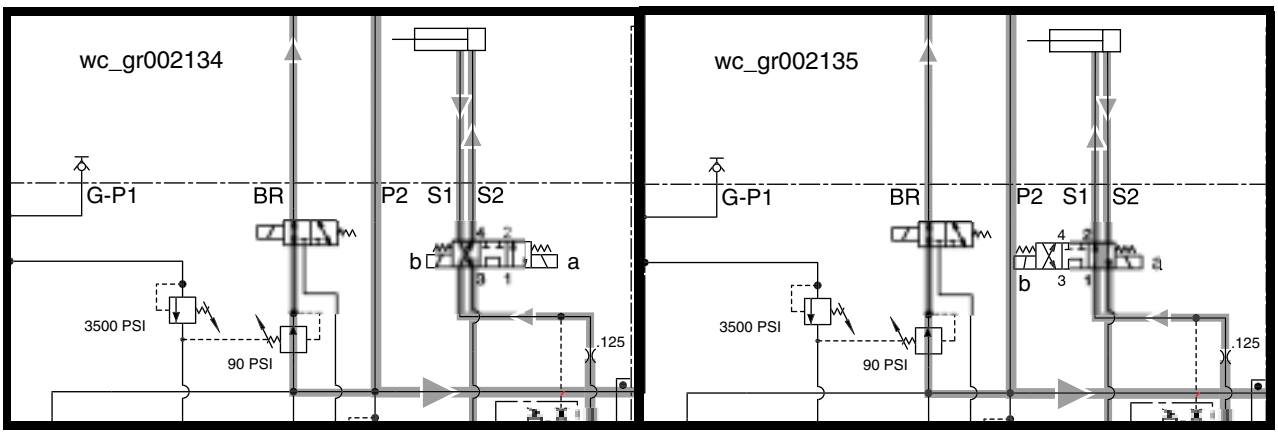

BOM 9026 SN 55461322 and higher; BOM 9025 SN 5549418 and higher

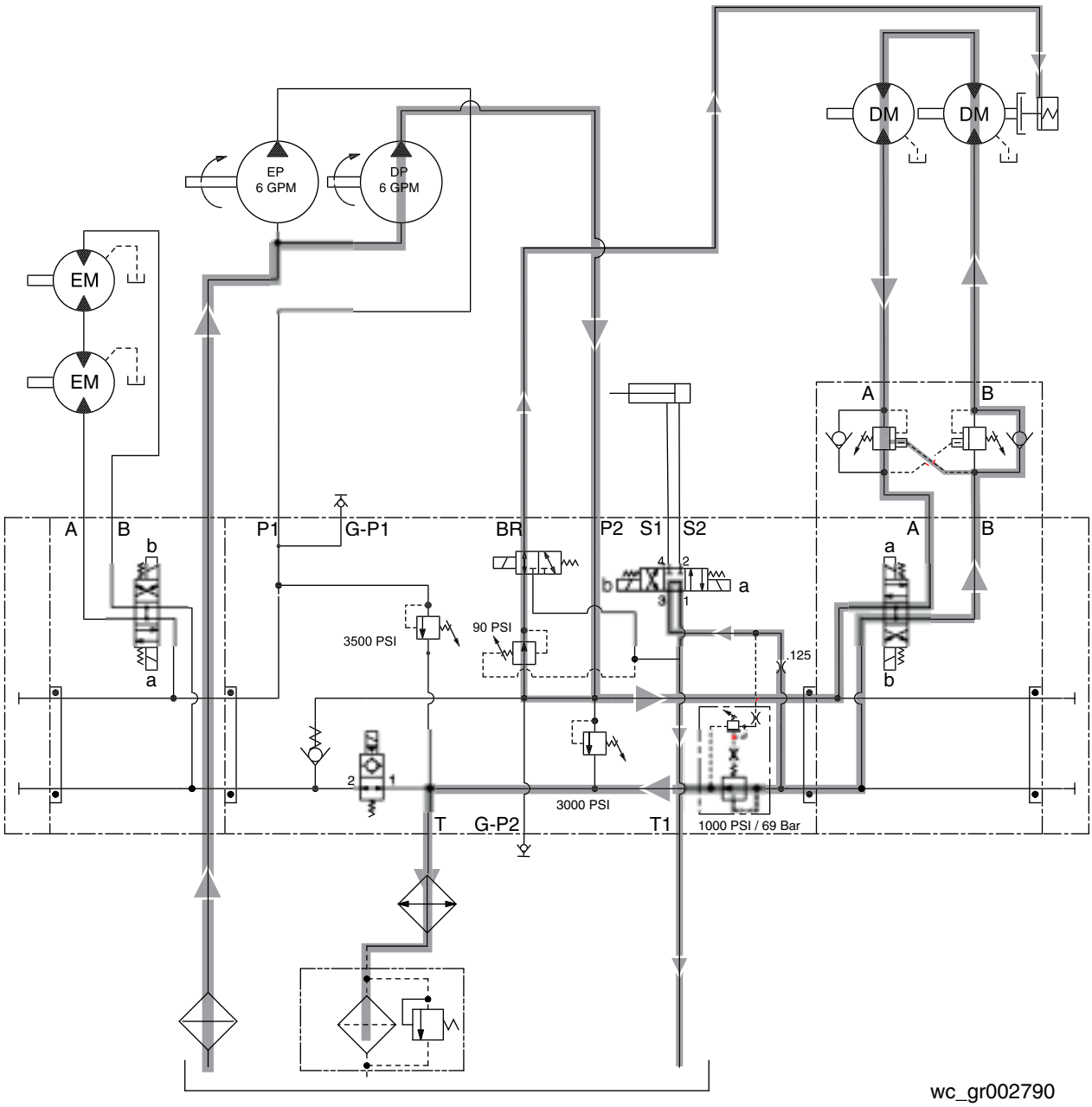

wc_gr002790

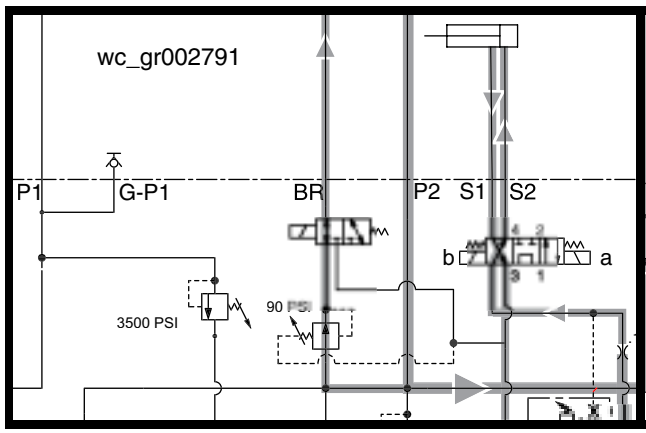

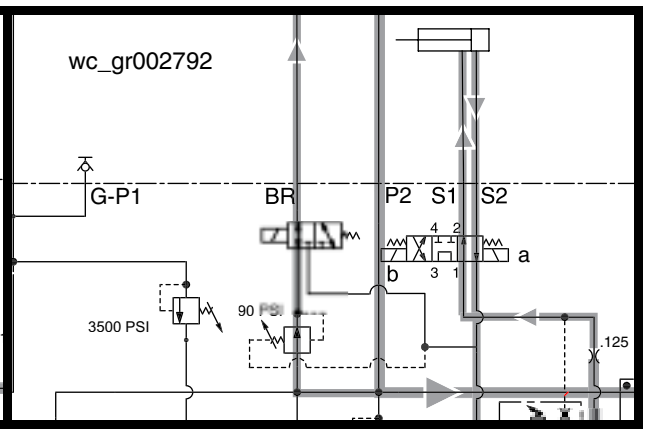

Notes

7. Hydraulic Troubleshooting

7.1 No Vibration—Flowchart 3A

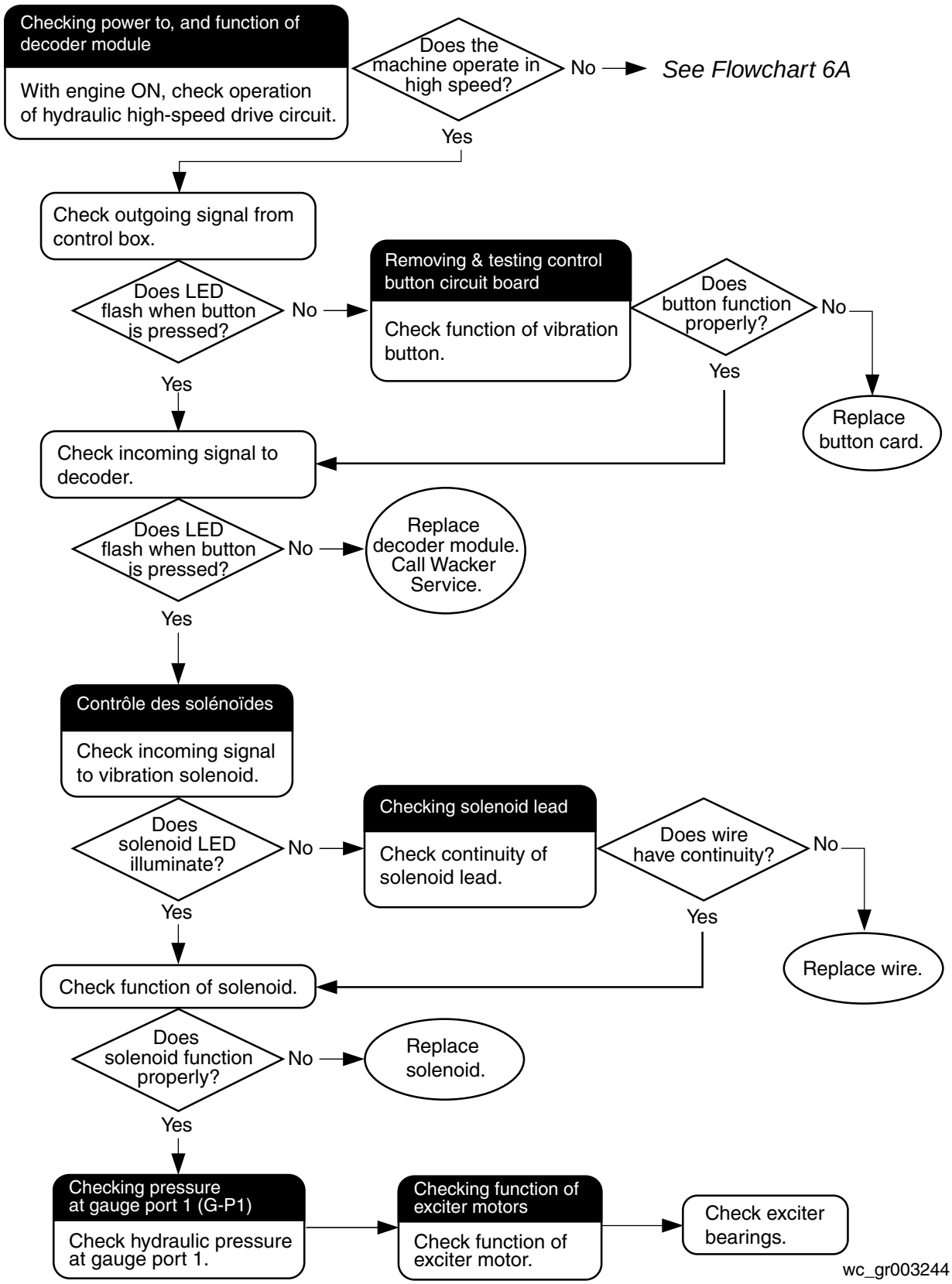

7.2 Checking Power to, and Operation of, Decoder Module

See Graphic: wc_gr002196, wc_gr0002340, and wc_gr002335

When the machine and control box are ON, for every command sent by the control box, the signal transmission indicator LED **(a)** illuminates. A corresponding LED **(b)** on the decoder module flashes three times for each signal received. An LED on the appropriate solenoid **(c)** also illuminates when power is sent to it. By observing these LEDs, one can determine if an infrared signal is being sent by the control box, received by the decoder module, and applied to the corresponding component (solenoid).

The decoder module is fed electric power by the power relay through the pink/yellow wire within the gray connector. If the decoder module is receiving power, its green LED will illuminate when receiving a signal. If the green LED does not illuminate, the decoder module is malfunctioning or it is not receiving power. To determine if the decoder module is receiving power, disconnect the grey connector from the decoder module and with the key switch in the ON position, check pin 2A **(d)** for 12V (battery voltage).

If 12V is not measured, the decoder module is not receiving electric power. Trace the wiring to the module and repair as needed.

If 12V is measured at pin 2A, reconnect the grey connector. Check connection of brown connector on the opposite side of the decoder module. Check the operation of decoder module by connecting a jumper wire between the power pin 2 and each of the pins at the trailer plug, one at a time. As you connect the jumper, observe the LED on the corresponding solenoid connector. If the LED illuminates, the decoder module is functioning. If LEDs on two or more of the solenoids do not illuminate, the decoder module is malfunctioning. Replace the decoder module.

Pin	Purpose	Pin	Purpose	Pin	Purpose
1	12Vdc input	4	Ground	7	Reverse
2	5Vdc input	5	Fuel/brake	8	Steer-right
3	Starter	6	Forward	9	Steer-left

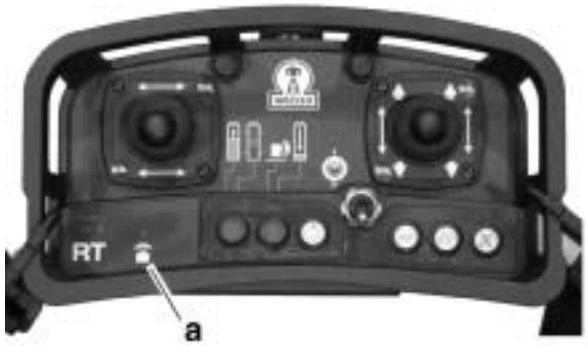

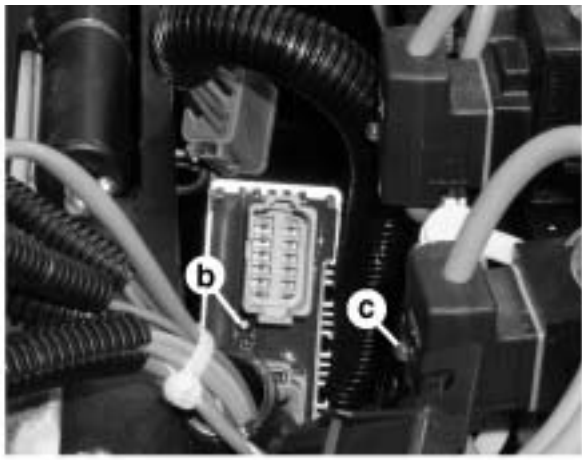

wc_gr002196



wc_gr002340

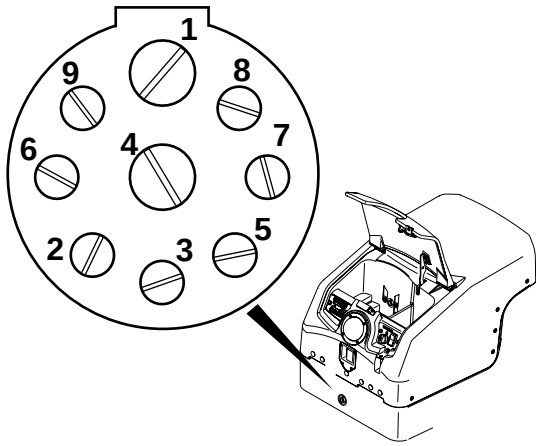

wc_gr002335

7.3 Replacing Decoder Module

See Graphic: wc_gr002342

Removal:

7.3.1 Remove the four screws securing the decoder module to the machine frame.

7.3.2 Rotate the decoder module to aid in removal of the brown connector plug and remove the brown connector plug **(a)**.

7.3.3 Cut the two wire ties **(b)** securing the wiring harness.

7.3.4 Remove the green **(c)** and the grey **(d)** connector plugs.

7.3.5 Remove the two screws **(e)** (one also includes ground) from the valve block securing the block to the block bracket.

7.3.6 Remove the connectors **(f)** from the left and right turn solenoid valves.

7.3.7 Pull the decoder module **(g)** from the machine.

Installation:

7.3.8 Slide the decoder module back into position and connect the green **(c)** and grey connectors **(d)**.

7.3.9 Re-install the two screws securing the valve block to its bracket **(e)**.

7.3.10 Reconnect the brown connector **(a)**.

7.3.11 Secure the decoder module to the machine frame with four screws.

7.3.12 Secure the wiring harness with two new wire ties **(b)**.

7.3.13 Reinstall the left and right solenoid valve connectors **(f)**.

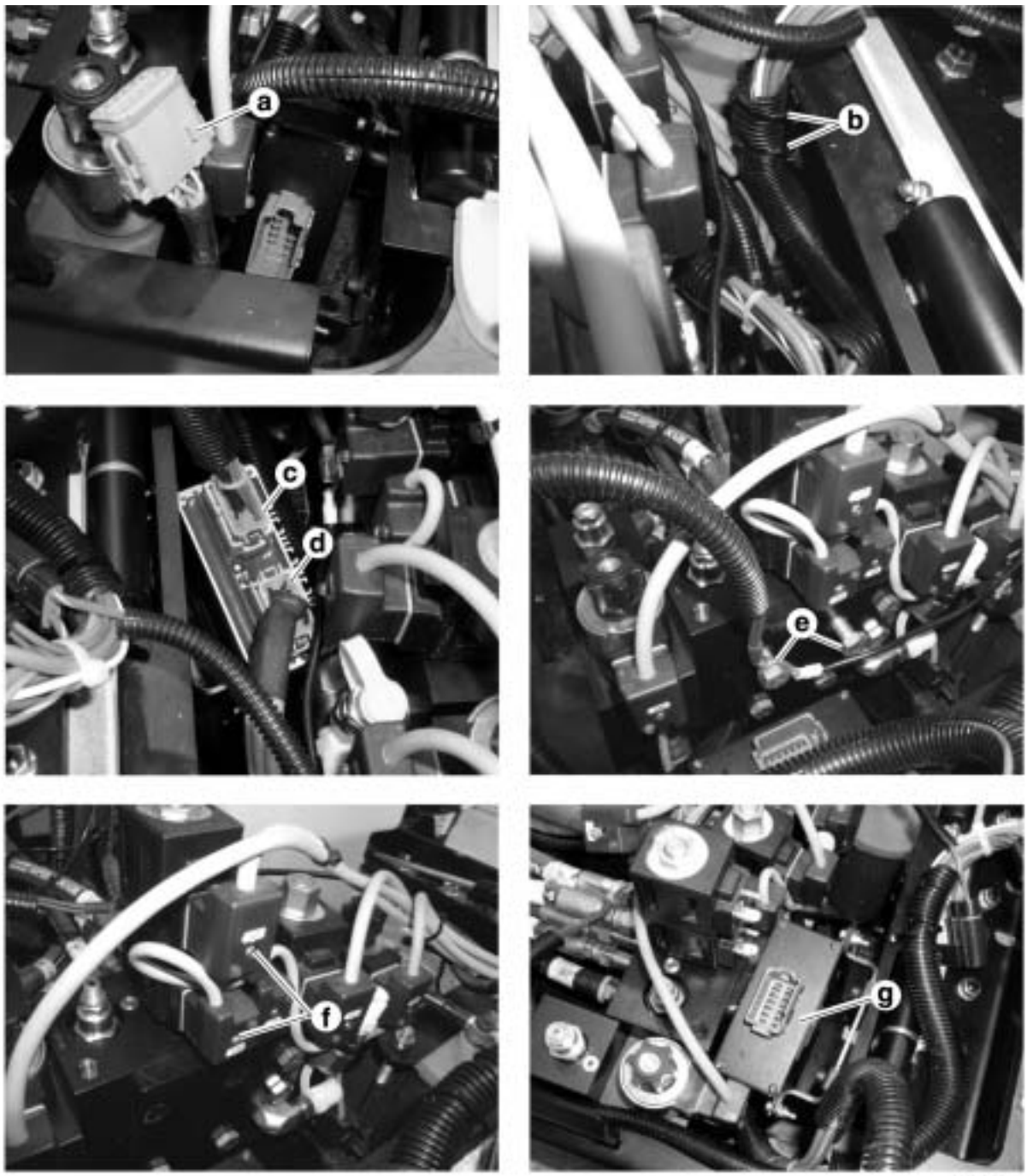

wc_gr002342

7.4 Checking Solenoid Lead

See Graphic: wc_gr002197

To check any solenoid lead for continuity:

7.4.1 Disconnect the solenoid lead connector **(a)** (green connector) from the decoder module.

7.4.2 Remove the screw securing the LED-end **(b)** of the solenoid lead to the solenoid valve.

7.4.3 Trace the wires back through the solenoid lead and test the appropriate wires between the connector and the LED-end of the solenoid lead.

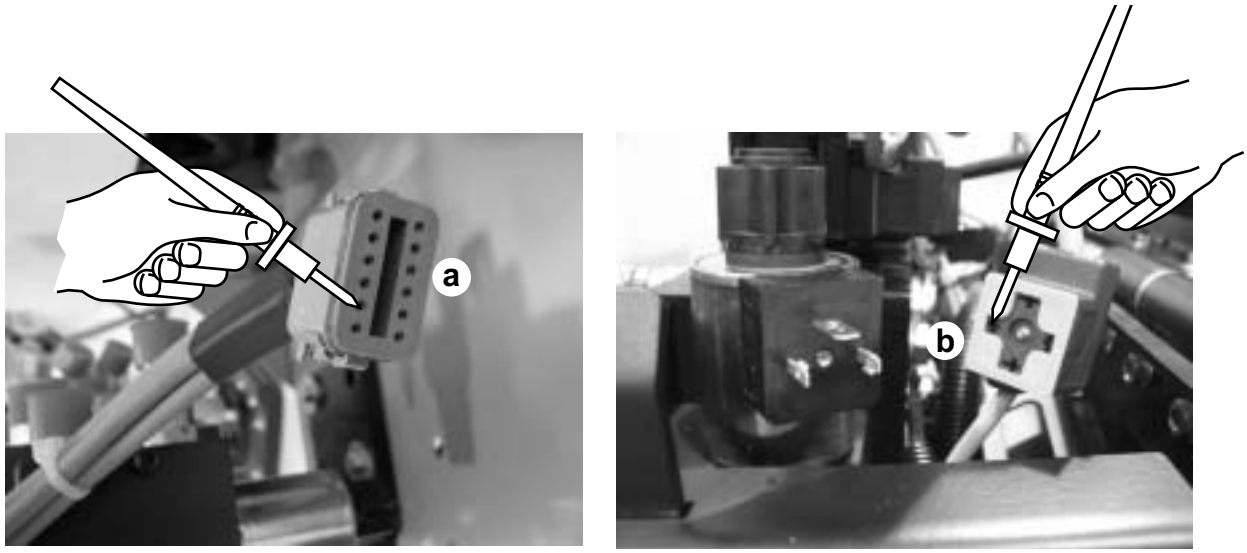

wc_gr002197

7.5 Checking Solenoids

To test the hydraulic valve solenoids:

7.5.1 The high and low vibration solenoids as well as the reverse and forward solenoids are identical. Replace a suspect coil with a known-to-be-working coil. If the circuit being tested then works, replace the suspect coil.

Note: *The same test can be carried out between the left and right steering coils because they are identical.*

7.5.2 Measure resistance in the coils. All solenoid coils should measure between 6.5 and 6.7 Ohms cold; 7.0–7.5 Ohms warm.

7.6 Replacing Solenoid

See Graphic: wc_gr002199

When replacing a valve, always have the replacement valve ready to install as soon as the failed valve is removed. This will minimize the time the hydraulic system is open to contamination.

Removal:

7.6.1 Remove the screw **(a)** securing the LED connector lead and remove the lead.

7.6.2 Remove the retaining nut **(b)** and washer.

7.6.3 Remove the coil **(c)** from the valve.

7.6.4 Remove the valve **(d)** from the manifold block.

Installation:

7.6.5 Install the valve **(d)** into the manifold block. Do not overtighten the valve.

7.6.6 Slide the coil **(c)** over the valve.

7.6.7 Position the coil so that the LED connector can be attached, and secure the LED connector to the coil.

7.6.8 Secure the coil with the washer and retaining nut **(b)** .

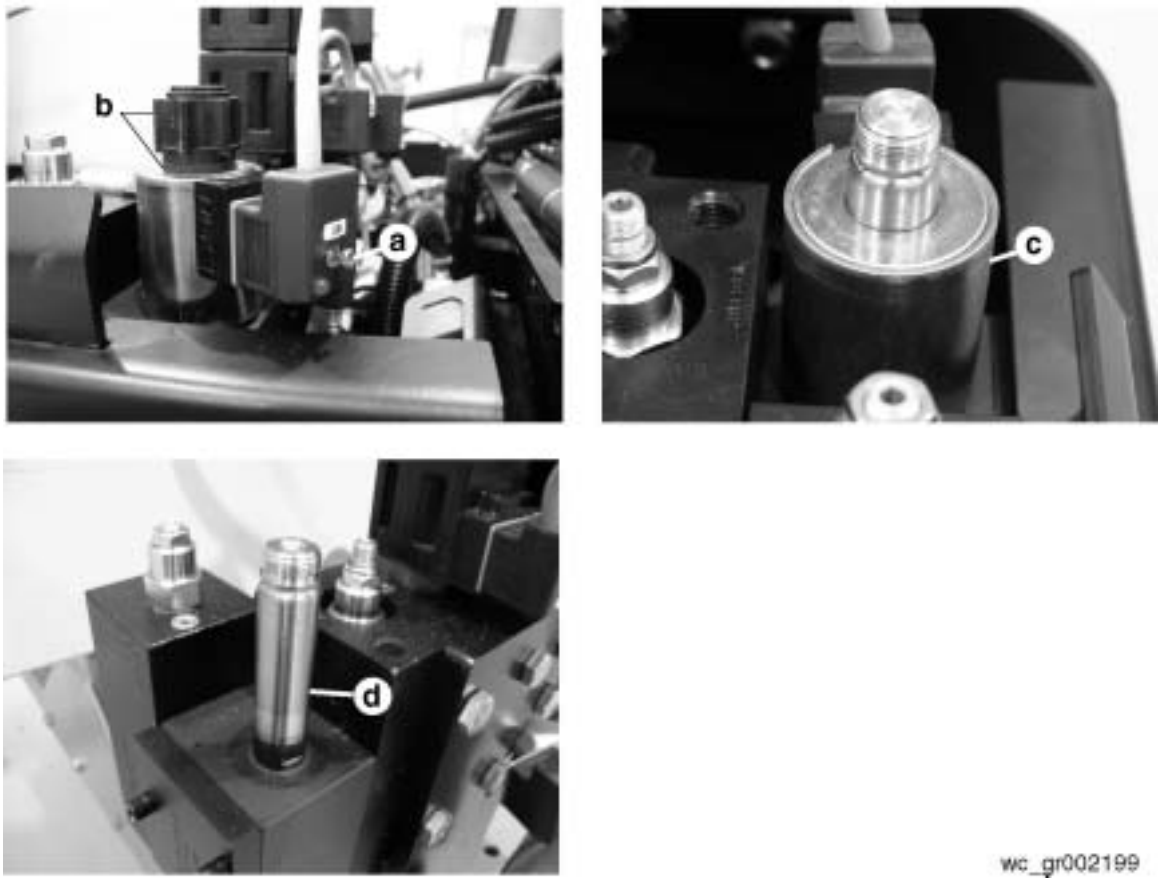

7.7 Checking Pressure at Gauge Port 1 (G-P1)

See Graphic: wc_gr002358

7.7.1 Using a 5000 psi-rated gauge, check pressure at G-P1 (top fitting, angled upward, on back side of valve block). The pressure should spike at 3500 psi upon startup of the exciter motors, then settle in at normal operating pressure of 1200 psi for low vibration and 1500 psi for high vibration.

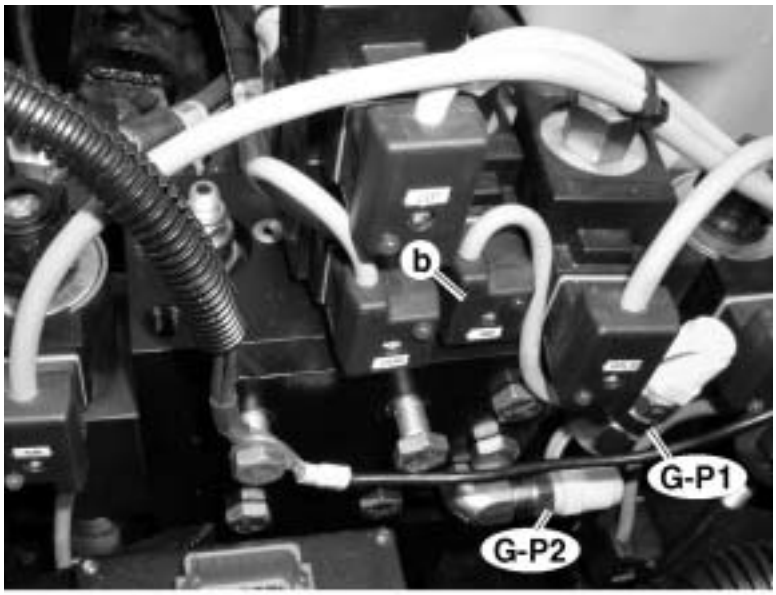

wc_gr002358

7.8 Checking Function of Exciter Motors

See Graphic: wc_gr002357

7.8.1 Have at the ready two 5-gallon pails. Remove exciter motor drain lines **(a & b)** at tank. Plug tank fittings as soon as drain lines are disconnected to avoid contaminating the hydraulic system. Place the exciter motor case drain lines, one each, into the 5-gallon pails.

7.8.2 Start the engine and allow the hydraulic oil to warm up for several minutes.

7.8.3 Turn on low vibration and observe the flow from the exciter motor case drain lines. Turn on high vibration and observe the flow from the exciter motor case drain lines.

7.8.4 If you observe more flow from one of the case drain lines than the other, the motor with the greatest flow is bad; replace it. If you observe a substantial flow from both case drain lines, both motors are bad. Replace both motors.

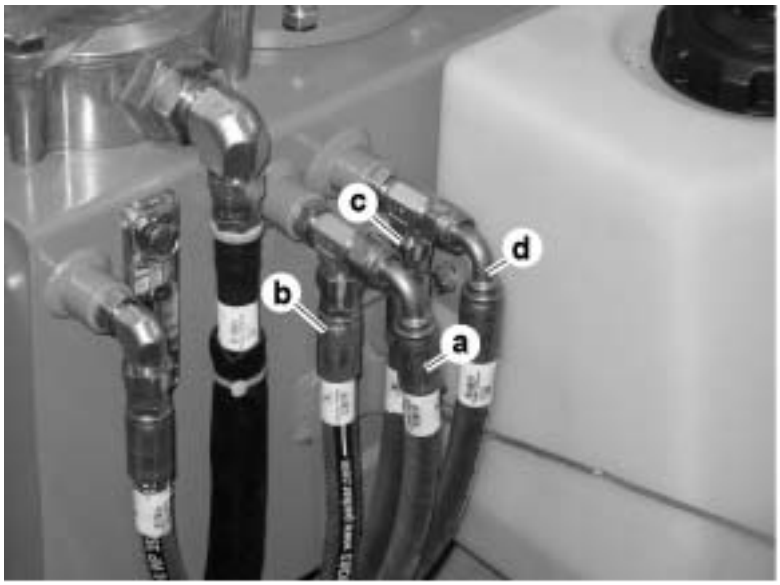

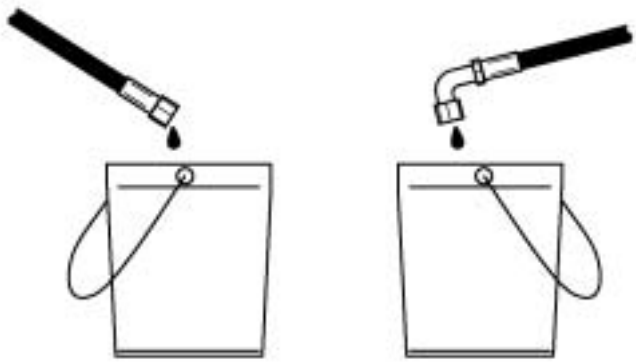

wc_gr002357

7.9 No Steering Troubleshooting—Flowchart 4A

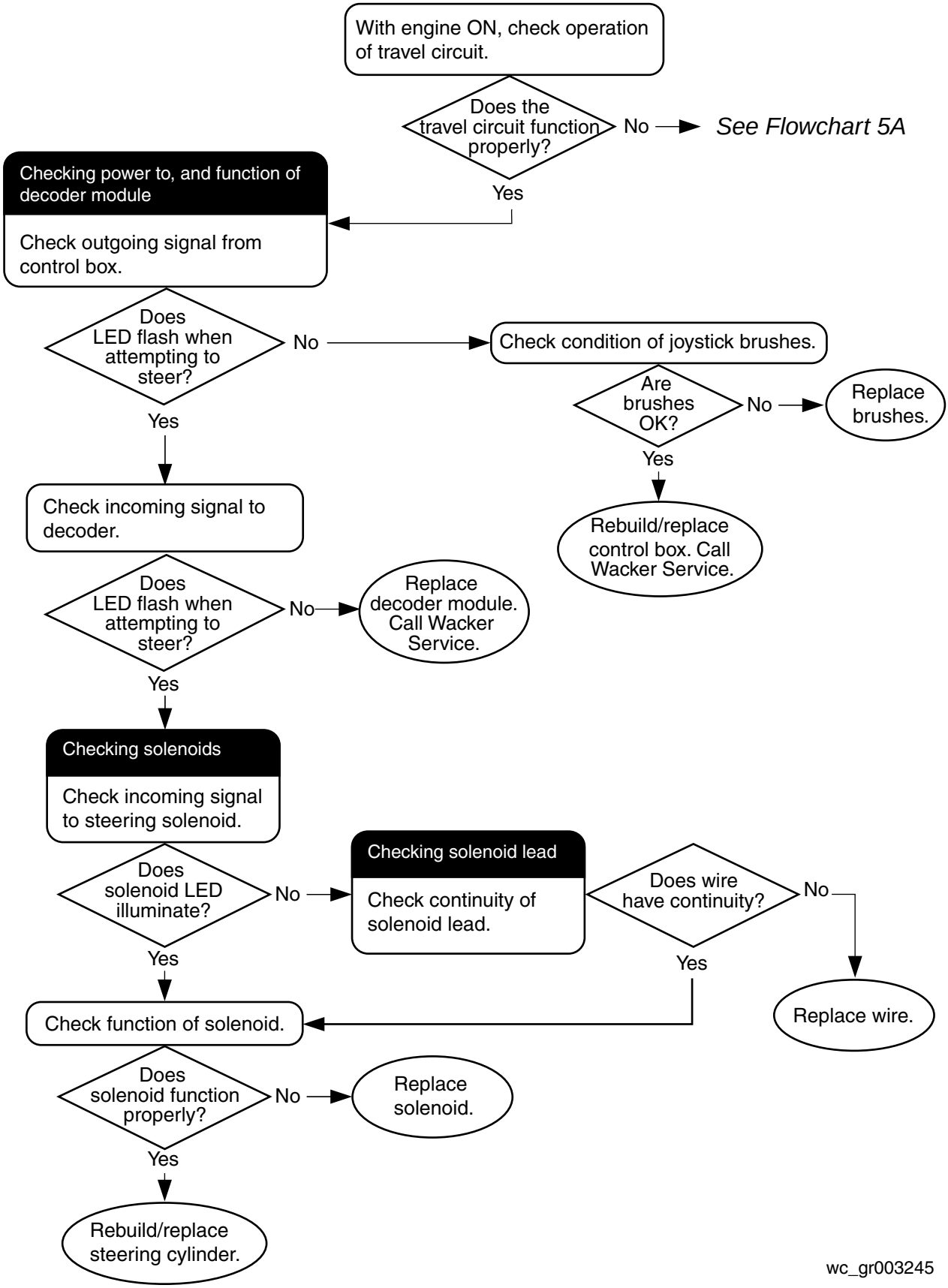

7.10 No Travel Troubleshooting—Flowchart 5A

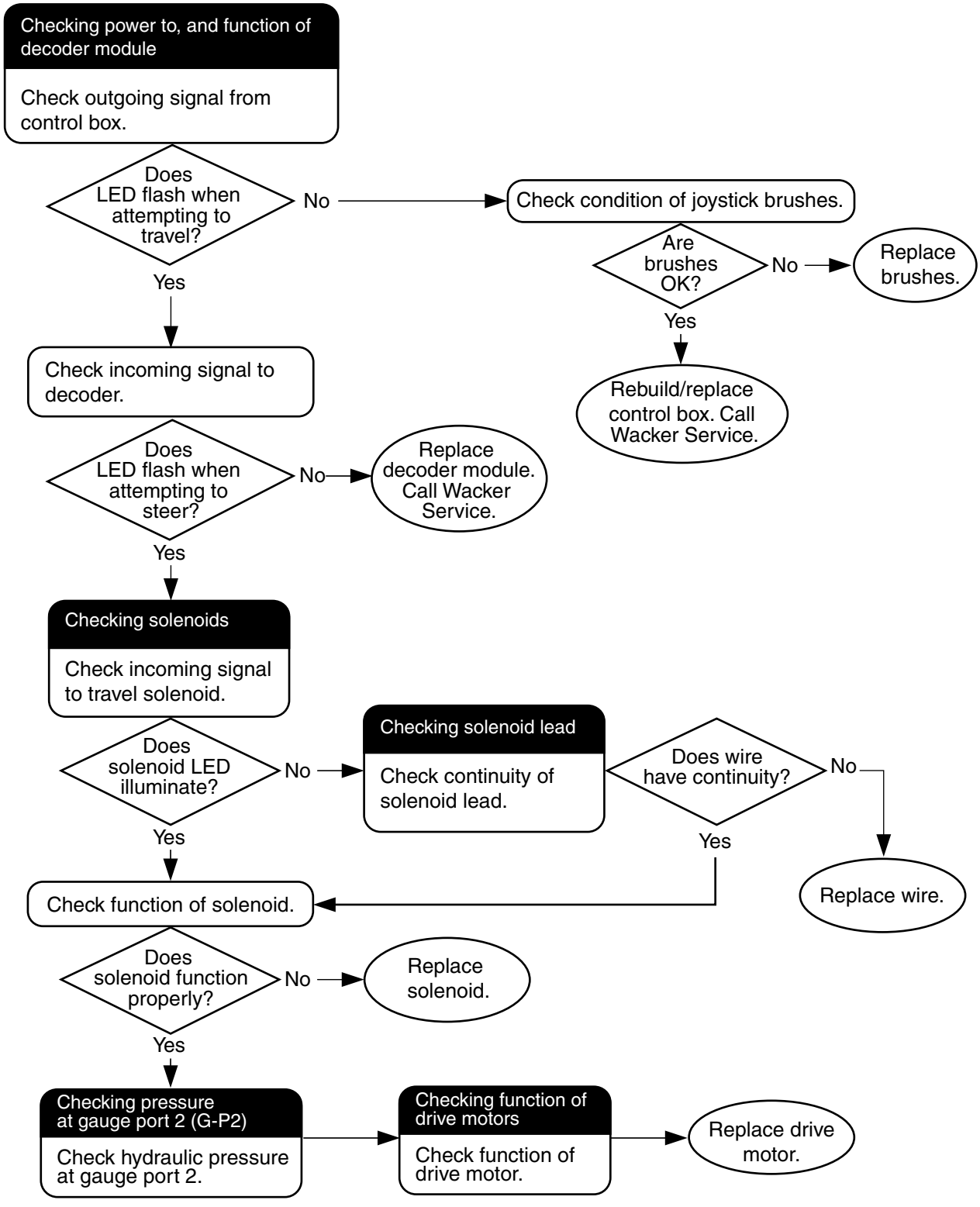

wc_gr003246

7.11 Checking Pressure at Gauge Port 2 (G-P2)

See Graphic: wc_gr002358

7.11.1 Using a 5000 psi-rated gauge, check pressure at G-P2 (bottom fitting on back side of valve block). The pressure should spike at 3000 psi upon startup of the drive motors, then settle in at normal operating pressure of 1200 psi for low-speed travel and 1500 psi for high-speed travel.

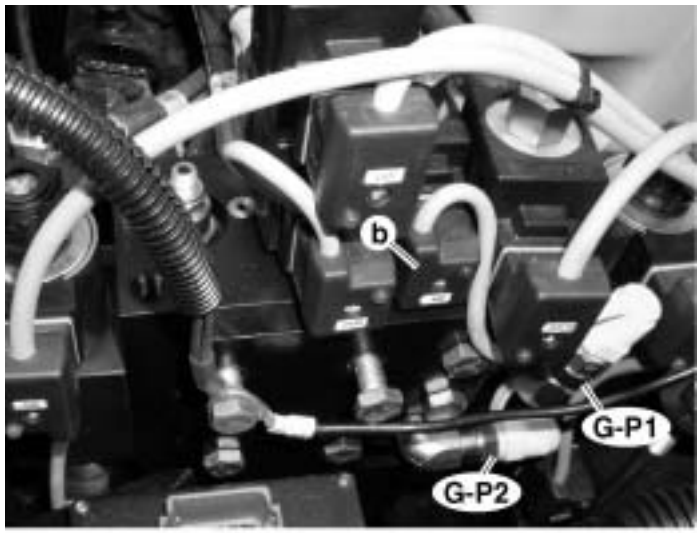

wc_gr002358

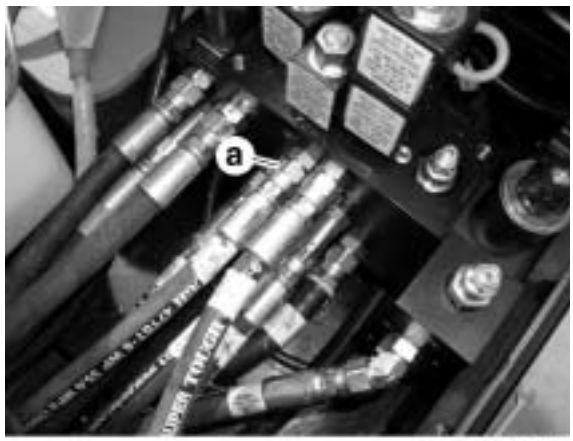

wc_gr002379

7.12 Checking Function of Brake

See Graphic: wc_gr002379 and wc_gr002358

7.12.1 On item 9025 serial number 5549418 and above, also on item 9026 serial number 5546132 and above, disconnect the brake solenoid **(b)**. On all other machines, disconnect the brake hose **(a)** at the manifold. Plug the fitting at the manifold and the hose to prevent contamination of the hydraulic system.

7.12.2 Start the machine and attempt to drive forward, then reverse. A working brake will prevent movement of the machine in either direction.

7.12.3 If the machine drives through the brake, the mechanical activation of the brake is faulty; rebuild the brake. See Section *Rebuilding Brake.*

7.13 Checking Function of Drive Motors

See Graphic: wc_gr002357

7.13.1 Remove brake hose at manifold and plug it. See Section *Checking Function of Brake.*

7.13.2 Have at the ready two 5-gallon pails. Remove drive motor drain lines **(c & d)** at tank. Plug tank fittings as soon as drain lines are disconnected to avoid contaminating the hydraulic system. Place the drive motor case drain lines, one each, into the 5-gallon pails.

7.13.3 Start the engine and allow the hydraulic oil to warm up for several minutes.

7.13.4 Turn on forward travel and observe the flow from the drive motor case drain lines. Turn on reverse travel and observe the flow from the drive motor case drain lines.

7.13.5 If you observe more flow from one of the case drain lines than the other, the motor with the greatest flow is bad; replace it. If you observe a substantial flow from both case drain lines, both motors are bad. Replace both motors.

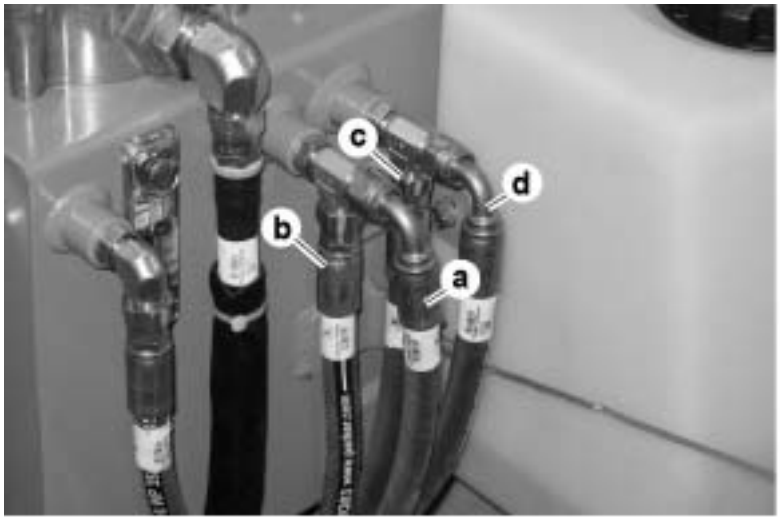

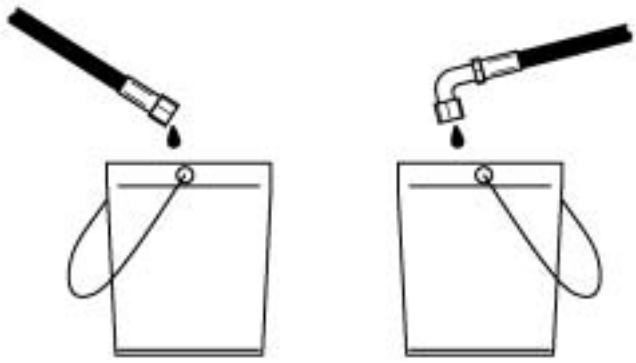

wc_gr002357

7.14 No High Speed Travel Troubleshooting—Flowchart 6A

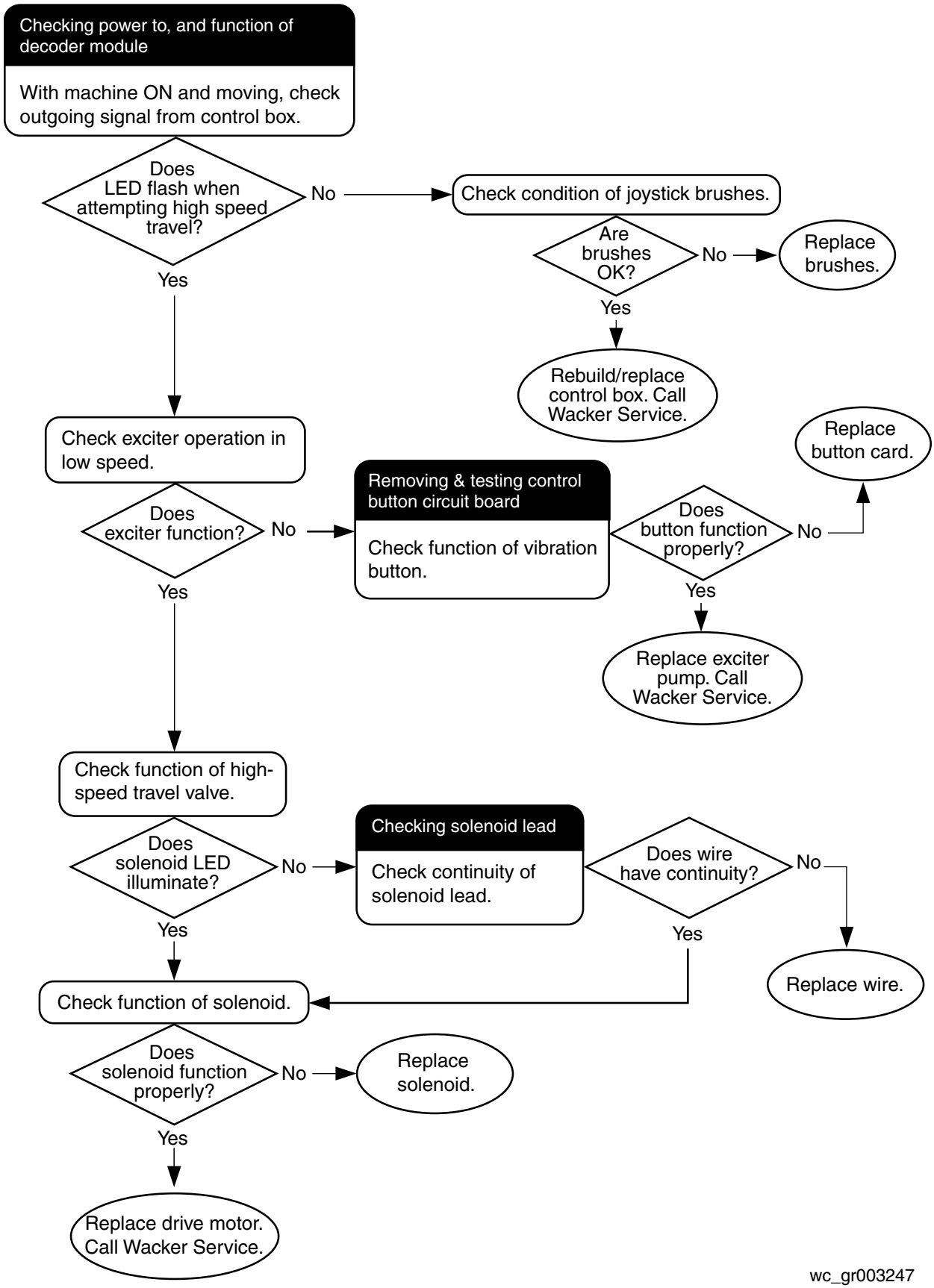

wc_gr003247

8. Disassembly/Reassembly Procedures

8.1 Tools

Because all possible problems encountered while repairing the equipment cannot be anticipated, it is up to the mechanic to use common sense and good judgement in tool selection.

The use of any special tools is recommended only for those operations where the use of conventional tools proves inadequate.

Before substituting another tool or procedure, you should be satisfied that neither personal injury nor damage to the component will result.

8.2 Ordering Parts

The repair procedures contained in this manual do not include part numbers. For parts replacement information, refer to the Parts Book originally supplied with the unit.

If the original Parts Book has been lost, a replacement may be ordered from Wacker Corporation. When ordering a replacement Parts Book, please list the model number, item number, revision level, and serial number of the machine. Parts Books are also available on the Wacker Corporation Web site. See www.wackergroup.com. Enter the site as a visitor.

8.3 Reference Numbers ( )

Repair procedures contain reference numbers enclosed in parentheses ( ). These numbers refer to the item numbers shown on the assembly drawings and other detailed drawings. They are included to aid the mechanic in identifying parts and assembling components.

8.4 Weight Block

See Graphic: wc_gr000843

The weight block symbol gives an approximate weight measurement to aid the mechanic when lifting/hoisting larger components.



wc_gr000843

8.5 Articulated Joint

See Graphic: wc_gr002346

Disassembly:

8.5.1 Position the machine so that the two halves are not straight in-line with each other; but rather, are off center by approximately 5°.

8.5.2 Support the two machine halves with jack screws **(a)**.

8.5.3 Remove the nut **(b)** scuring the pivot pin **(c)** and remove the pivot pin.

8.5.4 Remove the four screws **(d)** securing the bearing bracket **(e)** and remove the bearing bracket.

8.5.5 Using an Arbor press, press the bearing **(f)** from the bearing bracket.

8.5.6 If replacing only the bearing, continue with step 10. If replacing the entire articulated joint, remove the four screws **(g)** securing the pivot block **(h)** and remove the pivot block.

8.5.7 If replacing screws, place a floor jack or third screw jack underneath the drum support. Remove the four screws **(i)** securing the inside shockmounts—there are two on the left and two on the right hand side of the machine. Using the jack, jack up the drum support just enough to lift the shockmount boss out of the way to remove the screws.

Reassembly:

8.5.8 Using blue Loctite 243 or equivalent on the four screws **(i)**, secure the shockmounts to the frame. Torque screws to 120 Nm (88 ft.lbs.)

8.5.9 Slide the pivot block **(h)** into the frame and secure it with four screws **(g)**. Use blue Loctite 243 or equivalent on screws and torque to 120 Nm (88 ft.lbs.)

8.5.10 Using an Arbor press, press the replacement bearing **(f)** into the bearing bracket **(e)**, marking-side in first. Press the bearing down until it seats on the shoulder of the bearing bracket.

8.5.11 Slide the bearing bracket and washer **(j)** into the frame and secure the bearing bracket to the frame with four screws **(d)**. Use blue Loctite 243 or equivalent on screws and torque to 120 Nm (88 ft.lbs.)

8.5.12 Insert pivot pin **(c)** through pivot block **(h)** and bearing bracket. Secure the pin with M24 nut **(b)**.

8.5.13 Grease bearing with Shell Alvania #2 or UNIREX #2 grease or equivalent.

8.5.14 Repeat procedure for upper portion of joint.

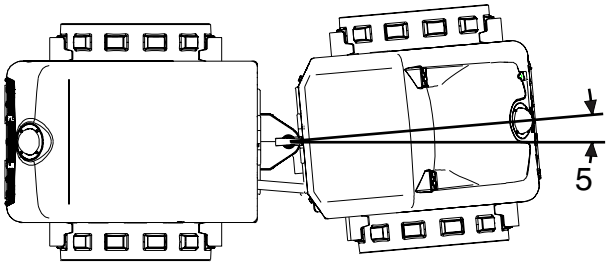

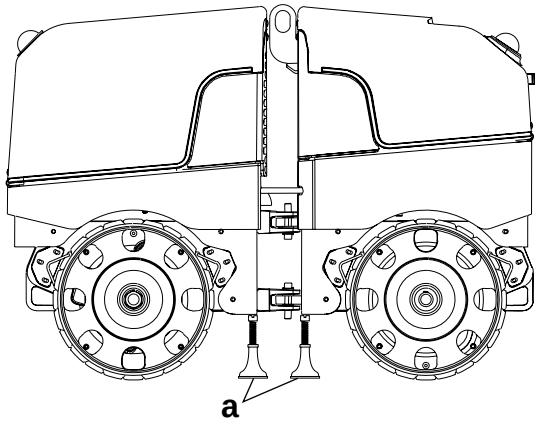

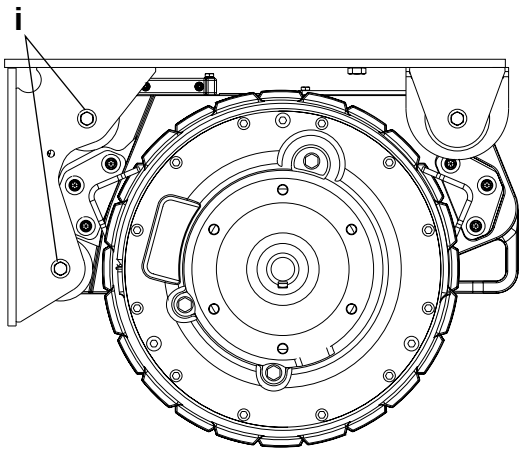

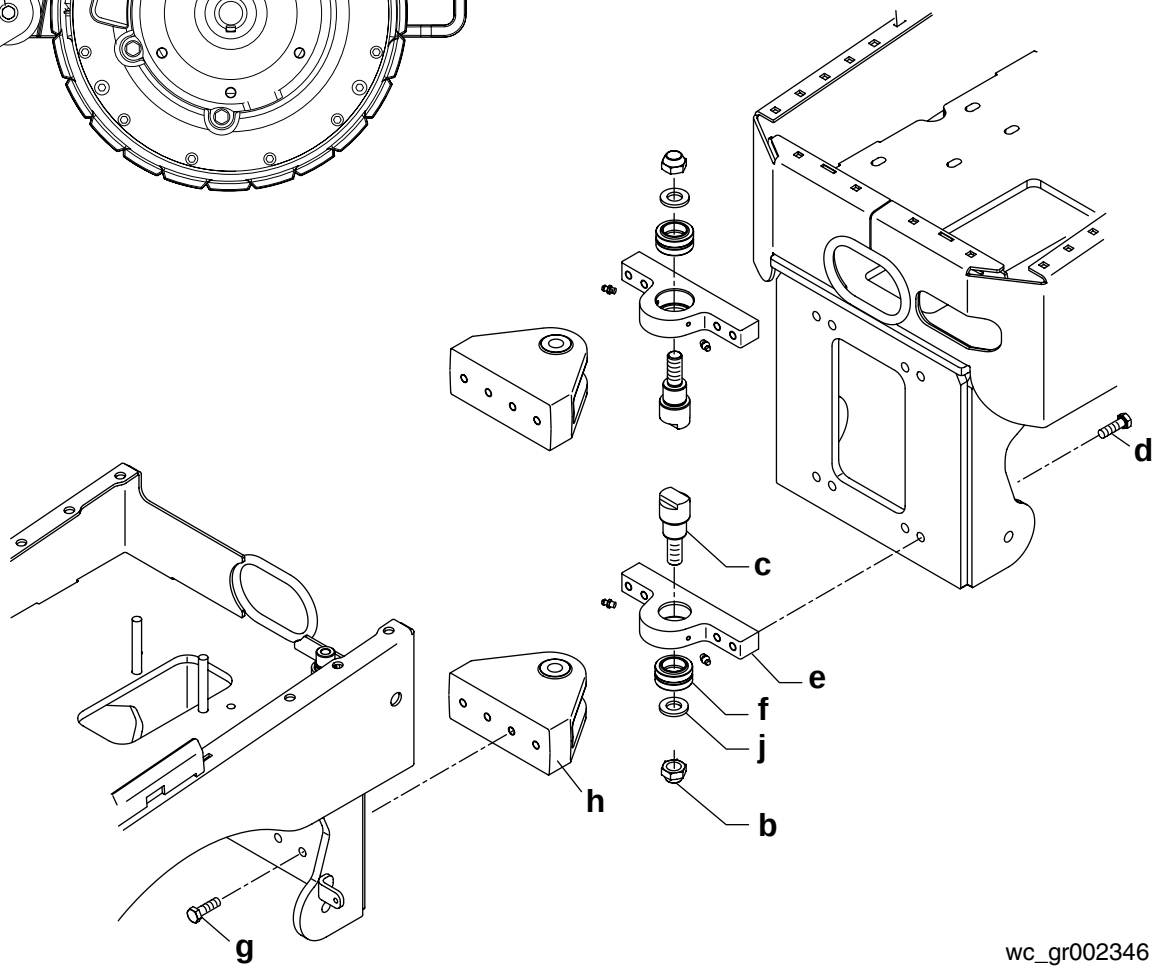

wc_gr002346

8.6 Drum Support Exploded View

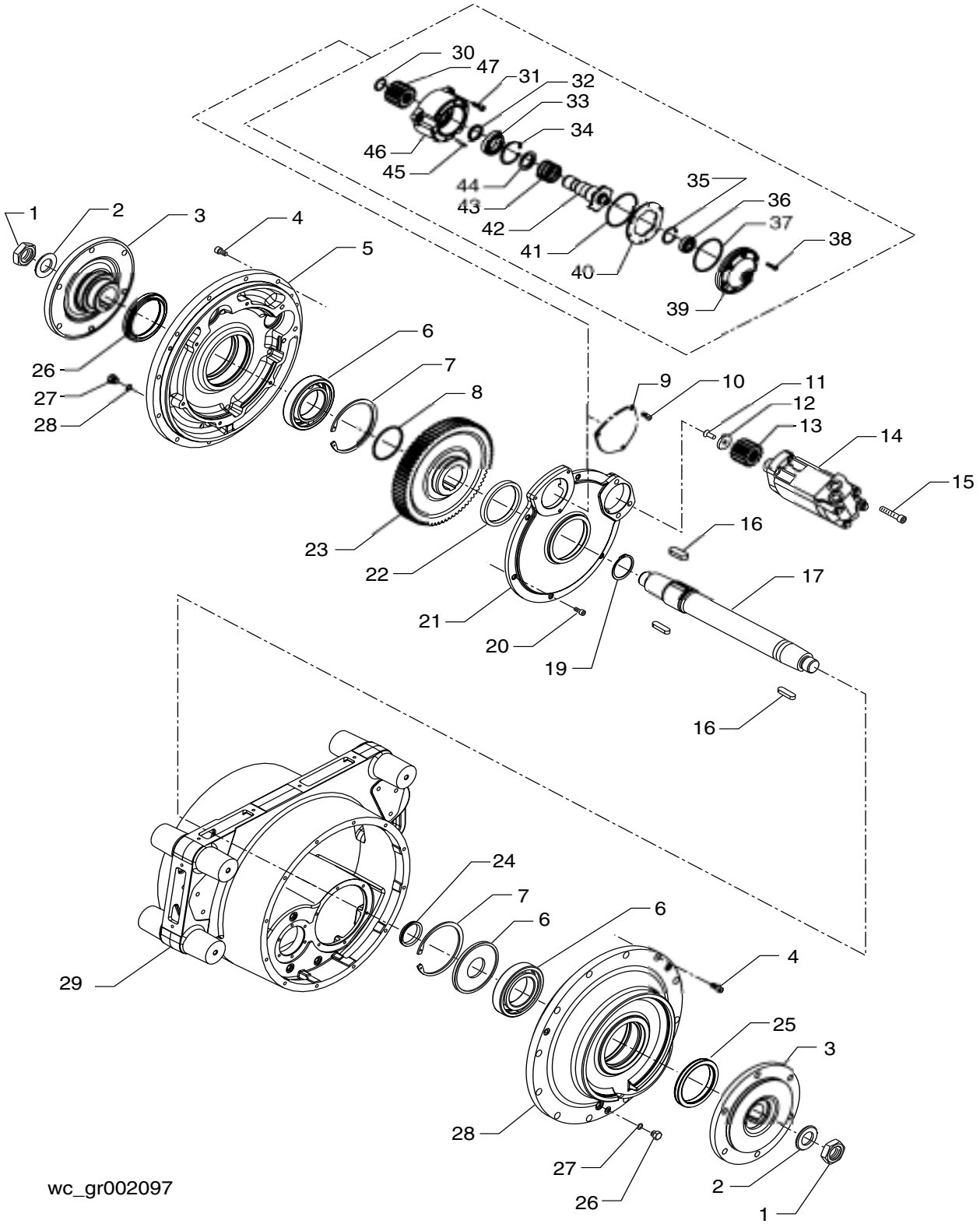

8.7 Drum Support Components

See graphic: wc_gr002097

Ref.	Description	Ref.	Description
1	2-1/8” nut	25	Seal
2	Washer	26	9/16-18 plug
3	Drum hub	27	O-Ring
4	M10 x 20 screw	28	Cover
5	Cover	29	Drum support
6	Roller bearing	30	Retaining ring
7	Retaining ring	31	M8 x 25 screw
8	O-Ring	32	Shaft seal
9	Plate	33	Ball bearing
10	M8 x 16 screw	34	Retaining ring
11	3/8-16 x 1 screw	35	Retaining ring
12	Washer	36	Ball bearing
13	Pinion gear	37	O-Ring
14	Drive motor	38	Screw
15	M12 x 60 screw	39	Cover
16	Key	40	Plate
17	Drive shaft	41	O-Ring
18	Key	42	Shaft
19	Retaining ring	43	Spring
20	M8 x 20 screw	44	Ring
21	Cover	45	Roll pin
22	Shaft seal	46	Housing
23	Pinion gear	47	Pinion gear
24	Retaining ring	--	--

8.8 Identifying Drum Supports

See graphic: wc_gr002053

8.8.1 The rear drum **(1)** contains a brake **(a),** a drive motor **(b)**, an exciter assembly **(c)** with exciter motor **(d)**.

8.8.2 The front drum **(2)** contains a drive motor **(b)** and an exciter assembly **(c)** with exciter motor **(d)**.

8.8.3 When disassembling the drum support, always start on the exciter side of the drum—it can be identified by the bulge **(e)** in the casting.

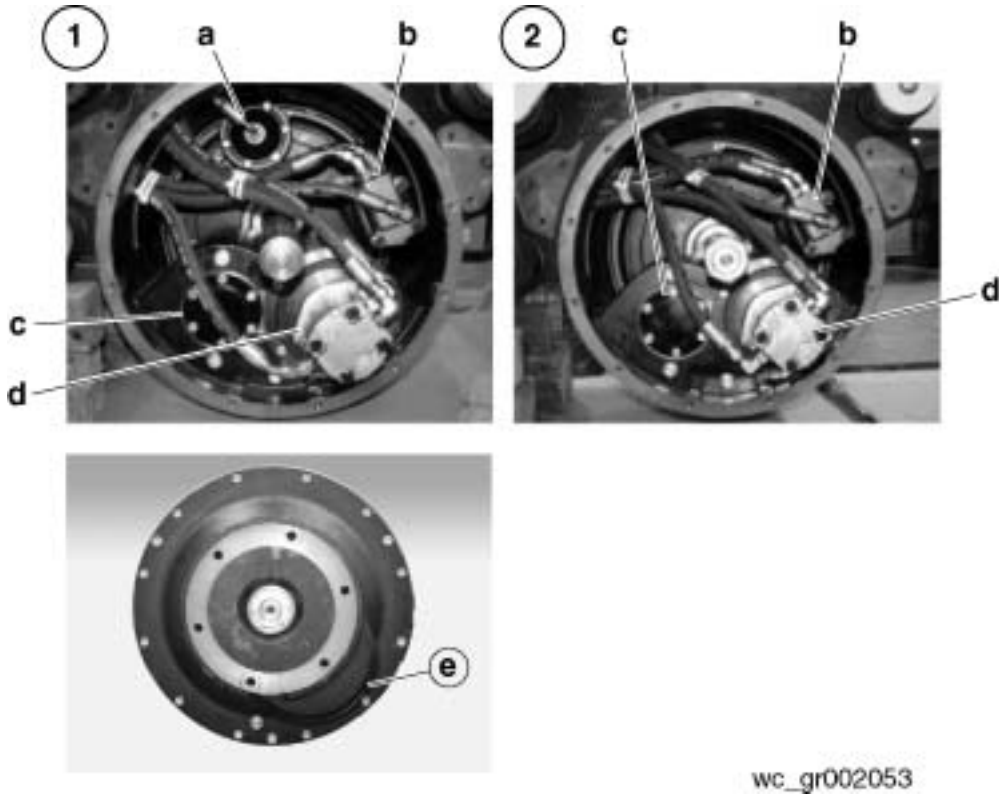

wc_gr002053

8.9 Removing Drums

See graphic: wc_gr002052

8.9.1 Lock articulated joint.

8.9.2 Lift one end of the machine using an appropriate crane or hoist. Insert jack stands **(x)** to support machine from underneath.

8.9.3 Remove the M12 screws **(a)** and washers and remove the scrapers **(b)**.

8.9.4 Remove the six M16x55 screws **(d)** securing the drum **(e)** to the drum support **(f)**.

8.9.5 Remove the three M16 screws **(c)** and washers acting as plugs. In their place, insert three of the M16x55 removed in the previous step. Use these screws as pushers to push the drum off the drive housing.

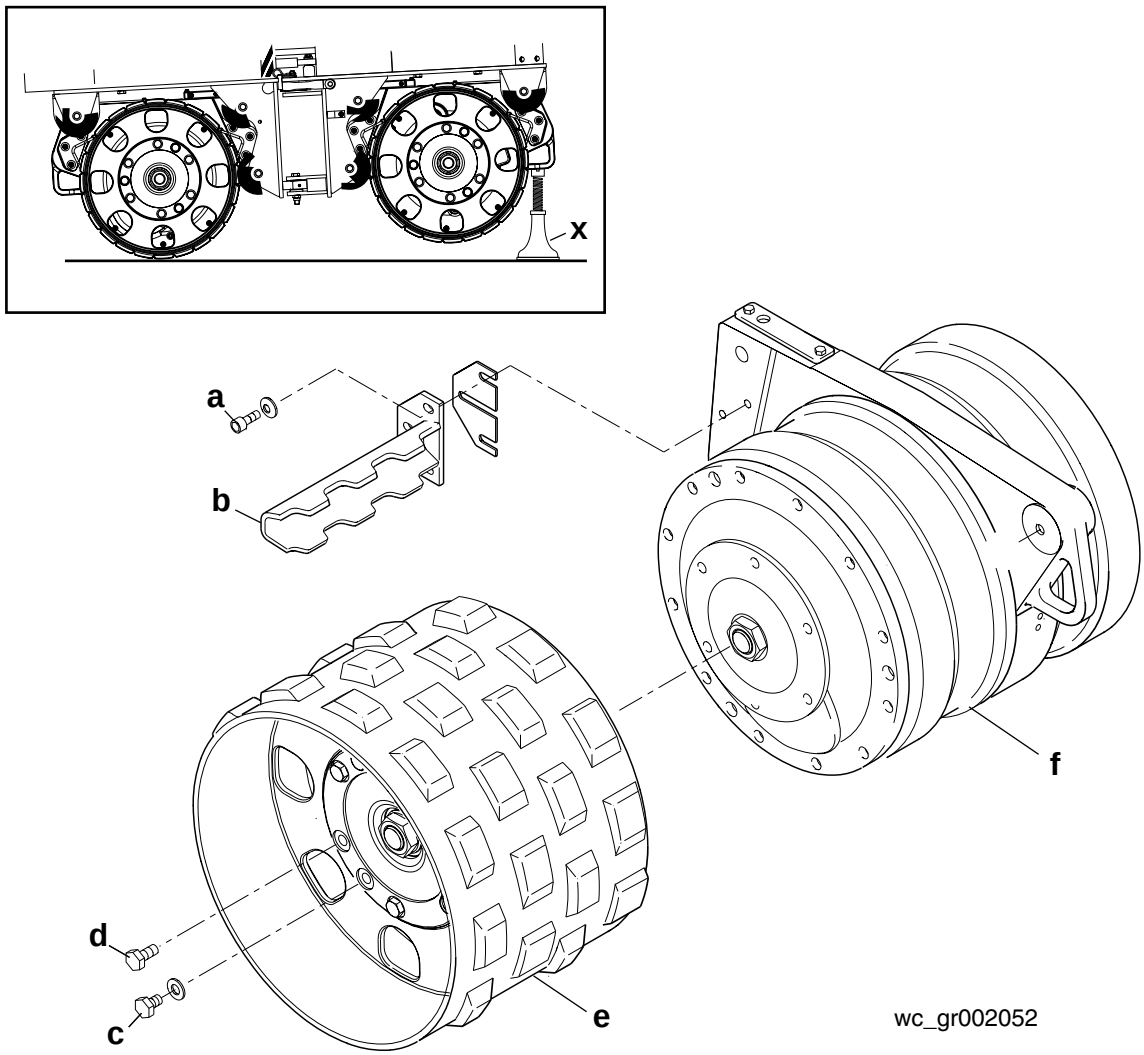

8.10 Installing Drums

See graphic: wc_gr002052

8.10.1 Lock articulated joint.

8.10.2 Lift one end of the machine using an appropriate crane or hoist. Insert jack stands **(x)** to support machine from underneath.

8.10.3 Place the drum **(e)** on the drum support **(f)** and secure it to the hub using six M16x55 screws **(d)** and washers. Use Loctite 243 or equivalent on the screws and torque them to 210 Nm (154 ft.lbs.).

8.10.4 Install the scrapers **(b)** using M12 screws **(a)**. Use Loctite 243 or equivalent on the screws and torque them to 120 Nm (88 ft.lbs.).

8.11 Opening Drum

See graphic: wc_gr002347

8.11.1 Loosen the center hub nut **(a)** so that it is nearly off (2–3 threads remaining on). Do so for both sides of the drum.

8.11.2 Remove the scrapers and the drums. See Section *Removing Drums.*

8.11.3 Position the drum support slightly off the floor and support it with jack stands.

8.11.4 Starting with the exciter side, remove the outer ring of bolts **(b)** securing the slave hub assembly onto the drum support.

8.11.5 Using three pusher bolts in position **(c)**, gradually push the slave hub assembly off the drum support. When the hub releases from the taper of the drive shaft a distinct “pop” will be heard. Be sure to leave the center hub nut on the shaft 2–3 threads to prevent the hub assembly from “popping” off the drum.

8.11.6 Once the slave hub assembly is free, remove the hub nut and remove the slave hub assembly **(d)** from the drum support.

8.11.7 If working on the rear drum support, disconnect the hydraulic line **(e)** to the brake. Cap the line immediately after disconnecting it to prevent contamination of the hydraulic system.

8.11.8 Disconnect the hydraulic lines to the drive motor **(f)**. Cap all lines immediately after disconnecting them to prevent contamination of the hydraulic system.

8.11.9 On the opposite side of the drum support, remove the outer ring of bolts securing the drive hub assembly onto the drum support.

8.11.10 Using three pusher bolts, gradually push the drive hub assembly off the drum support. With the help of an assistant, pull the drive hub assembly completely from the drum support. The assembly will include the shaft, drive motor **(g)**, and the brake **(h)** on rear drum supports.

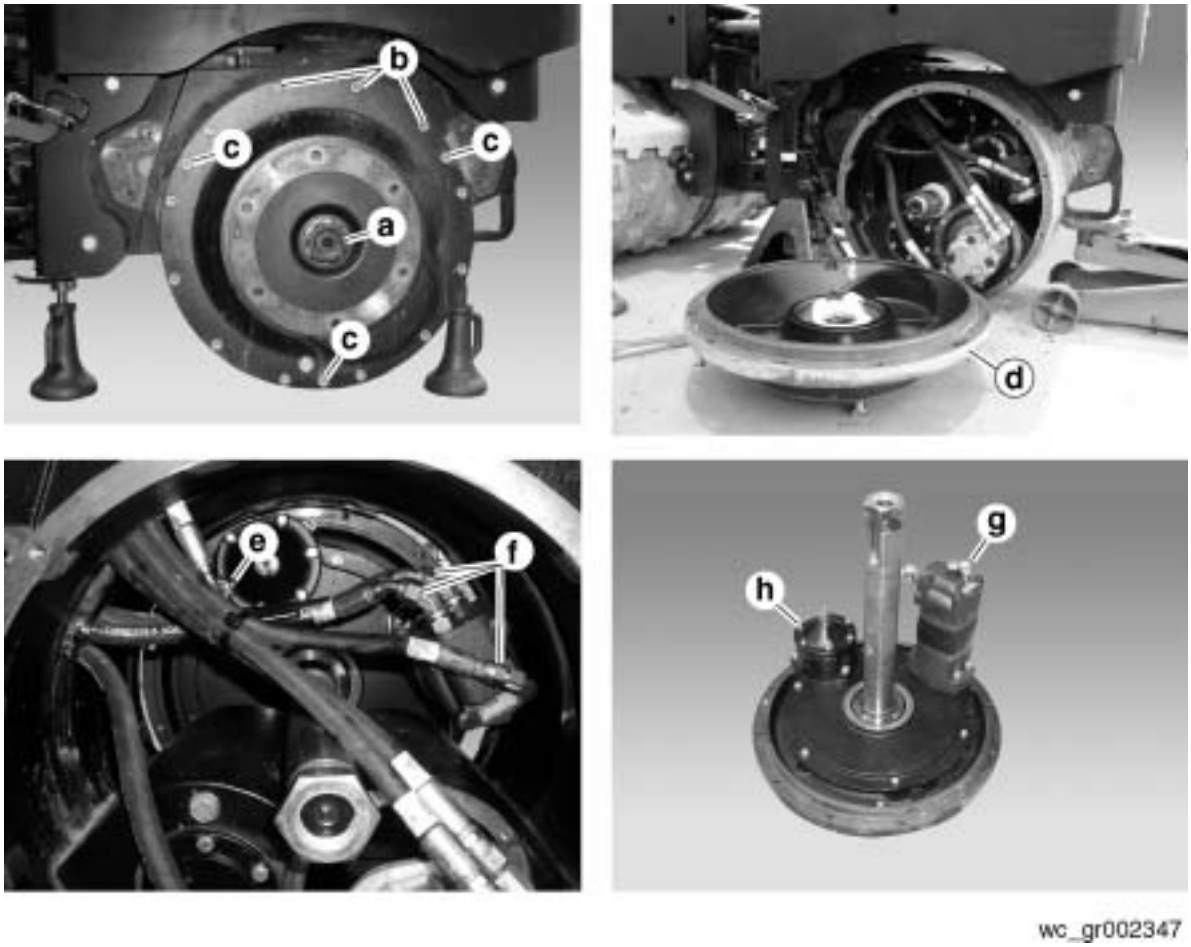

wc_gr002347

8.12 Closing Drum

See Graphic: wc_gr002347 and wc_gr002097

8.12.1 Reassemble drive and slave hubs. See sections *Reassembling Drive Hub* and *Reassembling Slave Hub.*

8.12.2 With the aid of an assistant, position the drive hub assembly (shaft, drive hub, drive motor, and brake on rear drums) into the drum support. Secure the assembly to the drum support using twelve M10 x 20 screws. Use Loctite 243 or equivalent on the screws and torque them to 49 Nm (36 ft.lbs.).

8.12.3 Tighten the hub nut. Torque the hub nut to 816 Nm (600 ft.lbs.).

8.12.4 Connect the drive motor and brake hydraulic lines.

8.12.5 On the exciter side of the drum support, position the slave hub on the drum support. Secure the assembly to the drum support using twelve M10 x 20 screws. Use Loctite 243 or equivalent on the screws and torque them to 49 Nm (36 ft.lbs.).

8.12.6 Tighten the hub nut. Torque the nut to 816 Nm (600 ft.lbs.).

8.13 Disassembling Drive Hub

See Graphic: wc_gr002352 and wc_gr002097

8.13.1 Remove drum. See Section *Removing Drum.*

8.13.2 Open drum. See Section *Opening Drum.*

8.13.3 Remove drive motor **(a)** and brake **(b)** (on rear hubs).

8.13.4 Remove oil from drive hub. Dispose of oil properly.

8.13.5 Remove five screws **(c)** securing gear cover **(d)** and remove the gear cover.
Note: *Because gasket eliminator is applied to the mating surfaces of the hub and the gear cover during assembly, it may be necessary to tap the gear cover to break it loose.*

8.13.6 Press the shaft seal **(e)** from the gear cover.

8.13.7 Remove the retaining ring **(f)**.

8.13.8 Leave the hub nut **(g)** on the shaft and using three pusher bolts **(h)**, pull the gear off the shaft.

8.13.9 Pull the lip seal off the shaft.

8.13.10 With the hub nut loose but still on the shaft, tap the hub from the opposite side to break the hub loose from the taper on the shaft.
Note: *Leaving the hub nut threaded on the shaft prevents the hub from "popping" off the shaft when the hub releases from the taper on the shaft.*

8.13.11 Pull the key from the shaft.

8.13.12 Invert the hub as shown and using a propane torch heat the bearing inner race quickly. When heated to the proper temperature, the bearing race will slide off the hub. Pull it from the shaft if necessary.

8.13.13 Remove the retaining ring from the gear cover and remove the outer bearing race.

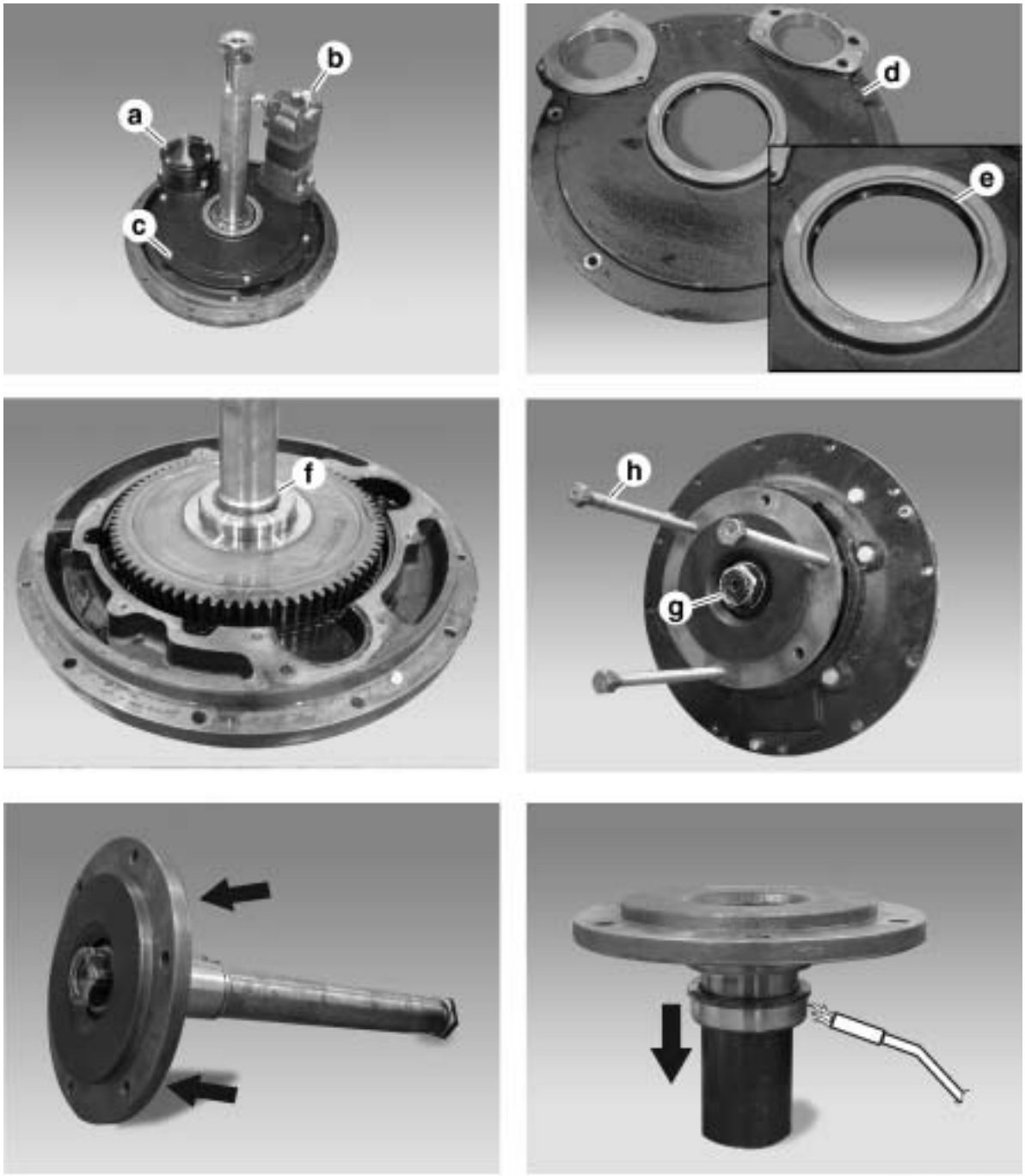

wc_gr002352

8.14 Reassembling Drive Hub

See Graphic: wc_gr002355 and wc_gr002097

8.14.1 Insert the replacement bearing outer race (6) (markings side in first) into the gear cover (5) and secure it with the retaining ring (7).

8.14.2 Press the inner bearing race **(a)** onto the hub and add a new seal **(b)** to the hub. When hub nut is tightened, the seal seats into gear cover (5).

8.14.3 Insert the key (16) and the retaining ring (19) on the shaft (17). Cool the shaft with cold water and apply a thin film of oil to the shoulder of the shaft **(c)** where the gear will rest. Heat the gear to 400°F (use a hot plate or similar source). Then, slide or press the shaft into the gear (23) up to the retaining ring.
Note: *When heated to the correct temperature, very little pressure is required to press the shaft into the gear.*

8.14.4 Allow the gear and shaft to cool. Slide the shaft assembly through the gear cover.

8.14.5 Apply Loctite flexible anaerobic gasket or equivalent on the gear cover and connect the gear casing cover (21) to the gear cover using five M8x20 screws (4). Use Loctite 243 or equivalent on the screws and torque the screws to 41 Nm (30 ft.lbs.).

8.14.6 Add key **(d)** and seal **(e)** to shaft.

8.14.7 Place the hub (3) onto the shaft and secure it with washer (2) and hub nut (1).

8.14.8 Fill hub with 12.5 oz. of 10W30. See specification chart.

8.14.9 Apply Loctite flexible anaerobic gasket **(f)** or equivalent between face of gear casing cover and the drive motor. Install the drive motor **(g)** using three M12 screws. Use Loctite 243 or equivalent on the screws and torque the screws to 85 Nm (62 ft.lbs.).

8.14.10 Apply Loctite flexible anaerobic gasket or equivalent between face of gear casing cover and the brake. Install the brake **(h)** using three M8 screws. Use Loctite 243 or equivalent on the screws and torque them to 41 Nm (30 ft.lbs.).

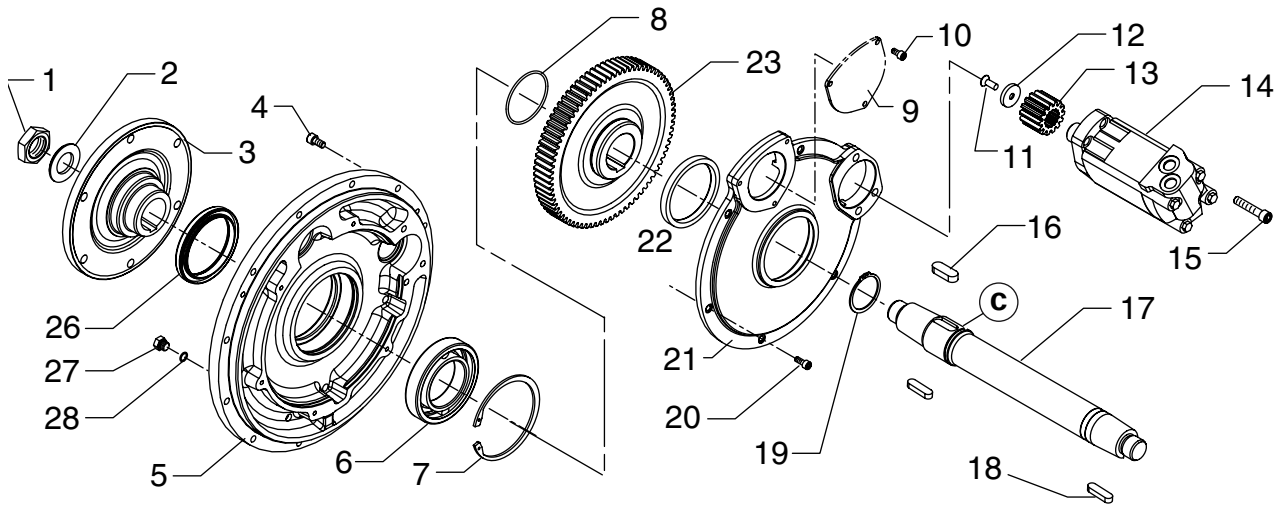
1
2
3
4
5
6
7
8
9
10
11
12
13
14
15
16
17
18
19
20
21
22
23
26
27
28
c

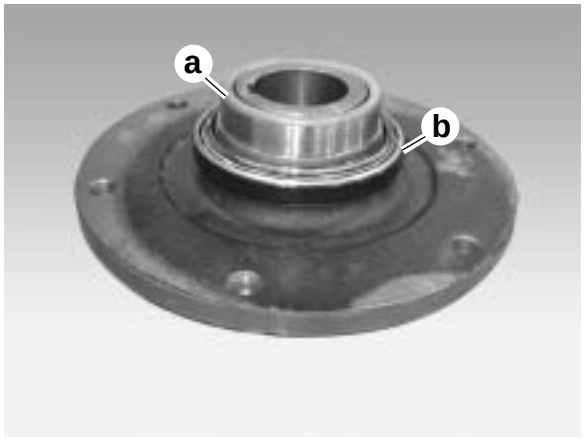
a
b

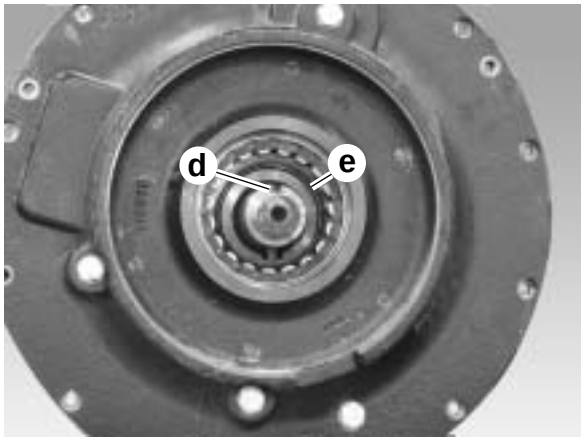
d
e


f

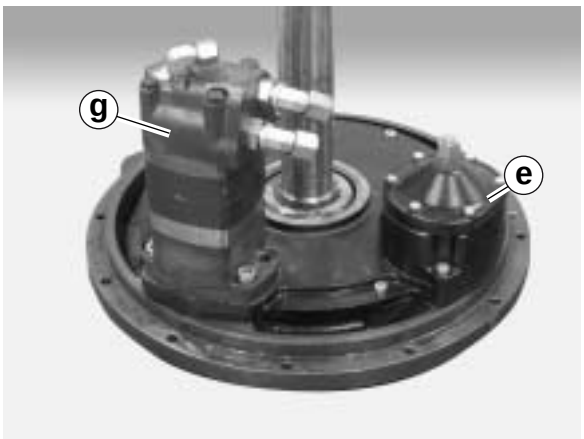
g
e

wc_gr002355

8.15 Disassembling Slave Hub

See Graphic: wc_gr002353 and wc_gr002097

8.15.1 Remove the retaining ring **(a)** and remove the disc **(b)**.

8.15.2 Remove the bearing outer race **(c)** from the cover.

8.15.3 Press the seal **(d)** from the cover.

8.15.4 Invert the hub as shown and using a propane torch heat the bearing inner race quickly. When heated to the proper temperature, the bearing race will slide off the hub. Pull it from the shaft if necessary.

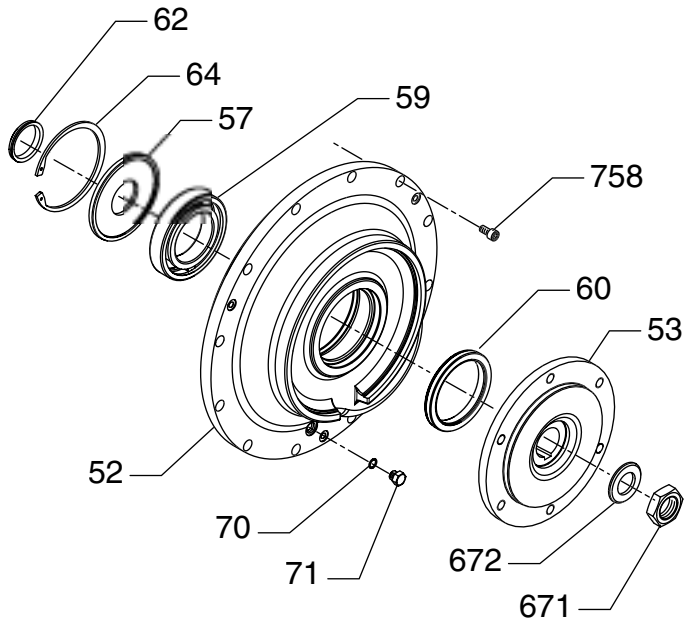

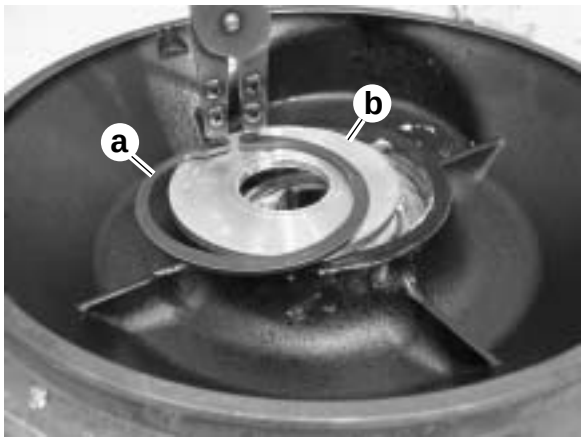



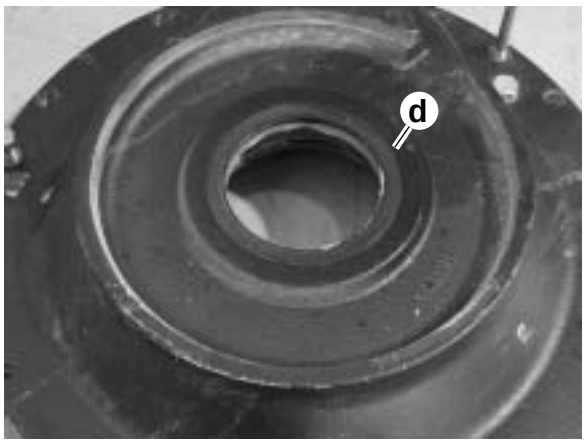

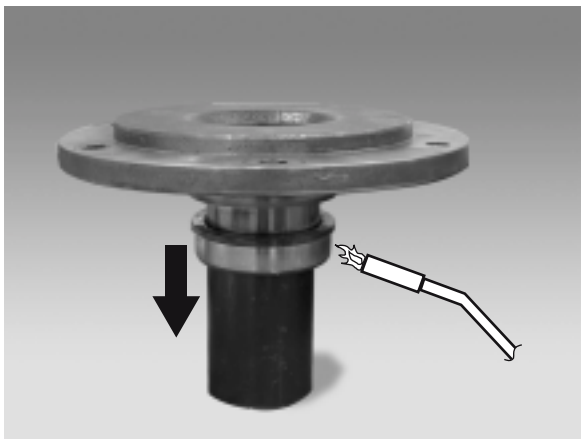

wc_gr002353

8.16 Reassembling Slave Hub

See Graphic: wc_gr002356 and wc_gr002097

8.16.1 Press new seal **(a)** into cover.

8.16.2 Apply a liberal amount of EMB lubriplate white grease or equivalent to the replacement bearing outer race **(b)** and insert it into the gear cover. Secure it with the disc **(c)** and retaining ring **(d)**.

8.16.3 Press the inner bearing race **(e)** onto the hub and add new replacement seal **(f)**.

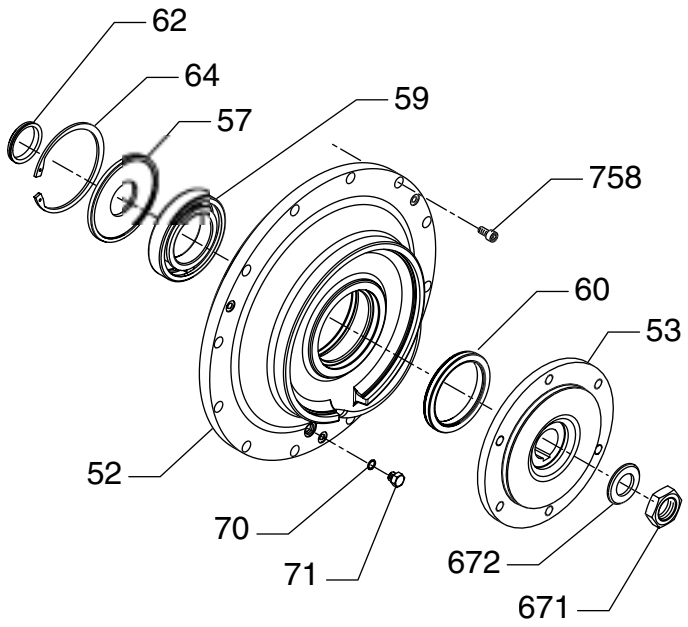

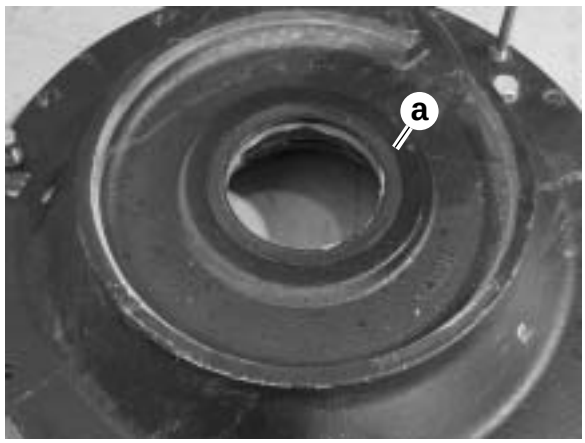

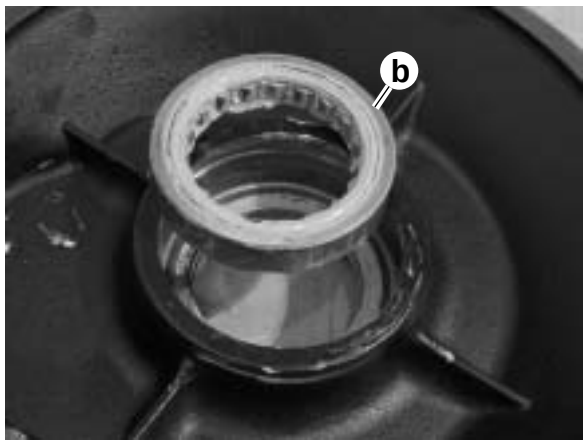

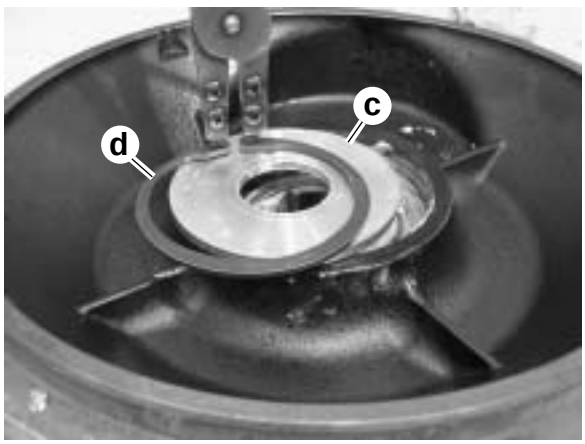



wc_gr002356

8.17 Rebuilding Brake

See Graphic: wc_gr002354

Disassembly:

8.17.1 Open the drum. See Section *Opening the Drum.*

8.17.2 Remove drive hub. See Section *Disassembling Drive Hub.*

8.17.3 Remove the three screws (698) securing the brake to the hub and remove the brake.
Note: *Gasket eliminator is applied to the mating surfaces of the hub and the brake during assembly, it may be necessary to tap the brake cover to break it loose from the hub.*

8.17.4 Remove fitting and drain hydraulic oil from casing; dispose of hydraulic oil properly.

8.17.5 Remove the retaining ring (90) and remove gear (56).

8.17.6 Remove the six screws (693) securing the cover (81) and remove the cover.

8.17.7 Remove O-ring **(a)** from cover.

8.17.8 Remove the plate (83) and inner O-ring (94) from housing (80).

8.17.9 Remove the retaining ring (89) and pull bearing (87) from cover.

8.17.10 Pull the shaft (82) from inside the housing.

8.17.11 Remove the ring spacer (84) and spring (85).

8.17.12 Remove the retaining ring (88) and pry bearing **(b)** out of housing.

8.17.13 Pull seal **(c)** from housing.

Reassembly:

8.17.14 Insert the seal **(c)** into housing.

8.17.15 Insert bearing (86) into housing (80) and secure with retaining ring (88).

8.17.16 Dip O-ring (94) in hydraulic oil and position on face of housing.

8.17.17 Insert bearing (87) into cover (81) and secure with retaining ring (89).

8.17.18 Align holes in plate (83) with pins and place plate on housing.

8.17.19 Add spring (85) and gear to shaft and insert shaft assembly into housing.

8.17.20 Apply Loctite 243 or equivalent to six screws (693) and secure cover (81) to housing.

8.17.21 Add gear (56) to shaft and secure with retaining ring (90).

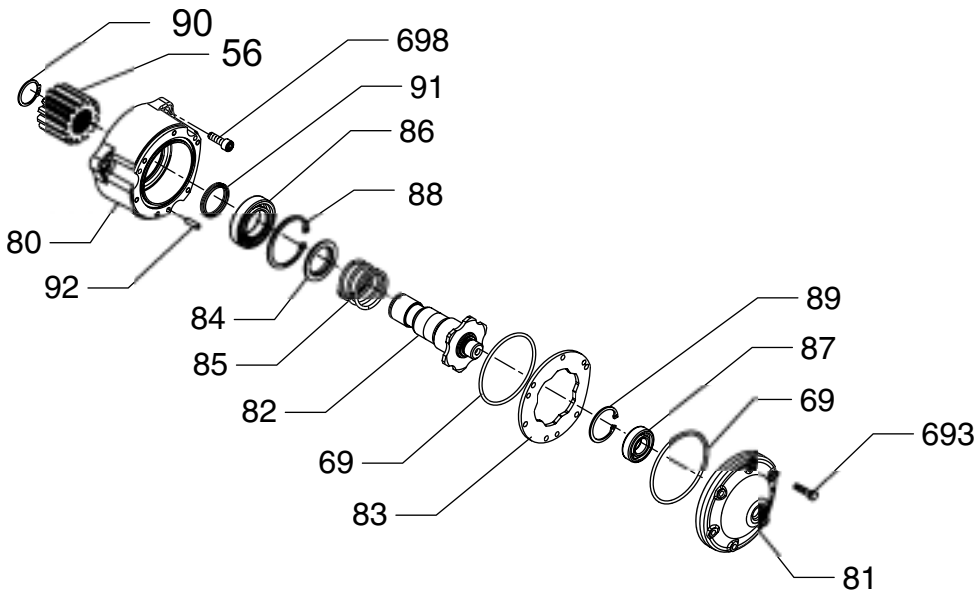





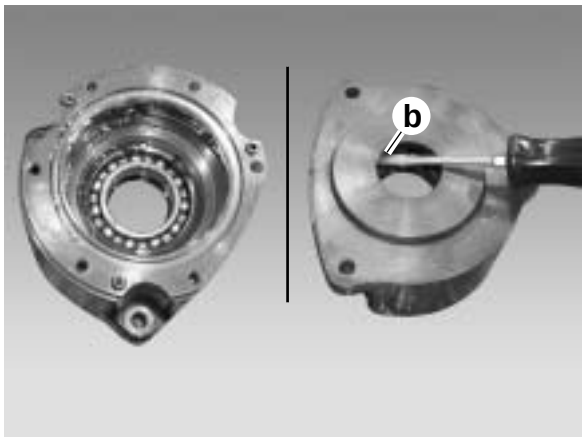



wc_gr002354

8.18 Exciter Exploded View

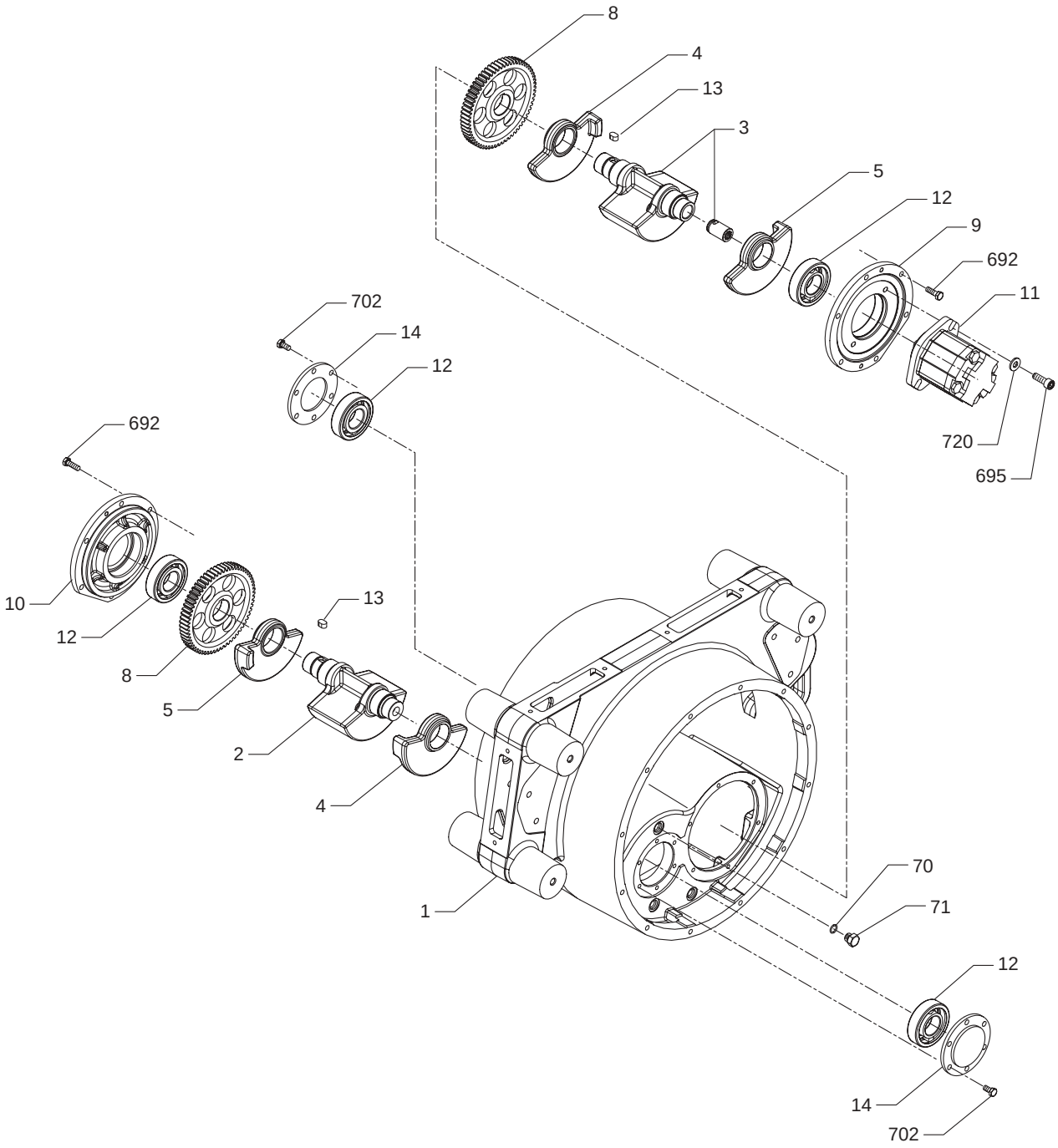

wc_ex0009025100_14

8.19 Exciter Parts List

Ref. Pos.	Part No. Artikel Nr.	Qty. St.	Description Beschreibung	Descripción Description	Measurem./Abm. Torque/Drehm.	Norm Sealant Schmierstoff
1	0116902	1	Drum support Bandagenträger	Basa del tambor Support de tambour		
2	0119224	1	Exciter shaft Erregerwelle	Eje del excitador Arbre de l'excitatrice		
3	0119225	1	Exciter shaft Erregerwelle	Eje del excitador Arbre de l'excitatrice		
4	0119226	2	Eccentric weight Unwucht	Masa excéntrica Balourd excentrique		
5	0119227	2	Eccentric weight Unwucht	Masa excéntrica Balourd excentrique		
8	0116318	2	Gear Zahnrad	Engranaje Engrenage		
9	0116958	1	Cover Deckel	Tapa Couvercle		
10	0116959	1	Bearing cover Lagerdeckel	Tapa del rodamiento Couvercle du roulement		
11	0119314	1	Exciter motor Erregermotor	Motor excitador Moteur d'excitatrice		
12	0080742	4	Roller bearing Rollenlager	Rodamiento de rodillos Roulement à rouleaux		
14	0080211	2	Cover Deckel	Tapa Couvercle		
67	0116872	1	Key (square) Keil	Chaveta Clavette	A14 x 9 x 50	DIN6885
70	0014398	3	O-Ring O-Ring	Anillo-O Joint torique	12 x 2	
71	0078269	3	Plug (threaded) Schraubverschluß	Tapón roscado Bouchon	9/16-18in	
692	0011457	12	Screw Schraube	Tornillo Vis	M8 x 25 25Nm/18ft.lbs	DIN933 0029311
695	0011543	2	Screw Schraube	Tornillo Vis	M8 x 20 41Nm/30ft.lbs	DIN912 0029311
702	0012361	12	Screw Schraube	Tornillo Vis	M8 x 16 25Nm/18ft.lbs	 0029311
720	0033988	2	Lockwasher Federring	Arandela elástica Rondelle de ressort	10	

wc_gr002351

8.20 Disassembling Exciter

See graphic: wc_gr002349

8.20.1 Open the drum. See Section *Opening the Drum.*

8.20.2 Remove the two screws **(a)** securing the exciter motor **(b)** to the drum support and remove the exciter motor.

8.20.3 Remove the screws securing the exciter housing cover. Use two of the longer screws **(c)** as pushers to push off the exciter housing cover **(d)**.

8.20.4 Pull the exciter shaft **(e)** and drive gear from the exciter housing.

8.20.5 Remove the screws securing the bearing cover **(f)** to the exciter housing. Remove the bearing cover by tapping it from inside the exciter housing.

8.20.6 On the opposite side of the machine, remove the exciter housing cover and the bearing cover as stated above.

8.20.7 Pull the second exciter shaft and drive gear from the exciter housing.

8.20.8 Using a properly-sized adapter plug **(g)**, tap the bearing from the exciter housing.

8.20.9 Using an Arbor press, press the bearing from the exciter housing cover **(h)** that the exciter motor mounts to.

8.20.10 Using an inside-style puller, pull the bearing from the other exciter housing cover **(i)**.

8.20.11 Tap on the small eccentric weight **(j)** to remove the bearing race from the exciter shaft.

8.20.12 Using a gear puller **(k),** pull the gear and the inner bearing race off the exciter shaft.

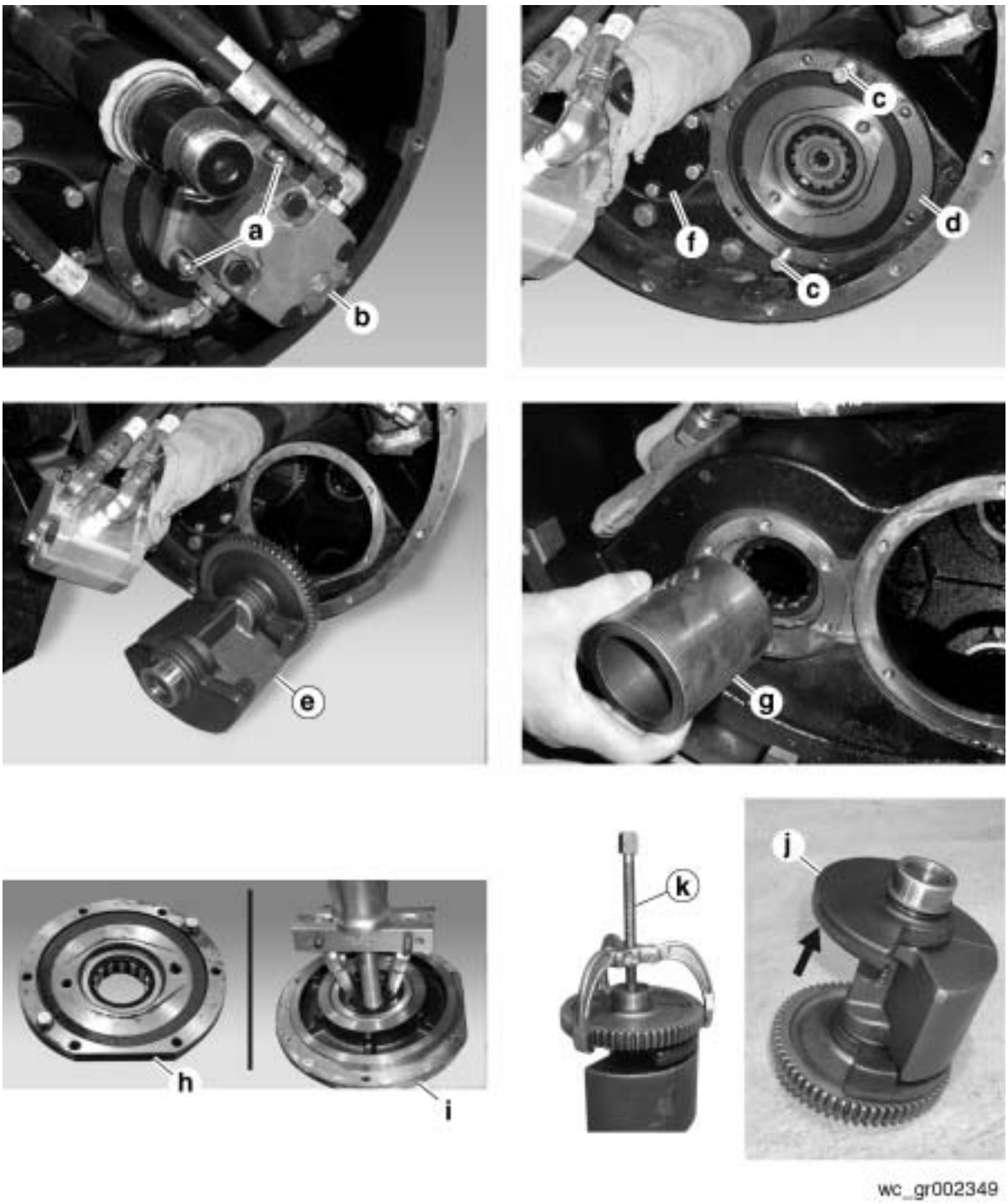

wc_gr002349

8.21 Reassembling Exciter

See Graphic: wc_gr002350

8.21.1 Using an Arbor press, press new outer bearing races **(a)** into the exciter housing covers.

8.21.2 Install the eccentric weight **(b)** and key **(c)** on exciter shaft. Then, press the gear **(d)** and the bearing race **(e)** onto the exciter shaft. Do so for both exciter shafts.

8.21.3 On the opposite side of each shaft, install the eccentric weight **(f)** and press the inner race **(g)** onto the exciter shaft. Do so for both exciter shafts.

8.21.4 Insert the bearing outer race **(h)** into the follower side of the exciter housing.

8.21.5 Insert the follower-side exciter shaft assembly into the exciter housing.

8.21.6 Apply Loctite 515 gasket eliminator or equivalent to the bearing cover **(i)** and secure the follower-side bearing cover to the exciter housing with six screws. Torque screws to 25 Nm (18 ft.lbs.)

8.21.7 Insert the exciter-side bearing outer race into the exciter housing. Apply Loctite 515 gasket eliminator or equivalent to the bearing cover and secure the cover with six M8x16 screws. Use Loctite 243 or equivalent on screws and torque to 25 Nm (18 ft.lbs.).

8.21.8 Fill exciter housing with oil.

8.21.9 Insert driven exciter assembly into the exciter housing so that weights are even and level with each other **(j)**.

8.21.10 Apply Loctite 515 gasket eliminator or equivalent to the bearing cover and secure the cover with six M8x25 screws. Use Loctite 243 or equivalent on screws and torque to 25 Nm (18 ft.lbs.).

8.21.11 Apply Loctite 515 gasket eliminator or equivalent to the exciter motor and secure with two M8x20 screws. Use Loctite 243 or equivalent on screws and torque to 25 Nm (18 ft.lbs.).

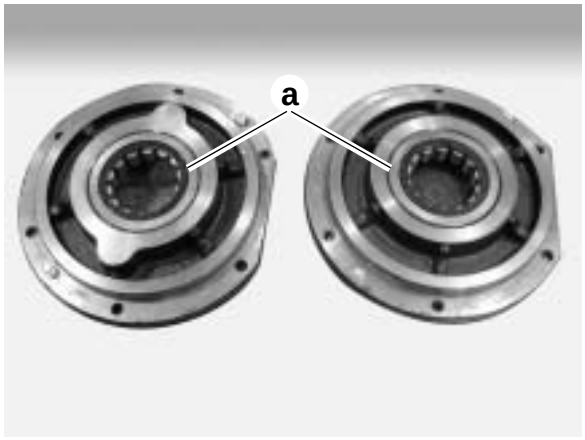

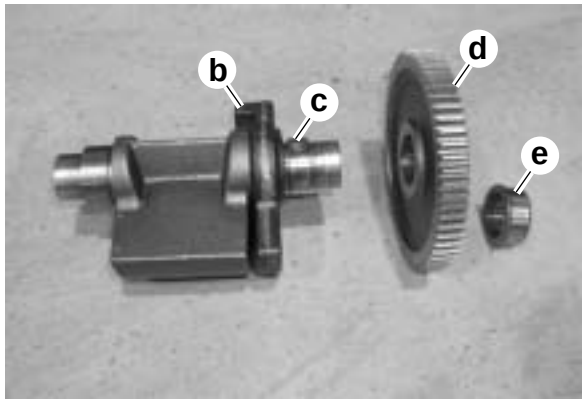







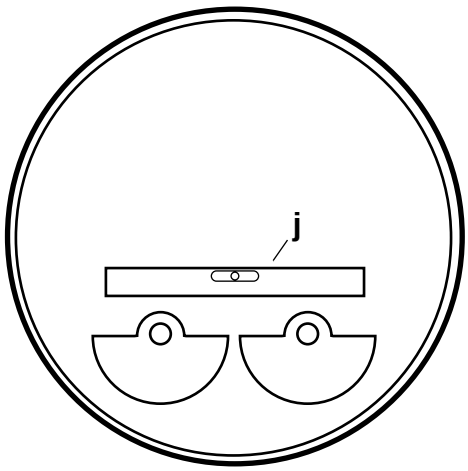

wc_gr002350

8.22 Removing Drum Support

See Graphic: wc_gr002348

8.22.1 Open the drum. See Section *Opening the Drum.*

8.22.2 Disconnect the hydraulic lines **(a)** at the exciter motor. Plug hydraulic lines immediately after disconnecting to prevent contamination of the hydraulic system.

8.22.3 Remove the exciter components (weights, shafts, covers). See Section *Rebuilding Exciters.*

8.22.4 Empty the drum support of oil.

8.22.5 Label positions of all the hoses **(b)**.

8.22.6 Cut the wire tie **(c)**.

8.22.7 Using an appropriate hoist or crane, raise the machine approximately six inches off the ground. Using an appropriate hoist or crane, secure the drum support in the raised position **(d)**. Using jack stands **(e)** or screw jacks, secure the machine frame in position. **Secure the machine frame and the drum support using separate devices.** You will be required to lower the drum support in upcoming steps while retaining the position of the machine frame.

8.22.8 Remove the shock mount screws **(f)** at the outer and the upper inner locations.

8.22.9 Lower the drum support to gain access to the upper hose clamp.

8.22.10 Loosen the nuts **(g)** of the hose clamps. Remove the screws **(h)** securing the hose clamps to the drum support.

8.22.11 Remove the brake line **(i)** from the valve block and pull the brake line from the drum support.

8.22.12 Lower the drum support to the floor. Guide the hoses through it as it is being lowered.

8.22.13 Remove the screw **(j)** securing the lower inner shock mount.

8.22.14 Continue guiding the hoses through the drum support and pull the drum support completely away from the frame.

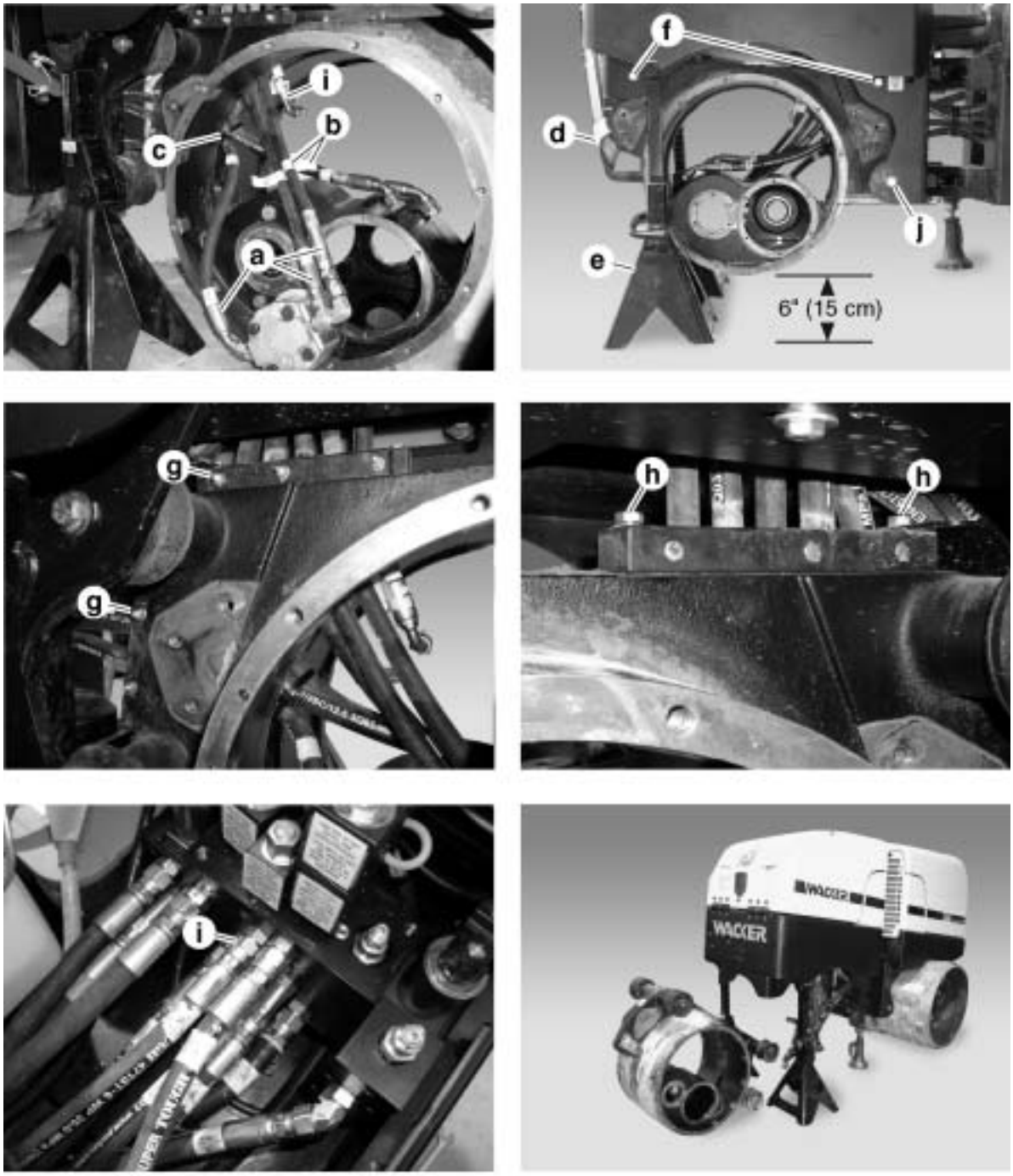

wc_gr002348

8.23 Installing Drum Support

See Graphic: wc_gr002348 and wc_gr002359

8.23.1 With shock mounts attached to drum support, position drum support on the floor and under frame of machine. As you position it, guide the hydraulic hoses into the drum support.

8.23.2 Attach upper and lower hose clamps to drum support. During mounting of hose clamps on rear drums, attach hose guard (15). Do not tighten hose clamps around hoses at this time.

8.23.3 Lower the machine frame so that the outer shock mounts can be secured. Use Loctite 243 or equivalent on the screws and torque them to 86 Nm (63 ft.lbs.).

8.23.4 Continue lowering machine until innermost shock mounts can be secured. Use Loctite 243 or equivalent on the screws and torque them to 86 Nm (63 ft.lbs.).

8.23.5 Cut the head off an M10 screw. Insert it into the drum support in an upper location and use it as a guide pin. With the aid of an assistant or appropriate crane, position the drive hub assembly so that the shaft is approximately halfway in to the drum support. Connect the hydraulic line leading to the hydraulic fitting **(b)** on the drive motor that is closest to the drive hub. Using the pin as a guide, slide the drive hub assembly the rest of the way into the drum support.

8.23.6 Use Loctite 243 or equivalent on twelve M10x20 screws and secure the drive hub assembly to the drum support. Torque the screws to 49 Nm (36 ft.lbs.).

8.23.7 Attach the rest of the hydraulic lines and add wire tie.

8.23.8 Tighten hose clamps around hoses.

8.23.9 Grease inner seal **(c)** with white lithium grease and place it approximately halfway on the taper portion of the drive shaft.

8.23.10 Install the key on drive shaft and install the hub with hub nut. Torque hub nut to 816 Nm (600 ft.lbs.). Also torque drive-side hub nut.

8.23.11 Install drums and scrapers. See Section *Installing Drums.*

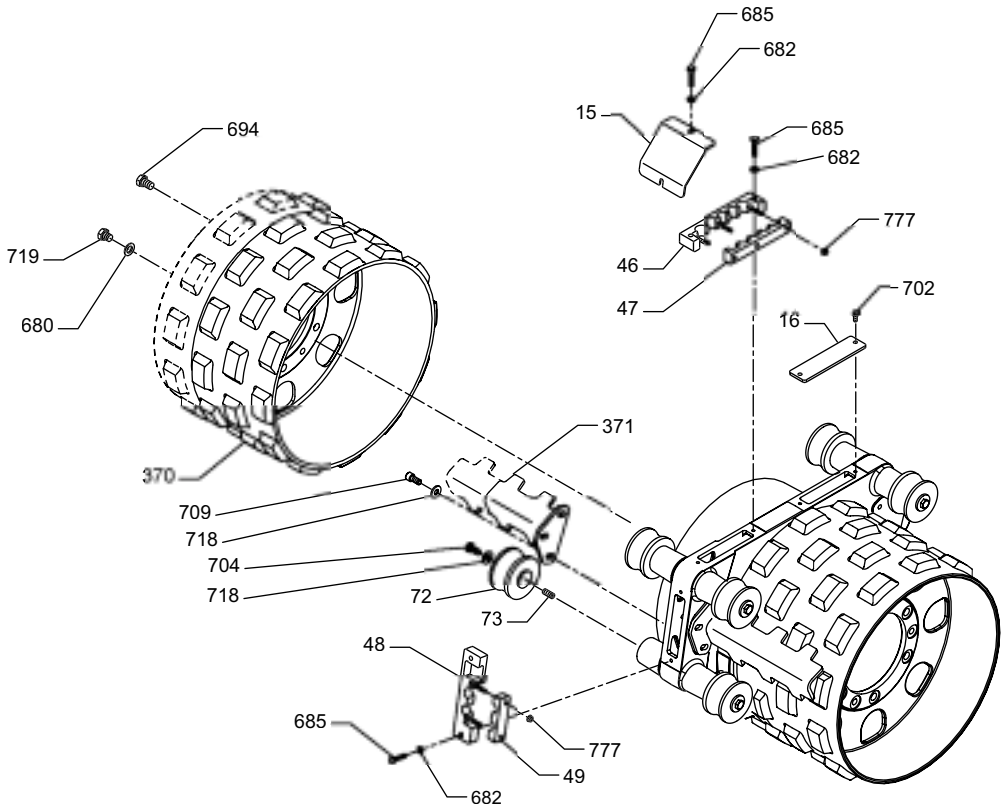
685
682
15
694
685
682
777
719
46
680
47
702
16
371
370
709
718
704
718
72
73
48
685
777
49
682

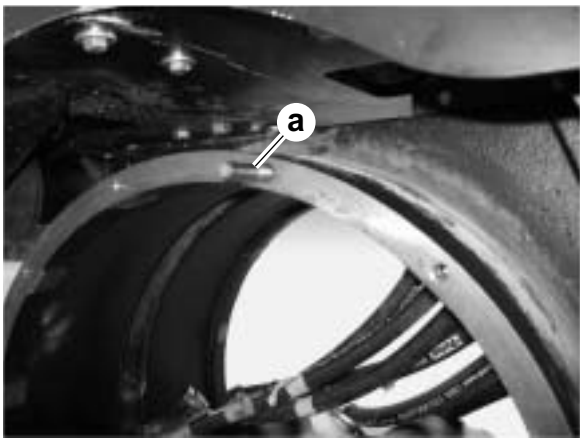
a


b

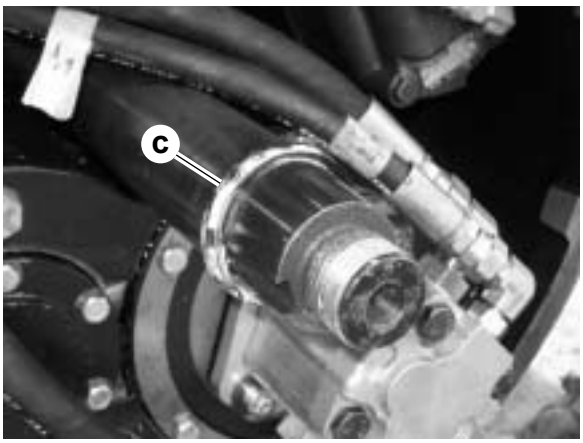
c

wc_gr002359

8.24 Replacing Steering Cylinder

See Graphic: wc_gr002368

Removal:

8.24.1 Position the roller as shown **(1)** so that you have adequate access to the piston head screw **(a)**. If the steering cylinder is not allowing you to position the roller in this manner, remove the steering hydraulic hoses **(b & c)** at the valve. Then, manually position the roller.

8.24.2 Loosen, but do not remove, the screw securing the piston head.

8.24.3 Reposition the roller in the opposite manner as shown **(2)**. This retracts the piston and allows the cylinder to be removed more readily.

8.24.4 Remove the steering hydraulic hoses **(b & c)** at the valve.

8.24.5 Remove the drive hydraulic hoses **(d & e)** at the valve.

8.24.6 Remove the piston head screw **(a)** and the cylinder head screw.

8.24.7 Pull the cylinder head up and off the mounting stud. Do likewise for the piston head. If necessary, jack up the machine slightly at the articulated joint to increase access.

8.24.8 Maneuver the cylinder **(f)** until you can pull it up and out of the machine. If necessary, adjust the angle of the machine halves closer or farther apart.

8.24.9 Once removed, remove the hydraulic hoses from the cylinder.

Installation:

8.24.10 Insert the cylinder **(f)** with hoses attached into the machine frame and place over mounting studs. Remove the hydraulic oil cooler and guard for improved access. See Section *Replacing Hydraulic Oil Cooler.*

8.24.11 Using Loctite 243 or equivlaent on M12 screws, secure the cylinder to the mounting studs. Torque screws to 86 Nm (63 ft.lbs.).

8.24.12 Attach the hydraulic hoses **(d & e)** at the valve.

8.24.13 Attach the steering hydraulic hoses **(b & c)** at the valve.

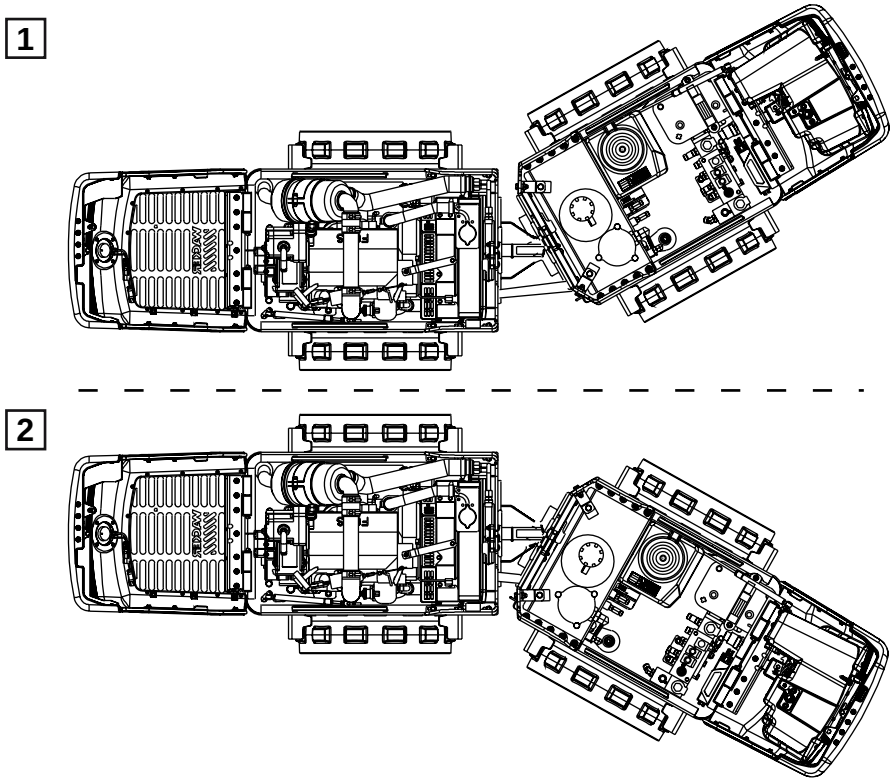

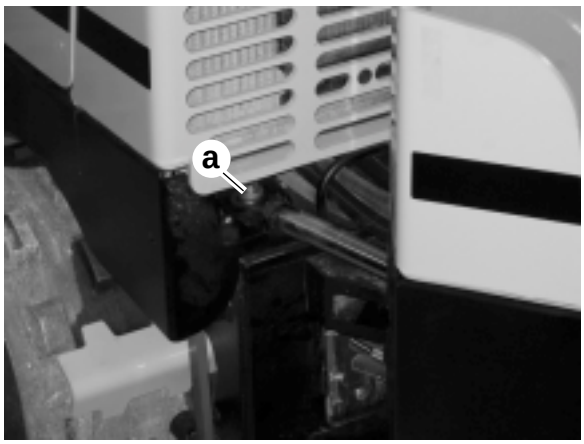



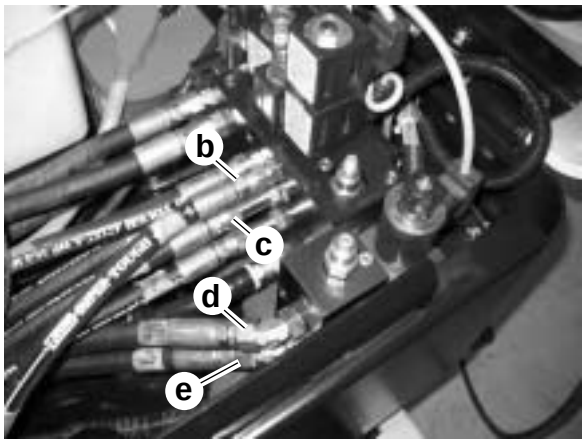

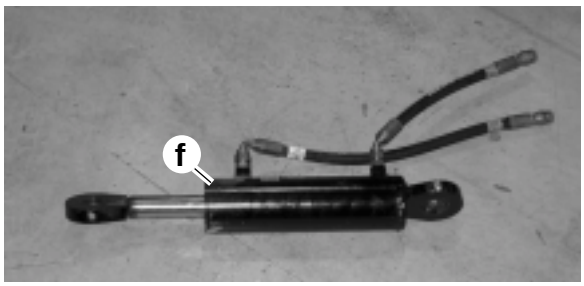

wc_gr002368

8.25 Replacing Valve Block

See Graphic: wc_gr002369

Removal:

Note: *Shown with fuel tank removed for clarity.*

8.25.1 Remove battery. See Section *Removing Battery.*

8.25.2 Carefully mark all hydraulic hoses **(a)** and remove them from the valve. Immediately plug all hydraulic hoses to prevent contamination of the hydraulic system.

8.25.3 Remove the green connector plug **(b)** from the decoder module. All valve block solenoid wires run to this plug.

8.25.4 Remove the screw **(c)** securing the ground wires and remove the ground wires from the valve block.

8.25.5 Remove the four screws securing the bracket at its base and remove the valve and bracket as an assembly **(d)**.

8.25.6 Remove the valve block from the mounting bracket.

Installation:

8.25.7 Secure the valve block to the mounting bracket.

8.25.8 Position the valve block assembly **(d)** into the machine frame and secure it with four M12 screws and nuts. Torque the screws to 86 Nm (63 ft.lbs.).

8.25.9 Secure the ground wires with screw **(c)**.

8.25.10 Connect the green connector plug **(b)** to the decoder module.

8.25.11 Replace all the hydraulic hoses **(a)**.

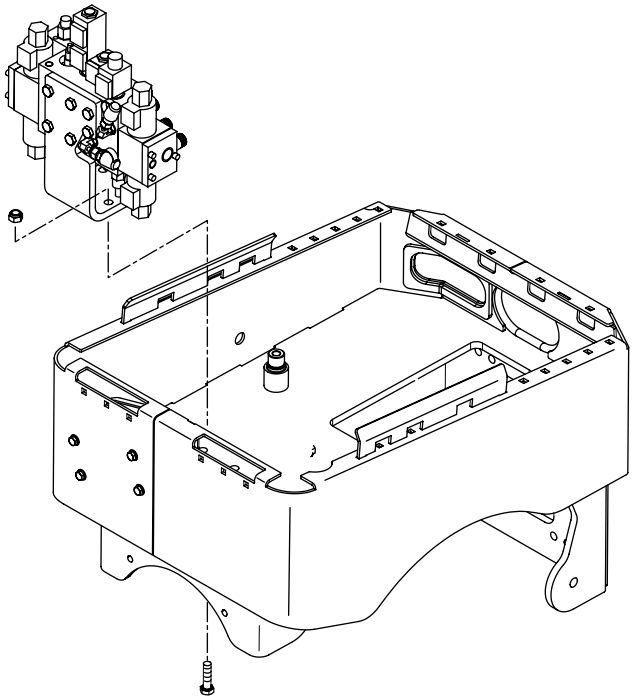

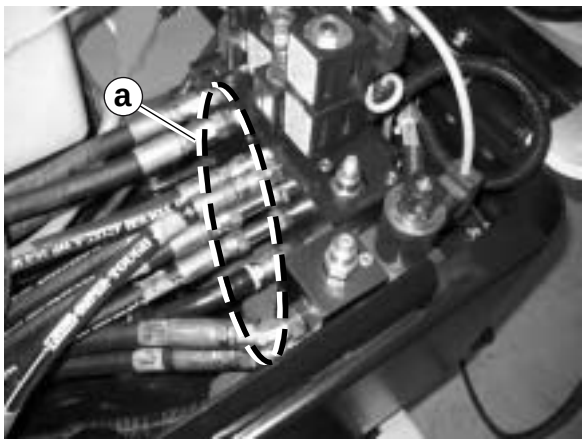

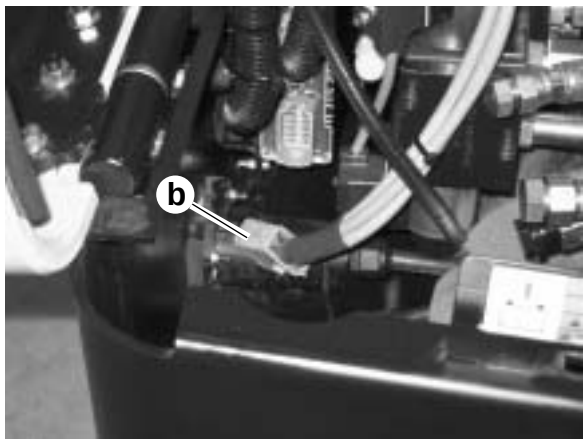

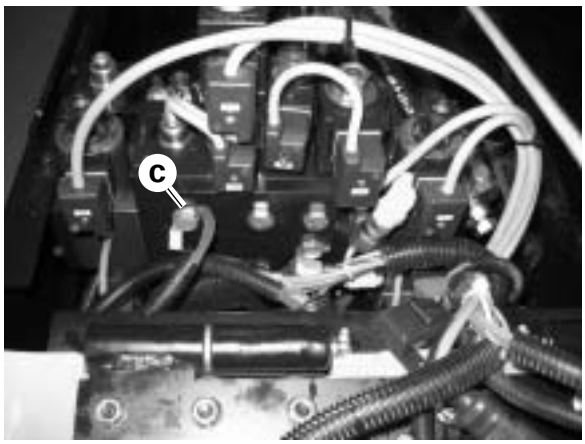

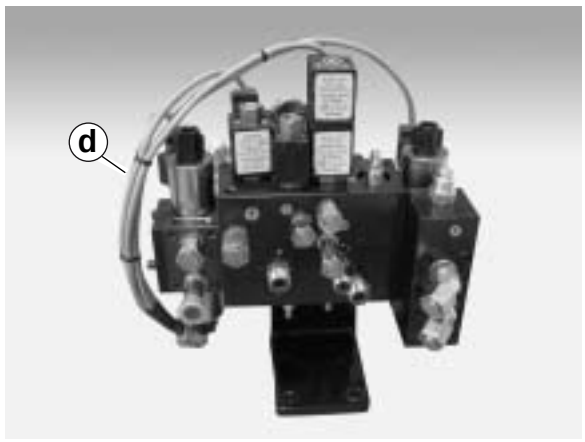

wc_gr002369

8.26 Replacing Fuel Tank

See Graphic: wc_gr002370

Removal:

8.26.1 Remove battery. See Section *Removing Battery.*

8.26.2 Drain fuel tank.

8.26.3 Close cocks **(a)** on inlet and outlet lines at tank.

8.26.4 Remove inlet and outlet hoses at cocks.

8.26.5 Remove the two screws **(b)** on the upper side and the four screws **(c)** on the under side of the frame securing the tank.
Note: *Access to screws securing tank to frame is substantially improved by removing the drum.*

8.26.6 Remove the screws securing the air cylinder **(d)** and remove the cylinder and the bracket.

8.26.7 Pull the fuel tank from the machine.

Installation:

8.26.8 Position the fuel tank into the machine under the hydraulic tank.

8.26.9 Secure the fuel tank with the four screws **(c)** on the under side of the frame and the two screws **(b)** on the upper side.

8.26.10 Reattach the fuel hoses to the tank at the cocks **(a)**.

8.26.11 Reinstall the air cylinder **(d)** and bracket.

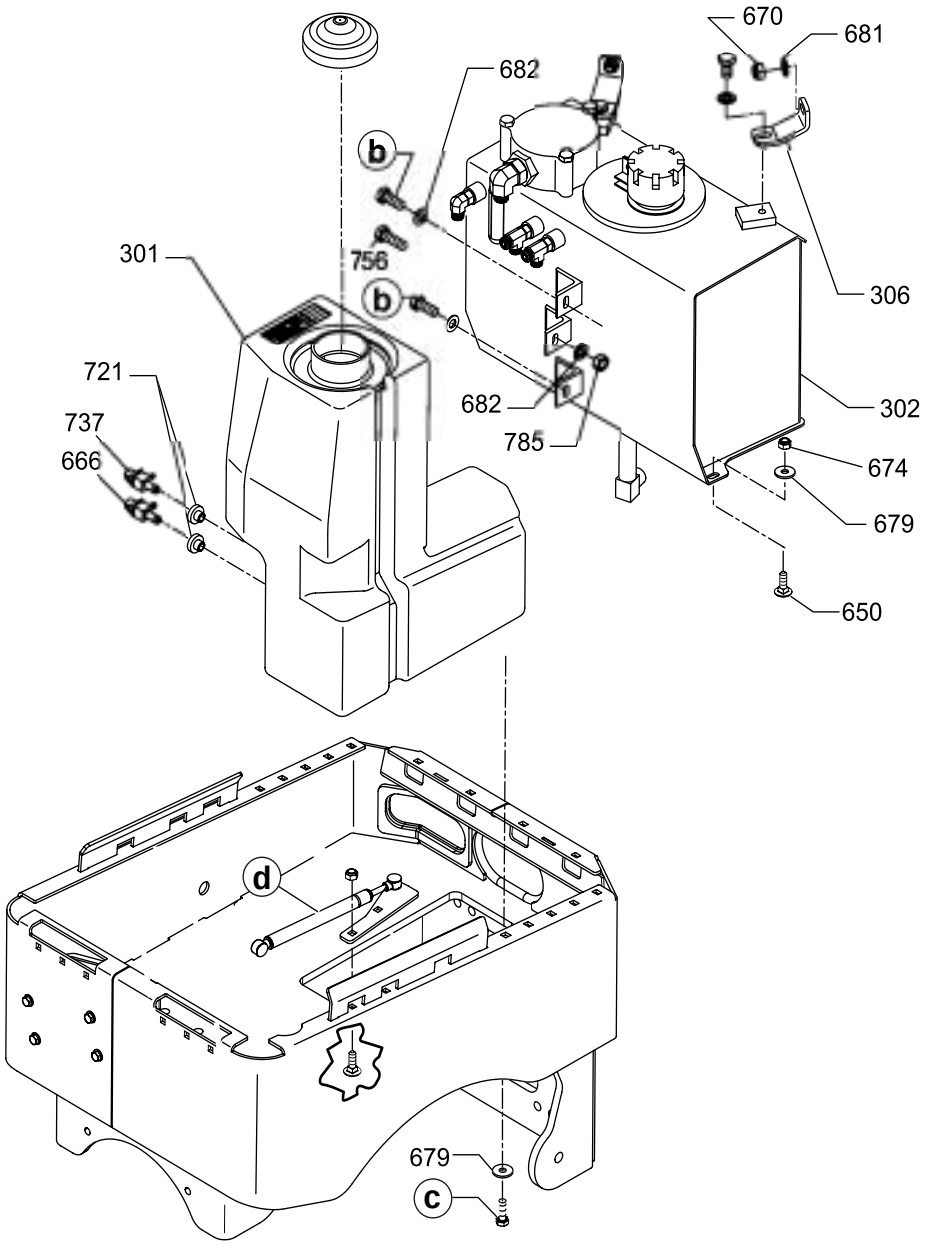
670
681
682
b
301
756
b
306
721
737
666
682
785
302
674
679
650
d
679
c

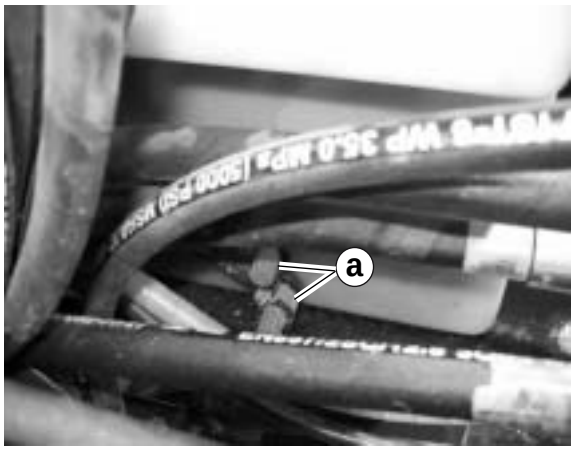
a



wc_gr002370

8.27 Replacing Hydraulic Tank

See Graphic: wc_gr002371

Removal:

8.27.1 Drain hydraulic oil tank.

8.27.2 Remove fuel tank. See Section *Replacing Fuel Tank*.

8.27.3 Label then remove the five hydraulic hoses **(a)** leading into the tank. The hose **(d)** from the valve block can remain attached and be removed after the tank is free.

8.27.4 Remove the hardware **(b)** securing the hood cable.

8.27.5 Remove the two screws (690) at the top of the hydraulic tank.

8.27.6 Remove the two screws (797) securing the tank to the machine frame.

8.27.7 Remove the hoses **(c)** connected to the under side of the tank. If the tank is not drained well, there will be significant spillage. **Be sure tank is well drained.** Work quickly to avoid oil spillage. When underside hoses are free, remove tank from machine.

Installation:

8.27.8 Position tank on machine frame.

8.27.9 Connect hydraulic hoses **(c)** on under side of tank.

8.27.10 Secure tank to frame with the two upper screws (690) and the two lower screws (797).

8.27.11 Attach hydraulic hoses **(a)** to appropriate ports.

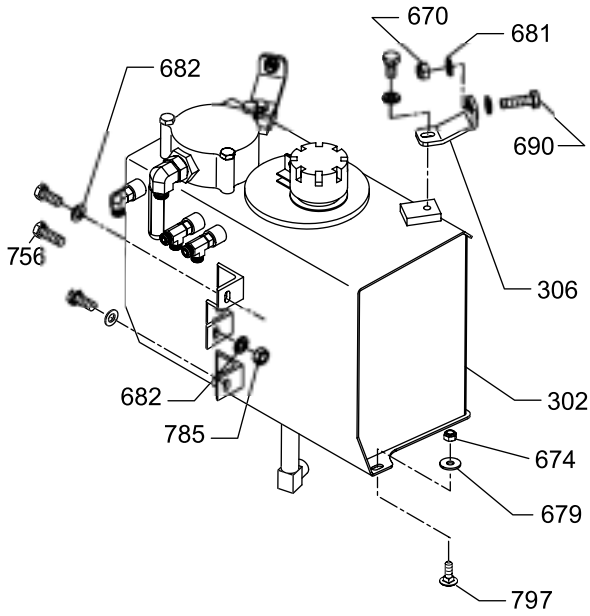

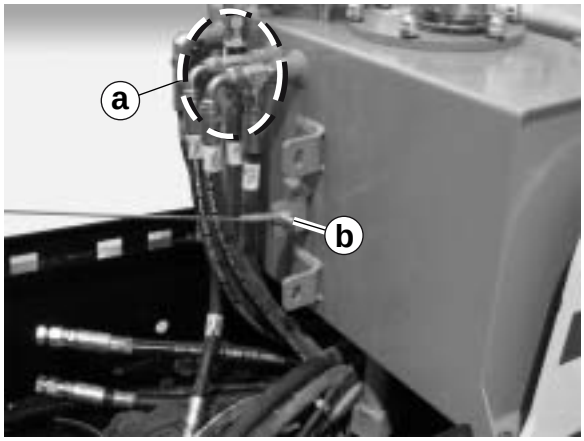



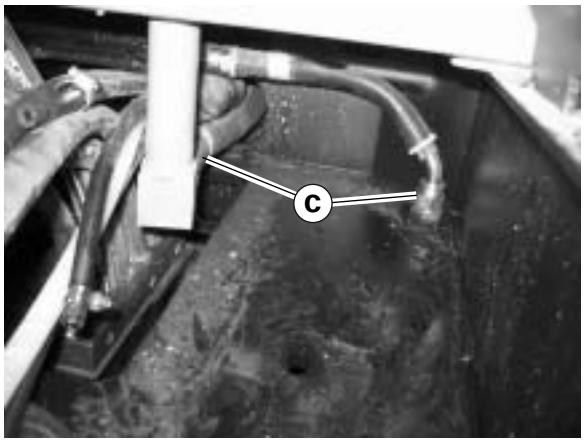

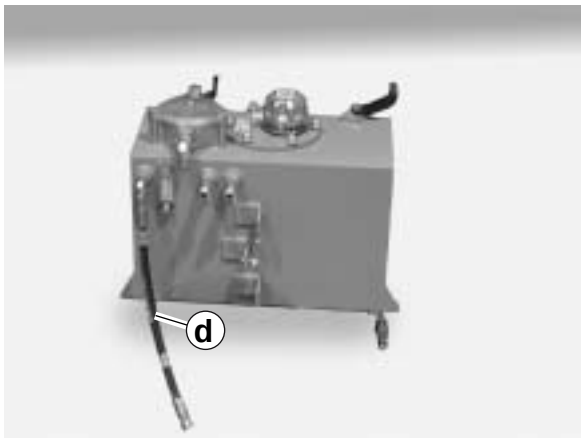

wc_gr002371

8.28 Replacing Hydraulic Pumps

See Graphic: wc_gr002373

Removal:

8.28.1 Drain Hydraulic oil.

8.28.2 Remove hydraulic hoses **(a or b)**.

8.28.3 On drive pump, remove nut and screws securing relay bracket **(c)**.

8.28.4 Remove the four screws securing the pump to the engine and remove the pump.

Installation:

8.28.5 Secure pump to engine using four screws—apply Loctite 243 or equivalent to screws and torque to 41 Nm (30 ft.lbs.).

8.28.6 On drive pump, secure relay bracket **(c)**.

8.28.7 Attach hydraulic hoses **(a or b)**.

8.28.8 Fill hydraulic tank with oil.

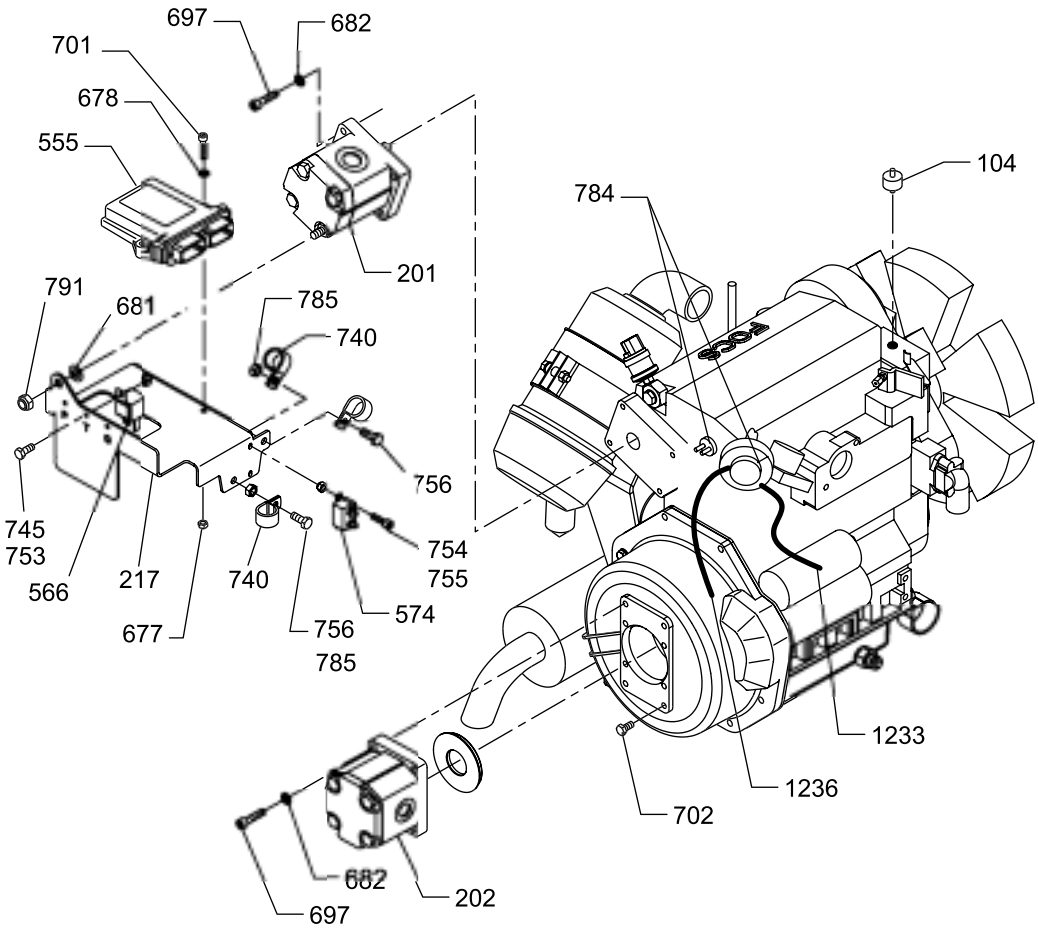
697
682
701
678
555
201
791
681
785
740
756
745
753
566
217
740
754
755
574
677
756
785
784
104
1233
1236
702
682
202
697

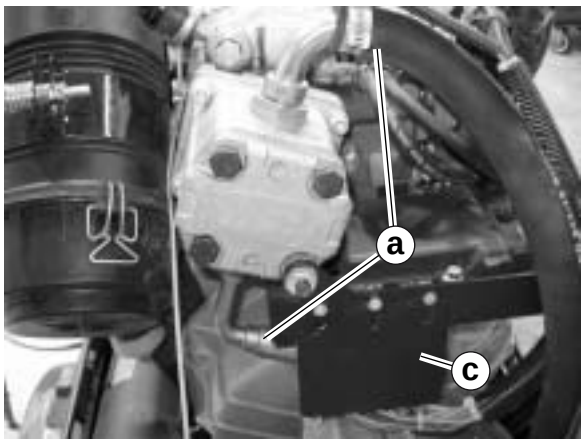
a
c

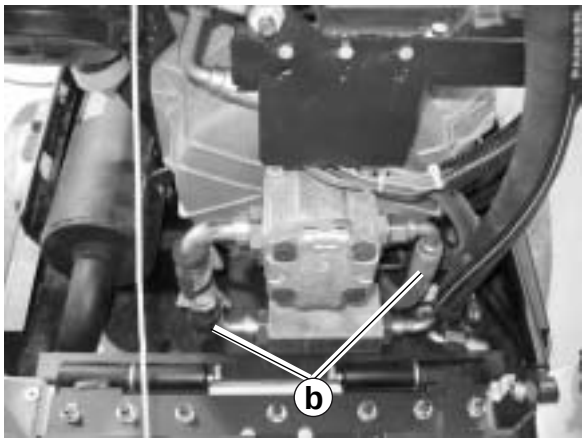
b

wc_gr002373

8.29 Replacing Hydraulic Oil Cooler

See Graphic: wc_gr002374

Removal:

8.29.1 Drain hydraulic oil tank.

8.29.2 Disconnect the two hose clamps **(a)** securing the air intake hose **(b)** and remove the hose.

8.29.3 Disconnect the two hydraulic hoses **(c)** running to the cooler. Plug the hoses immediately after disconnecting to prevent contamination of the hydraulic system.

8.29.4 Remove the four screws **(d)** securing the guard and remove the guard and hydraulic oil cooler as an assembly.

8.29.5 Disconnect the hydraulic lines **(e)** from the guard to the cooler.

8.29.6 Remove the two screws **(f)** securing the cooler to the guard and remove the cooler.

Installation:

8.29.7 Install the cooler to the guard using two screws **(f)**.

8.29.8 Connect the hydraulic lines **(e)** from the guard to the cooler.

8.29.9 Secure the guard/cooler assembly to the machine using four screws **(d)**. Torque the screws to 25 Nm (18 ft.lbs).

8.29.10 Connect the two hydraulic hoses **(c)** running to the cooler.

8.29.11 Connect the air intake hose **(b)** using two hose clamps **(a).**



wc_gr002374

8.30 Replacing Radiator and Shroud

See Graphic: wc_gr002375

Removal:

8.30.1 Drain coolant.

8.30.2 Remove hydraulic oil cooler. See Section *Removing Hydraulic Oil Cooler.*

8.30.3 Remove drain hose **(a)** from radiator.

8.30.4 Snip wire ties **(b)** securing overflow tube **(c)** and disconnect overflow tube from radiator.

8.30.5 Disconnect input hose **(d)** from radiator.

8.30.6 Disconnect coolant level sensor at connector **(e)**.

8.30.7 Remove screws securing shroud **(f)**.

8.30.8 Remove the two nuts securing the radiator to the shock mounts **(g)**.

8.30.9 Loosen the hose clamp and remove the hose **(h)** running to the engine at the engine.

8.30.10 Remove the hose clamps on green hose **(i)** and remove green hose from engine.

8.30.11 Lift radiator up and out of machine.

If removing shroud:

8.30.12 Remove second hose **(j)** to overflow reservoir at the overflow reservoir.

8.30.13 Remove nut **(k)** securing shroud on top of engine and remove shroud.

If removing radiator shock mount:

8.30.14 Remove screw securing shock mount from underneath frame and remove the shock mount.

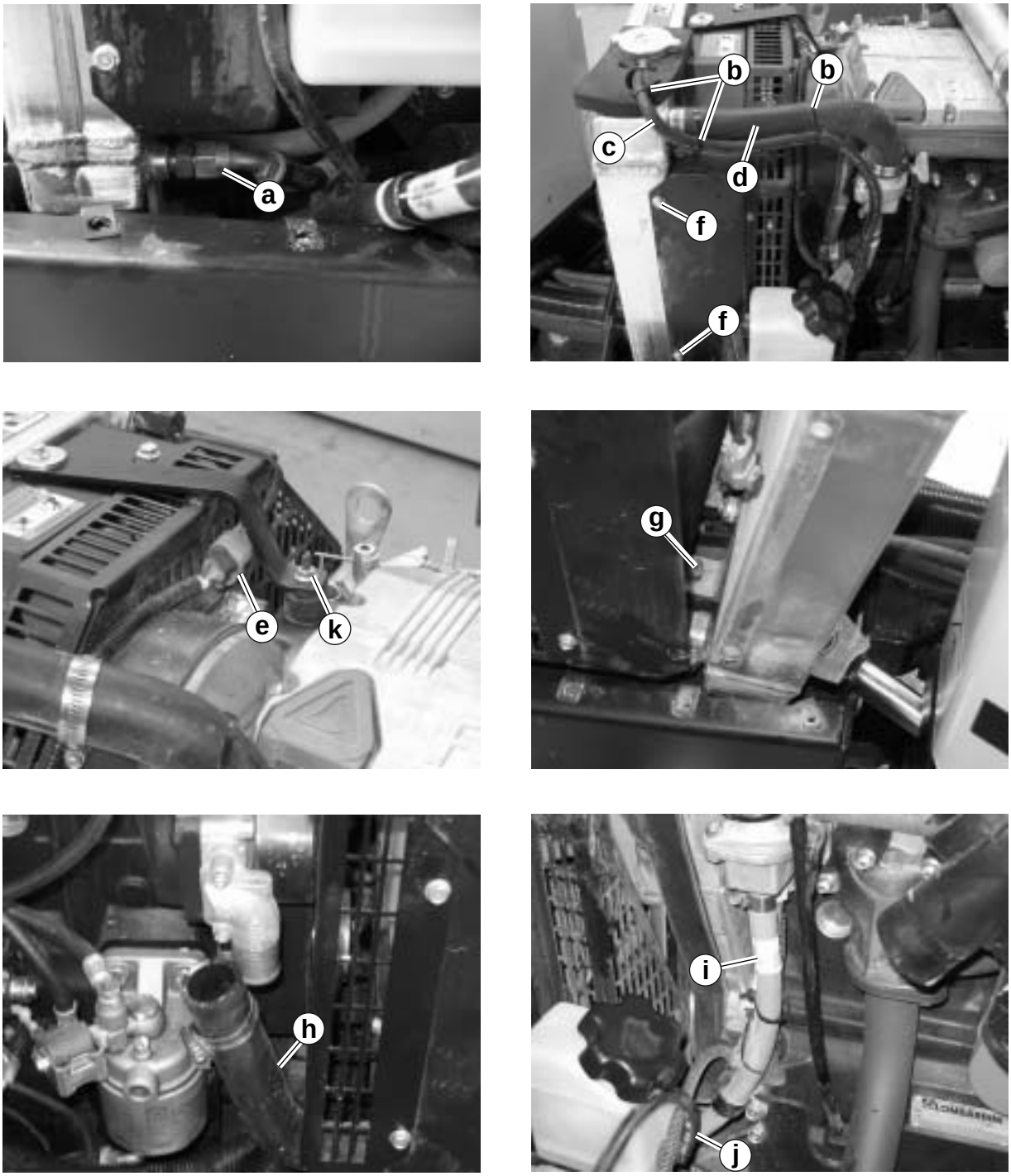

wc_gr002375

Installation:

If replacing shock mount:

8.30.15 Secure shock mount to frame using Loctite 243 or equivalent on M10 screw. Torque screw to 49 Nm (36 ft.lbs.).

If replacing shroud:

8.30.16 Preassemble components of shroud if necessary.

8.30.17 Secure shroud to top of engine with nut **(k)**.

8.30.18 Attach hose **(j)** to overflow reservoir.

8.30.19 Insert radiator into machine frame. Secure radiator to shock mounts with nuts **(g)**.

8.30.20 Connect green hose **(i)** to engine using hose clamp.

8.30.21 Connect hose **(h)** to engine using hose clamp

8.30.22 Secure shroud **(f)** to radiator.

8.30.23 Connect coolant level sensor at connector **(e).**

8.30.24 Connect input hose **(d)** using hose clamps.

8.30.25 Connect overflow tube **(c)** and new wire ties **(b).**

8.30.26 Connect drain hose **(a)**.

8.30.27 Fill radiator with coolant.

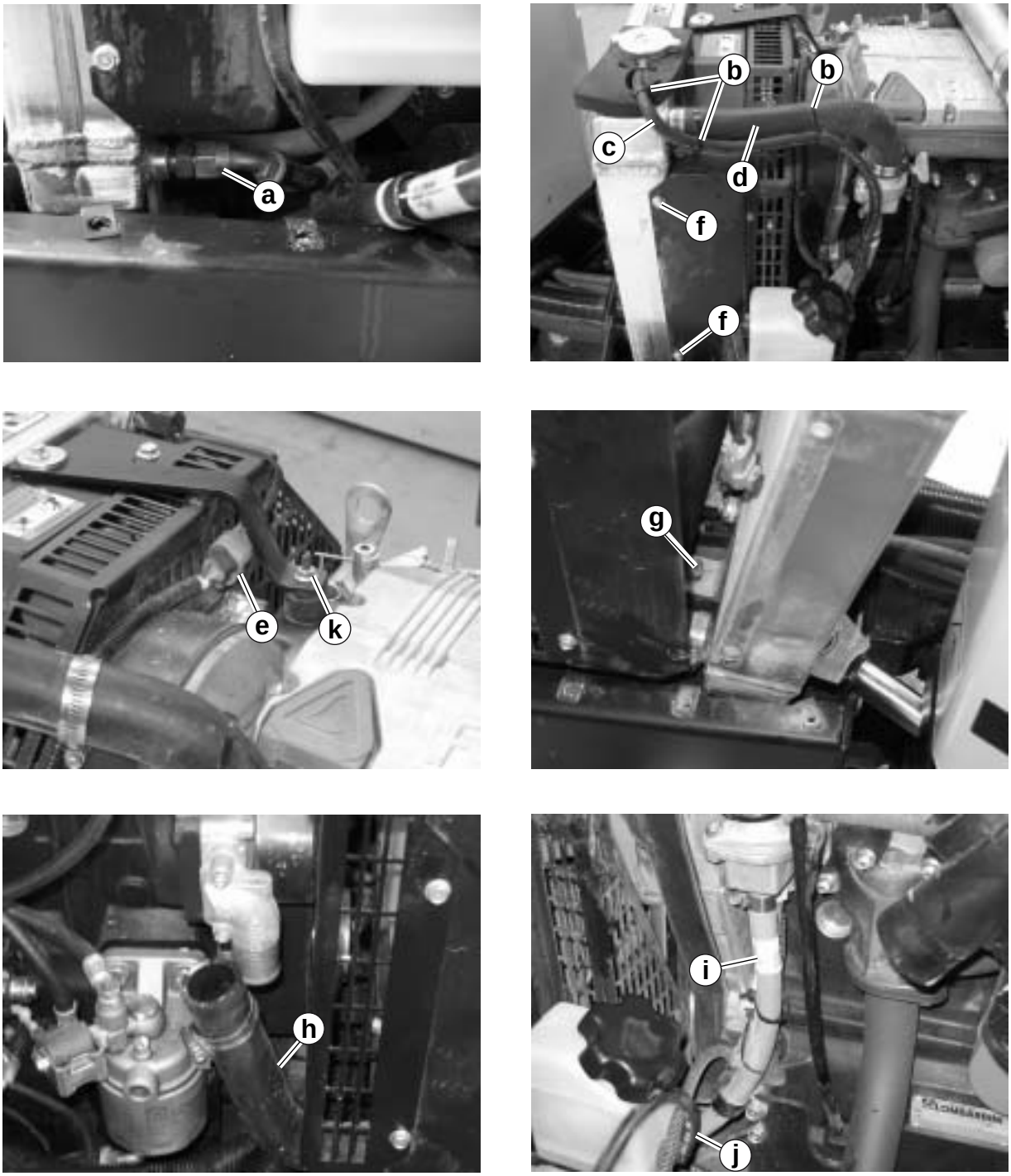

wc_gr002375

8.31 Replacing Engine

See Graphic: wc_gr002376

Removal:

8.31.1 Drain engine coolant.

8.31.2 Drain hydraulic oil.

8.31.3 Drain engine oil.

8.31.4 Remove hydraulic oil cooler. See section *Removing Hydraulic Oil Cooler.*

8.31.5 Remove radiator and shroud. See section *Replacing Radiator and Shroud.*

8.31.6 Remove hydraulic pumps. See section *Replacing Hydraulic Pumps.*

8.31.7 Remove the hardware **(a)** securing the air cleaner bracket. The lower hardware also secures the muffler.

8.31.8 Loosen the hose clamp **(b)** securing the air cleaner and remove the air cleaner and bracket as an assembly.

8.31.9 Remove the screw **(c)** securing the dipstick and remove the dipstick.

8.31.10 Remove the screws **(d)** securing the muffler to the engine. Rotate the muffler toward the engine, so tab clears bell housing. Then, push the muffler down and towards rear of machine until it can be lifted out of the machine.

8.31.11 Remove the oil drain tube **(e)** at the engine.

8.31.12 Disconnect the wiring harness at the oil pressure sensor **(f)**, throttle solenoid **(g)**, glow plugs **(h)**, starter **(i)**, voltage regulator **(j)**, and fuel solenoid **(k)**. On the opposite side of the engine disconnect the coolant temperature sensor **(l)**.

8.31.13 Remove the ground wires **(m)** at the starter mounting flange.

8.31.14 Remove the fuel hoses **(n)** at the fuel inlet. Also remove hoses at fuel filter **(o)**.

8.31.15 Disconnect the screw at the lifting eye and remove the front hood cable. Reinstall the lifting eye.

8.31.16 Support the engine by the lifting eyes with an appropriate lift or hoist. Remove the screws **(p)** securing the engine to the mounting brackets and lift the engine off the frame enough to disconnect the ground wire **(q)** from the voltage regulator. After the ground wire is disconnected, lift the engine up and out of the machine.

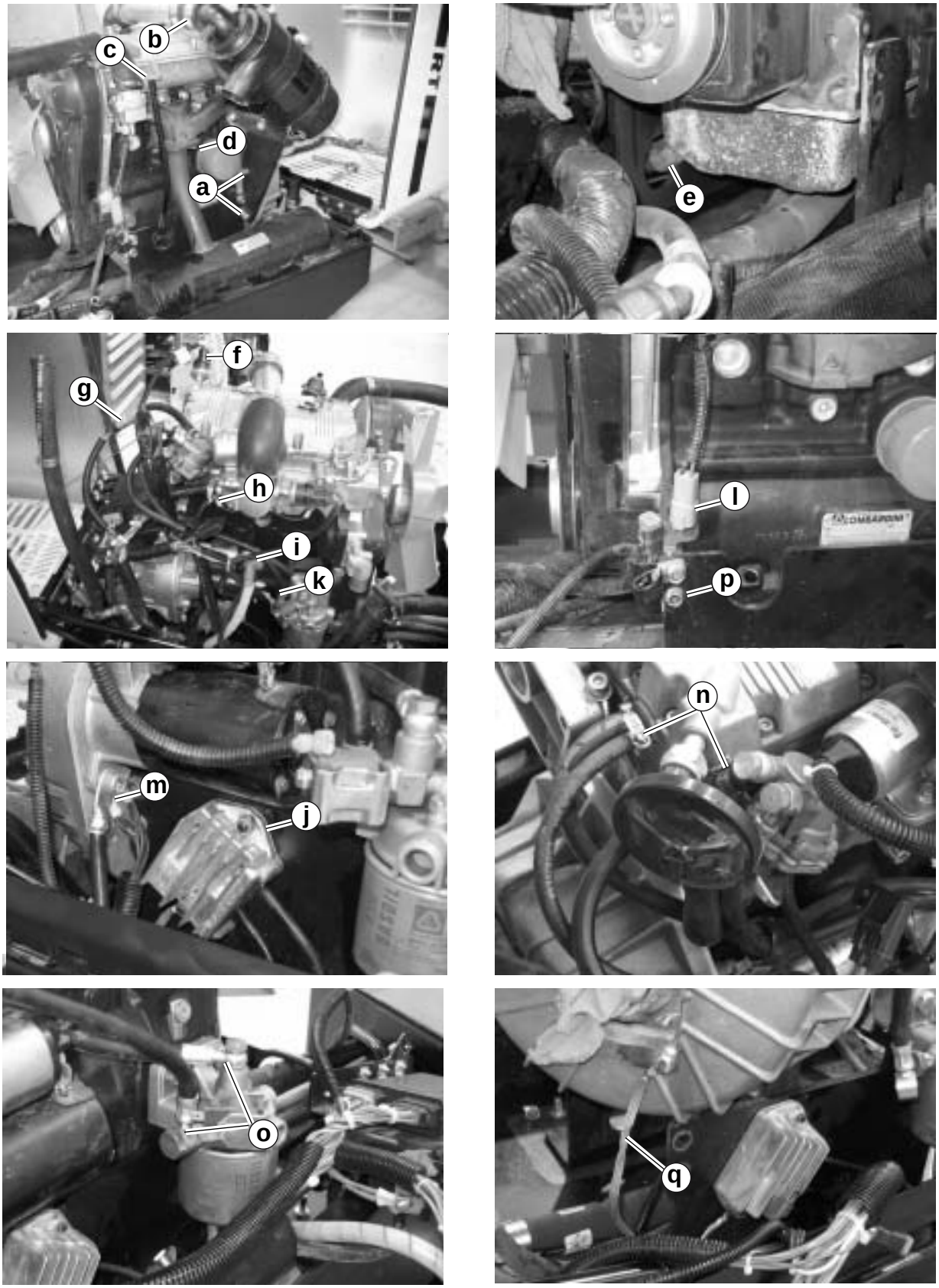

wc_gr002376

Installation:

8.31.17 Support the engine by the lifting eyes with an appropriate lift or hoist and position the engine over the machine frame. Connect the ground wire **(q)** leading to the voltage regulator. Lower the engine into the frame and secure it to the mounting brackets using four screws **(p)**.

8.31.18 Connect the oil drain tube **(e)** at the engine.

8.31.19 Connect the fuel hoses **(n)** at the fuel inlet. Also connect hoses at fuel filter **(o)**.

8.31.20 Connect the ground wires **(m)** at the starter mounting flange.

8.31.21 Connect the wiring harness at the oil pressure sensor **(f)**, throttle solenoid **(g)**, glow plugs **(h)**, starter **(i)**, voltage regulator **(j)**, and fuel solenoid **(k)**. On the opposite side of the engine, connect the coolant temperature sensor **(l)**.

8.31.22 Position the muffler inside the frame and secure it to the engine with two screws **(d)**.

8.31.23 Secure the dipstick with screw **(c)**.

8.31.24 Using hardware **(a)** secure the air cleaner bracket. The lower hardware also secures the muffler.

8.31.25 Connect the hose clamp **(b)**.

8.31.26 Secure the front hood cable at the lifting eye.

8.31.27 Remount the hydraulic pumps. See section *Replacing Hydraulic Pumps.*

8.31.28 Remount the radiator and shroud. See section *Replacing Radiator and Shroud.*

8.31.29 Fill engine with coolant.

8.31.30 Fill tank with hydraulic oil.

8.31.31 Fill engine with oil.

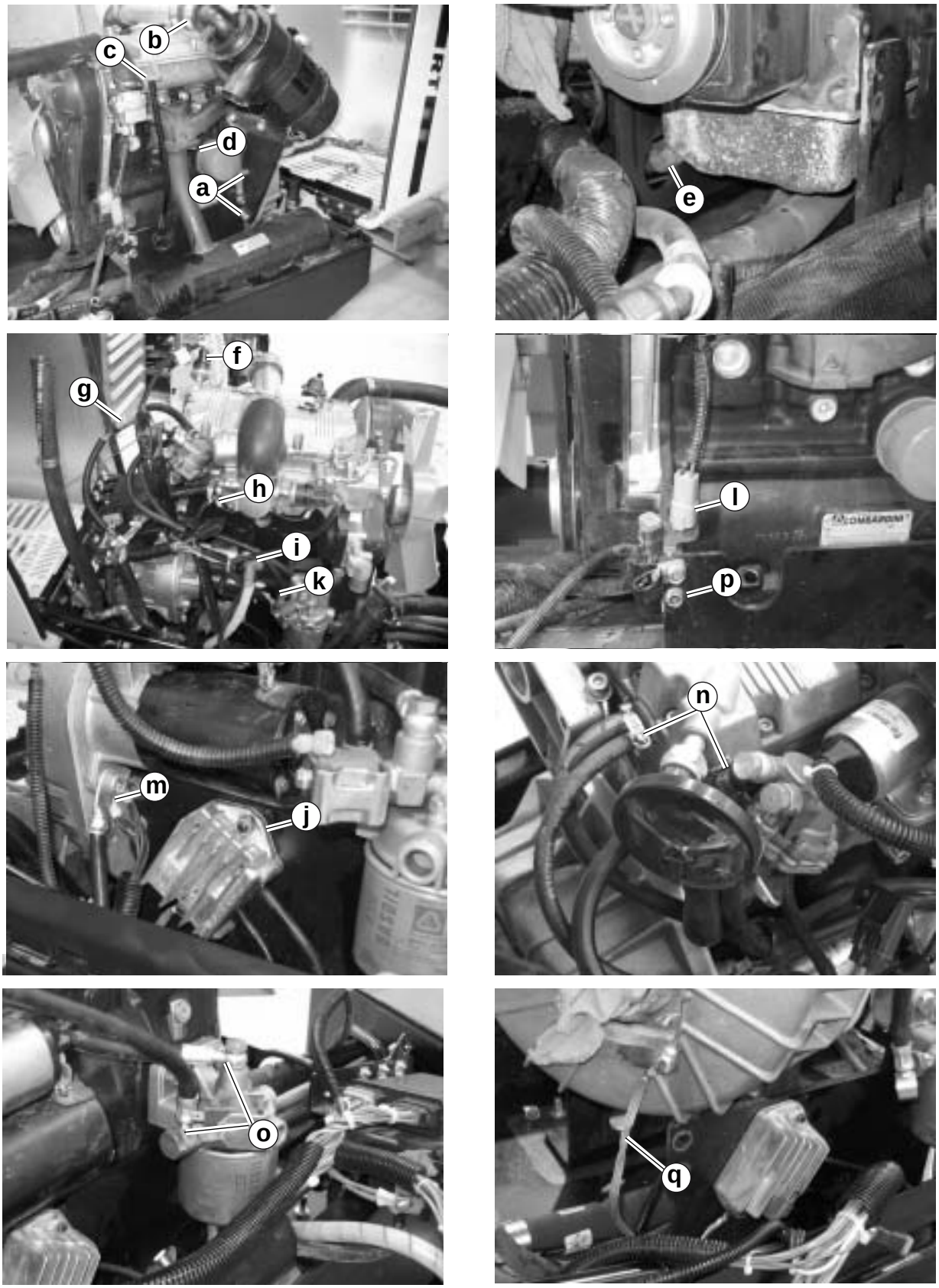

wc_gr002376

8.32 Engine Alternator

See Graphic: wc_gr002378

Removal:

8.32.1 Remove the exciter pump. See Section *Replacing Hydraulic Pumps.*

8.32.2 Remove the five screws **(a)** securing the flywheel to the engine and remove the flywheel.

8.32.3 Remove the six screws **(b)** securing the alternator assembly to the engine. Also remove the screw **(c)** securing the connector wire. Remove the connector from the wire. Slide the wire through the access hole and pull the alternator assembly from the engine.

Installation:

8.32.4 Position the alternator assembly on the engine.

8.32.5 Feed the connector wire through the access hole and secure it with screw **(c)**. Remount the connector end on the wire.

8.32.6 Secure alternator assembly to engine using six screws **(b)**.

8.32.7 Secure the flywheel to the engine using five screws. Torque screws to 82 Nm (60 ft.lbs).

8.32.8 Remount exciter pump.



wc_gr002378

9. Rebuilding Control Box

9.1 Removing/Rebuilding Joysticks

See Graphic: wc_gr002189

Disassembly:

9.1.1 Remove the four T10 Torx screws **(a)** and pull the joystick from control box.

9.1.2 Disconnect the connector **(b)**.

9.1.3 Unscrew the cap **(c)**. Remove the holding ring **(d)** and boot **(e)**.

9.1.4 Remove the two T8 Torx screws **(f)** and remove the housing bottom cover with circuit board **(g)**. Remove T6 Torx screws **(k)** and separate the circuit board from the housing bottom cover.

9.1.5 Remove the three T8 Torx screws **(h)** and remove the housing **(i)**.

9.1.6 Remove the brush assembly **(j)**.

Reassembly:

9.1.7 Position the brush assembly into the indent **(l)** of the joystick.

9.1.8 Secure the housing to the joystick.

9.1.9 Secure the circuit board to the housing bottom cover and secure the assembly to the housing.

9.1.10 Attach the boot, boot ring, and cap to the joystick.

9.1.11 Connect the connector.

9.1.12 Secure the joystick to the control box.

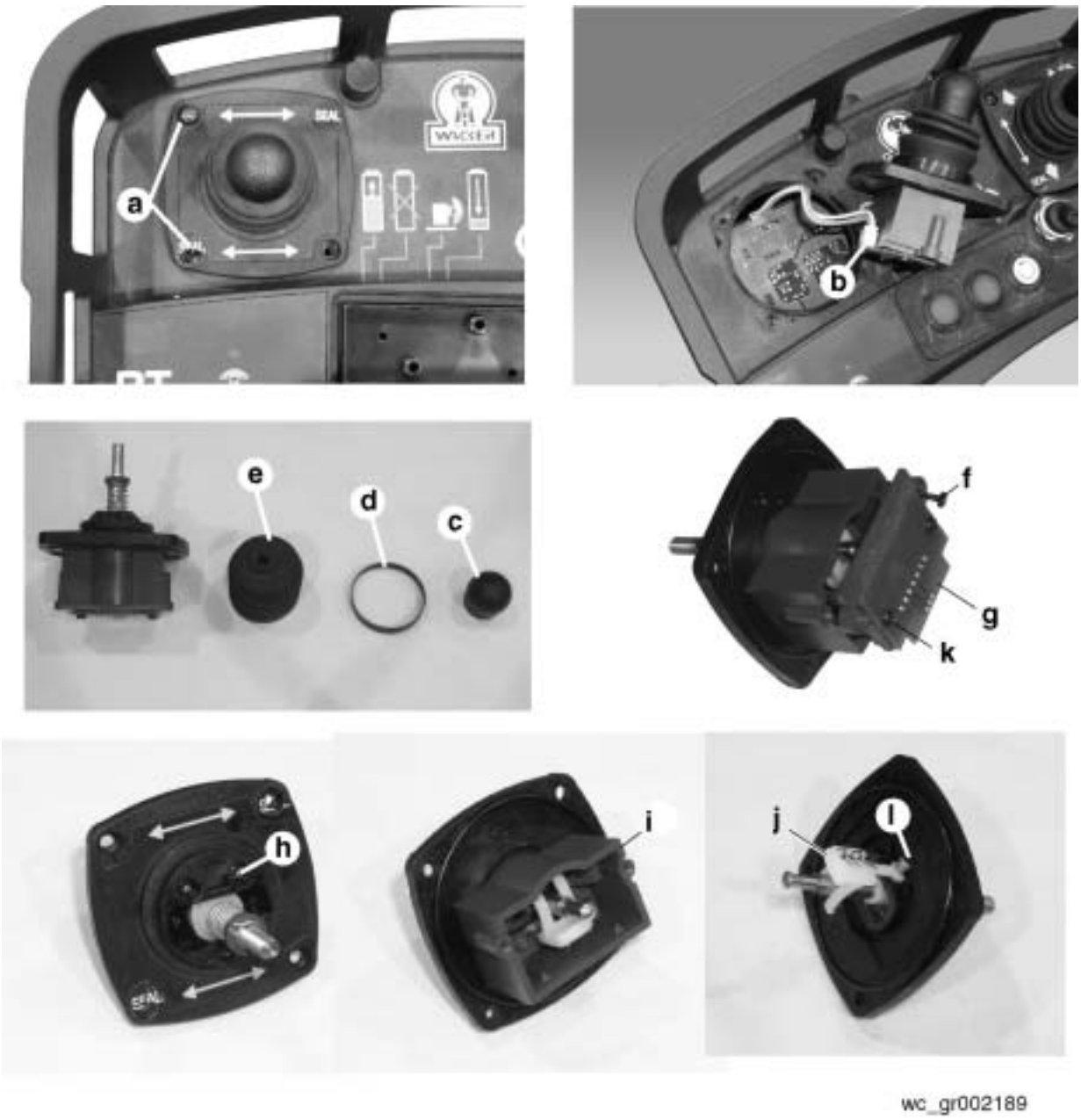

wc_gr002189

9.2 Removing and Installing Circuit Boards

See graphic wc_gr002182

Disassembly:

9.2.1 Remove the four T16 Torx screws and separate the control into its two halves.

9.2.2 Label the positions of the red **(a)**, brown **(b)**, and blue **(c)** wires and disconnect them. Also disconnect the charge plug connector **(d)**.

9.2.3 Remove the four T10 Torx screws **(e)** and lift off the primary card **(f)**.

9.2.4 Disconnect the joystick connectors **(g)**.

9.2.5 Remove the four T10 Torx screws **(h)** securing the secondary card **(i)** and lift off the secondary card.

9.2.6 Remove the retaining nut **(j)** and washer securing the ON/OFF switch **(k)**. Push the switch body through the control box cover. The primary/secondary card assembly **(l)** should now be free from the control box.

Reassembly:

9.2.7 Place the ON/Off switch into the control box cover. Secure the switch to the cover with washer and retaining nut.

9.2.8 Secure the secondary card to the control box.

9.2.9 Reconnect the joystick connectors.

9.2.10 Secure the primary card to the control box.

9.2.11 Reconnect the red, brown, and blue wires.

9.2.12 Reassemble the two halves of the control box.

9.2.13 Re-install the control box battery if removed.

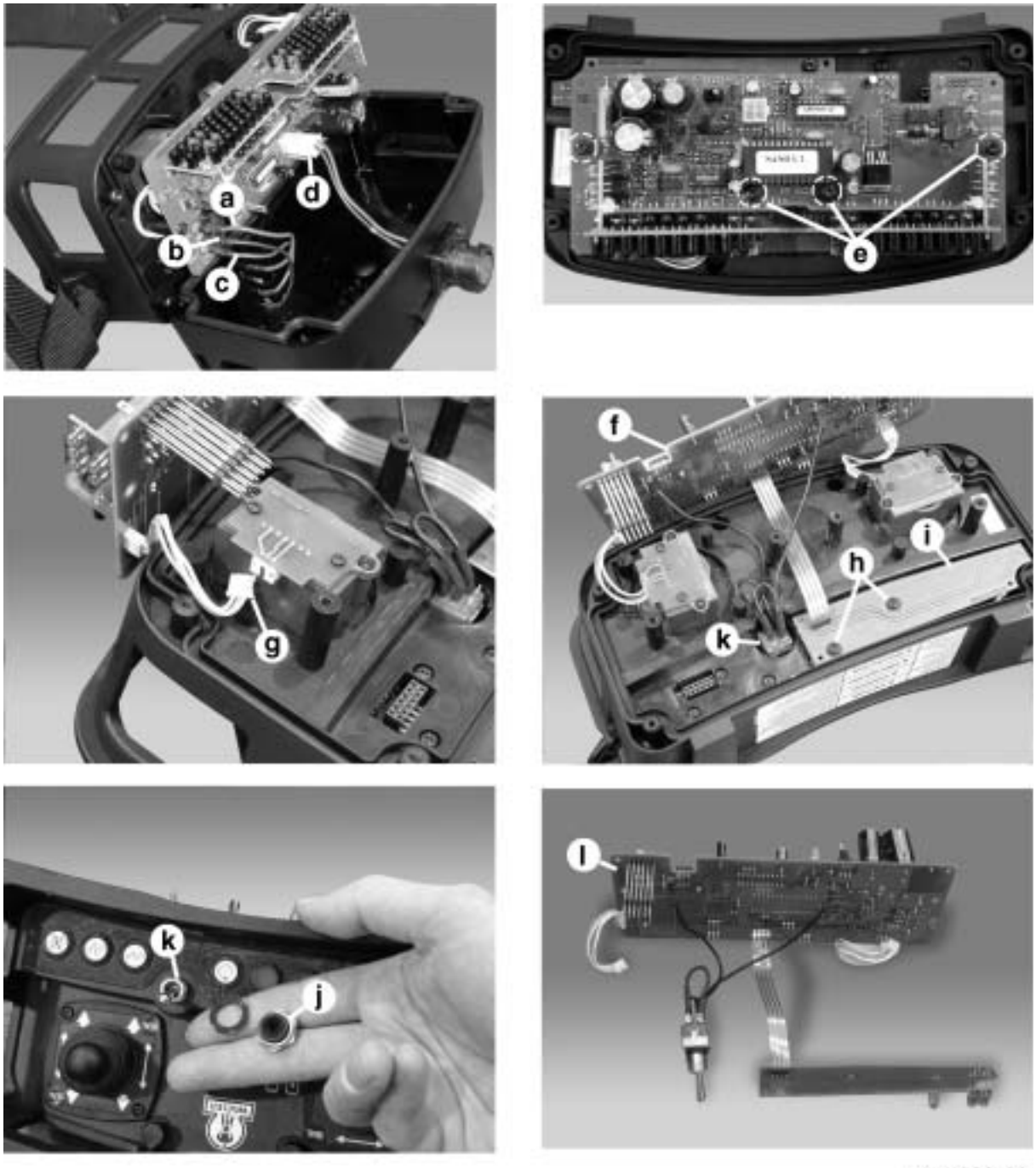

wc_gr002182

9.3 Removing & Testing Control Button Circuit Board

See Graphic: wc_gr002188

9.3.1 Remove primary/secondary card assembly.

9.3.2 Remove the six T10 Torx screws **(a)**. The button circuit board **(b)** is sealed with silicon and may require a small amount of force to break it loose from the silicon seal. To do so: Replace three or four of the screws back into the control box cover approximately one revolution. Tap on the screw heads to break the card from the silicon seal.

9.3.3 To test the card, check for continuity between the button **(c)** in question and common **(d)** while the button is being pressed. In the graphic, the engine crank button is being tested. If no continuity is measured, replace the button circuit board.

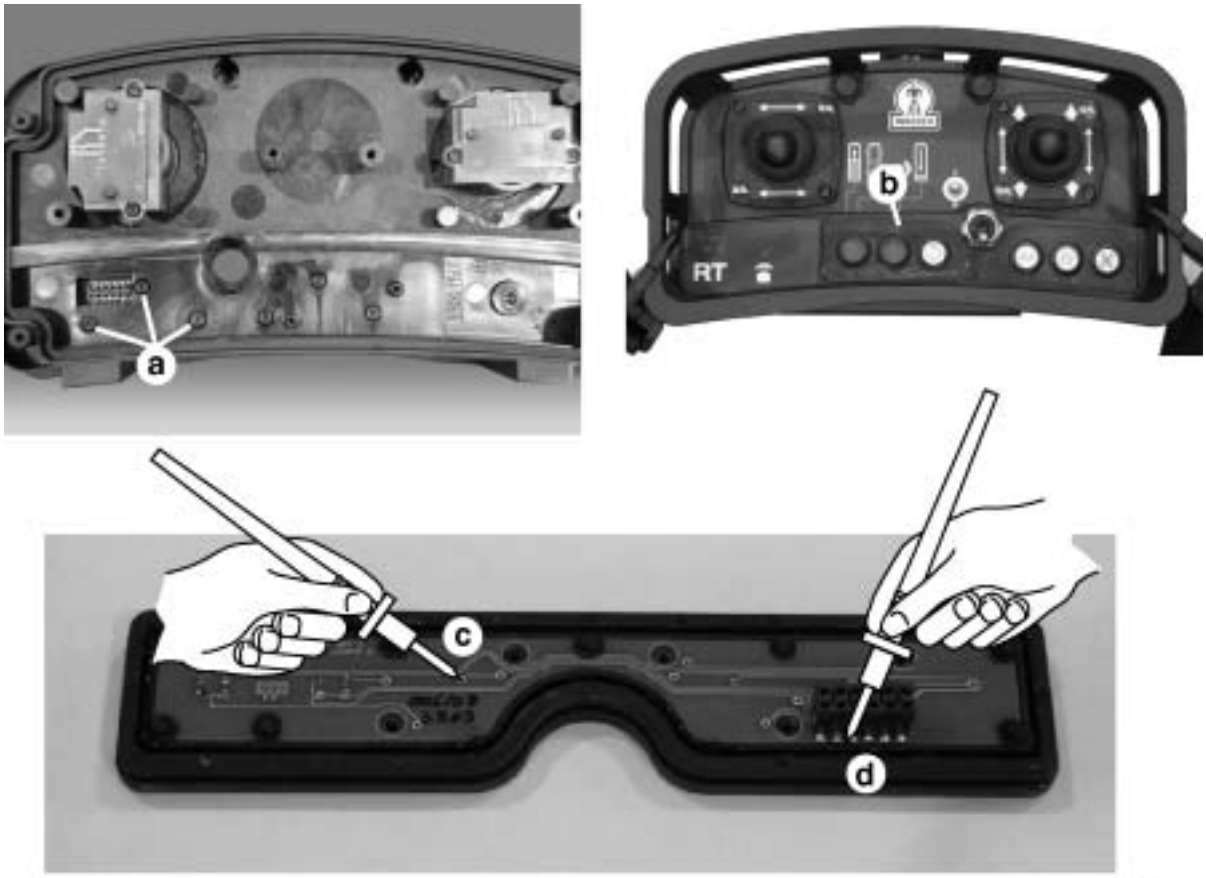

wc_gr002188

Threadlockers and Sealants

Threadlocking adhesives and sealants are specified throughout this manual by a notation of “S” plus a number (S#) and should be used where indicated. Threadlocking compounds normally break down at temperatures above 175°C (350°F). If a screw or bolt is hard to remove, heat it using a small propane torch to break down the sealant. When applying sealants, follow instructions on container. The sealants listed are recommended for use on Wacker equipment.

TYPE ( ) = Europe	COLOR	USAGE	PART NO. – SIZE
Loctite 222 Hernon 420 Omnifit 1150 (50M)	Purple	Low strength, for locking threads smaller than 6 mm (1/4”). Hand tool removable. Temp. range: -54 to 149°C (-65 to 300°F)	73287 - 10 ml
Loctite 243 Hernon 423 Omnifit 1350 (100M)	Blue	Medium strength, for locking threads larger than 6 mm (1/4”). Hand tool removable. Temp. range: -54 to 149°C (-65 to 300°F)	29311 - .5 ml 17380 - 50 ml
Loctite 271/277 Hernon 427 Omnifit 1550 (220M)	Red	High strength, for all threads up to 25 mm (1”). Heat parts before disassembly. Temp. range: -54 to 149°C (-65 to 300°F)	29312 - .5 ml 26685 - 10 ml 73285 - 50 ml
Loctite 290 Hernon 431 Omnifit 1710 (230LL)	Green	Medium to high strength, for locking preassembled threads and for sealing weld porosity (wicking). Gaps up to 0.13 mm (0.005”) Temp. range: -54 to 149°C (-65 to 300°F)	28824 - .5 ml 25316 - 10 ml
Loctite 609 Hernon 822 Omnifit 1730 (230L)	Green	Medium strength retaining compound for slip or press fit of shafts, bearings, gears, pulleys, etc. Gaps up to 0.13 mm (0.005”) Temp. range: -54 to 149°C (-65 to 300°F)	29314 - .5 ml
Loctite 545 Hernon 947 Omnifit 1150 (50M)	Brown	Hydraulic sealant Temp. range: -54 to 149°C (-65 to 300°F)	79356 - 50 ml
Loctite 592 Hernon 920 Omnifit 790	White	Pipe sealant with Teflon for moderate pressures. Temp. range: -54 to 149°C (-65 to 300°F)	26695 - 6 ml 73289 - 50 ml
Loctite 515 Hernon 910 Omnifit 10	Purple	Form-in-place gasket for flexible joints. Fills gaps up to 1.3 mm (0.05”) Temp. range: -54 to 149°C (-65 to 300°F)	70735 - 50 ml

Threadlockers and Sealants

Threadlockers and Sealants (continued)

Threadlocking adhesives and sealants are specified throughout this manual by a notation of “S” plus a number (S#) and should be used where indicated. Threadlocking compounds normally break down at temperatures above 175°C (350°F). If a screw or bolt is hard to remove, heat it using a small propane torch to break down the sealant. When applying sealants, follow instructions on container. The sealants listed are recommended for use on Wacker equipment.

TYPE ( ) = Europe	COLOR	USAGE	PART NO. – SIZE
Loctite 496 Hernon 110 Omnifit Sicomet 7000	Clear	Instant adhesive for bonding rubber, metal and plastics; general purpose. For gaps up to 0.15 mm (0.006”) Read caution instructions before using. Temp. range: -54 to 82°C (-65 to 180°F)	52676 - 1oz.
Loctite Primer T Hernon Primer 10 Omnifit VC Activator	Aerosol Spray	Fast curing primer for threadlocking, retaining and sealing compounds. Must be used with stainless steel hardware. Recommended for use with gasket sealants.	2006124-6 oz.

Torque Values

Metric Fasteners (DIN)

	TORQUE VALUES (Based on Bolt Size and Hardness)						**WRENCH SIZE**			
	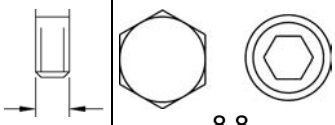 8.8		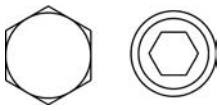 10.9		 12.9		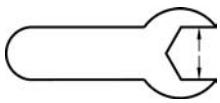			
Size	**Nm**	**ft.lb.**	**Nm**	**ft.lb.**	**Nm**	**ft.lb.**	**Metric**	**Inch**	**Metric**	**Inch**
M3	1.2	*11	1.6	*14	2.1	*19	5.5	7/32	2.5	–
M4	2.9	*26	4.1	*36	4.9	*43	7	9/32	3	–
M5	6.0	*53	8.5	6	10	7	8	5/16	4	–
M6	10	7	14	10	17	13	10	–	5	–
M8	25	18	35	26	41	30	13	1/2	6	–
M10	49	36	69	51	83	61	17	11/16	8	–
M12	86	63	120	88	145	107	19	3/4	10	–
M14	135	99	190	140	230	169	22	7/8	12	–
M16	210	155	295	217	355	262	24	15/16	14	–
M18	290	214	405	298	485	357	27	1-1/16	14	–
M20	410	302	580	427	690	508	30	1-1/4	17	–

1 ft.lb. = 1.357 Nm * = in.lb. 1 inch = 25.4 mm

Torque Values

Torque Values (continued)

Inch Fasteners (SAE)

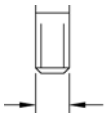					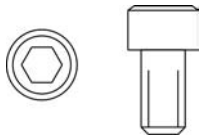		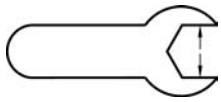			
Size	**Nm**	**ft.lb.**	**Nm**	**ft.lb.**	**Nm**	**ft.lb.**	**Metric**	**Inch**	**Metric**	**Inch**
No.4	0.7	*6	1.0	*14	1.4	*12	5.5	1/4	–	3/32
No.6	1.4	*12	1.9	*17	2.4	*21	8	5/16	–	7/64
No.8	2.5	*22	3.5	*31	4.7	*42	9	11/32	–	9/64
No.10	3.6	*32	5.1	*45	6.8	*60	–	3/8	–	5/32
1/4	8.1	6	12	9	16	12	–	7/16	–	3/32
5/16	18	13	26	19	33	24	13	1/2	–	1/4
3/8	31	23	45	33	58	43	–	9/16	–	5/16
7/16	50	37	71	52	94	69	16	5/8	–	3/8
1/2	77	57	109	80	142	105	19	3/4	–	3/8
9/16	111	82	156	115	214	158	–	13/16	–	–
5/8	152	112	216	159	265	195	24	15/16	–	1/2
3/4	271	200	383	282	479	353	–	1-1/8	–	5/8

1 ft.lb. = 1.357 Nm * = in.lb. 1 inch = 25.4 mm

Wacker Construction Equipment AG · Preußenstraße 41 · D-80809 München · Tel.: +49-(0)89-3 54 02 - 0 · Fax: +49 - (0)89-3 54 02-3 90
Wacker Corporation · P.O. Box 9007 · Menomonee Falls, WI 53052-9007 · Tel. : (262) 255-0500 · Fax: (262) 255-0550 · Tel. : (800) 770-0957
Wacker Asia Pacific Operations · Skyline Tower, Suite 2303, 23/F · 39 Wang Kwong Road, Kowloon Bay, Hong Kong · Tel. +852 2406 60 32 · Fax: +852 2406 60 21