www.wackergroup.com

0088433	002
0699	en

Roller

RT 560
RT 820

REPAIR MANUAL



Operating Information

You must be familiar with the operation of this machine before you attempt to troubleshoot or make any repairs to it. Basic operating and maintenance procedures are described in the owner's manual supplied with the machine. The owner's manual should be kept with the machine. If it becomes lost, please contact WACKER Corporation to order a replacement.

Damage caused by misuse or neglect of the unit should be brought to the attention of the operator, to prevent similar occurrences from happening in the future.

Engine Repair Information

Service information for the engine is available in the engine manufacturer's owner and repair manuals. The owner's manual was included with the machine at the time of its shipment from the factory. The repair manual can be obtained from the engine manufacturer, or it can be ordered through WACKER Corporation using the part number and description:

Lombardini Model 12LD Repair Manual
WACKER P/N **85095**

Engine manuals are dependent on the manufacturer's supply and prices in effect at time of order. Information contained in these manuals is the sole responsibility of the engine manufacturer, unless otherwise specified.

Parts Information

A Parts Manual was supplied with the machine at the time of its shipment from the factory. Replacement copies are available by contacting WACKER Corporation. Please supply machine serial number when ordering manuals.

Safety Messages

The procedures described in this manual contain NOTES, CAUTIONS, and WARNINGS which must be followed to prevent the possibility of improper service, damage to the equipment, or personal injury.

Notes: *Notes appear in italics and contain additional information important to a procedure.*

CAUTION: Cautions provide information important to prevent errors which could damage machine or components.

WARNING

Warnings inform of conditions or practices which could lead to personal injury or death!

This Manual covers machines with
Serial Numbers beginning:

6594, 6784, 7166, 7167, 7506 - RT 560
6595, 6785, 7172, 7173, 7507, 8047 - RT 820

THE INFORMATION CONTAINED IN THIS MANUAL WAS BASED ON MACHINES IN PRODUCTION AT THE TIME OF PUBLICATION.
WACKER CORPORATION RESERVES THE RIGHT TO CHANGE ANY PORTION OF THIS INFORMATION WITHOUT NOTICE.

Identification Plate

An identification plate listing the Model Number and Serial Number is attached to each machine and is located inside on the control panel. This plate should not be removed from the machine.

Please record the information found on this plate so it will be available should the identification plate become lost or damaged. When ordering parts or requesting service information you will always be asked to specify the model and serial number of the unit.

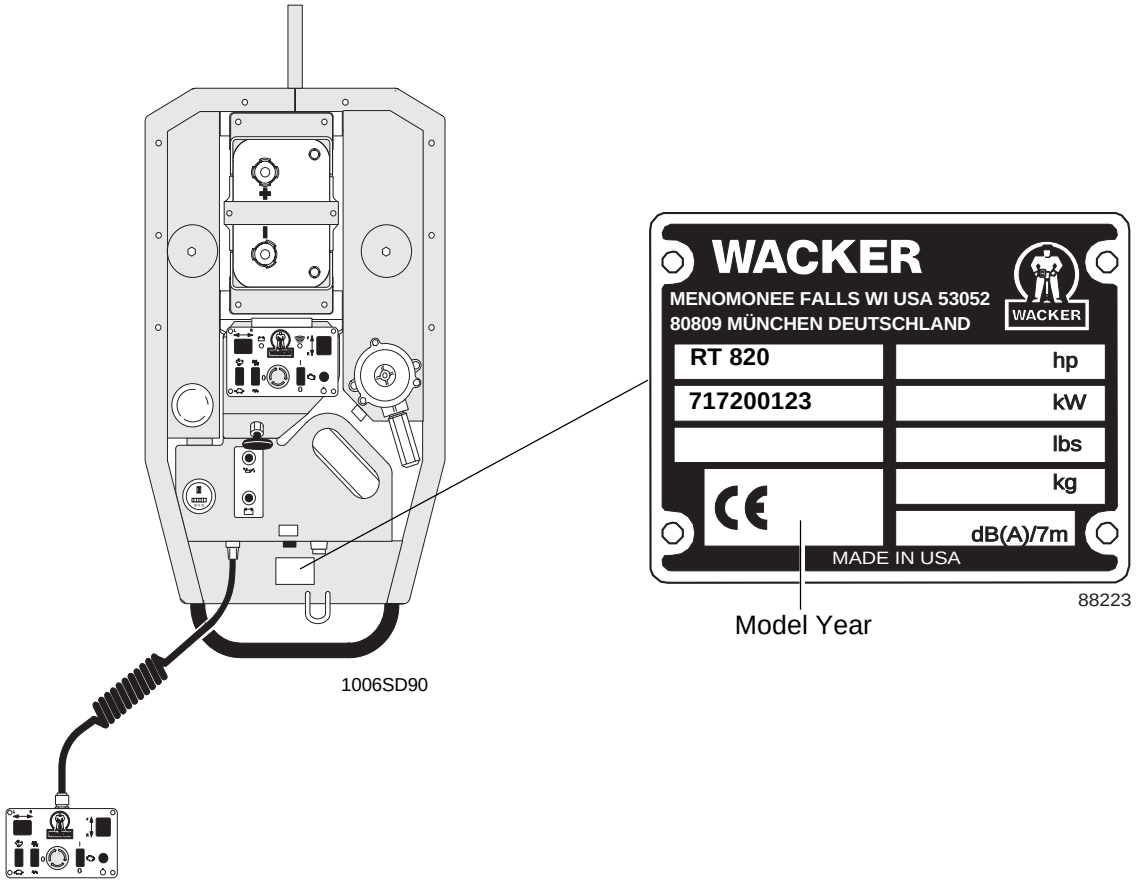

Serial Number

The serial number found on the identification plate is a nine digit number. The first four digits identify the specific machine model (Bill of Material). The last five numbers indicate the production sequence for that model.

7172 00123

Production Sequence

Model Identification

The serial number identifies your machine and will ensure that you receive the correct replacement parts.

UNIT 1 - SAFETY

1.1 General Precautions 1-1
1.2 Operating Safety 1-2
1.3 Engine Safety 1-2
1.4 Service & Repair Safety 1-3
1.5 Lifting Machine 1-3

UNIT 2 - GENERAL

2.1 Engine Specifications 2-1
2.2 Roller Specifications 2-2
2.3 Lubrication Specifications 2-2
2.4 Hydraulic Pressures 2-2
2.5 Operating Systems 2-3
2.6 Reference Numbers ( ) 2-3
2.7 Replacement Parts 2-3
2.8 Controls & Service Locations 2-4
2.9 General Operation 2-6
2.10 Exciter Operation 2-7
2.11 Engine Speed & Machine Performance 2-8

UNIT 3 - HYDRAULIC SYSTEM

3.1 Hydraulic System Cleanliness 3-1
3.2 Hydraulic Oil Requirements 3-1
3.3 Hydraulic Flow Diagram 3-2
3.4 Hydraulic System 3-3
3.5 Control Valve Block 3-4
3.6 Hydraulic Schematic 3-5
3.7 High Speed Travel Circuit 3-6
3.8 Low Speed Travel Circuit 3-8
3.9 Exciter Circuit 3-10
3.10 Steering Circuit 3-12
3.11 Checking Hydraulic Pressures 3-14
3.12 Checking Drive Circuit 3-14
3.13 Checking Vibration Circuit 3-15
3.14 Checking Steering Circuit 3-16
3.15 Testing Drive & Exciter Circuit Relief Valves 3-16
3.16 System Pressures 3-16
3.17 Hydraulic Hose Routing and Location 3-18

UNIT 4 - DRUM

4.1 Introduction 4-1
4.2 Changing Oil 4-1
4.3 Drum Assembly - Exploded View 4-2
4.4 Drums 4-3
4.5 Drum Support Cover 4-4
4.6 Drive Bearings & Seals 4-5
4.7 Drivecase 4-6
4.8 Drivecase - Exploded View 4-7
4.9 Brake (S/N 7100 00000 & Above) 4-8
4.10 Servicing Brake 4-9
4.11 Drive Motor 4-10
4.12 Drivecase Components 4-11

UNIT 5 - EXCITER ASSEMBLY

5.1 Introduction 5-1
5.2 Oil Requirements 5-1
5.3 Exciter Assembly - Exploded view 5-2
5.4 Exciter Cross Section 5-4
5.5 Removing and Servicing Exciter Assembly 5-5
5.6 Exciter Motor, Coupling & Pinion Gear 5-8
5.7 Exciter Motor 5-10

UNIT 6 - FRAME

6.1 Shockmount Installation - Exploded View 6-1
6.2 Replacing Shockmounts 6-2
6.3 Hydraulic Hose Clamps 6-4
6.4 Drum Supports 6-5
6.5 Articulated Joint & Steering Cylinder - Exploded View 6-7
6.6 Articulated Joint 6-8
6.7 Steering Cylinder 6-10

UNIT 7 - POWER TAKE-OFF

7.1 Drive Pump & Coupling - Exploded View 7-2
7.2 Pump & Coupling Installation 7-3
7.3 General Description 7-4
7.4 Engine 7-4

UNIT 8 - ELECTRICAL SYSTEM

8.1 Introduction 8-1
8.2 Troubleshooting 8-1
8.3 Cord Operated System (S/N 6800 00000 & Below) 8-2
8.4 Infra-red Operated System (S/N 6800 00000 & Below) 8-3
8.5 Infra-red & Cable Operated System (S/N 7100 00000 & Above) 8-4

Wiring Schematics - S/N 6800 00000 & Below

8.6 Schematic - Cable Operated Control Box 8-5
8.7 Schematic - Infra-red Transmitter 8-6
8.8 Schematic - Cord Operated System 8-7
8.9 Schematic - Infra-red & Cord Operated System 8-8

Wiring Schematics - S/N 7100 00000 & Above

8.10 Schematic - Cord Operated Control Box 8-9
8.11 Schematic - Infra-red Transmitter 8-10
8.12 Schematic - Machine Wiring 8-11
8.13 Schematic - Engine Wiring 8-12

UNIT 1

SAFETY

1.1 General Precautions 1-1
1.2 Operating Safety 1-2
1.3 Engine Safety 1-2
1.4 Service & Repair Safety 1-3
1.5 Lifting Machine 1-3

1.1 General Precautions

For your protection, the protection of others, and to prevent damage to the unit, read, understand, and follow all safety instructions. Failure to follow the safety notes listed below could cause damage to the equipment or result in personal injury.

NEVER allow unfamiliar or inexperienced personnel to operate the machine.

NEVER operate a unit in need of service or repair except for service testing.

NEVER operate a unit with a safety device or guard removed.

NEVER operate with fuel cap loose or missing.

NEVER leave machine running unattended.

NEVER modify the equipment without express written approval of the manufacturer.

NEVER run machine indoors or in areas with limited ventilation unless sufficient ventilation or exhaust hoses can be provided.

ALWAYS dress appropriately for job conditions and wear specified safety devices such as a hard hat, goggles, and ear protection where required.

ALWAYS keep hands, feet, and clothing away from moving parts when operating or servicing equipment.

ALWAYS turn engine off when leaving machine unattended.

ALWAYS drain fuel tank when transporting machine long distances.

ALWAYS replace all missing and hard-to-read decals.

ALWAYS check and tighten all external fasteners at regular intervals.

1.2 Operating Safety

WARNING

Familiarity and proper training are required for the safe operation of mechanical equipment !

Equipment operated improperly or by untrained personnel can be dangerous! Read the operating instructions and familiarize yourself with the location and use of all controls before attempting to operate or repair this equipment. An inexperienced operator should receive instruction from someone familiar with the equipment before being allowed to operate it.

Before starting and while operating machine:

1. Make sure all safety devices and guards are in place before starting machine! **Do not** operate machine with safety devices or guards missing or inoperative.
2. Immediately after start-up, check that all controls are functioning properly! **Do not** operate machine unless all controls operate correctly.
3. Check that articulated joint lock is released and properly stored before operating machine! Machine cannot be steered when lock is set.
4. If machine must be parked on an incline, block drums to prevent rolling.
5. Look behind you when operating roller in reverse! **Never** assume it is clear behind you.
6. Remain aware of the changing positions and movement of other equipment and personnel on the jobsite!

1.3 Engine Safety

Internal combustion engines present special hazards during operation and fueling. Failure to follow the safety practices described below could result in severe injury or death.

WARNING

DO NOT operate engine in an enclosed area or an area with limited ventilation. Exhaust fumes contain carbon monoxide, a deadly gas!

DO NOT fill tank near open flame or while smoking!

DO NOT fill fuel tank if engine is hot or while engine is running!

DO NOT spill fuel while filling tank or run engine if an odor of fuel is present! If fuel is spilled, wait until it has evaporated or move the machine away from the spill before running engine!

DO NOT touch or lean against hot exhaust pipes or engine cylinder!

1.4 Service & Repair Safety

The service procedures contained in this manual are intended for use by an individual equipped with the proper tools and equipment, and familiar with safe shop practices.

Should questions arise during the service or repair of this equipment, please contact your area WACKER Corporation Service Department for assistance! WACKER Corporation maintains a staff of trained service specialists to answer your questions and provide assistance and training.

WARNING

BEFORE attempting to lift or jack up this machine, engage the locking device at the articulated joint! This will prevent the front and rear machine halves from swinging together. Failure to lock joint could result in a serious crushing injury! *See Section 1.5.*

WARNING

DO NOT open hydraulic lines or loosen hydraulic connections while engine is running! Hydraulic fluid under pressure can penetrate the skin, cause burns, blind you, or create other potentially dangerous hazards. Set all controls in neutral and turn engine off before loosening hydraulic fittings or attaching test gauges.

1.5 Lifting Machine

The service procedures in this manual call for the articulated joint to be locked before lifting or jacking machine up. To lock the front and rear machine halves together, place the locking bar **(b)** or the locking pin **(a)** in the position shown. Secure locking bar in position with cotter pin.

When lifting machine, place a sling or chain through the lifting eye **(c)** on the machine. Always check to make sure the lifting device has enough weight-bearing capacity to lift the machine safely.

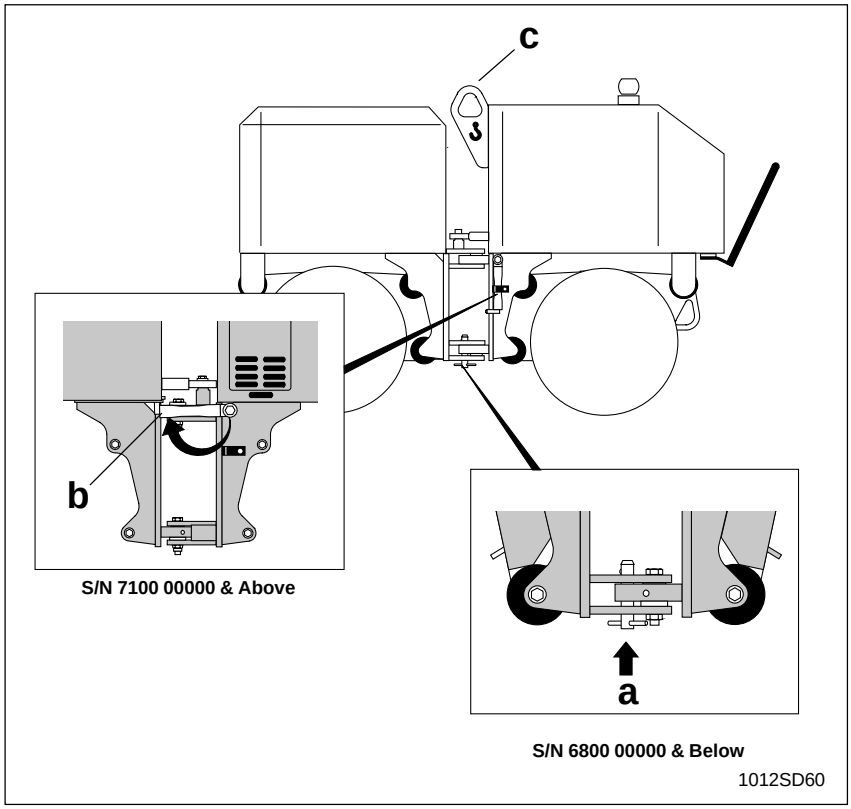

FIG. 1-1 LIFTING EYE & LOCKING POINTS

NOTES

UNIT 2

General

2.1 Engine Specifications 2-1
2.2 Roller Specifications 2-2
2.3 Lubrication Specifications 2-2
2.4 Hydraulic Pressures 2-2
2.5 Operating Systems 2-3
2.6 Reference Numbers ( ) 2-3
2.7 Replacement Parts 2-3
2.8 Controls & Service Locations 2-4
2.9 General Operation 2-6
2.10 Exciter Operation 2-7
2.11 Engine Speed & Machine Performance 2-8

2.1 Engine Specifications

Engine Type		Two cylinder, 4-cycle, air cooled, diesel engine	
Engine Make		Lombardini	Lombardini
Engine Model		12LD475-2	12LD435-2
Power @ 3000 rpm	Hp (kW)	20 (15)	16 (12)
Displacement-total	in^3 (cm^3)	58 (950)	53.3 (872)
Operating Speed	rpm	2600 ± 100	2600 ±100
Alternator	V / Amp	12 / 16.5 @ 2600 rpm	12 / 12.5 @ 2600 rpm
Battery	type	12V - Sealed - 800 cold starting amps	
Air Cleaner	type	Dry pleated paper element	
Valve Clearance - in/ex	in.(mm)	.006 -.008 (0.15-0.20)	
Fuel	type	No. 2 Diesel	
Fuel Consumption	gal.(l)/hr.	1.1 (4.2)	
Fuel Tank Capacity	gal. (l)	5.6 (21)	
Engine Oil	type	SAE 15W40 CD Rated	
Engine Oil Capacity	qts. (l)	2.5 (2.5)	

2.2 Roller Specifications

		RT 560	RT 820
Overall Dimensions (l x w x h)	in. (mm)	80 x 22 x 48 (2030 x 560 x 1220)	80 x 32 x 48 (2030 x 820 x 1220)
Operating Weight	lb.(kg)	2830 (1283)	3020 (1370)
Area Capacity	ft² (m²) / hr.	7500 (690)	10900 (1016)
Inside Turning Radius	in. (m)	63 (1.6)	58 (1.5)
Low Speed	ft. (m)/min.	68 (21)	
High Speed	ft. (m)/min.	136 (41)	
Vibration Frequency	vpm (Hz)	2400 (40)	
Gradeability with vibration	%	50	
Gradeability without vibration	%	55	

2.3 Lubrication Specifications

	Type	Quantity
Hydraulic System	SAE 10W30 - Hydraulic Fluid	10.5 gal. (40 litres)
Exciter	SAE 10W30	32 oz. (950 ml)
Drum Drive Gearcase	SAE 10W30	8 oz. (240 ml)
Articulated Joint	Shell Alvania No. 2	As required
Steering Cylinder	Shell Alvania No. 2	As required

2.4 Hydraulic Pressures

	Normal Operating Pressure @ 2600 RPM PSI (mPa) [1]	**Relief Valve Pressure PSI (mPa)**	**Test Port Location**
Forward or Reverse in LOW Speed	180 - 600 (1.2 - 4.2)	3000 (21)	Rear Pump
Forward or Reverse in HIGH Speed	300 - 800 (2.1 - 5.6)	3000 (21)	Front Pump
Exciter in LOW Vibration	1050 - 1250 (7.3 - 8.7)	3000 (21)	Front Pump
Exciter in HIGH Vibration	1200 - 1600 (8.4 - 11.2)	3000 (21)	Front Pump
Steering	300 - 800 (2.1 - 5.6) 300 - 1200 (2.1 - 8.4)	1000 (7)	Rear Pump Front Pump

[1] Refer to Unit 3 - Hydraulic System. Pressure readings will be higher when operating in loose soil or when on an incline. Pressure readings will be ower when operating on a flat, hard surface.

2.5 Operating Controls

There are two types of operating controls in use on the RT Roller.

1. Serial numbers beginning 6594, 6595, 6784, 6785 use a ***Joystick Control***. This system uses a single joystick controller **(a)** to control machine movement.

2. Serial numbers beginning 7166, 7167, 7172, 7173, 7506, 7507 use a ***Dual Lever Control***. This system features two separate switches **(b)** to control machine movement and includes an emergency stop button **(c)**. Additional features provided on these units include an oil cooler and hydraulic parking brake.

Machine versions can be identified by the type of control box being used, as well as by the serial number of the unit. When following repair instructions or calling for information know the serial number of the unit.

See *Section 2.8 - Controls and Service Location*s for more detailed machine identification.

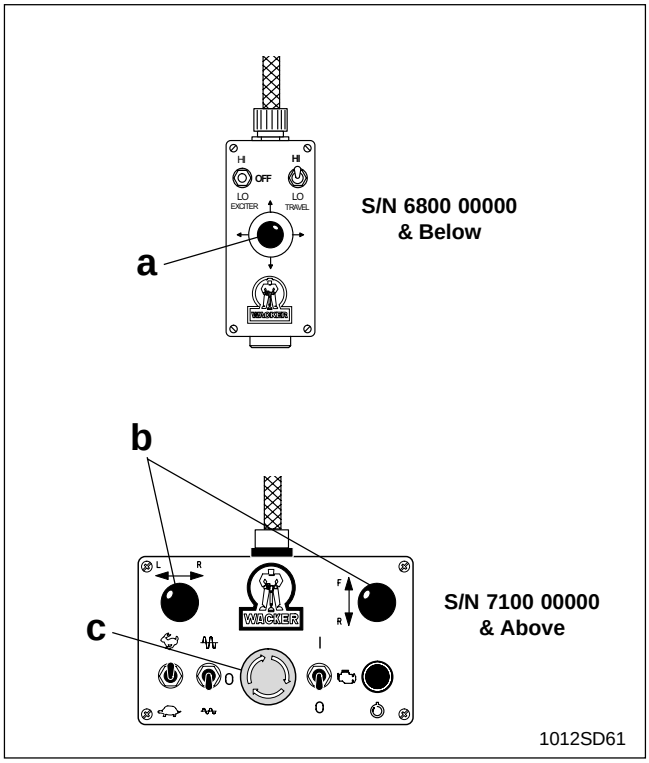

FIG. 2-1 IDENTIFYING OPERATING SYSTEMS

2.6 Reference Numbers ( )

Repair procedures may contain reference numbers enclosed in parentheses ( ). These numbers refer to the item numbers shown on the assembly drawings located within that repair section. They are included to aid the mechanic in identifying parts and assembling components.

2.7 Replacement Parts

The repair procedures contained in this manual do not include part numbers. For parts replacement information, refer to the Parts Manual included with the machine. When ordering replacement parts, please list model and serial number of machine.

2.8 Controls & Service Locations

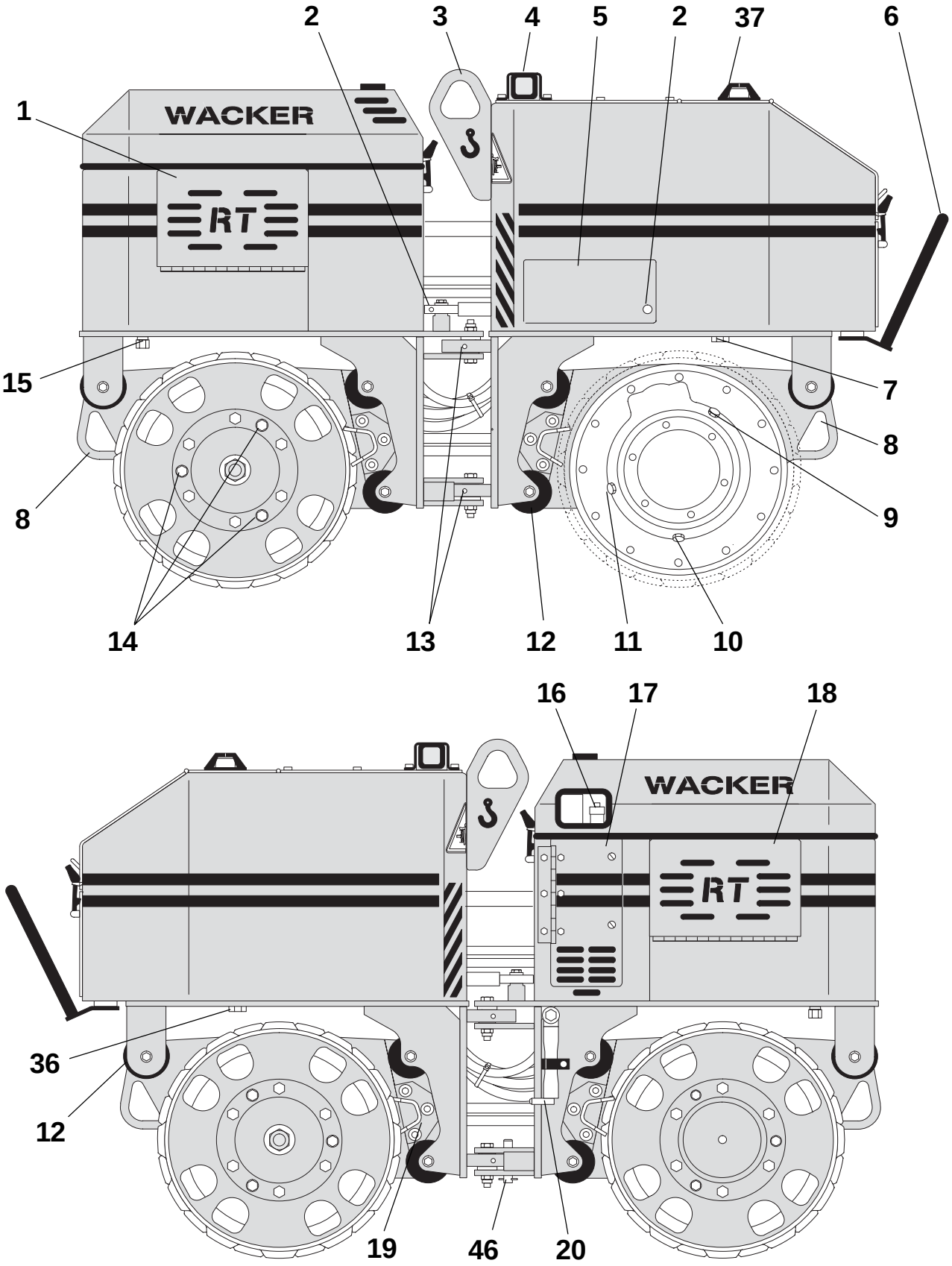

1006SD89

1 Oil Dipstick & Fuel Filter Access Door
2 Steering Cylinder Grease Fittings
3 Lifting Eye
5 Steering Cylinder Access Panel
6 Safety Back-up Bar
7 Fuel Tank Drain Plug (Recessed)
8 Tie Down Lugs
9 Drivecase Fill Plug
10 Drivecase Drain Plug
11 Oil Level Plug
12 Shockmount
13 Articulated Joint Grease Fitting
14 Drum Pusher Holes
15 Engine Oil Drain Plug
18 Oil Filter Access Door
19 Scraper Bar
21 Battery
22 Fuel Tank Vent
23 Fuel Cap
28 Hydraulic Tank Vent
29 Hydraulic Tank Return Filter & Fill Port
30 Hydraulic Oil Level Sight Gauge
33 Padlock Ring
36 Hydraulic Tank Drain Plug
37 Infra-red Remote Control Receiving Eye (Infra-red Option)

S/N 7100 00000 & Above
4 Power On Indicator Light
16 Filter Indicator for Air Cleaner
17 Air Cleaner Access Door
20 Articulated Joint Locking Bar
24 Engine Throttle Control
25 Engine Oil Pressure Warning Light
26 Hour Meter
27 Charging System Warning Light
31 Control Box Storage Area
32 Key Switch
34 Glow Plug Button
35 Cable-operated Control Box (Dual Lever)
38 Infra-red Remote Control Transmitter

S/N 6800 00000 & Below
39 Throttle Control
40 Remote Control Selector Switch
41 Remote Control Indicator Light
42 Hour Meter
43 Charging System Warning Light
44 Engine Oil Pressure Warning Light
45 Cable operated Control Box (Joystick)
46 Articulated Joint Locking Pin

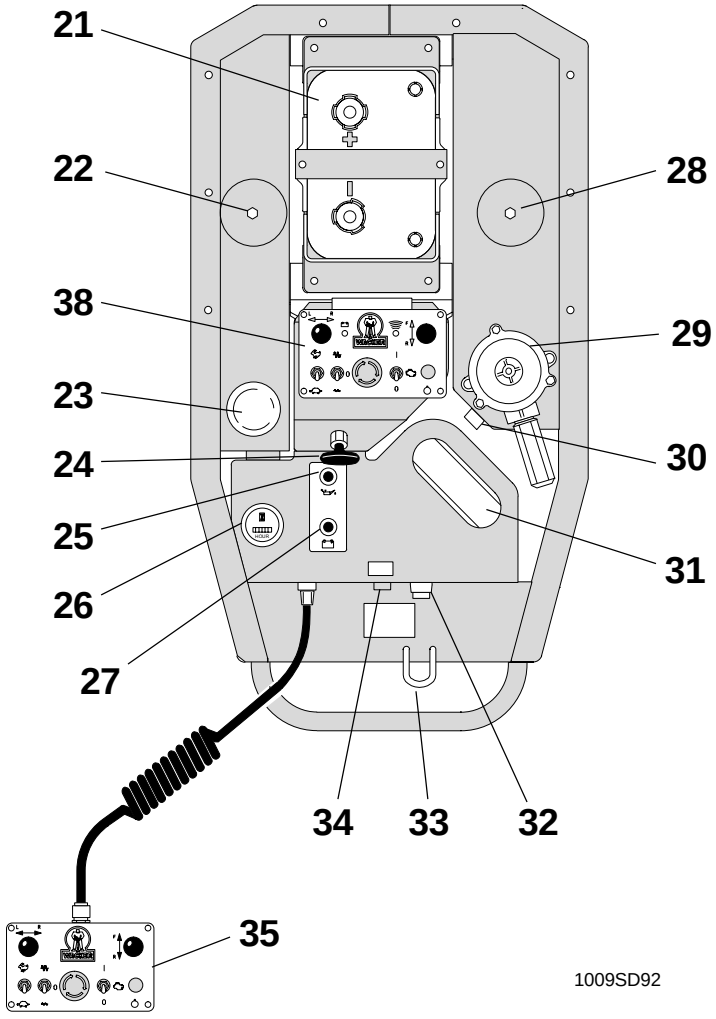

1009SD92

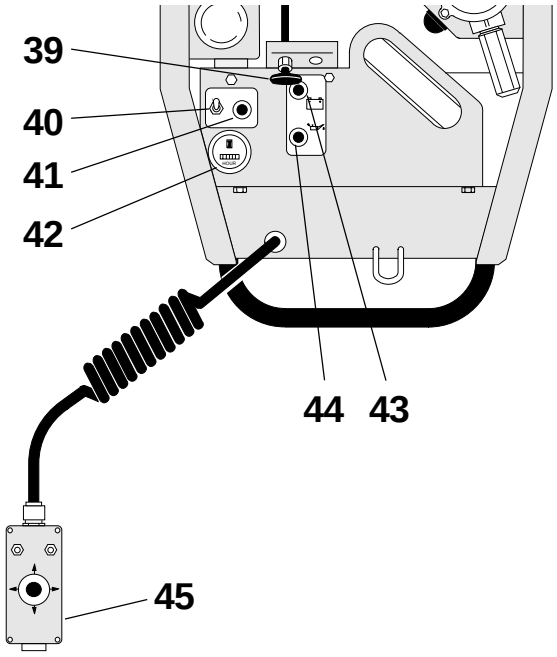

1012SD62

2.9 General Operation

The machine is powered by a two cylinder, air-cooled, Lombardini diesel engine **(f)**. The engine drives two hydraulic pumps **(e)** mounted in tandem and connected to the engine drive shaft through a three-piece coupling **(g)**. Each pump is equipped with a quick disconnect for easy installation of test gauges for checking pressures and troubleshooting.

Hydraulic pressure developed by the pumps flows to the manifold block **(m)** where it is directed to the hydraulic motors by a bank of solenoid operated control valves **(l)**. The solenoids are actuated by an electronic relay **(j** or **k)** which receives and interprets the incoming signal originating at the operator's controls.

The operator can control the machine through either a cable-connected control box or an optional wireless infra-red transmitter.

The front and rear drums include an exciter assembly **(a)**, drum drive gearcase, drive motor **(b)** and exciter motor **(d)**. Each drum is shockmounted **(h)** to the machine frame in six places to reduce vibration to the upper machinery and improve the service life of components.

The drum drive motor **(b)** is mounted to the drum drive gearcase and engages with the drive gear through a pinion gear. Hydraulic flow to the drive motors is controlled by the main manifold **(m)** to provide two travel speeds: high speed for transport and low speed for compaction.

S/N 7100 00000 & Above

These units include a **S**pring **A**pplied **H**ydraulically **R**eleased (SAHR) parking brake **(c)** located inside the front drum. The brake is normally engaged and only becomes disengaged when the machine is running and hydraulic pressure is present at the brake valve **(i)**. The brake automatically engages when the engine is turned off. It can also be manually set during machine operation by pushing in the emergency stop button on the control box which electrically releases the brake valve.

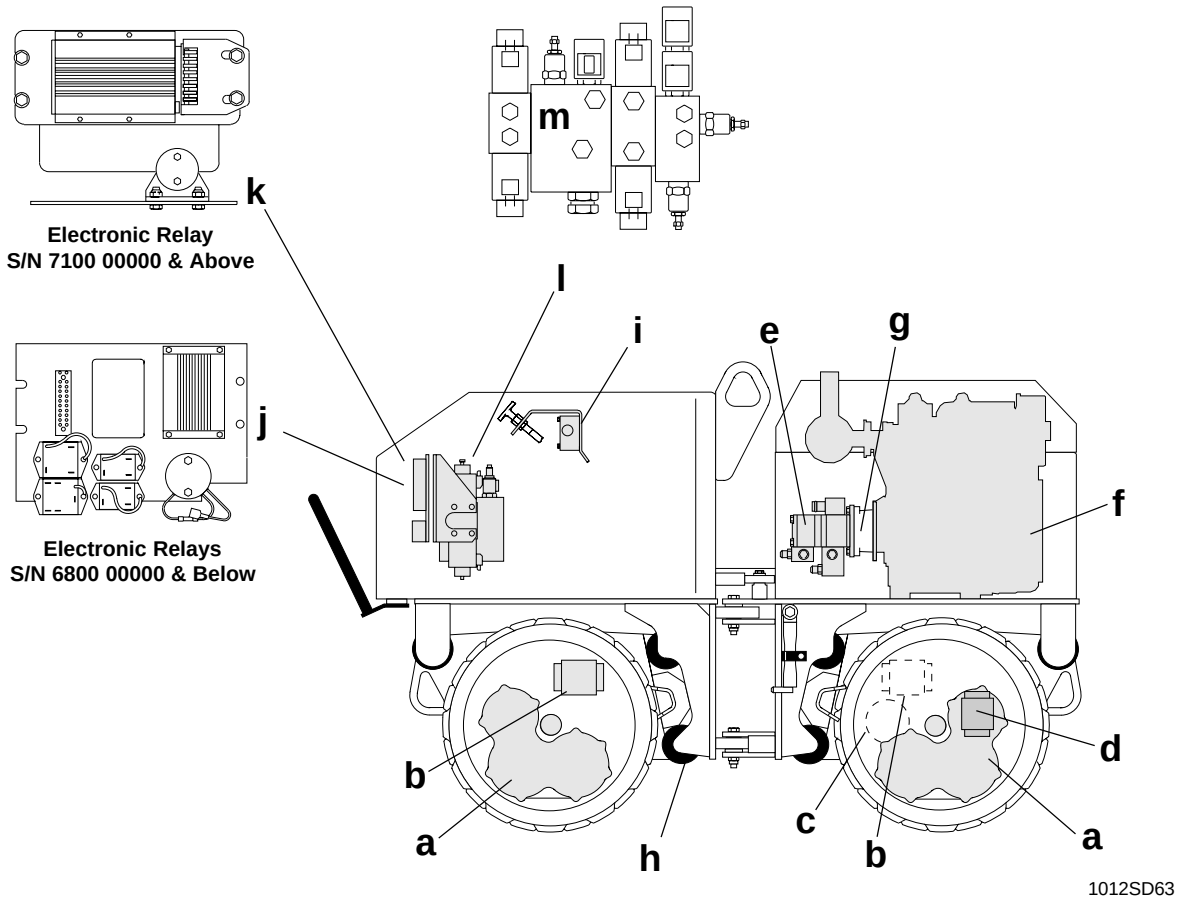

FIG . 2-1 MAJOR SYSTEM COMPONENTS

2.10 Exciter Operation

Low Amplitude Vibration

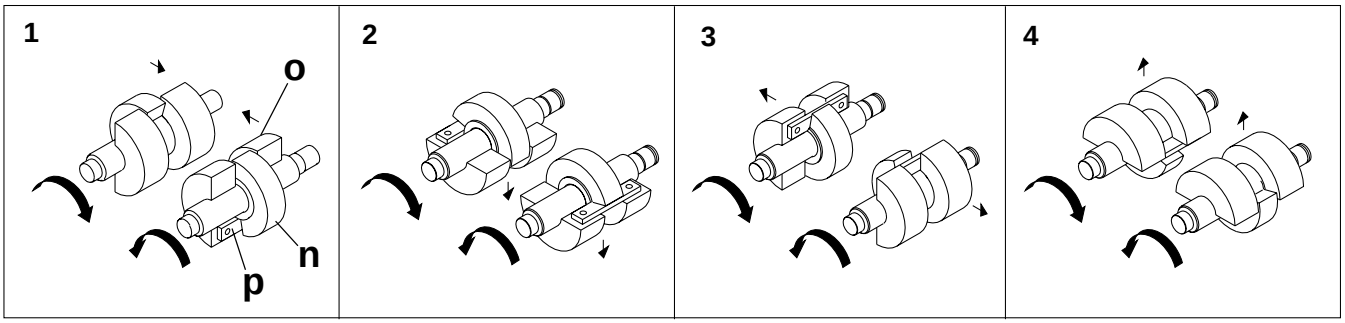

High Amplitude Vibration

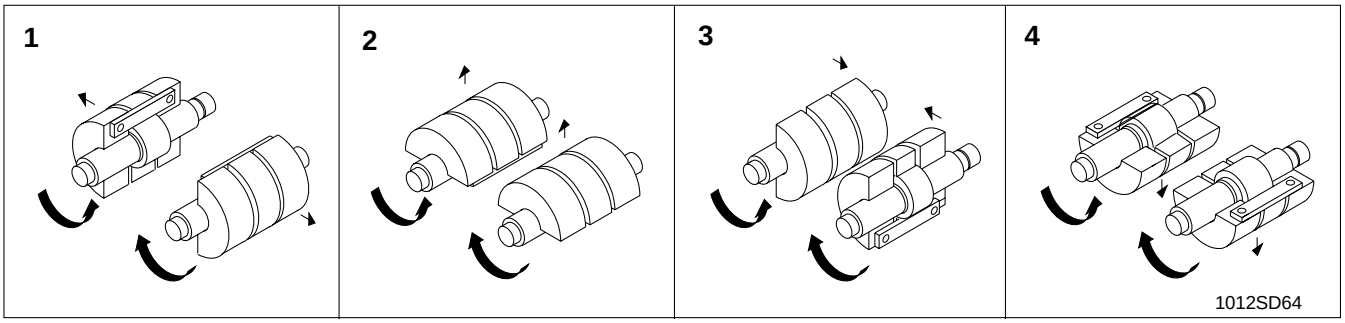

FIG. 2-2 ROTATION OF ECCENTRIC WEIGHTS IN EXCITER

Description

An exciter assembly (**a** in Fig. 2-1) is mounted inside, below the axle, of each drum. Each assembly contains two sets of eccentric weights that rotate to produce vibration. This vibration is transferred to the ground which results in the compaction of granular soils.

The exciter assembly is a sealed, independent, oil lubricated unit holding two exciter shafts, two gears, and a drive pinion. The shafts are supported on either end by roller bearings. Mounted to each shaft is a set of weights. Each set of weights consists of two fixed weights and one free weight. The fixed weights are fastened to the shaft while the free weight is designed to change its alignment with the fixed weights by rotating about the shaft. The illustrations above show the shafts and weights in one exciter assembly, in the positions they occupy for one full cycle of rotation. See Unit 5 for a complete breakdown of the exciter assembly.

The weights can be aligned to produce centrifugal force (vibration) in two mode settings:

low amplitude vibration - 7,000 pounds (31 kN)

high amplitude vibration - 14,000 pounds (62 kN).

The free weight is held in position by a bar **(p)** which is fastened across the fixed weights. Depending on which direction the shafts are turning, the free weight will rotate either in phase, or 180° out of phase, with the fixed weights.

High amplitude vibration is produced when the free weight rotates **in phase** with the fixed weights on the exciter shafts. In this mode the free weight is on the same side as the fixed weights, adding to the total centrifugal force.

Low amplitude vibration is the result of the free weight rotating **180° out of phase** with the fixed weights. In this position the free weight subtracts from the total centrifugal force.

The small arrows in the illustrations above show the direction of forces generated by the revolving weights. When the weights are in positions 2 and 4 the force from **both** shaft assemblies is directed in the same direction, either up or down. In positions 1 and 3 the force from one shaft assembly is opposite the other shaft assembly, canceling each other out.

The shafts must be properly timed to ensure the weights are in sync during positions 2 and 4. One cycle or vibration is created for each complete revolution of the weights. The exciter is designed to operate at 2400 vibrations per minute (vpm).

The shafts are driven by a gear type hydraulic motor attached to the exciter drive pinion through a flexible coupling.

2.11 Engine Speed & Machine Performance

Engine speed directly affects machine performance. The machine is designed to run at an engine speed of 2600 rpm to produce the best results.

These machines use fixed displacement pumps and motors. This means that as engine speed rises or falls, hydraulic flow through the pumps and to the motors increases or decreases.

Exciter speed (vpm) is determined by the amount of flow through the motors. If flow increases, exciter speed rises. If flow decreases, exciter speed falls.

Even a small rise or fall in speed has a large affect on the centrifugal force generated by the exciter. If the engine overspeeds even slightly, centrifugal force in the exciter will increase significantly and can overload the exciter bearings. If the engine runs underspeed, the centrifugal force will drop dramatically, causing poor compaction.

Low engine speed will also limit flow to the drive motors, reducing travel speeds.

For optimum machine performance maintain engine speed at 2600 rpm. Check engine speed accurately, using a tachometer, at regular intervals.

UNIT 3

HYDRAULIC SYSTEM

3.1 Hydraulic System Cleanliness 3-1
3.2 Hydraulic Oil Requirements 3-1
3.3 Hydraulic Flow Diagram 3-2
3.4 Hydraulic System 3-3
3.5 Control Valve Block 3-4
3.6 Hydraulic Schematic 3-5
3.7 High Speed Travel Circuit 3-6
3.8 Low Speed Travel Circuit 3-8
3.9 Exciter Circuit 3-10
3.10 Steering Circuit 3-12
3.11 Checking Hydraulic Pressures 3-14
3.12 Checking Drive Circuit 3-14
3.13 Checking Vibration Circuit 3-15
3.14 Checking Steering Circuit 3-16
3.15 Testing Drive & Exciter Circuit Relief Valves 3-16
3.16 System Pressures 3-16
3.17 Hydraulic Hose Routing and Location 3-18

3.1 Hydraulic System Cleanliness

Keeping the hydraulic fluid clean is a vital factor affecting the service life of hydraulic components. Oil in hydraulic systems is used not only to transfer power, but also to lubricate the hydraulic components used in the system. Keeping the hydraulic system clean will help avoid costly downtime and repairs.

Major sources of hydraulic system contamination include:

1. Particles of dirt introduced when the hydraulic system is opened for maintenance or repair.
2. Contaminants generated by the mechanical components of the system during operation.
3. Improper storage and handling of hydraulic fluid.
4. Use of the wrong type of hydraulic fluid.
5. Leakage in lines and fittings.

To minimize hydraulic fluid contamination:

CLEAN hydraulic connections before opening lines. When adding oil, clean hydraulic tank filler cap and surrounding area before removing.

AVOID opening pumps, motors or hose connections unless absolutely necessary.

PLUG or cap all open hydraulic connections while servicing system.

CHANGE hydraulic filters and fluids at the recommended service intervals.

3.2 Hydraulic Oil Requirements

WACKER recommends the use of a good petroleum-based, anti-wear hydraulic oil in the hydraulic system of this equipment. Good anti-wear hydraulic oils contain special additives to reduce oxidation, prevent foaming and provide for good water separation.

Premium grade, Anti-wear hydraulic fluid Viscosity Rating - 10W30
See *Section 2.3, Lubrication Specs.*, for Quantity

Most hydraulic oils are available in different viscosities. The SAE number for an oil is used strictly to identify viscosity—it **does not** indicate the type of oil (engine, hydraulic, gear, etc.).

3.3 Hydraulic Flow Diagram

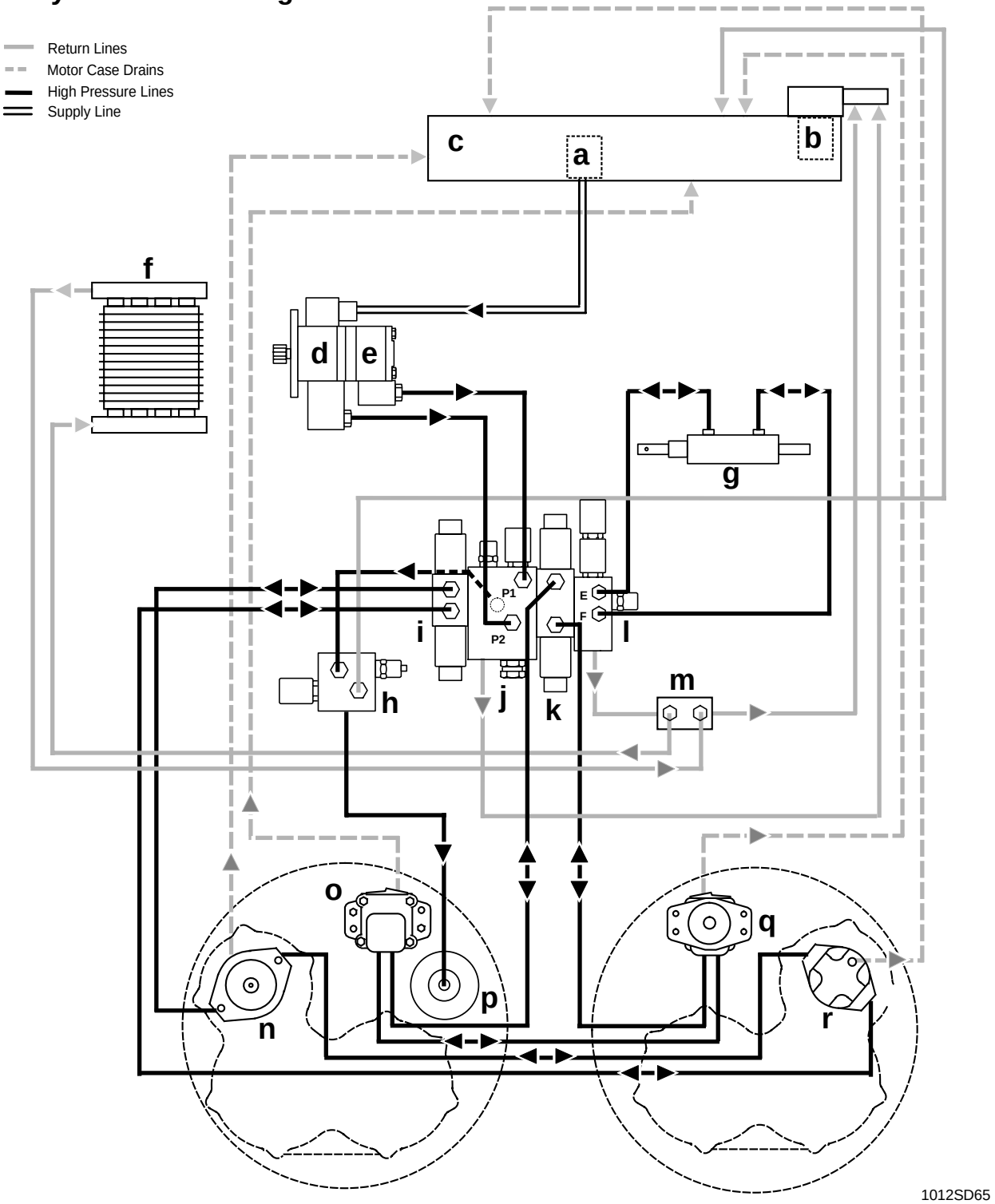

a	SUCTION STRAINER	**g**	STEERING CYLINDER	***m**	CHECK VALVE
b	RETURN LINE FILTER	***h**	BRAKE VALVE	**n**	FRONT EXCITER MOTOR
c	HYDRAULIC TANK	**i**	VIBRATION VALVE	**o**	FRONT DRIVE MOTOR
d	FRONT PUMP	**j**	MAIN MANIFOLD	***p**	BRAKE ASSEMBLY
e	REAR PUMP	**k**	TRAVEL VALVE	**q**	REAR DRIVE MOTOR
***f**	OIL COOLER	**l**	STEERING VALVE	**r**	REAR EXCITER MOTOR

***** Used only on machines with serial numbers above 7100 00000.

3.4 Hydraulic System

Description

Refer to Hydraulic Flow Diagram on opposite page.

Pressure in the hydraulic system is generated by two gear pumps mounted in tandem to the back of the engine. The pumps are driven by a common shaft which is connected to the engine crankshaft through a three piece coupling. Capacity of the front pump **(d)** is approximately 8 gpm (32 l/m) and is used to operate vibration or high speed travel. Rear pump **(e)** capacity is about 4 gpm (16 l/m) and is used for low speed travel.

A control valve block directs oil flow from the pumps to the motors and steering cylinder. The control valve block is mounted beneath the control panel at the rear of the machine. It consists of the manifold **(j)**, vibration **(i)**, travel **(k)** and steering **(l)** valves. These valves are solenoid operated. During operation the solenoids respond to the electrical signals being transmitted by the operator from the control box. Two reliefs, located on the main manifold, limit exciter and drive pressures to 3000 PSI (21 mPa). The steering circuit relief is mounted on the steering valve and is set at 1000 PSI (7 mPa). See *Section 3.5, Control Valve Block,* for control valve components.

Oil from the hydraulic tank **(c)** flows through a suction strainer **(a)** before it is drawn into the pump suction port. The suction strainer is mounted in the tank and is magnetic for removing metal particles. Hoses connect the output ports of the pumps to the main manifold **(j)** on the control block. The main manifold directs oil flow into the vibration **(i)** and travel **(k)** valves. These valves in turn supply hydraulic pressure to operate the exciter and drive motors.

When operating in *low speed travel*, the larger front pump is used to operate the exciter motors **(n, r)**, the smaller rear pump is used to operate the drive motors **(o, q)**. When operating in *high speed travel,* the main manifold redirects front pump oil flow away from the exciter motors to the drive motors. Flow from the rear pump is directed back to the tank. In high speed travel the exciter motors do not operate. See later sections in this unit for a detailed description of the exciter and drive circuits.

Return oil from the drive circuit flows to the steering valve **(l)** which directs it to the steering cylinder **(g)**.

The hydraulic system is protected by a return line filter **(b)**. The return line filter removes particles down to 10 microns and includes a by-pass for cold weather start-up.

Brake & Oil Cooler

An oil cooler **(f)** and brake **(p)** were added to machines with serial numbers above 7100 00000. On these units return flow from the steering valve is directed through a check valve **(m)** to the oil cooler **(f)** before returning to the hydraulic tank.

These units also utilize a hydraulic brake **(p)** on the front drum. The brake is connected to the hydraulic system through the main manifold **(j)** and brake valve **(h)**. The brake is spring loaded and normally set when the machine is off. When the hydraulic system is pressurized the brake is automatically released. The brake can be set manually by pressing the emergency stop button on the control box. This activates the solenoid on the brake valve **(h)** and releases the hydraulic pressure to the brake.

3.5 Control Valve Block

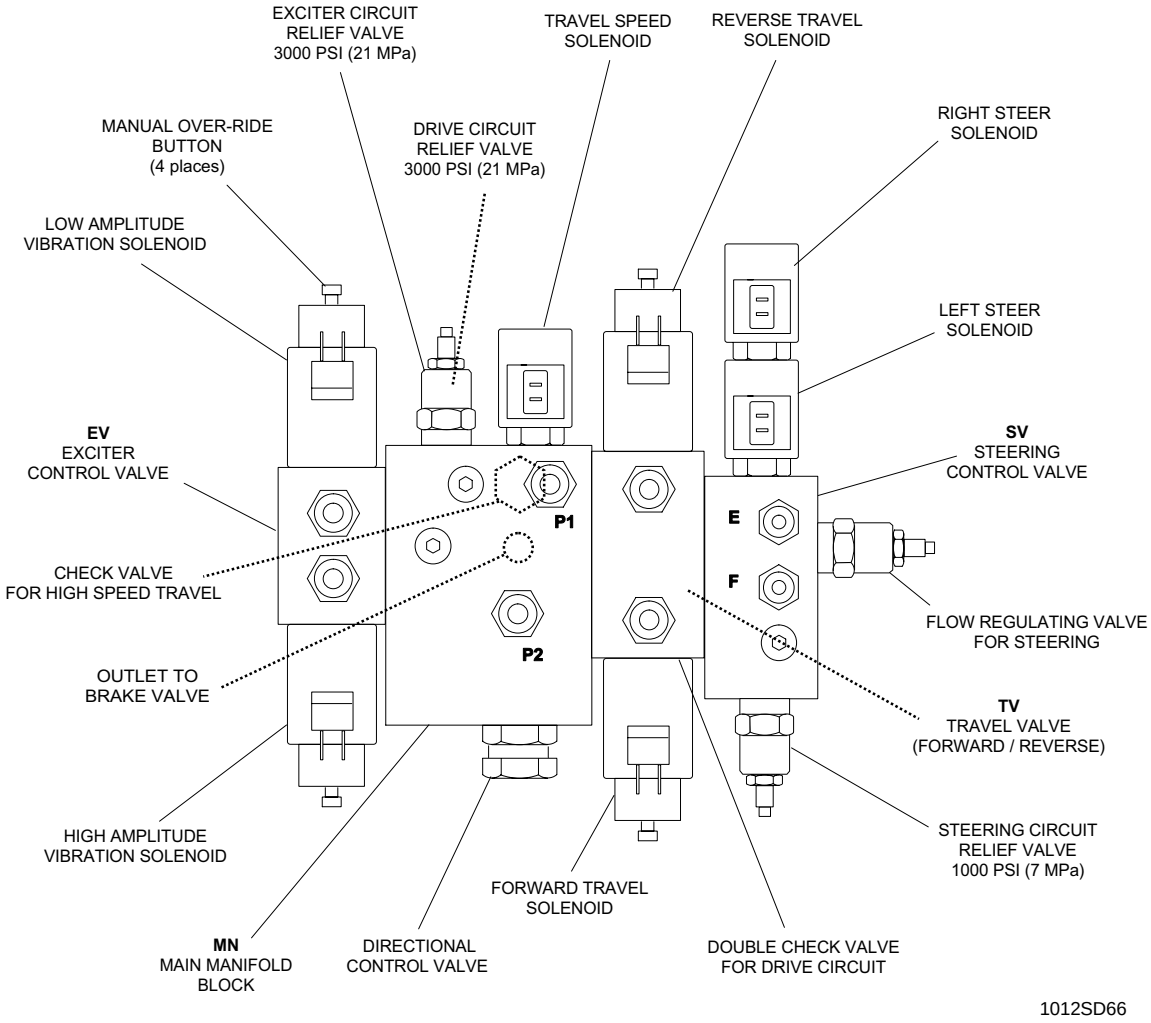

WARNING

The solenoids located on the vibration and travel valves are equipped with manual over-rides. Use of these over-rides for testing machine functions is not recommended. Pushing any of the over-ride buttons while the engine is running will cause sudden machine movement and could result in a serious or fatal injury. If testing must be done using these over-rides, stand at side of machine and make sure feet are away from drums before pushing button.

3.6 Hydraulic Schematic

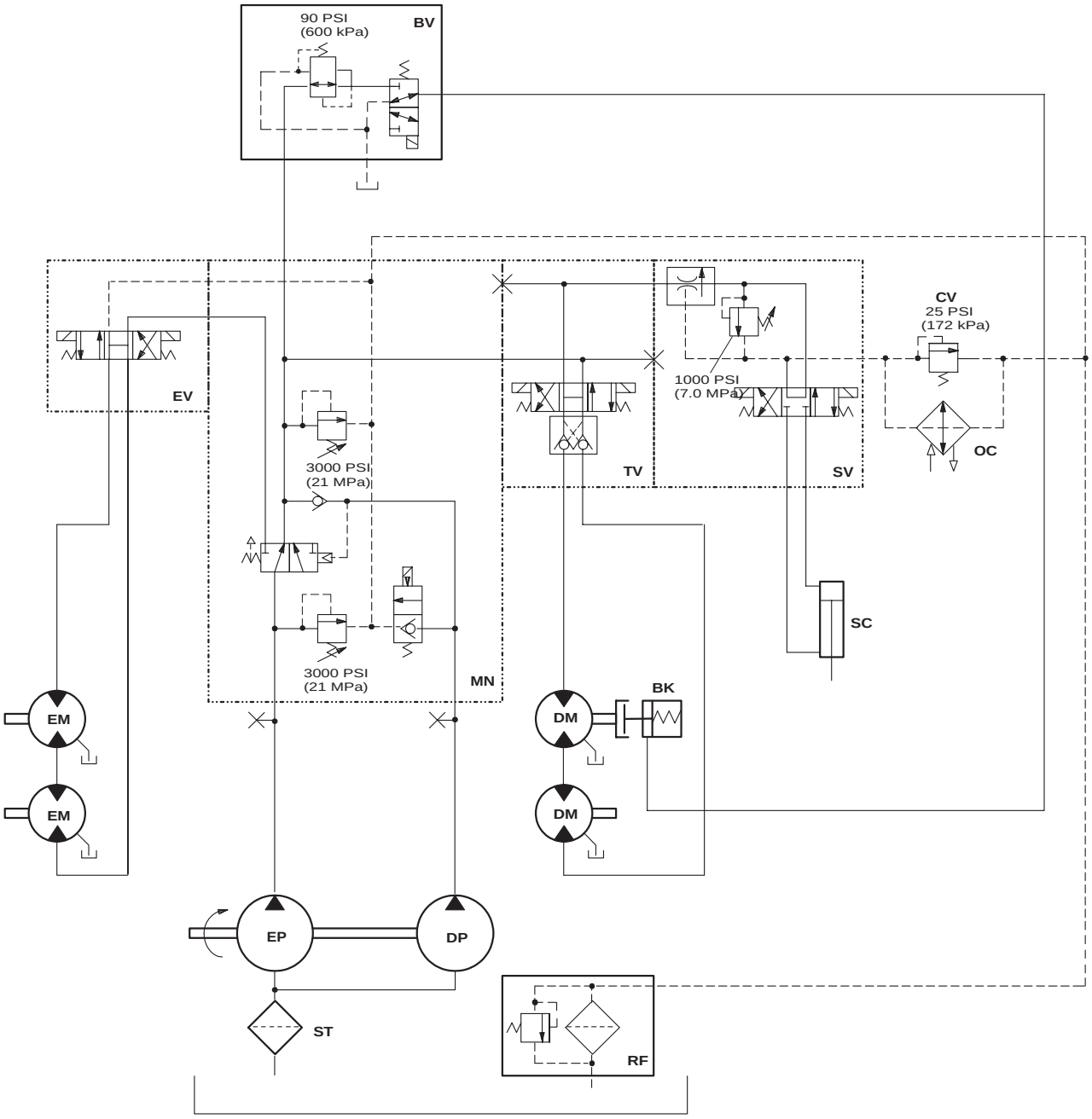

1007SD11

* **BK**	Brake	* **OC**	Oil Cooler
* **BV**	Brake Valve	**RF**	Return Filter
DM	Drive Motor	**SC**	Steering Cylinder
EM	Exciter Motor	**SV**	Steering Valve
EP	Exciter (Front) Pump (8 GPM)	**ST**	Strainer
EV	Exciter (Vibration) Valve	**TV**	Travel Valve
MN	Manifold	* **CV**	Check Valve

***** Used only on machines with serial numbers above 7100 00000.

3.7 High Speed Travel Circuit

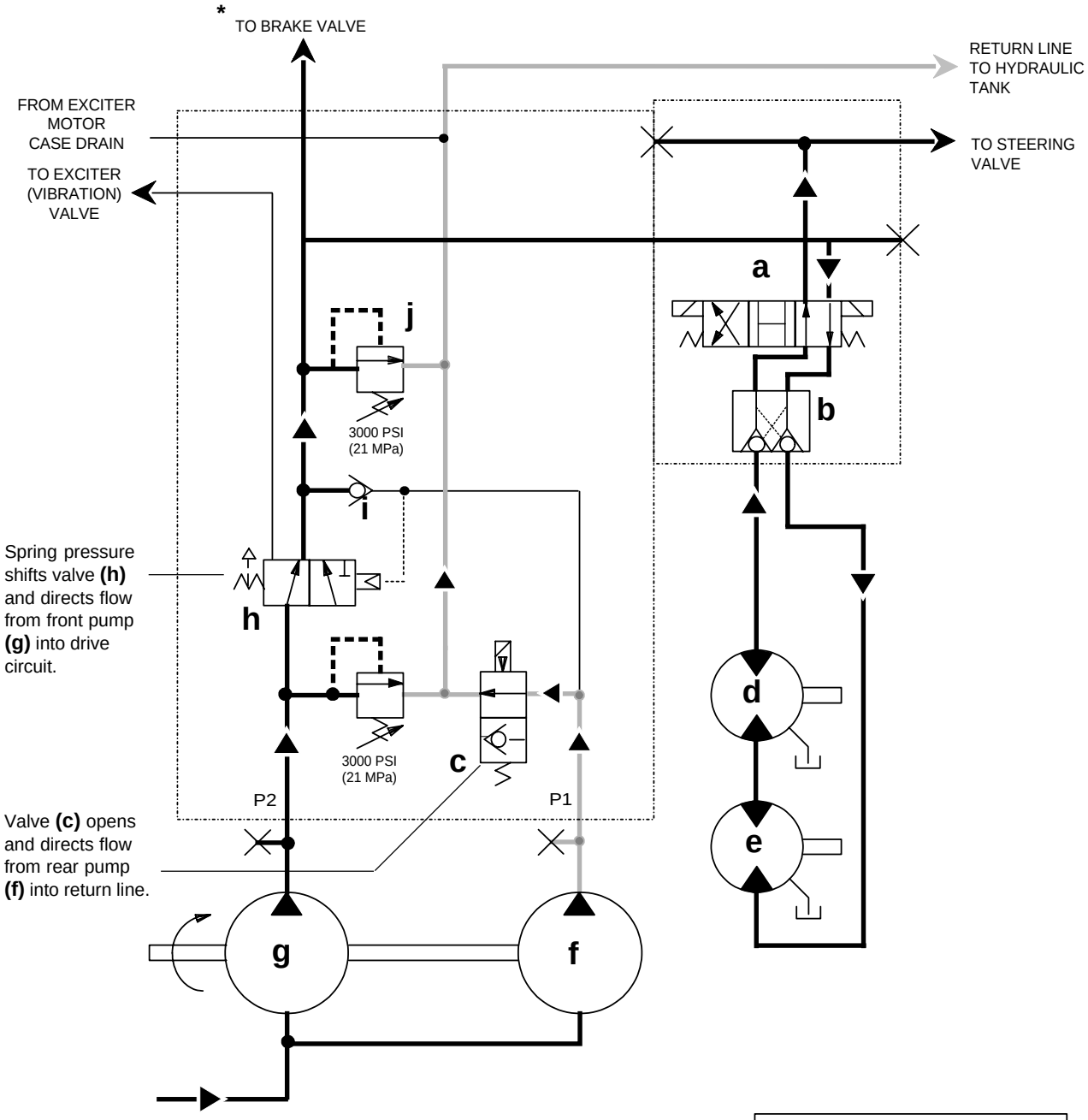

a TRAVEL VALVE
b DOUBLE CHECK VALVE
c TRAVEL SPEED VALVE
d FRONT DRIVE MOTOR
e REAR DRIVE MOTOR
f REAR PUMP
g FRONT PUMP
h DIRECTIONAL CONTROL VALVE
i CHECK VALVE
j DRIVE CIRCUIT RELIEF VALVE

***** Used only on machines with serial numbers above 7100 00000.

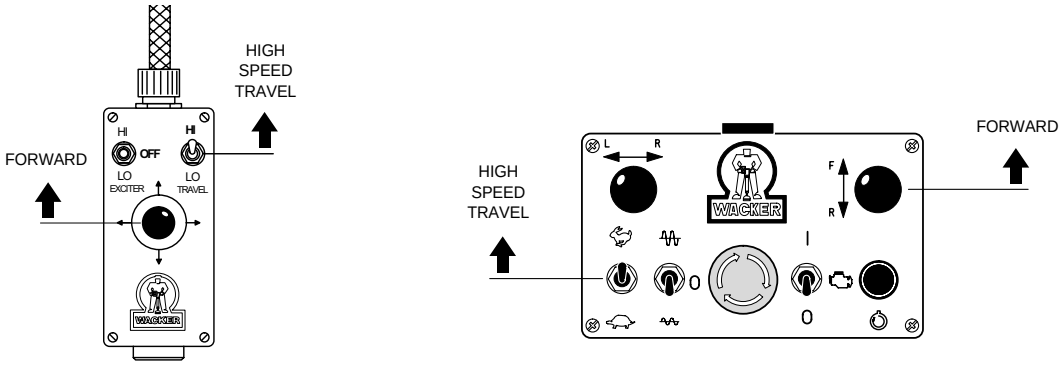

JOYSTICK CONTROL

DUAL LEVER CONTROL

1012SD68

Operating controls as shown above:
Exciter switch - OFF
Travel switch - HI
Directional control - FORWARD

Description

Note: *The diagram on the opposite page shows the direction of oil flow when operating in forward at high speed travel.*

High speed travel is obtained by using the full flow from the larger front pump **(g)** to operate the drive motors. This is accomplished by switching flow from the front pump away from the exciter circuit and into the drive circuit. The pilot-operated directional control valve **(h)** located in the main manifold valve **(k)** is used to do the switching.

Oil flows from the rear pump **(f)** to the travel speed valve **(c)**. When the operator switches to high speed travel, the travel speed solenoid is energized, which shifts the valve to the position shown. In this position, oil flows through the valve and returns to the hydraulic tank. This causes pilot oil pressure at the directional control valve **(h)** to drop, and allows spring force in the valve to shift the spool to the position shown. In this position, oil flow from the front pump is directed to the brake, drive, and steering circuits. There is no flow to the exciter motors.

Relief valve **(j)** limits hydraulic pressure in the drive circuit to 3000 psi (21 mPa). Check valve **(i)** prevents front pump oil flow from pressurizing the pilot circuit and shifting the directional control valve.

Machine forward and reverse directions are controlled by the solenoid-operated travel valve **(a)** which switches the direction of oil flow through the valve and drive motors.

When the operator switches to forward, the bottom solenoid on the travel valve energizes, which shifts the valve spool to the position shown. In this position, oil flows through the valve, rear drive motor **(e)**, front drive motor **(d),** and back through the valve to the steering circuit. With the directional controls in neutral, both solenoids are off and springs in the travel valve **(a)** return the spool to a neutral position. On machines using joystick control, operation in reverse will cause oil through the travel valve **(a)** to flow opposite the direction shown, reversing the direction of the drive motors. On machines using dual thumb controls the reverse solenoid is inactive in high speed travel.

Note: *Top or bottom as described above refers to the location of the solenoids as installed on the machine.*

A double check valve **(b)** provides a hydraulic lock to prevent the drive motors from rotating while the machine is in neutral or is turned off. When pressurized, the pilot port in each check valve opens the valve and allows oil flow in both directions.

3.8 Low Speed Travel Circuit

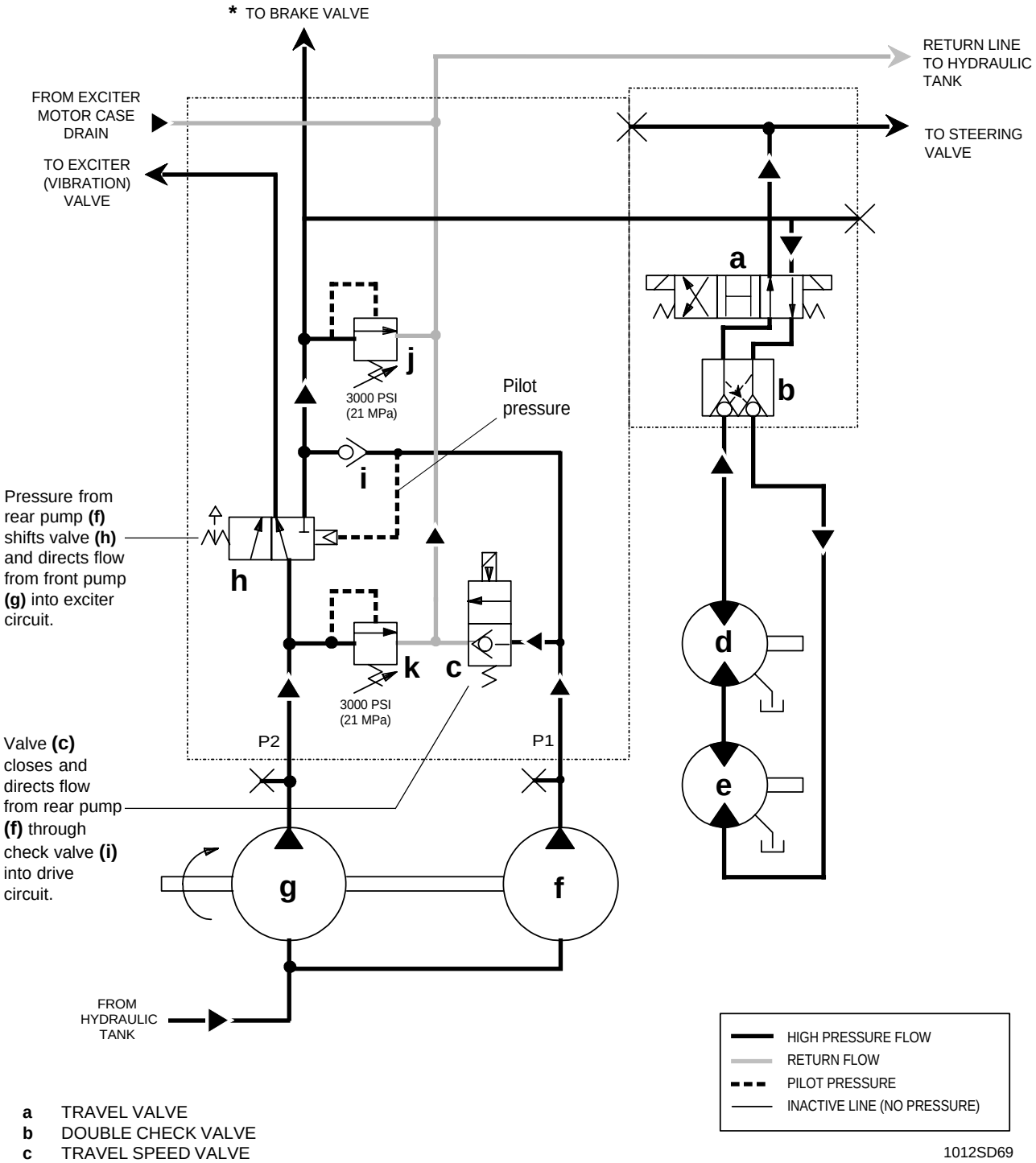

1012SD69

a TRAVEL VALVE
b DOUBLE CHECK VALVE
c TRAVEL SPEED VALVE
d FRONT DRIVE MOTOR
e REAR DRIVE MOTOR
f REAR PUMP
g FRONT PUMP
h DIRECTIONAL CONTROL VALVE
i CHECK VALVE
j DRIVE CIRCUIT RELIEF VALVE
k EXCITER CIRCUIT RELIEF VALVE

***** Used only on machines with serial numbers above 7100 00000.

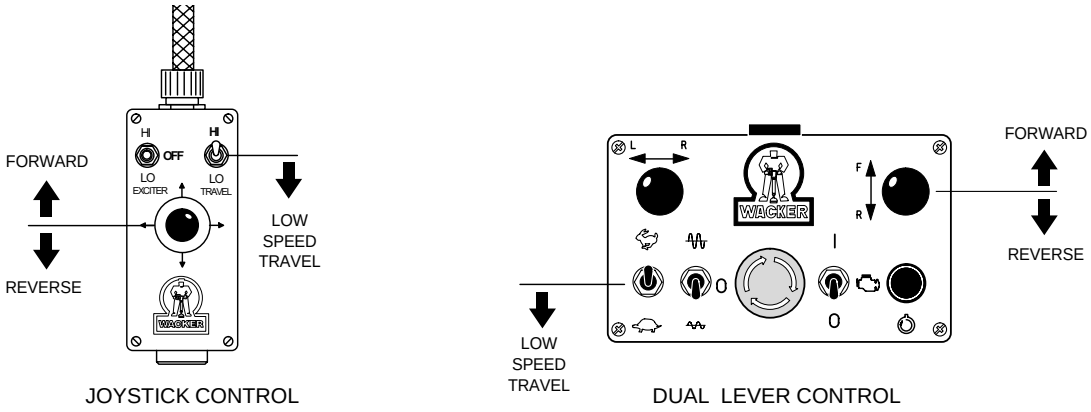

1012SD70

Operating Controls as shown above:
Exciter Switch - OFF
Travel switch - LOW
Directional control - FORWARD or REVERSE

Description

Note: *The diagram on the opposite page shows the direction of oil flow when operating at low speed travel and going forward.*

Low speed travel is obtained by using oil flow from the smaller rear pump **(f)** to operate the drive motors. This is accomplished by the solenoid-operated travel speed valve **(c),** which directs flow from the rear pump to the drive circuit.

Oil flows from the rear pump to the travel speed valve. When the operator switches to low speed travel, the travel speed valve solenoid **(c)** is turned off. This allows spring force in the valve to shift the spool to the position shown. In this position, flow from the rear pump is directed through check valve **(i)** and on to the drive and steering circuits. High pressure oil is also directed to the pilot port of the directional control valve **(h)**. Spring resistance in the directional control valve **(h)** is overcome by the increased oil pressure which shifts the spool to the position shown. In this position, oil flow from the larger front pump **(g)** is directed to the exciter circuit *(Section 3.9).* A flow regulating valve in the steering circuit always provides enough pressure to shift the directional control valve even if the travel and steering function are in neutral *(Section 3.10).*

Relief valves **(j, k)** limit hydraulic pressure in the drive and exciter circuits to 3000 psi (21 mPa).

Machine forward and reverse movements are controlled by the solenoid-operated travel direction valve **(a)** which switches the direction of oil flow through the valve and drive motors.

When the operator switches into forward, the bottom solenoid on the travel valve energizes, which shifts the valve spool to the position shown. In this position, oil flows through the valve, rear drive motor **(e)**, front drive motor **(d)** and back through the valve to the steering circuit. When the operator switches into reverse, oil flow through the valve is opposite the direction shown, reversing the direction of the drive motors. When the machine is in neutral, both solenoids are off and springs in the valve return the spool to neutral.

Note: *Top or bottom as described above refers to the location of the solenoids as installed on the machine.*

A double check valve **(b)** provides a hydraulic lock to prevent the drive motors from rotating while the machine is in neutral or turned off. When pressurized, the pilot port in each check valve opens the valve and allows oil flow in both directions.

3.9 Exciter Circuit

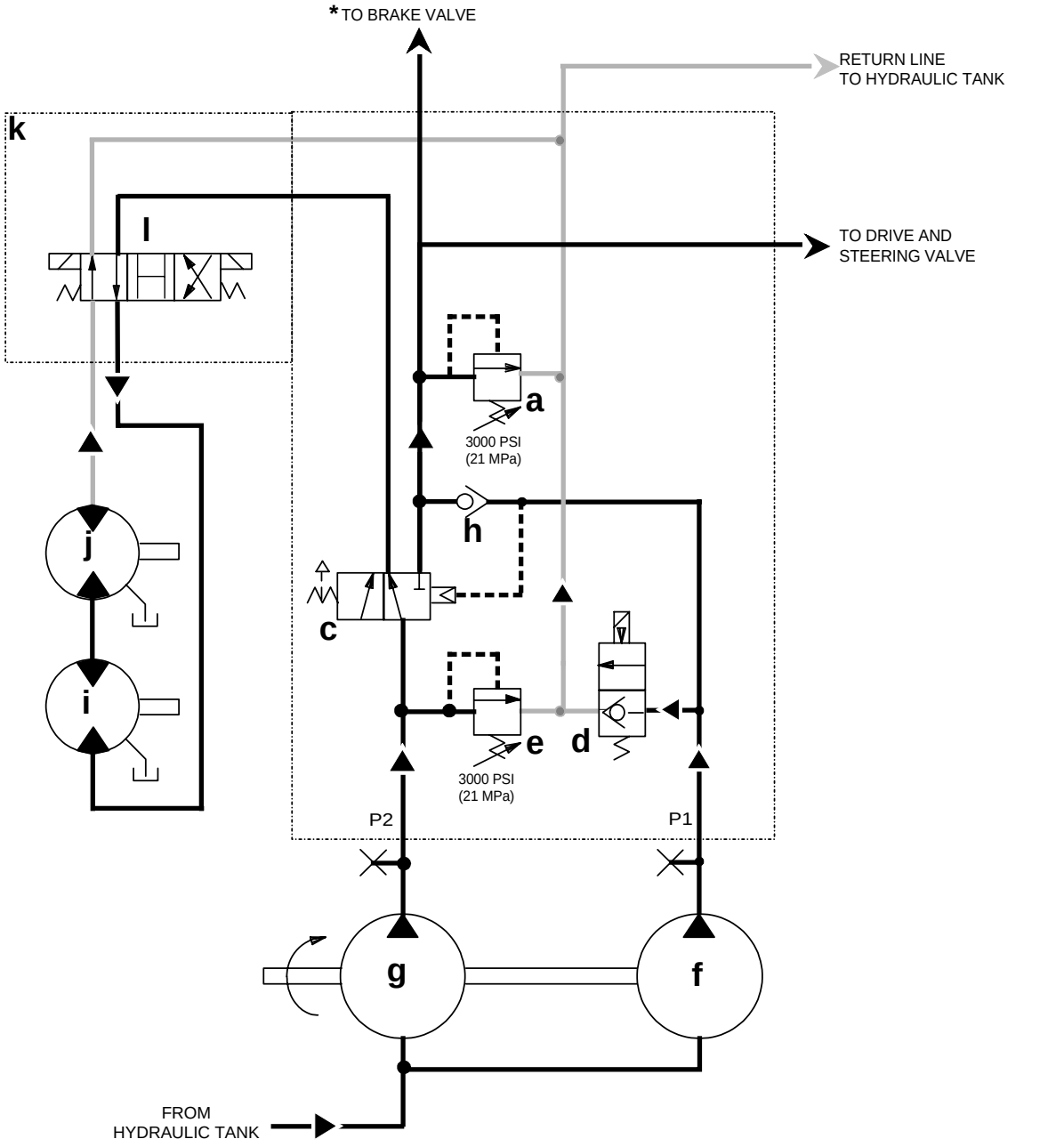

1012SD71

a DRIVE CIRCUIT RELIEF VALVE
b TRAVEL VALVE
c DIRECTIONAL CONTROL VALVE
d TRAVEL SPEED VALVE
e EXCITER CIRCUIT RELIEF VALVE
f REAR PUMP
g FRONT PUMP
h CHECK VALVE
i REAR EXCITER MOTOR
j FRONT EXCITER MOTOR
k EXCITER VALVE
l EXCITER SPEED VALVE

***** Used only on machines with serial numbers above 7100 00000.

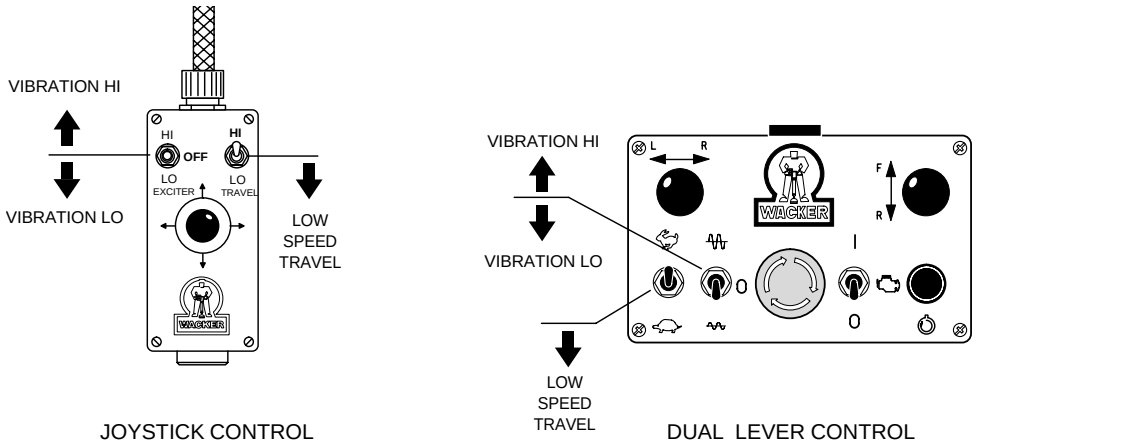

Operating controls as shown above:
Exciter Switch - LO or HI
Travel switch - LO

Description

Note: *The diagram on the opposite page shows the direction of oil flow when operating at low speed travel with the EXCITER switch set to LO.*

Operation of the low speed travel switch is necessary to open flow from the front pump to the exciter circuit. When operating in high speed travel the exciter circuit is closed and all flow is directed to the drive motors *(Section 3.7).*

When the operator switches to low speed travel, the travel speed valve **(d)** is turned off. This allows spring force in the valve to shift the spool to the position shown. In this position, flow from the rear pump is directed through check valve **(h)** and on to the drive and steering circuits. High pressure oil is also directed to the pilot port of the directional control valve **(c)**. Spring resistance in the directional control valve is overcome by the increased oil pressure which shifts the spool to the position shown. In this position, oil flow from the larger front pump **(g)** is directed to the exciter circuit. A flow regulating valve in the steering circuit always provides enough pressure to shift the directional control valve even if the travel and steering functions are in neutral *(Section 3.10).*

Relief valve **(a)** limits hydraulic pressure in the drive circuit to 3000 psi (21 mPa).

Low or high amplitude vibration is controlled by the solenoid-operated exciter valve **(l).** This valve switches the direction of oil flow through exciter motors.

With the EXCITER switch set in the low position (LO), the top solenoid is energized and the valve spool will be at the position shown. In this position, oil flows through the valve, rear exciter motor **(i)**, to the front exciter motor **(j)** and back through the valve to the hydraulic tank. When the exciter switch is moved to the high vibration position (HI), the LO solenoid is turned off and the valve returns to neutral. A timer in the electrical circuit keeps the valve in neutral for approximately 10 seconds before turning on the HI solenoid. This allows the exciter weights to stop rotating before reversing direction. With the exciter switch set at HI, oil flow through the motors is opposite of the direction shown, causing the exciter motors to reverse direction. See *Section 2.10, Exciter Operation,* for a description of the exciter operation.

Note: *Top or bottom as described above refers to the location of the solenoids as installed on the machine.*

Relief valve **(e)** limits hydraulic pressure in the exciter circuit to 3000 psi (21 mPa).

3.10 Steering Circuit

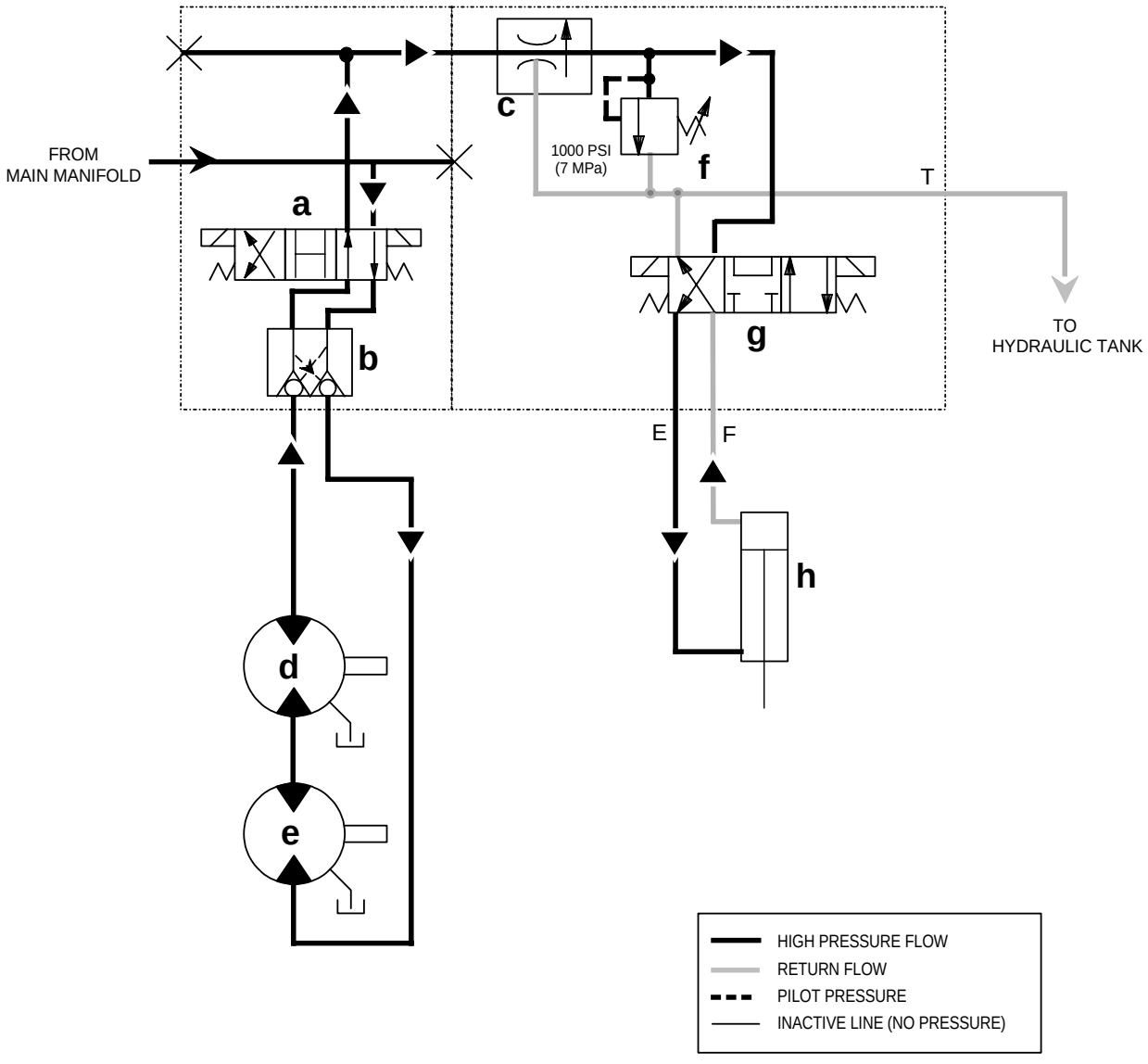

a TRAVEL VALVE
b DOUBLE CHECK VALVE
c FLOW REGULATING VALVE
d FRONT DRIVE MOTOR
e REAR DRIVE MOTOR
f STEERING CIRCUIT RELIEF VALVE
g STEERING CONTROL VALVE
h STEERING CYLINDER

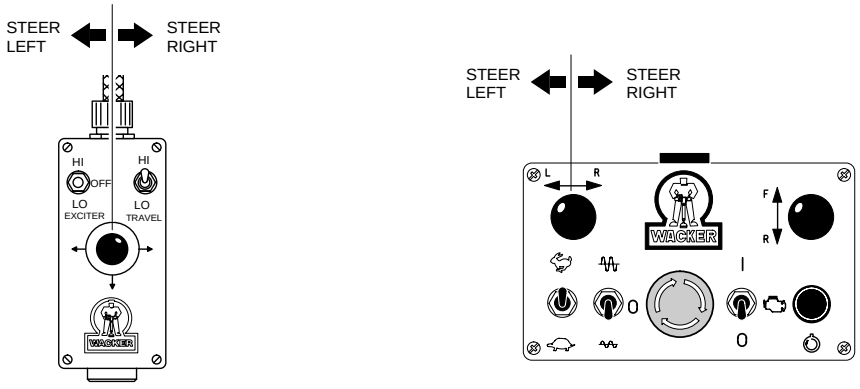

JOYSTICK CONTROL

DUAL LEVER CONTROL

1012SD74

Operating controls as shown above:
Directional control - LEFT or RIGHT

Description

Note: *The diagram on the opposite page shows the direction of oil flow when steering left.*

The steering circuit consists of a flow regulating valve **(c)**, pressure relief valve **(f)**, solenoid-operated control valve **(g)**, and steering cylinder **(h)**.

Return oil from the drive circuit flows into the steering circuit and through the flow regulating valve **(c)** before entering the solenoid-operated steering control valve **(g)**. The flow regulating valve maintains a constant 1 gpm flow rate in the steering circuit. This is necessary to provide the same degree of steering control whether operating in low or high speed travel. It also creates sufficient back pressure in the system to shift the directional control valve in the main manifold. This keeps the exciter circuit open when the steering and travel valves are in neutral.

When the operator steers left, the top solenoid on the steering valve **(g)** is energized and the valve spool shifts to the position shown. In this position, oil flows out port "E" of the valve, to the rod end of the steering cylinder **(h)**. At the same time, oil from the head end of the cylinder returns through port "F" and back to the hydraulic tank. This causes the cylinder rod to retract, turning the machine left. When the operator steers right, oil flows in the opposite direction causing the cylinder rod to extend and turn the machine to the right. With steering in neutral, both solenoids are turned off. Springs in the valve return the spool to center which allows oil to pass through the valve, out port "T", and back to tank.

Note: *Top or bottom as described above refers to the location of the solenoids as installed on the machine.*

Relief valve **(e)** limits hydraulic pressure in the steering circuit to 1000 psi (7 mPa).

3.11 Checking Hydraulic Pressures

Before making pressure checks:

1. Inspect machine for hydraulic leaks.
2. Check level of hydraulic fluid in tank.
3. Check engine operating speed at full throttle. Set at 2600 RPM.
4. Run machine for 5-10 minutes before testing to allow time for hydraulic system to warm up.

A test port is provided on the front **(a)** and rear **(b)** pumps for checking system pressures.

Note: *Test ports are equipped with quick disconnects and are designed for use with WACKER hydraulic test equipment.*

WARNING

Before opening hydraulic connections, shut engine off.

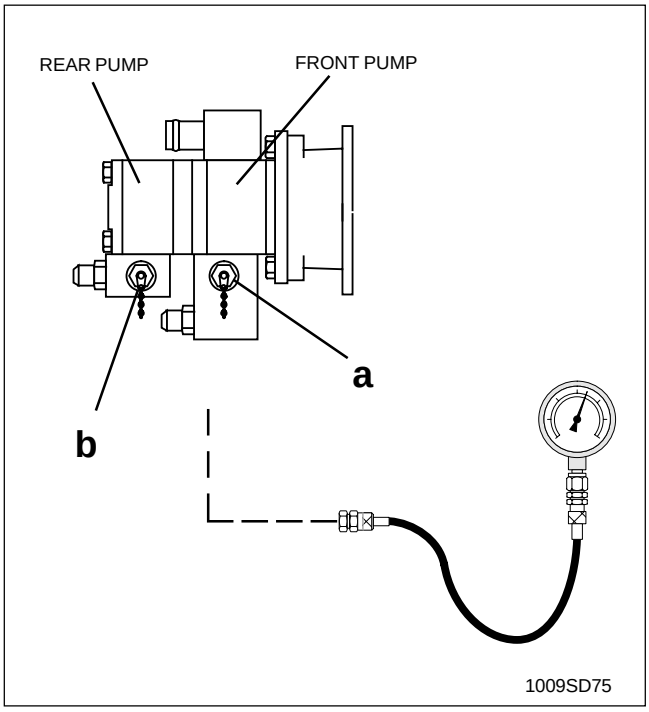

3.12 Checking Drive Circuit

Operating Pressure (Low Speed)

Check operating pressure with the machine on *a level compactible surface,* such as gravel or dirt.

1. Install 5000 PSI gauge in rear pump test port **(b)**.
2. Start engine and run at full throttle (2600 rpm).
3. Set TRAVEL switch to LO.
4. Move directional control forward and read forward operating pressure. Record reading.
5. Switch directional control to reverse and read reverse operating pressure. Record reading.

Operating pressures should be within range as shown in Table 3-1 on page 3-16. If pressure readings are above or below range, refer to Table 3-2 on page 3-17.

Operating Pressure (High Speed)

Check operating pressure with the machine on a *level compactible surface,* such as gravel or dirt.

1. Install 5000 PSI gauge in front pump test port **(a)**.
2. Start engine and run at full throttle (2600 rpm).
3. Set TRAVEL switch to HI.
4. Move directional control forward and read forward operating pressure. Record reading.
5. Move directional control to reverse and read reverse operating pressure. Record reading.

Operating pressures should be within range as shown in Table 3-1. If pressure readings are above or below range, refer to Table 3-2 on page 3-17.

Checking Drive Circuit, cont'd

Relief Pressure

1. Block in front of and behind both drums to prevent machine from moving, or deadhead machine against a solid concrete abutment.

WARNING

Make sure blocks are large enough so machine will not climb over them during testing.

2. Install a 5000 PSI gauge in front pump test port **(a)**.

3. Set TRAVEL switch to HI.

4. Start engine and run machine at full throttle. Push directional control forward until pressure on gauge tops out. This is the high speed relief valve pressure. *Make sure drums do not spin.* Record reading.

5. Stop engine. Set TRAVEL switch to LO.

6. Install gauge in rear pump test port **(b)** and repeat step 4. This is the low speed relief valve pressure. Record reading.

Relief valve pressures should be within range as shown in Table 3-1. If pressure readings are above or below range, refer to Table 3-2 on page 3-17.

3.13 Checking Vibration Circuit

Test vibration with drums on soil or gravel. If testing is done inside, position drum on rubber tire or heavy mat to absorb vibration. **Do not** run vibration on concrete.

Operating Pressure (High Amplitude)

1. Install 5000 PSI gauge in front pump test port **(a)**.

2. Start engine and run machine at full throttle (2600 rpm) with directional controls in neutral and TRAVEL switch in LO.

3. Switch vibration to HI. Gauge will show relief pressure momentarily as exciter starts and then fall to normal operating pressure as exciter reaches full speed. Record reading.

Operating pressures should be within range as shown in Table 3-1. If pressure readings are above or below range, refer to Table 3-2 on page 3-17.

Operating Pressure (Low Amplitude)

1. Install 5000 PSI gauge in front pump test port **(a)**.

2. Start engine and run machine at full throttle (2600 rpm) with directional control in neutral and TRAVEL switch in LO.

3. Switch vibration to LO. Gauge will show relief pressure momentarily as exciter starts and then fall to normal operating pressure as exciter reaches full speed. Record reading.

Operating pressures should be within range as shown in Table 3-1. If pressure readings are above or below range, refer to Table 3-2 on page 3-17.

3.14 Checking Steering Circuit

1. Install 2000 PSI gauge in rear pump test port **(b)**.

2. Start engine and run machine at full throttle (2600 rpm).

3. Set travel speed to LO.
   Note: *Running in high speed travel will cause the steering circuit to run off the front pump.*

4. Move directional control right or left. Gauge will show operating pressure until cylinder gets to end of stroke and then show relief pressure. Record readings.

Operating and relief pressures should be within range as shown in Table 3-1. If pressure readings are above or below range, refer to Table 3-2 on page 3-17.

3.15 Testing Drive & Exciter Circuit Relief Valves

Drive and exciter circuit relief valves are identical and set at the same pressures. They can be tested for correct operation by simply swapping positions with one another. Swap the one in question with the other and test for correct pressure (see table 3-1). If pressure is correct with the second valve installed, the original valve is malfunctioning and will require replacement.

3.16 System pressures

Table 3-1 below lists normal operating pressures based on the machine running over a level compactible surface. These pressures are approximate and will vary for different operating conditions. Operating pressure readings for the drive and steering circuits may be higher when operating in extremely loose soils or on an incline. Operating pressure readings will be lower when operating on flat, hard surfaces where there is less surface resistance.

Table 3-1. Hydraulic System Pressures

	Normal Operating Pressure @ 2600 RPM PSI (mPa)	**Relief Valve Pressure PSI (mPa)**	**Test Port Location**
Forward or Reverse in LOW Speed	180 - 600 (1.2 - 4.2)	3000 (21)	Rear Pump
Forward or Reverse in HIGH Speed	300 - 800 (2.1 - 5.6)	3000 (21)	Front Pump
Exciter in LOW Vibration	1050 - 1250 (7.3 - 8.7)	3000 (21)	Front Pump
Exciter in HIGH Vibration	1200 - 1600 (8.4 - 11.2)	3000 (21)	Front Pump
Steering	300 - 800 (2.1 - 5.6)	1000 (7)	Rear Pump (Low speed travel)

Table 3-2. Hydraulic System Troubleshooting

Problem	Possible Cause	Remedy
Drive Circuit Operating Pressures are too Low (Below 180 psi)	Testing surface is too hard or smooth.	Check readings while machine is on compactible soil. If pressure readings still are low, continue.
	Engine operating below 2600 rpm.	Set throttle to deliver 2600 rpm.
	Suction hose or fittings leaking, allowing air into pump inlet.	Tighten hose fittings as necessary.
	Oil level is too low in tank.	Make sure oil is at proper level.
	Worn pump or pump coupling.	Remove pump and coupling and repair as necessary.
	Malfunctioning relief valve.	Test relief valve for proper operation (see Section 3.15).
Drive Circuit Operating Pressures are too High (Above 800 psi)	Wrong weight oil in drive gearcase (viscosity too high).	Drain and fill with proper weight oil for operating conditions. If pressure readings still are high, continue.
	Engine operating above 2600 rpm.	Set throttle to deliver 2600 rpm.
	Drum binding due to dirt build-up between drums and drum supports.	Remove dirt build-up.
	Drive assembly binding due to worn or improperly assembled parts.	Remove, inspect, repair and properly assemble drive assembly.
	Hoses routed incorrectly.	Make sure hoses are routed properly. See Hydraulic Flow Diagram on page 3-2.
Exciter Circuit Operating Pressure is too Low (Below 800 psi) - Drive Circuit Pressures Okay	Sticky spool in exciter or directional control valve, allowing partial pressure loss.	Check electrical circuits to make sure solenoids are functioning properly. If okay, continue.
		Remove control valve and repair or replace as necessary.
	Hoses leaking.	Tighten fittings.
	Worn exciter motor(s).	Repair exciter motor(s).
	Malfunctioning relief valve.	Test relief valve for proper operation (see Section 3.15).
Exciter Circuit Operating Pressure is too High (Above 1800 psi) - Drive Circuit Pressures Okay	Wrong weight oil in exciter assembly (viscosity too high).	Drain and fill with proper weight oil for operating conditions.
	Exciter assembly oil level too high.	Remove, inspect and repair exciter assembly, as necessary. Fill with oil to proper level.
	Binding in exciter assembly (bearings worn or damaged).	Remove, inspect and repair exciter assembly, as necessary.
Relief Pressure too Low	Relief valve adjustment wrong.	Adjust or replace valve as necessary.
	Worn pump or motor.	Repair as necessary.

3.17 Hydraulic Hose Routing and Location

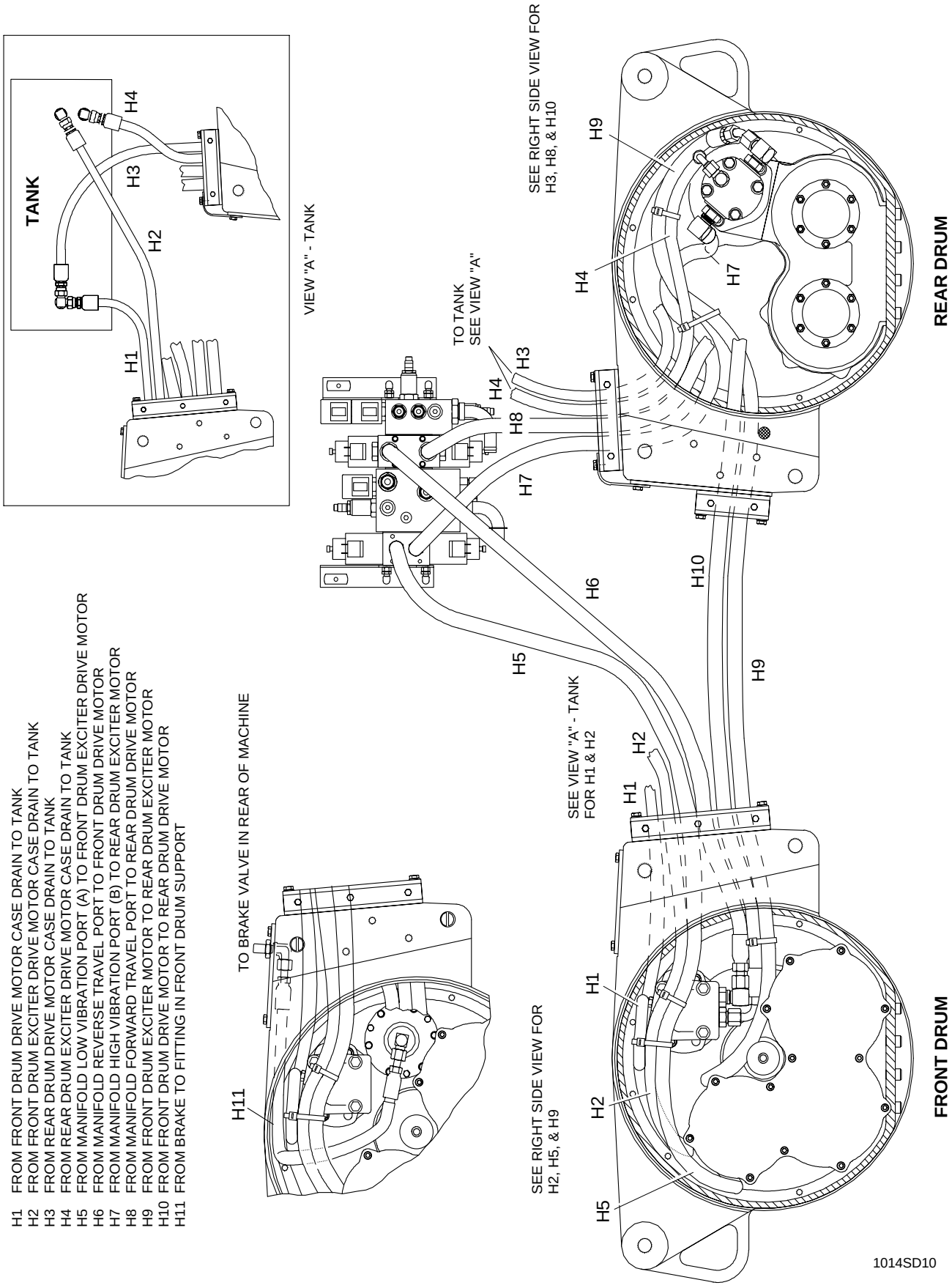

HOSE	ROUTING
H1	FROM FRONT DRUM DRIVE MOTOR CASE DRAIN TO TANK
H2	FROM FRONT DRUM EXCITER DRIVE MOTOR CASE DRAIN TO TANK
H3	FROM REAR DRUM DRIVE MOTOR CASE DRAIN TO TANK
H4	FROM REAR DRUM EXCITER DRIVE MOTOR CASE DRAIN TO TANK
H5	FROM MANIFOLD LOW VIBRATION PORT (A) TO FRONT DRUM EXCITER DRIVE MOTOR
H6	FROM MANIFOLD REVERSE TRAVEL PORT TO FRONT DRUM DRIVE MOTOR
H7	FROM MANIFOLD HIGH VIBRATION PORT (B) TO REAR DRUM EXCITER MOTOR
H8	FROM MANIFOLD FORWARD TRAVEL PORT TO REAR DRUM DRIVE MOTOR
H9	FROM FRONT DRUM EXCITER MOTOR TO REAR DRUM EXCITER MOTOR
H10	FROM FRONT DRUM DRIVE MOTOR TO REAR DRUM DRIVE MOTOR
H11	FROM BRAKE TO FITTING IN FRONT DRUM SUPPORT

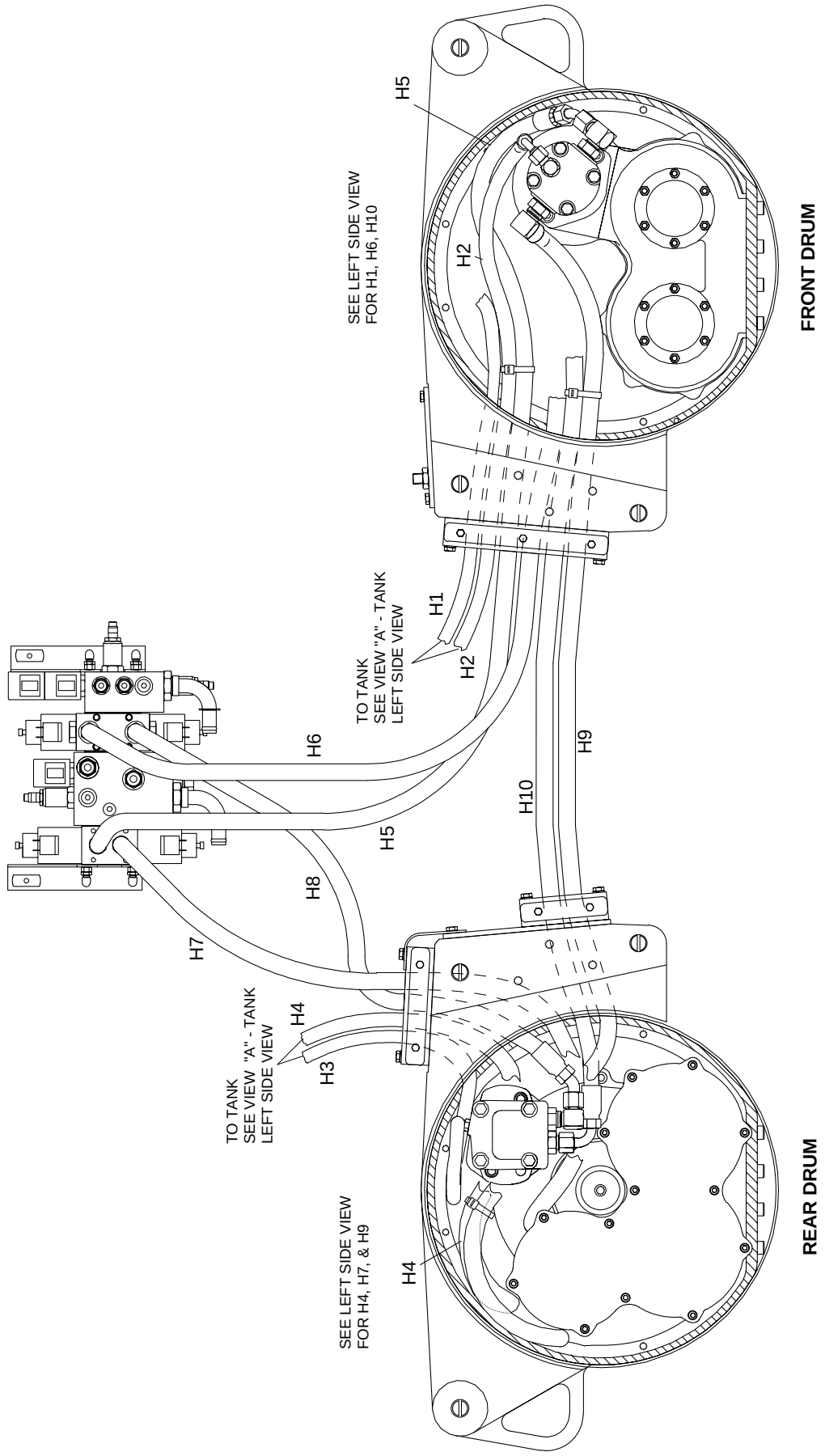

RIGHT SIDE VIEW

1014SD11

NOTES

UNIT 4

DRUM

4.1 Introduction 4-1
4.2 Changing Oil 4-1
4.3 Drum Assembly - Exploded View 4-2
4.4 Drums 4-3
4.5 Drum Support Cover 4-4
4.6 Drive Bearings & Seals 4-5
4.7 Drivecase 4-6
4.8 Drivecase - Exploded View 4-7
4.9 Brake (S/N 7100 00000 & Above) 4-8
4.10 Servicing Brake 4-9
4.11 Drive Motor 4-10
4.12 Drivecase Components 4-11

4.1 Introduction

This section covers complete disassembly and assembly of the front and rear drum support assemblies including replacement of bearings, seals, and drive motor.

Note: *On machines with serial numbers 7100 00000 & above, the front drum also includes a brake assembly.*

4.2 Changing Oil

The drum drive case is lubricated in an oil bath.

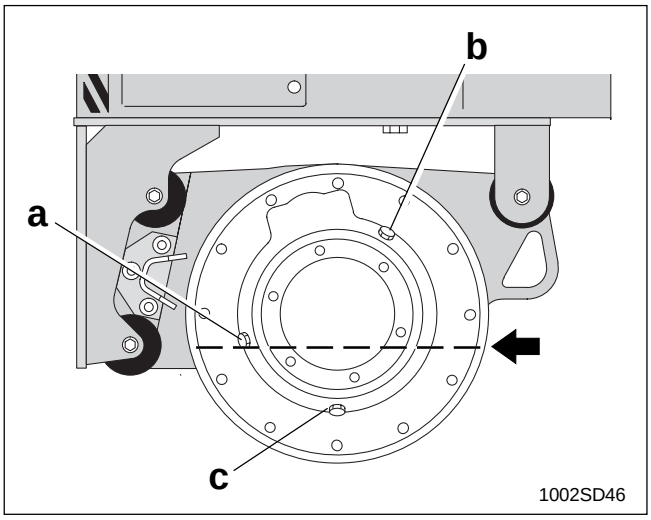

To drain oil:

1. Remove drum from the drivecase side of machine (see Section 5.3 *Drums*). On the front of the machine this will be the right side, and on the rear of the machine the left side.

2. Remove fill plug **(b)** for venting.

3. Remove drain plug **(c)** and drain oil from drum.

To add oil:

1. Install drain plug **(c)**.

2 Remove level plug **(a)**.

3. Add SAE 10W30 oil at fill plug until oil flows out of level plug opening. Replace plugs.

Total Capacity: 8 oz. (240 ml).

4. Install fill plug **(b)**.

4.3 Drum Assembly - Exploded View

*** Assembly Notes**

REF.	SEALANT LOCTITE (OMNIFIT)	TORQUE FT.LBS. (NM)
1	242 (100)	---
7	242 (100)	36 (49)
9	---	450 (610)
12	---	36 (49)
13	242 (100)	36 (49)
14	242 (100)	18 (25)
15	515 (10)	---
17	242 (100)	63 (85)
22	242 (100)	88 (120)
25	242 (100)	155 (210)
26	242 (100)	155 (210)

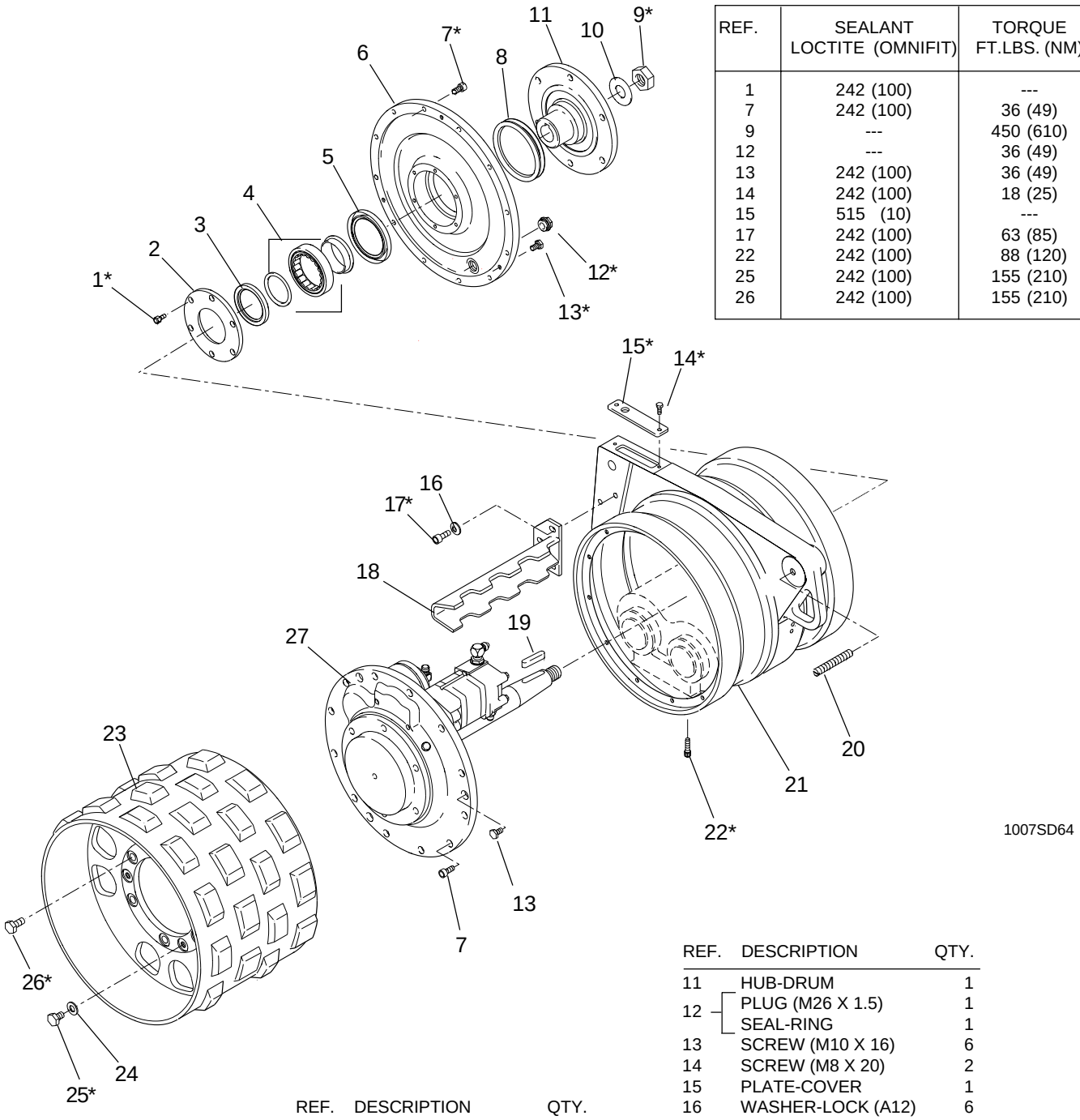

REF.	DESCRIPTION	QTY.
1	SCREW (M8 X 16)	6
2	PLATE-RETAINING	1
3	SEAL-SHAFT	1
4	BEARING-ROLLER	1
5	SEAL-SHAFT	1
6	COVER-SUPPORT	1
7	SCREW (M10 X 20)	24
8	SEAL-SHAFT	1
9	NUT-HEX (1¼-18)	1
10	WASHER (1-1/8")	1

REF.	DESCRIPTION	QTY.
11	HUB-DRUM	1
12	PLUG (M26 X 1.5)	1
	SEAL-RING	1
13	SCREW (M10 X 16)	6
14	SCREW (M8 X 20)	2
15	PLATE-COVER	1
16	WASHER-LOCK (A12)	6
17	SCREW (M12 X 25)	6
18	SCRAPER-BAR	2
19	KEY	1
20	STUD- SHOCKMOUNT	1
21	DRUM SUPPORT	1
22	SCREW (M12 X 35)	8
23	DRUM	2
24	WASHER (B17)	6
25	SCREW (M16 X 16)	6
26	SCREW (M16 X 25)	12
27	DRIVECASE	1

Recommended Tools

Socket - 1-7/8", 19 mm, 24 mm
Allen Wrench - 6 mm, 8 mm, 10 mm, 14 mm
Open End Wrench - 19 mm
Torque Wrench
Loctite 242, 545 (or Equivalents)
Three M16 x 55 Screws
Three M10 x 55 Screws
Three M12 x 90 Hardened Screws (P/N 11411)
Silicone
Arbor Press
Propane Torch
Grease - Shell Alvania No. 2

4.4 Drums

Removal:

1. Lock articulated joint *(Section 1.5).*

2. Lift machine by the lifting eye **(a)** using an appropriate crane or hoist. Also use jack stands to support machine from underneath **(b)** machine frame.

3. Loosen the three M12 screws (17) and remove scraper bar (18).

4. Remove the six M16 (26) screws holding the drum (23) to the drivecase.

5. Remove the three M16 (25) screws and insert three M16 x 55 screws into the holes. Turn screws in to push drum off hub.

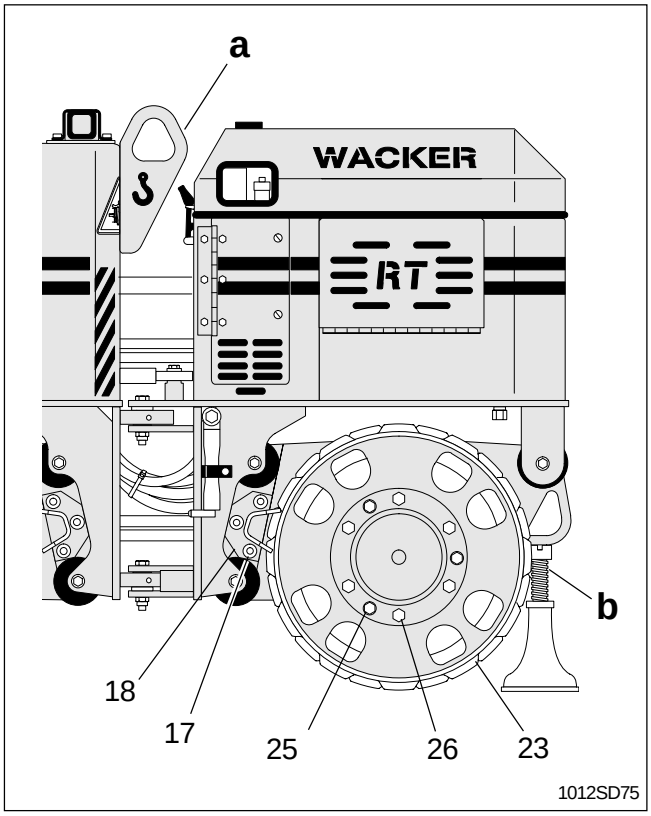

FIG. 4-2 REMOVING DRUMS

Installation:

1. Install drum (23) to drivecase (27) with M12 screws (26). Use Loctite 242, or an equivalent threadlocking compound, on screws, and torque to 155 ft.lbs. (210 Nm).

2. Install the three M16 x 16 screws (25) and washers (24) into pusher holes to plug holes and protect threads. Secure screws with Loctite 242, or equivalent.

3. Install scraper bar. Secure screws with Loctite 242, or equivalent, and torque to 63 ft. lbs. (85 Nm).

4.5 Drum Support Cover

See Section 4.3 for Drum Assembly Drawing

Removal:

1. Remove drums and scrapers bars *(Section 4.4).*

2. Using a large breaker bar remove the 1-1/4" hex nut (9) and washer (10) which holds the drum on the axle.

3. Insert three M16 x 55 screws into alternating holes on hub in which drum was mounted. Turn screws **(c)** in to push drum hub (11) off support cover (6).

4. Remove wiper seal (8) from support cover (6).

5. Remove the twelve M10 screws (7) holding the support cover (6) to the drum support (21).

6. Remove the three M10 (13) screws in the support cover. Into these holes insert three M10 x 55 screws. Turn screws in to push cover from drum support.

Installation:

Drum drivecase must be in place before assembling drum support cover *(Section 4.7).*

1. Install support cover on drum support using twelve M10 screws (7). Secure screws using Loctite 242 and torque to 36 ft. lbs. (49 Nm). Install the three M10 screws (13) back into pusher holes to protect the threads.

2. Apply a bead of silicone to cover in area **(d)** where wiper seal (8) will seat. This will help hold seal in place and prevent it from spinning. Attach seal to support cover.

3. Install drum hub into drum support assembly and secure with washer (10) and nut (9). Use Loctite 242 on axle shaft threads and torque nut to 450 ft. lbs. (610 Nm).

4. Install drums and scraper bars.

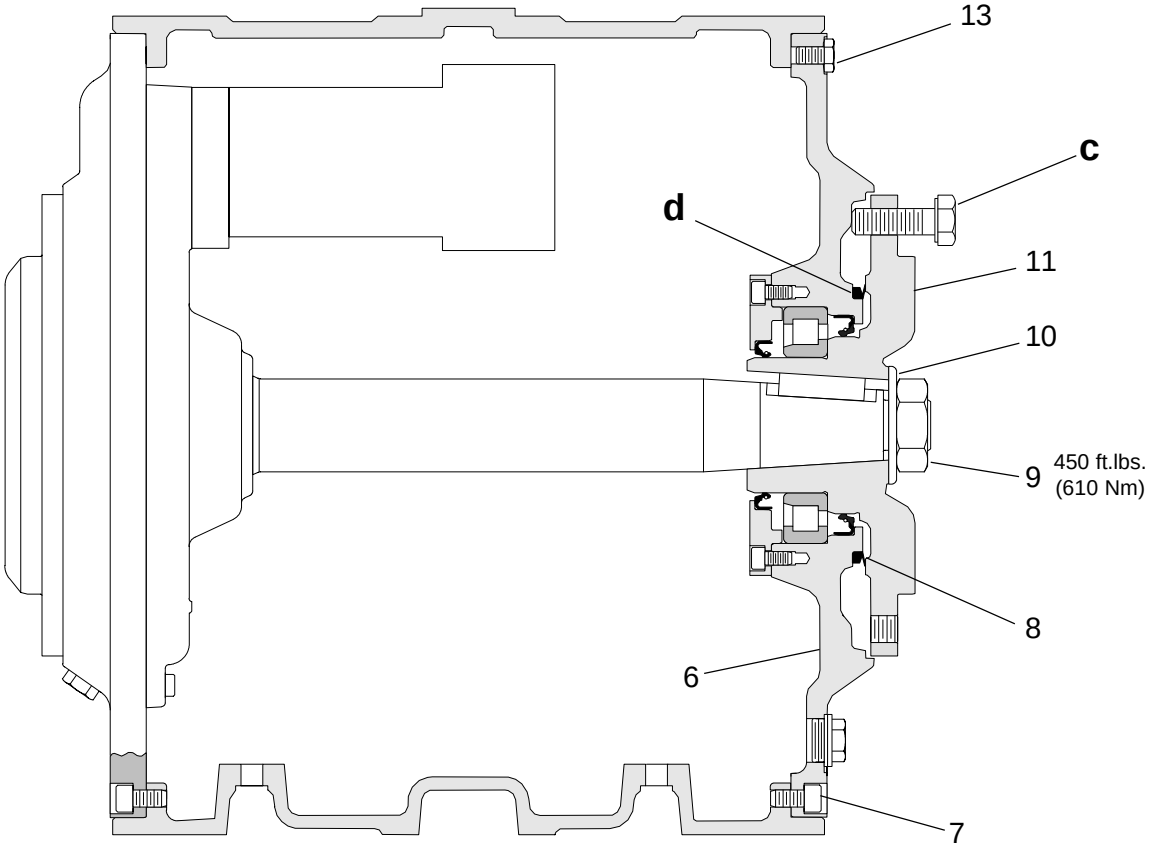

FIG. 4-3 SUPPORT COVER CROSS-SECTION

4.6 Drive Bearings & Seals

Disassembly:

1. Remove drum support cover *(Section 4.5).*

2. Clean drum hub (11) of all grease. Heat bearing race (4b) with propane torch. Once race is hot, use a chisel to pry race off hub far enough to install a puller. It may be necessary to use an oxy-acetylene torch in order to heat bearing race fast and hot enough for removal. If using a torch, extreme care should be used to avoid cutting through race and damaging hub.

   Bearing must be replaced once race is removed.

   CAUTION: Always wear safety glasses, gloves, and appropriate clothing when dealing with heat and open flames.

3. Remove M8 screws (1) holding retaining plate (2) and press plate from cover.

4. Press shaft seal (3) from the retaining plate. Shaft seal must be replaced once it is removed.

5. Press roller bearing (4a) from support cover.

6. Press shaft seal (5) from support cover. Shaft seal must be replaced once it is removed.

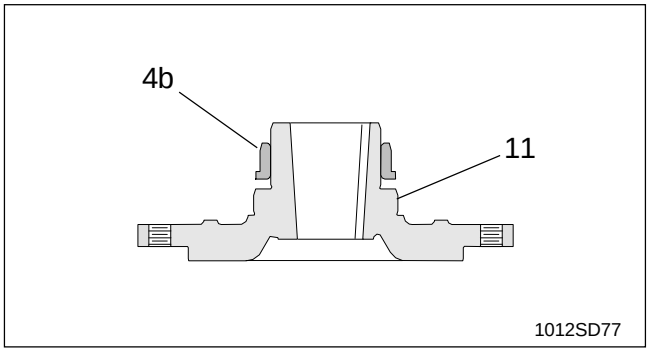

FIG. 4-4 BEARING RACE ON HUB

Assembly:

1. Press shaft seal (5) into support cover (6).

2. Separate roller bearing (4) into race and cage. Pack cage portion of bearing (4a) with bearing grease and press into support cover.

3. Press shaft seal (3) into retaining plate (2).

4. Install retaining plate on support cover with M8 screws (1). Secure screws using Loctite 242 or equivalent threadlocking sealant.

5. Press bearing race (4b) onto drum hub (11). Heating race on a hot plate or hot oil bath will make installation easier.

6. Install drum support cover *(Section 4.5).*

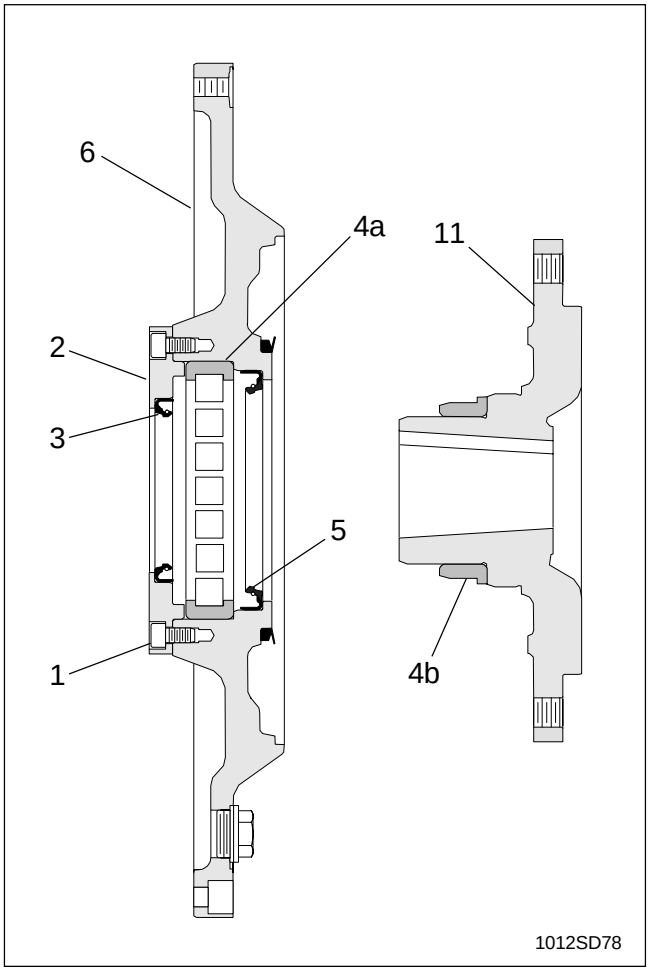

FIG. 4-5 SUPPORT COVER ASSEMBLY

4.7 Drivecase

See Section 4.3 for Drum Assembly Drawing

Removal:

1. Remove drums and scrapers bars *(Section 4.4).*

2. Remove support cover *(Section 4.5).*

3. Disconnect hydraulic hoses from drive motor. Machines with S/N 7100 00000 & above include a brake assembly on the front drum. On these machines it will also be necessary to disconnect the hydraulic line that engages the brake.

4. Remove the twelve M10 screws (7) holding the drivecase (27) to the drum support (21).

5. **Note:** *Before removing the drivecase, add reference marks to the drum support and the drivecase. This will help align the two pieces later on and make installation easier.*

   Remove the three M10 screw plugs (13) in the drive assembly flange and insert three M10 x 55 screws **(a)** in their place. Turn screws in to push drivecase from drum support. Pull complete drivecase from the drum support.

Installation:

Both the drive motor and brake assembly must be mounted to the drivecase before installing it in drum support. Make sure hydraulic fittings on drive motor and brake are installed and positioned correctly. Failure to position fittings properly could make it difficult to connect hydraulic lines after drivecase is installed *(Refer to Sections 4.9 & 4.11).*

1. Install Drivecase in drum support using twelve M10 screws (7). Secure screws using Loctite 242 or equivalent, and torque to 36 ft. lbs. (49 Nm).

2. Install the three M10 x 16 screws (13) into pusher holes. Secure using Loctite 242 or equivalent.

3. Apply Loctite 545 pipe sealant, or equivalent, to hydraulic fittings and connect hydraulic lines to drive motor and brake.

4. Clean inside of drum hub and tapered end of axle. Install drum hub (11) to axle when clean and dry. Install washer (10) and axle nut (9). Torque axle nut to 450 ft. lbs. (610 Nm).

5. Check oil level in drivecase.

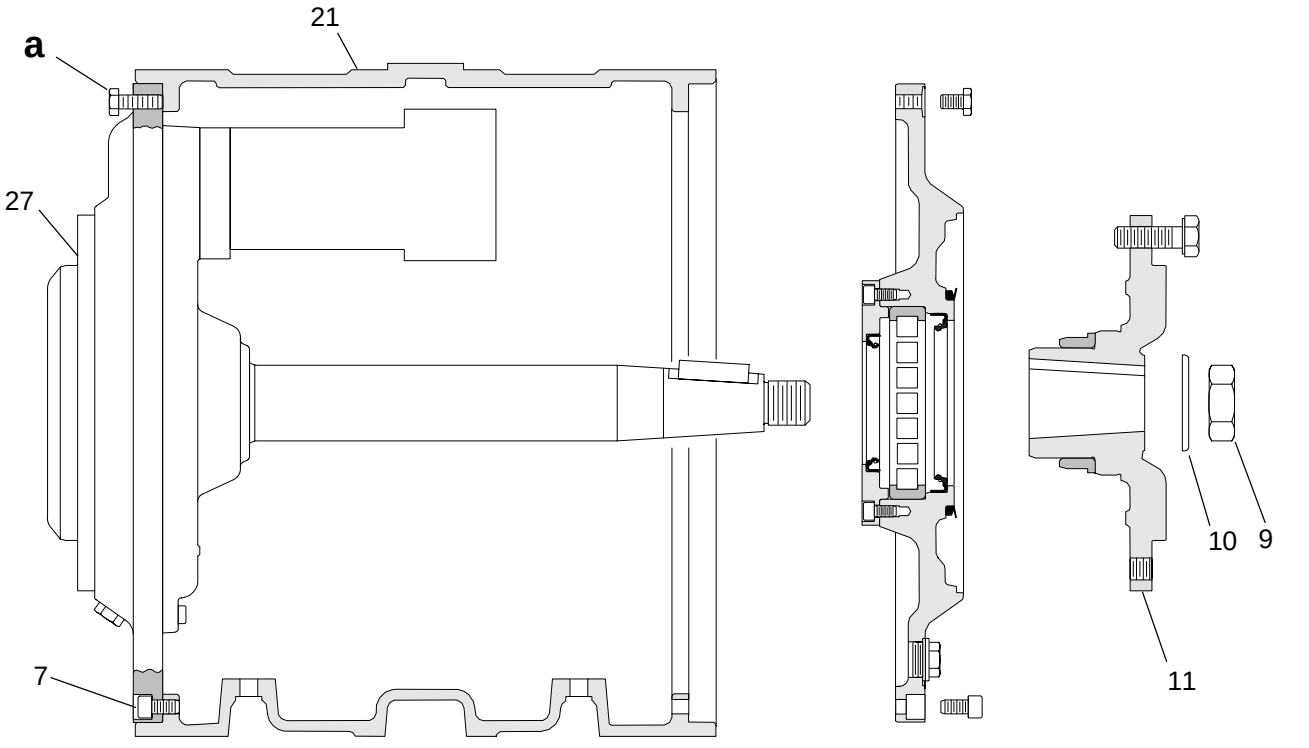

FIG. 4-6 DRIVECASE INSTALLATION

4.8 Drivecase - Exploded View

***Assembly Notes:**

Ref.	Sealant Loctite (Omnifit)	Torque Ft.Lbs. (Nm)
31	242 (220)	7(9)
32	242 (100)	43(58)
33	515	---
41	242 (100)	90(122)
46	242 (100)	7 (9)
56	242 (100)	36(49)
57	Silicone	---
60	242 (100)	36(49)

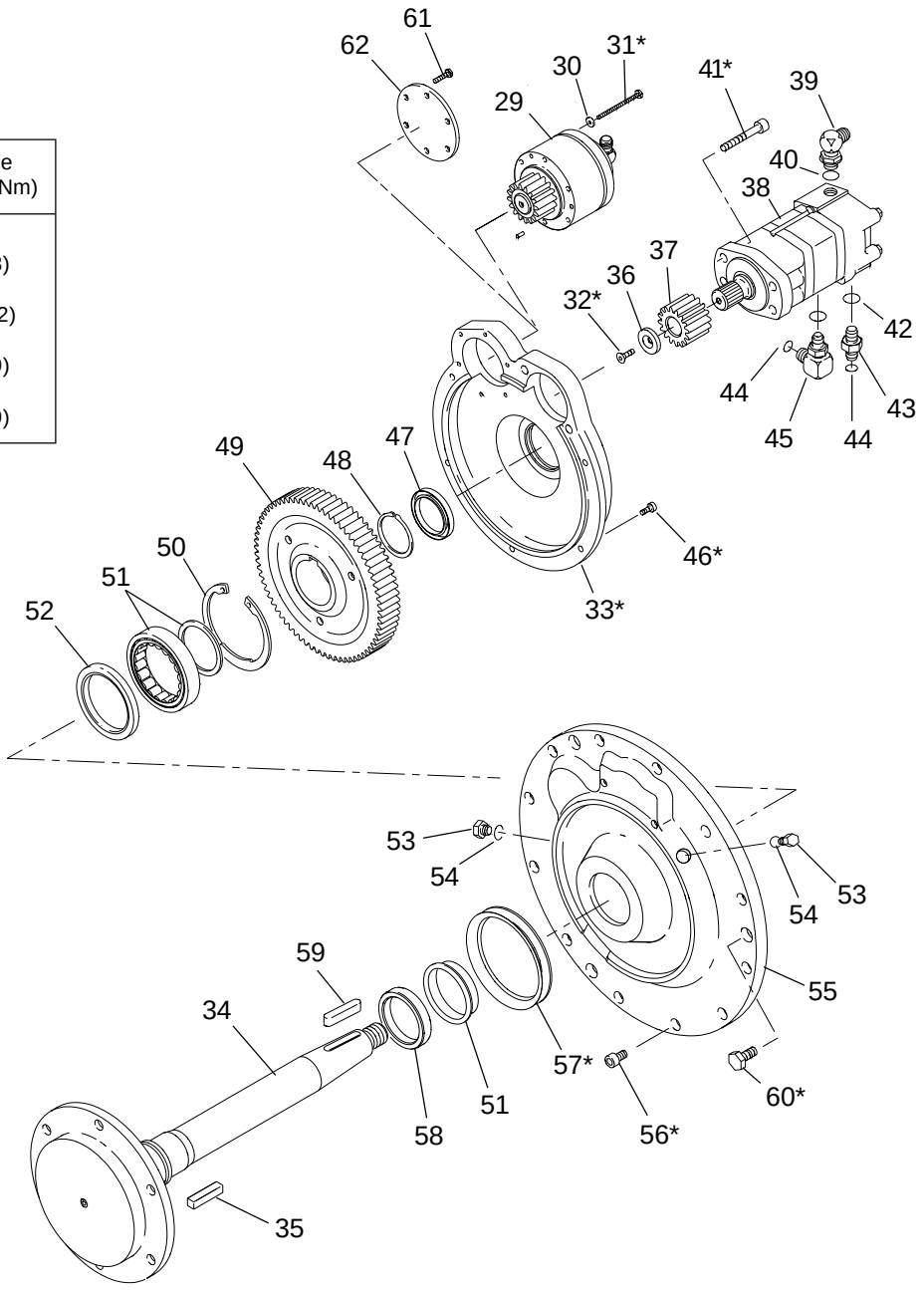

REF.	DESCRIPTION	QTY.
29	BRAKE ASS'Y.	1
30	WASHER	6
31	SCREW (M6 X 90)	6
32	SCREW (3/8-16X1)	1
33	COVER-GEAR	1
34	AXLE-DRIVE	1
35	KEY	1
36	WASHER	1
37	GEAR-PINION	1
38	MOTOR- HYD. DRIVE	1
39	FITTING-ELBOW	1
40	O-RING	1
41	SCREW (M12 X 70)	2
42	O-RING	2
43	FITTING	1
44	O-RING	2
45	FITTING-ELBOW	1
46	SCREW (M8 X 18)	5
47	SEAL-SHAFT	1
48	RETAINING RING	1
49	GEAR-DRUM DRIVE	1
50	RETAINING RING	1
51	BEARING-ROLLER	1

REF.	DESCRIPTION	QTY.
52	SEAL-SHAFT	1
53	SET-PLUG	3
54	O-RING	3
55	HOUSING-DRIVE	1
56	SCREW(M10 X 20)	12
57	SEAL-SHAFT	1
58	SPACER-RING	1
59	KEY	1
60	SCREW (M10 X 16)	3
61	SCREW (M6 X15)	6
62	COVER-BRAKE	1

1007SD53

Recommended Tools

Socket - 1-7/8", 19 mm, 24 mm
Allen Wrench - 6 mm, 8 mm, 10 mm, 14 mm
Open End Wrench - 19 mm
Torque Wrench
Loctite 242, 545 (or Equivalents)
Three M16 x 55 Screws
Three M10 x 55 Screws
Silicone
Arbor Press
Propane Torch
Grease - Shell Alvania No. 2

4.9 Brake (S/N 7100 00000 & Above)

See Section 4.8 for Drivecase Assembly Drawing

The brake is located on the front drum only and is mounted to the gear cover of the Drivecase. To remove the brake the complete Drivecase must be removed from the drum support.

Removal:

1. Remove drums from roller *(Section 4.3).*
2. Remove drivecase from drum support *(Section 4.7).*
3. Remove the six M6 screws (31) and washers (30) holding brake assembly (29) and remove brake assembly from drivecase.

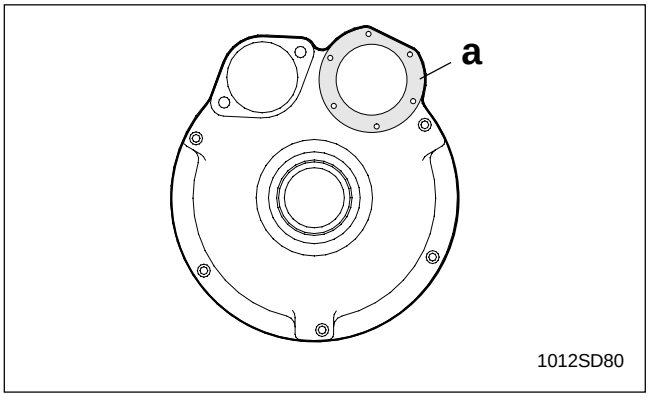

FIG. 4-7 BRAKE MOUNT

Installation:

1. Apply Loctite 515 gasket compound to face of gear cover where brake mounts **(a)**.
2. Mount the brake assembly (29) with six M6 screws (31) and washers (30). Apply Loctite 271 or an equivalent high strength threadlocker to screws, and torque to 7 ft.lbs. (9 Nm).
3. Position hydraulic fitting (77) on brake as shown.
4. Install drivecase to drum support *(Section 4.7).*

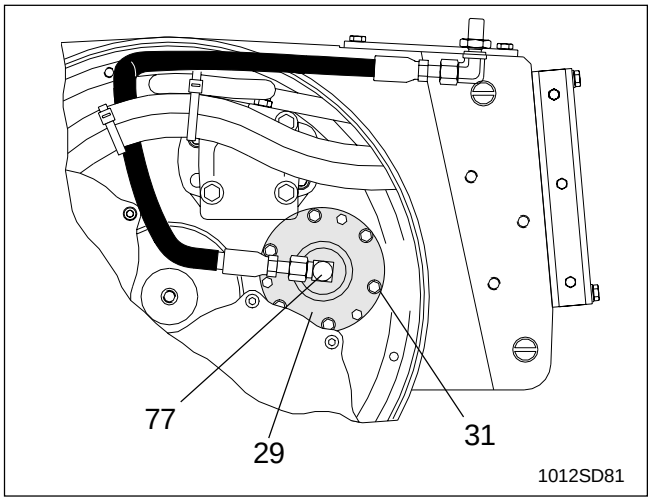

FIG. 4-8 BRAKE INSTALLATION

4.10 Servicing Brake

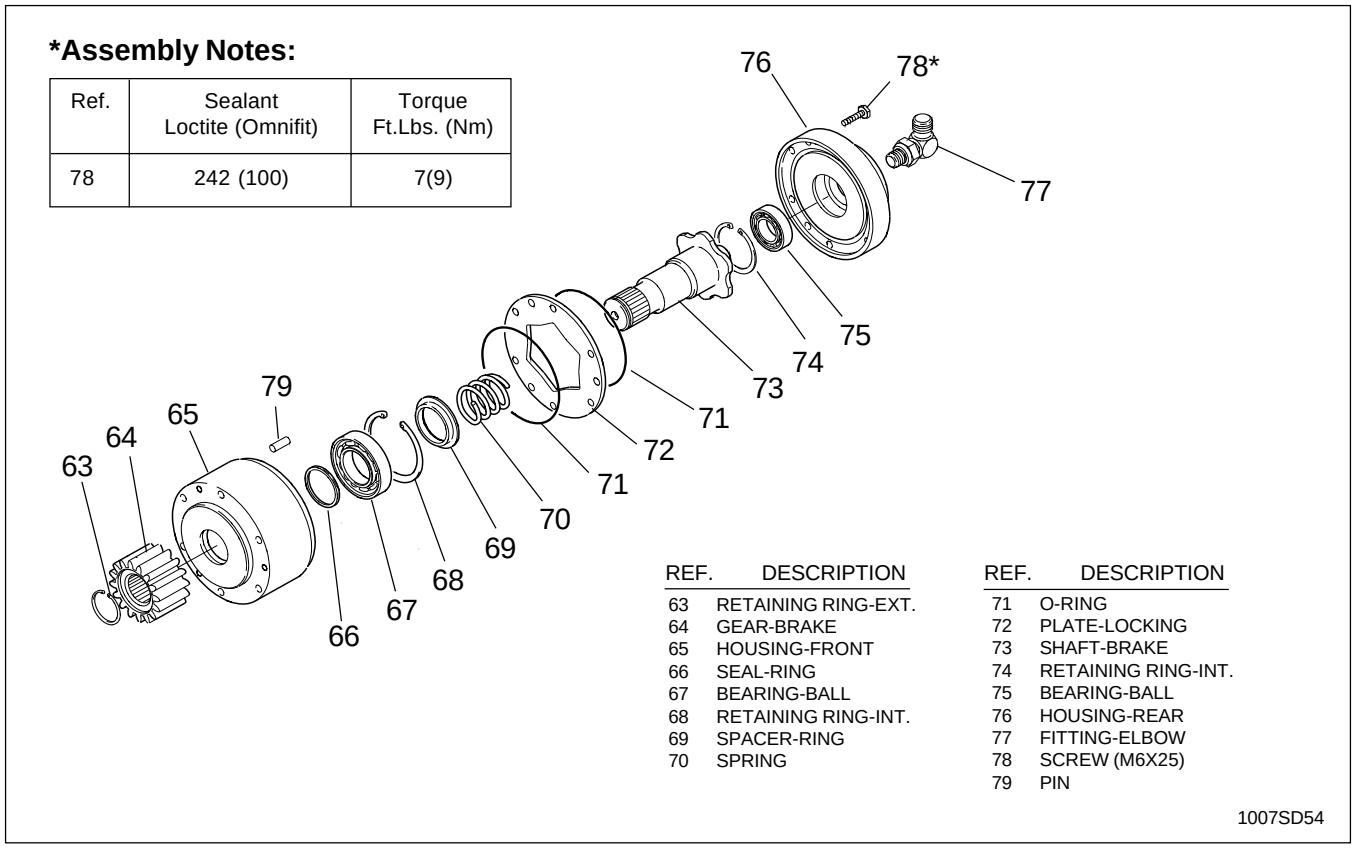

FIG. 4-9 BRAKE ASSEMBLY

Disassembly:

1. Remove fitting (77).
2. Remove retaining ring (63) and pull gear (64) off shaft.
3. Remove the three M6 screws (78) which hold the brake assembly together.

   Note: W*hen removing last screw, rear housing may "pop" off front housing due to spring tension.*
4. Disassemble interior pieces (69-73).
5. Remove retaining ring (68) from front housing (65) and press out ball bearing (67).
6. Remove seal (66).
7. Remove retaining ring (74) from rear housing (76) and press out ball bearing (75).

Assembly:

1. Press bearings (67, 75) into front and rear housings and secure in place using retaining rings (68, 74).
2. Install seal (66) into front housing (65).
3. Insert ring spacer (69) into front housing.
4. Set front housing on face and insert spring (70), O-rings (71), shaft (73) and locking plate (72).
5. Secure rear housing assembly to front housing with three M6 screws (78). Secure screws using Loctite 242 or equivalent, and torque to 7 ft.lbs. (9 Nm).
6. Install fitting (77) to rear housing assembly.
7. Install gear (64) on shaft and secure with retaining ring (63).

4.11 Drive Motor

See Section 4.8 for Drivecase Assembly Drawing

The drive motor is mounted to the gear cover of the Drivecase. When replacing the drive motor the complete Drivecase must be removed from the drum support.

Removal:

1. Remove drums from roller *(Section 4.4).*

2. Remove drivecase from the drum support *(Section 4.7).*

3. Loosen the two M12 screws (41) and remove the hydraulic drive motor (38).

4. Use a small propane torch and heat the countersunk screw (32) holding the drive pinion to the motor. This will break down the threadlocking sealant. Remove screw and washer, and pull drive pinion (37) off motor.

Installation:

1. Install drive pinion (37) on motor shaft. Secure in place with washer (36) and screw (32). Apply Loctite 271, or an equivalent high strength threadlocker, to screw before assembling.

2. Apply Loctite 515 gasket compound to face of gear cover where drive motor mounts **(a)**.

3. Mount the hydraulic drive motor with two M12 screws (41). Apply Loctite 242, or equivalent, to screws and torque to 90 ft.lbs. (122 Nm).

4. Align the hydraulic fittings **(b)** as shown.

   Note: *Failure to align fittings properly could make it difficult to connect hydraulic lines after drive assembly is installed.*

5. Install Drivecase *(Section 4.7).*

Seal Kit:

Order Seal Kit P/N 76630 for replacement of internal motor seals and O-rings. Refer to installation instructions included with kit.

Note: *Special knowledge and skill is required when working on hydraulic components. If you are lacking the necessary skills and know-how, contact a competent hydraulic repair facility for assistance.*

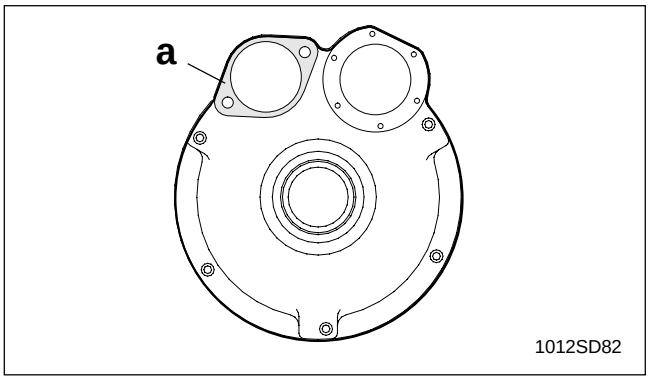

FIG. 4-10 DRIVE MOTOR MOUNT

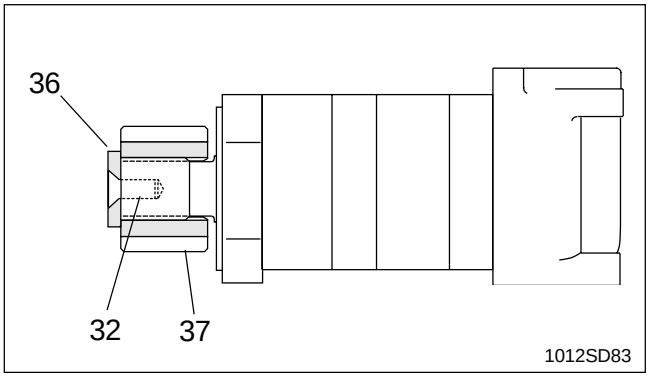

FIG. 4-11 DRIVE MOTOR PINION INSTALLATION

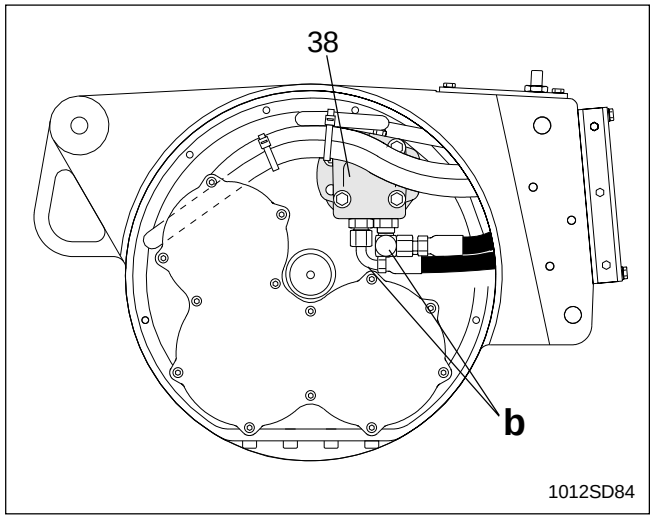

FIG. 4-12 DRIVE MOTOR CONNECTIONS

4.12 Drivecase Components

Disassembly:

1. Remove drums from roller *(Section 4.4).*
2. Remove drivecase *(Section 4.7).*
3. Remove drain plug and drain oil from drivecase.
4. Remove drive motor and brake assembly from drivecase.
5. Loosen the five M8 screws (46) and lift gear cover (33) from drive housing.
6. Press shaft seal (47) from gear cover.
7. Remove retaining ring (48) holding gear (49) to drive axle (34). Use three M12 x 90 hardened bolts **(c)** (P/N 11411) to push drive gear from drive housing and off of drive axle. If necessary, heat gear to aid in its removal.
8. Remove key (35) from drive axle and pull axle from drive housing. If necessary, use three M16 x 55 screws **(d)** (P/N 11518) to push axle from drive housing.
9. Remove retaining ring (50) and press roller bearing cage (51a) from drive housing.

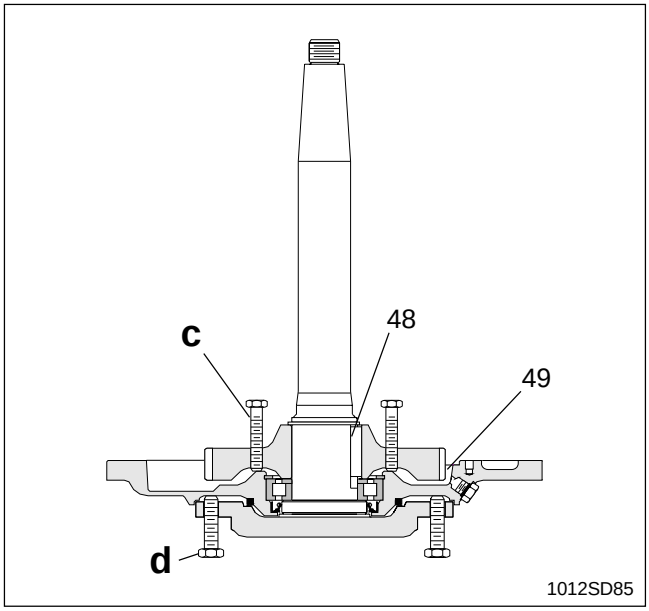

FIG. 4-13 REMOVING DRIVE GEAR

10. Remove seals (52, 57) from drive housing.
11. Remove key (56) from drive axle.
12. Use a small propane torch and heat inner bearing race (51b) and spacer (58) sufficiently until they drop off axle.

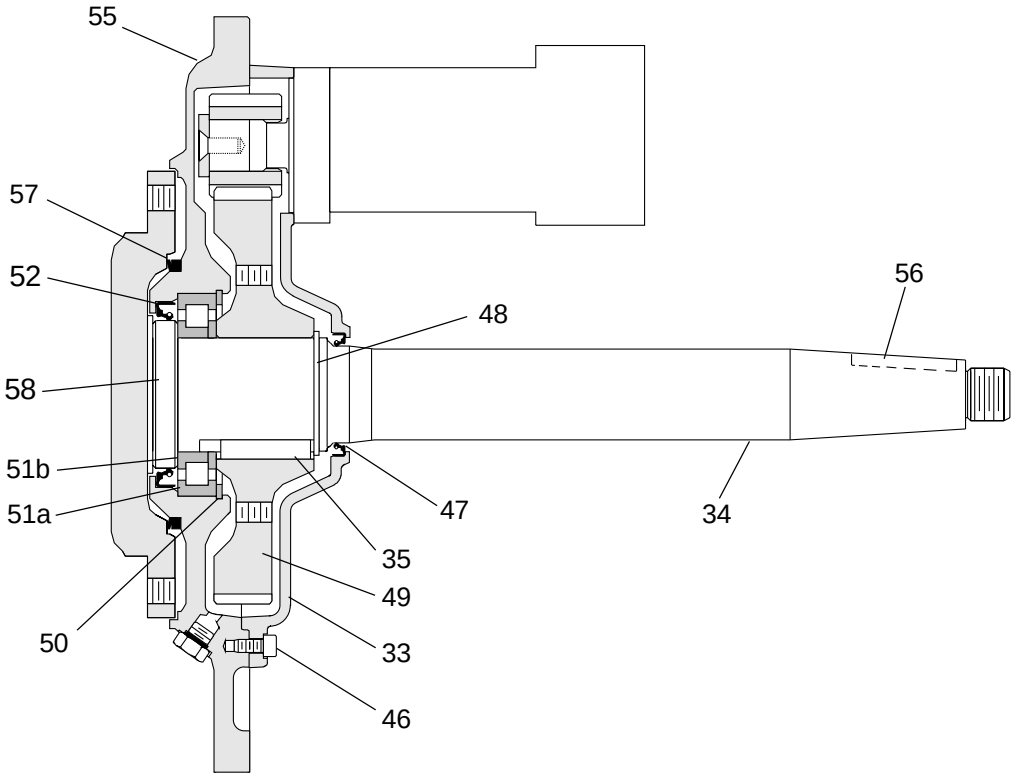

FIG. 4-14 DRIVECASE ASSEMBLY CROSS-SECTION

Drivecase Components, cont'd

Assembly:

1. Heat spacer ring (58) on a hot plate or in oil bath and press onto drive axle (34).
2. Heat roller bearing race (51a) and press onto drive axle.
3. Press shaft seal (52) into drive housing (55).
4. Apply a bead of silicone to area on drive housing **(a)** where wiper seal (57) will seat. Install seal on housing.
5. Apply a thin film of low-temp #2 grease to drive axle **(b)** to trap any excess dust.
6. Press bearing cage (51b) in drive housing. Secure it to axle with retaining ring (50).
7. Slide axle into drive housing carefully to avoid damaging seal (52).
8. Place key (35) in drive axle.
9. Slide bearing washer (51c) over axle and onto bearing.

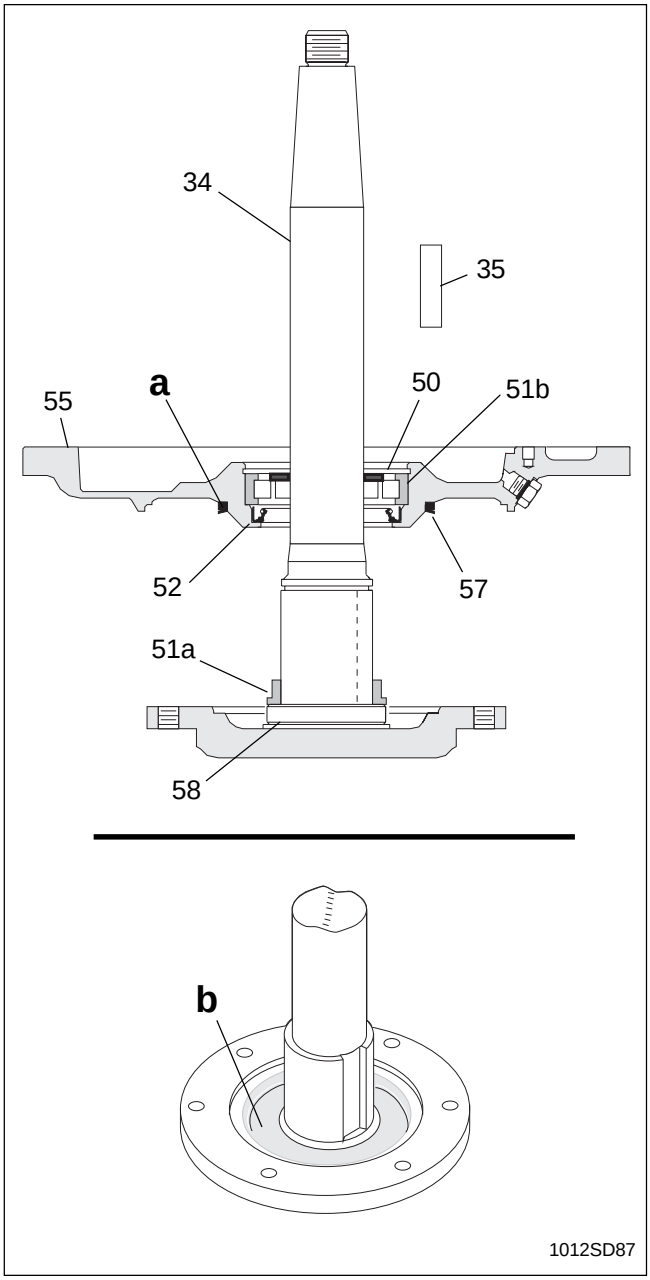

FIG. 4-15 INSTALLING AXLE

Assembly Cont'd

10. Heat drive gear (49) for approximately one half hour in a 350° oven and then press it onto axle.

11. Attach retaining ring (48) to secure gear on axle.

12. Press shaft seal (47) into gear cover (33).

13. Apply Loctite 515 or an equivalent gasket compound to machined faces **(c)** of drive housing (55), as shown.

14. Install gear cover (33) to drive housing with five M8 screws (46). Use Loctite 242 or equivalent on screws and torque to 18 ft.lbs.

15. Install drive motor and brake *(Sections 4.11 & 4.9).*

16. Add 8 oz. of SAE 30W oil to drivecase through fill plug opening (*Section 4.7).*

17. Install complete drivecase in drum support *(Section 4.7).* Re-check oil level.

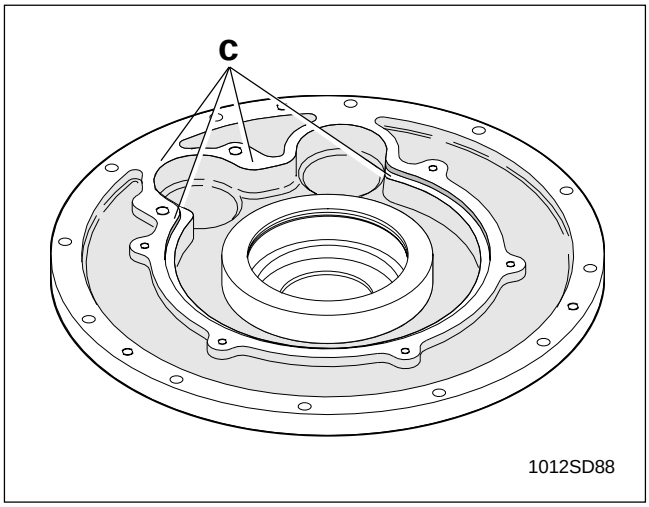

FIG. 4-16 SEALING HOUSING

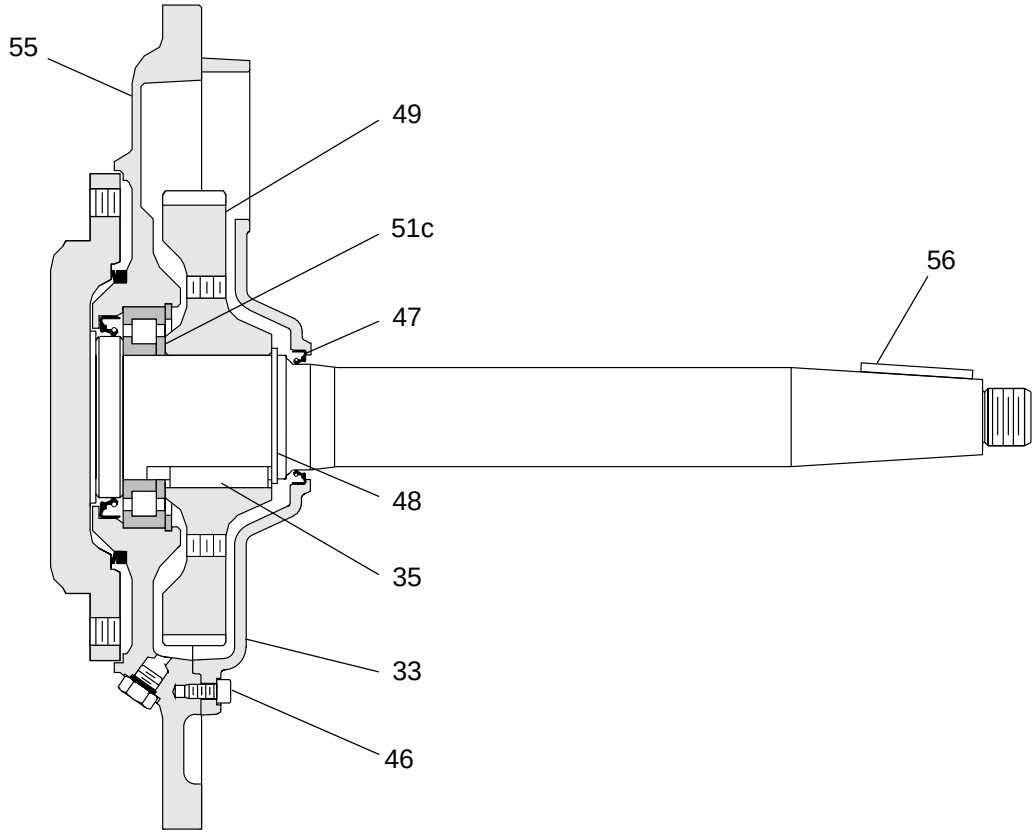

FIG. 4-17 DRIVECASE

NOTES

UNIT 5

EXCITER ASSEMBLY

5.1 Introduction 5-1
5.2 Oil Requirements 5-1
5.3 Exciter Assembly - Exploded View 5-2
5.4 Exciter Cross Section 5-4
5.5 Removing and Servicing Exciter Assembly 5-5
5.6 Exciter Motor, Coupling & Pinion Gear 5-8
5.7 Exciter Motor 5-10

5.1 Introduction

This section covers disassembly and assembly of the complete exciter assembly, including replacement of gears, bearings, exciter motor, and motor coupling.

IMPORTANT

Due to the high rpm and vibration present in this component during operation, it is important to follow sealant and torque notes carefully during assembly.

5.2 Oil Requirements

The exciter bearings and gears run in an oil bath and are splash lubricated. When servicing exciter be sure to check oil level **(a)** before installing it back into drum.

Note: *Although oil can be added through the oil level plug, it is easier to add oil before attaching the base cover during reassembly.*

Capacity: 32 oz. (1000 ml) SAE 30W.

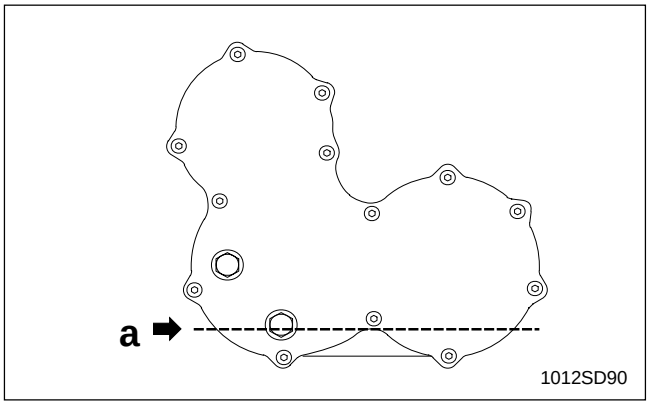

FIG. 5-1 EXCITER OIL LEVEL

5.3 Exciter Assembly - Exploded view

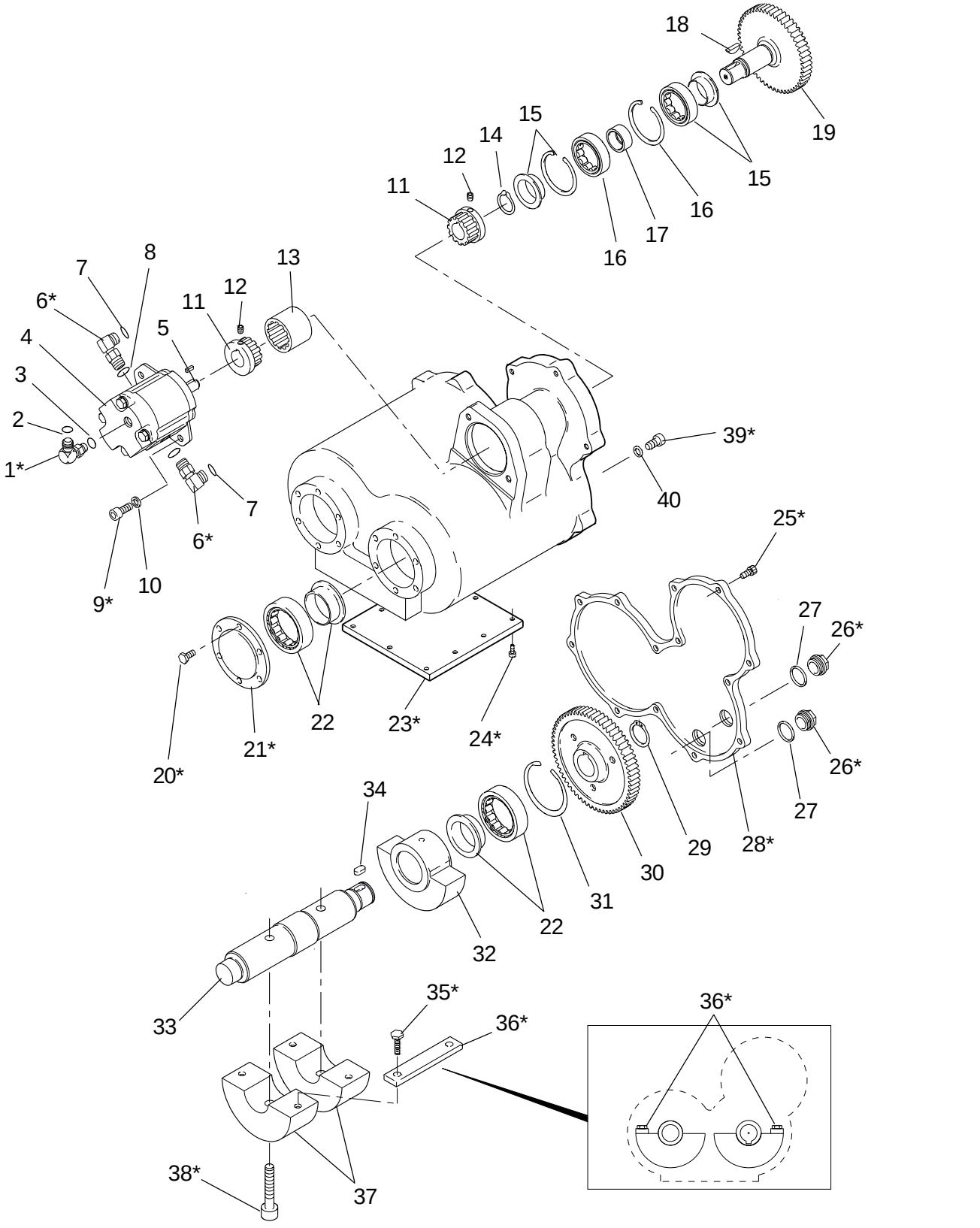

Exciter Components

Ref.	Description	Qty.
1	Fitting-elbow	1
2	O-Ring	1
3	O-Ring	1
4	Motor-hyd. gear	1
5	Key-Woodruff	1
6	Fitting-elbow	2
7	O-Ring	2
8	O-Ring	2
9	Screw (M10x25)	2
10	Washer-lock	2
11	Coupling-flexshaft	1
12	Setscrew (5/16"x5/8)	2
13	Sleeve-coupler	1
14	Retaining ring-ext.	1
15	Bearing-roller	2
16	Retaining ring-int.	2
17	Spacer-bearing	1
18	Key-Woodruff (¼x1)	1
19	Gear-pinion	1
20	Screw (M8x18)	12
21	Cover	2
22	Bearing-roller	4
23	Cover-exciter base	1
24	Screw (M6x10)	10
25	Screw (M8x16)	13
26	Plug (M26x1.5)	2
27	Seal-ring	2
28	Cover-exciter gear	1
29	Retaining ring	2
30	Gear-exciter	2
31	Retaining ring-int.	2
32	Weight-variable	2
33	Shaft-exciter	2
34	Key	2
35	Screw (M10x30)	4
36	Mount-weight	2
37	Weight-exciter	4
38	Screw (M16x70)	4
39	Screw (M10x12)	1
40	Seal-ring	1

*Assembly Notes

Ref.	Sealant Loctite (Omnifit)	Torque Ft.Lbs. (Nm)
1	545 (50)	--
6	545 (50)	--
9	242 (100)	36 (49)
20	242 (100)	18 (24)
21	515 (10)	--
23	515 (10)	--
24	242 (100)	7 (10)
25	242 (100)	18 (24)
26	222 (50)	36 (49)
28	515	--
35	271 (220)	36 (49)
38	271 (220)	155 (210)
39	515	36 (49)
36	Mounts must be installed on weights as shown on page 5-7.	

Recommended Tools

Socket - 17 mm, 19 mm, 24 mm
Allen Wrench - 4 mm, 6 mm, 8 mm, 10 mm, 14 mm
Open End Wrench - 19 mm
Torque Wrench
Loctite 242, 271, 427, 545, 515 (or Equivalents)
Three M16 x 55 Screws
Snap Ring Pliers
Arbor Press
Rubber Mallet
Gear Puller

5.4 Exciter Cross Section

Note: *Refer to Exciter Components on previous page for item numbers.*

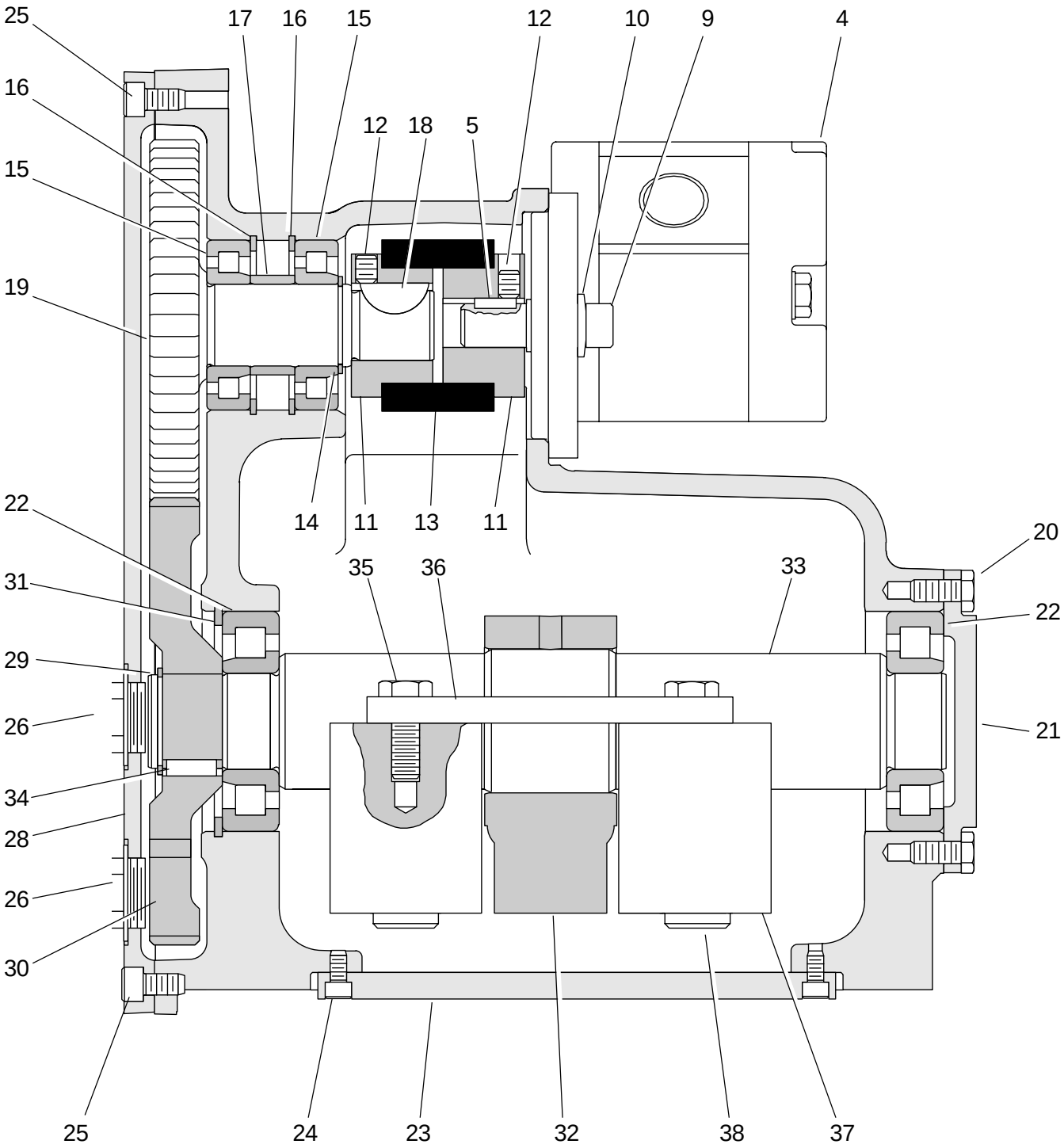

1012SD91

5.5 Removing and Servicing Exciter Assembly

See Section 5.3 for Exciter Assembly Drawing

Disassembly:

Note: *The exciter is installed in the drum and assembled together using threadlocking compounds to secure bolts and screws. Heat screws before removal, using a small propane torch, to break down the threadlocking compound.*

1. Remove drum, drum support cover, and drivecase assembly *(Sections 4.4, 4.5, 4.7).*

2. Disconnect hydraulic lines from exciter motor. Cap and plug open connections.

3. Remove the eight M12 screws holding the exciter assembly to the drum. Lift exciter assembly up and out of drum.

4. Remove drain plug (26) from exciter housing and drain oil.

5. Invert exciter housing and remove the ten M6 screws (24) holding the bottom base cover (23) to the exciter housing. Remove cover.

6. Rotate exciter shafts to gain access to weights.

WARNING

The exciter weights can rotate freely. Use caution when removing weights to prevent pinching fingers or hands inside exciter housing.

7. Use a small propane torch and heat the four M10 screws (35) securing mount (36) to weights. Remove screws and mount.

8. Heat the four M16 (38) screws holding the fixed weights to shafts. This will break down the threadlocking compound. Remove screws and weights.

9. Remove the thirteen M8 screws (25) holding exciter gear cover (28) to housing.

10. Remove retaining rings (29) holding exciter gears to shafts.

11. Insert three M10 x 55 pusher bolts into threaded holes **(a)** on exciter gear (30). Turn bolts in until exciter gear is pushed free from housing. Repeat for other gear.

12. Remove keys (34) from exciter shafts.

13. Remove large retaining rings (31) which secure gear side bearings in housing.

14. From other side of exciter housing, loosen the M8 screws (20) and remove covers (21) from housing.

15. Press or use a rubber mallet to drive exciter shaft and bearing **(c)** all the way through housing as shown **(b)**. Remove variable weight **(d)** as shaft slides through housing. Repeat for other shaft.

16. Press remaining shaft bearings from housing.

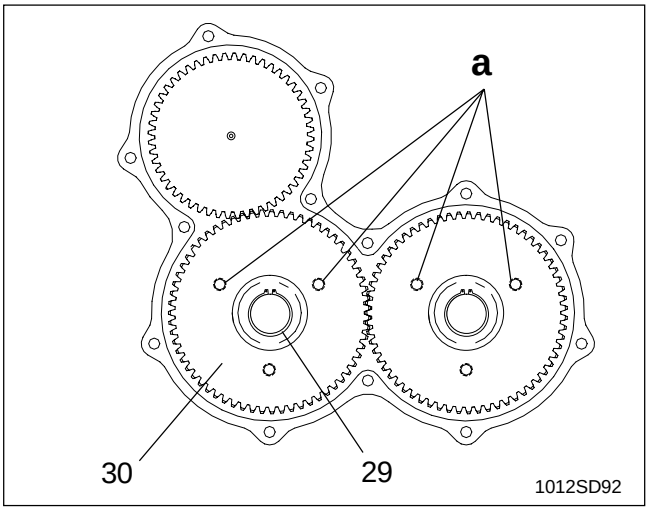

FIG. 5-2 REMOVING EXCITER GEARS

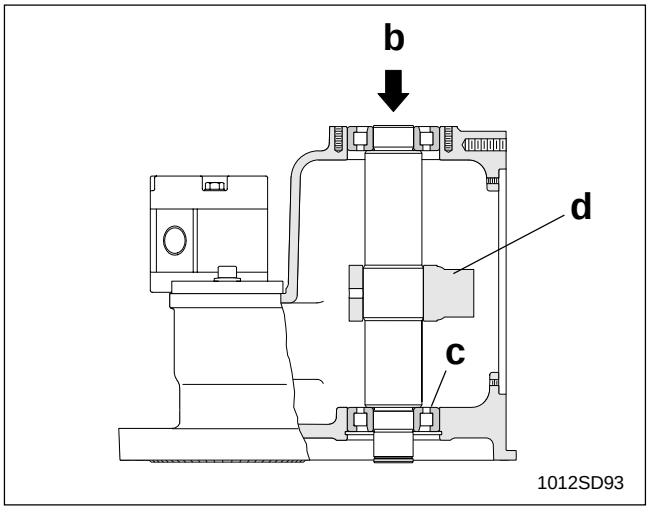

FIG. 5-3 REMOVING EXCITER SHAFT

Removing & Servicing Exciter Assembly - cont'd

Assembly:

Note: *Complete steps 1 through 8 with exciter casing positioned as shown in Figure 5-6.*

1. Lightly lubricate each exciter shaft (33) with 10W30 and press inner bearing races (22) onto both ends of shafts.

2. Install bearing cage (22) into exciter housing. Outer edge of cage should be flush with outer machined surface of housing. *Figure 5-5*.

3. Apply Loctite 515 or equivalent gasket compound to cover (21), and fasten to housing. Secure screws using Loctite 242 or equivalent, and torque to 18 ft.lbs. (24 Nm).

4. Coat inside of weight with oil. Insert shaft into housing, sliding it through weight, and into bearing as shown **(a)**.

5. Press bearing cage (22) into gear side of housing and secure it in place with retaining ring.

6. Repeat procedure for other shaft.

7. With keyways **(b)** pointing up, install keys and place gears onto shafts.

   Note: *Gears must be "timed". To time gears, insert four M10 screws into upper push holes **(c)**, lay a straight edge **(d)** across both gears at screws and align screws to straight edge. The screws must line up within one gear tooth of each other as shown. Both shaft keys must be facing up **(b).***

8. Secure gears on shafts with retaining clips (29).

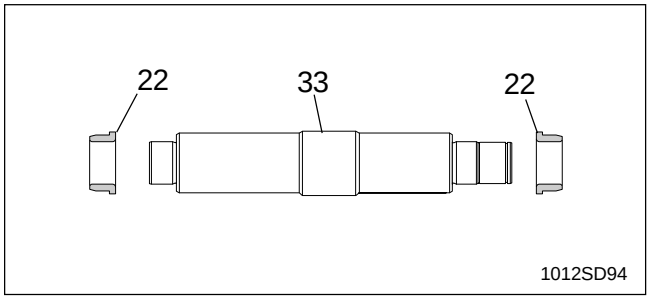

FIG. 5-4 ASSEMBLING EXCITER SHAFT BEARINGS

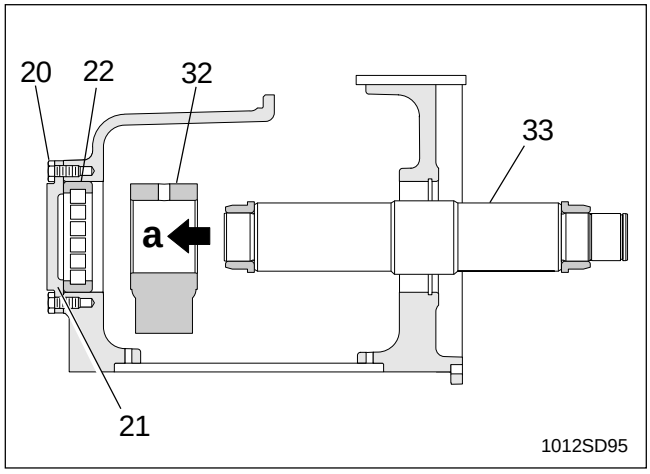

FIG. 5-5 INSTALLING EXCITER SHAFT

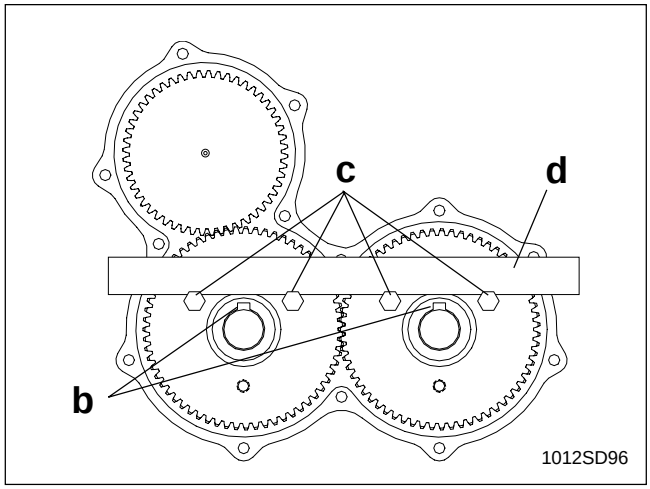

FIG. 5-6 TIMING EXCITER SHAFTS

Removing & Servicing Exciter Assembly- cont'd

Note: *Complete steps 9 through 15 with exciter casing inverted as shown in Figure 5-7.*

9. Slide free weights to center of exciter shafts. Install fixed weights (37) with M16 screws (38). Use Loctite 271, or an equivalent high strength threadlocker, to secure screws on shaft. Torque screws to 155 ft.lbs. (210 Nm).

   Note: *The holes in the shafts are chamfered on one end. Install weights so bolts will thread into chamfered end .*

10. Secure weight mounts (36) to weights with M10 screws (35). Use Loctite 271 on screws and torque to 36 ft.lbs. (49 Nm).

    CAUTION: For proper machine performance, it is essential that weight mounts (36) be mounted correctly. Fasten weight mounts as shown in Figure 5-7.

11. Add 32 oz. (946 ml) of 10W30 to exciter housing through base opening.

12. Apply Loctite 515 or equivalent gasket compound to base of exciter **(d)**. Install exciter base cover (23) to housing with M6 screws (24). Use Loctite 242 on screws and torque to 7 ft.lbs. (10 Nm).

13. Apply Loctite 515, or equivalent gasket compound, to machined face **(e)** of exciter gear cover (28). Be sure to coat around entire face of cover including around holes to prevent exciter from leaking. Secure the cover to housing. Use Loctite 242 on screws and torque to 18 ft.lbs. (24 Nm).

14. Double check oil level. Add or drain oil as required.

15. Install exciter assembly in drum. Secure bolts using Loctite 271, or an equivalent high strength threadlocking compound, and torque bolts to 88 ft. lbs. (120 Nm).

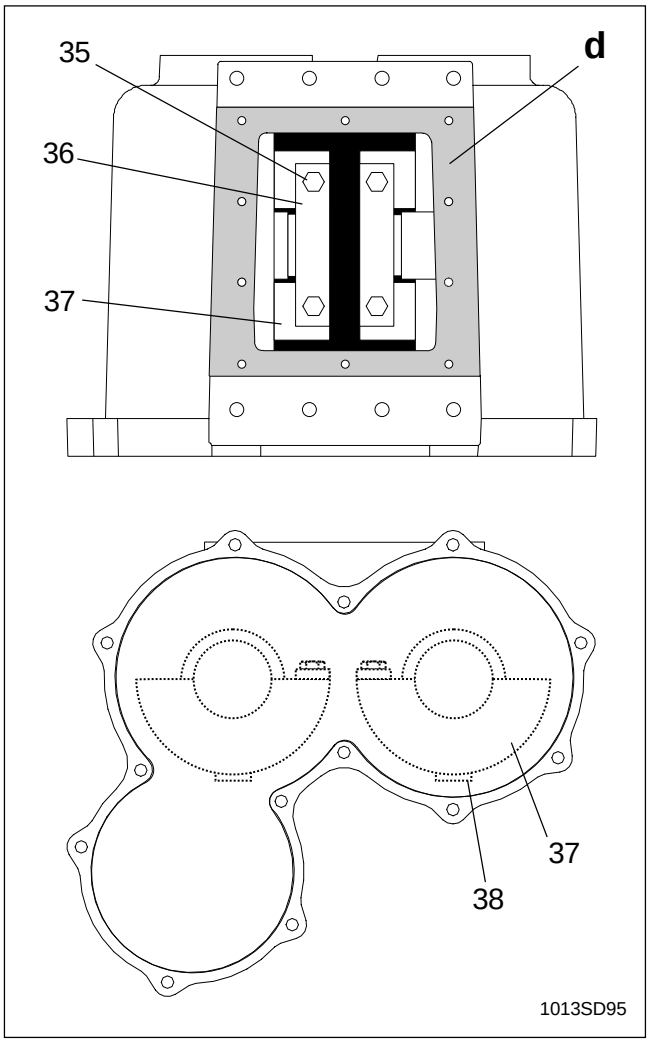

FIG. 5-7 WEIGHT ORIENTATIONS

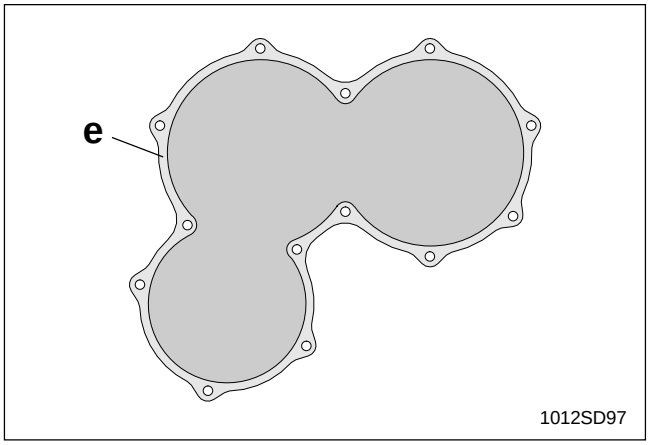

FIG. 5-8 SEALING EXCITER GEAR COVER

5.6 Exciter Motor, Coupling & Pinion Gear

Replacement of the exciter pinion gear, bearings, and coupling requires removal of the exciter assembly from the drum as described below. Replacement, or service, to only the exciter motor can be performed by removing the drum support cover *(Section 4.5)* to gain access to the motor.

To remove complete coupling or replace exciter pinion bearings, follow procedure below.

See Section 5.3 for Exciter Assembly Drawing

Removal:

1. Remove support cover and drivecase assembly from drum *(Sections 4.5 & 4.7).*
2. Disconnect hydraulic lines from exciter motor. Remove the eight M12 screws underneath bottom of drum which hold exciter assembly in place. Remove exciter assembly and drain oil (Section 5.5).
3. Remove exciter base cover (23).
4. Remove exciter gear cover (28).
5. Remove exciter motor (4).
6. Pull sleeve coupler (13) from inner coupling (11) on pinion gear shaft (19).
7. Reach through bottom of exciter housing and loosen set screw (12a) holding coupling to pinion gear shaft. Remove inner coupling by prying off with large screw driver or gear puller.
8. Remove retaining ring (14).
9. Remove key (18) from pinion gear shaft in housing.
10. Use a press or rubber mallet to drive pinion gear (19) out of housing as shown **(a)**. The roller bearings will remain in the housing.
11. Remove spacer (17) and bearing race from pinion gear shaft.
12. Drive roller bearing out of housing using a rubber mallet and steel punch as shown **(b)**. The bearing will be damaged or destroyed in the process and must be replaced.
13. Remove retaining rings (16) from housing.
14. Press remaining bearing from housing.

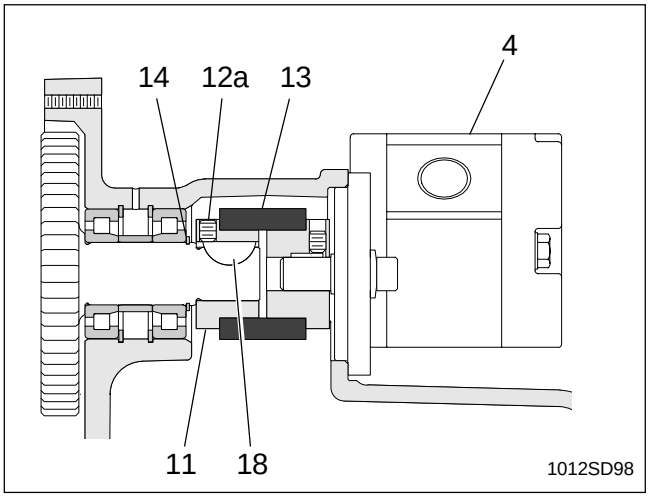

FIG. 5-9 EXCITER COUPLING

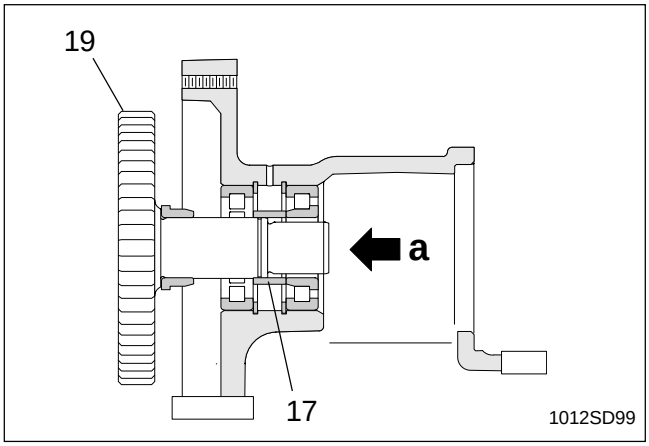

FIG. 5-10 REMOVING EXCITER PINION GEAR

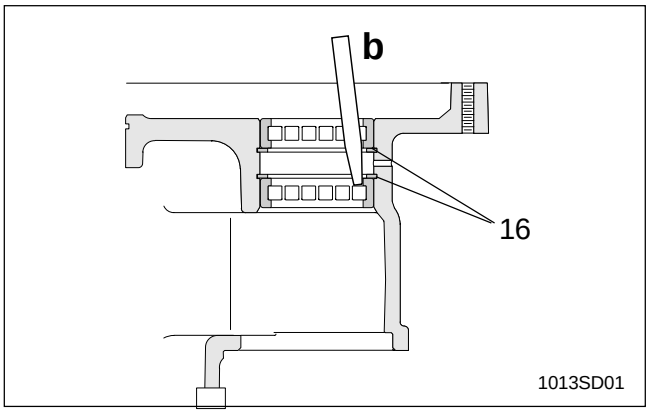

FIG. 5-11 REMOVING PINION GEAR BEARINGS

Installation:

1. Press bearing race (15a) on pinion gear shaft (19).
2. Install retaining rings (16) in housing.
3. Press both roller bearing cages (15) into housing against retaining rings.
4. Slide spacer (17) onto pinion gear shaft.
5. Slide pinion gear into housing and through roller bearings **(c)**.
6. Face exciter housing down so pinion gear is resting against a solid surface. Press remaining bearing race **(d)** over shaft until it rests against spacer.
7. Install retaining ring (14).
8. Install woodruff key (18) on pinion gear shaft.
9. Install coupling (11a) onto pinion gear shaft with rubber mallet. Apply Loctite 242, or equivalent, to set screw (12a) in coupling and tighten set screw against shaft.
10. Slide flex-coupling (13) onto inner coupling.
11. Place key (5) onto shaft of exciter motor (4) and install coupling (11b). Apply Loctite 242, or equivalent, to set screw (12b) in coupling and tighten it against shaft.
12. Install motor on exciter housing with lockwashers (10) and M10 screws (9). Secure screws using Loctite 242, or equivalent, and torque to 36 ft.lbs. (49 Nm).
13. Apply a bead of Loctite 515 gasket compound to machined face of exciter gear cover (28). See *Figure 5-8*. Secure the cover with thirteen M8 screws (25). Use Loctite 242 on screws and torque to 18 ft.lbs. (24 Nm) (*Section 5.5).*
14. Add 32 oz. of SAE 30W oil to exciter and install exciter base cover (23) to housing with M6 screws (24) . Use Loctite 242 on screws and torque to 7 ft.lbs. (10 Nm) (*Section 5.5).*
15. Double check oil level. Add or drain oil as required *(Section 5.5).*

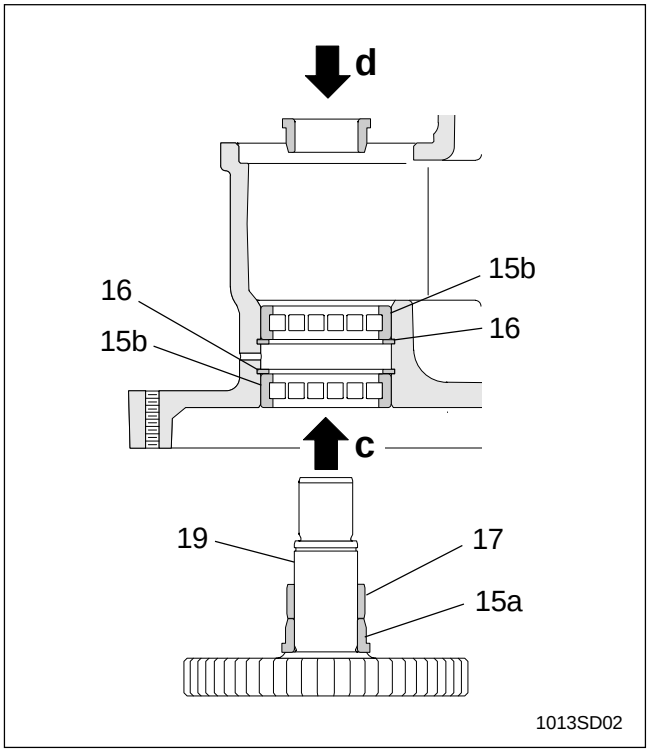

FIG. 5-12 INSTALLING PINION GEAR & BEARINGS

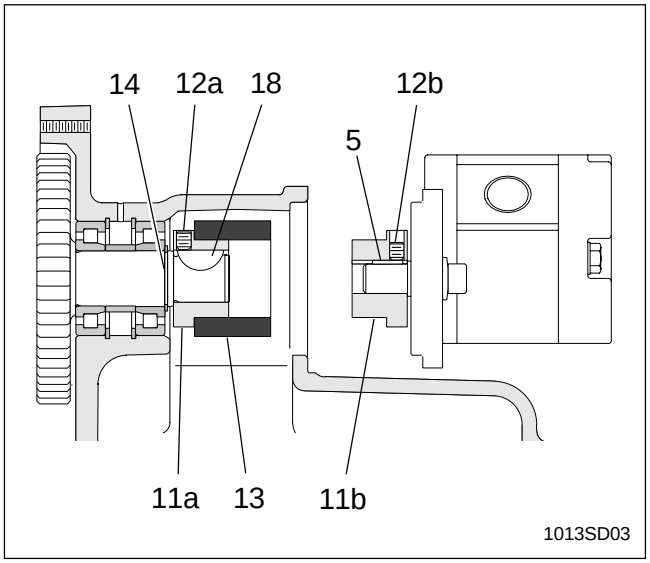

FIG. 5-13 INSTALLING EXCITER MOTOR & COUPLING

5.7 Exciter Motor

Seal Kit:

Order Seal Kit P/N 80500 for replacement of internal motor seals and O-rings. Refer to installation instructions included with kit.

Note: *Special knowledge and skill is required when working on hydraulic components. If you are lacking the necessary skills and know-how, contact a competent hydraulic repair facility for assistance.*

Indexing Fittings:

All hydraulic fittings should be installed on motor before assembly onto exciter. Fittings must be installed as shown to ensure proper connection of hoses inside drum.

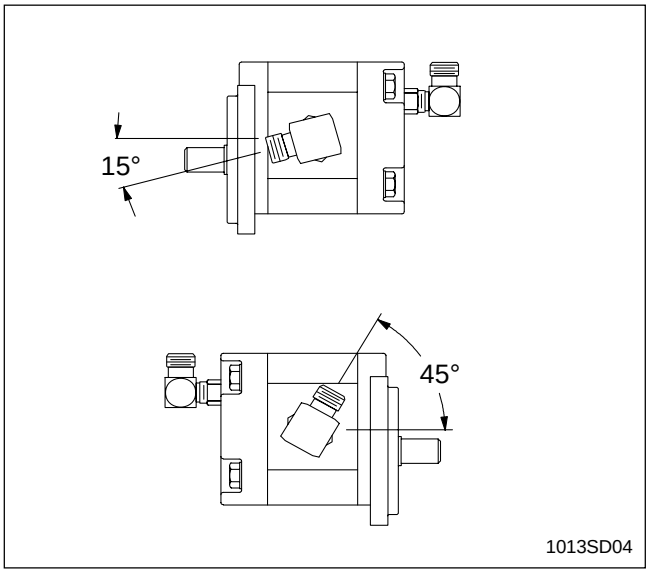

FIG. 5-14 INDEXING HYDRAULIC FITTINGS

UNIT 6

FRAME

6.1 Shockmount Installation Exploded View 6-1
6.2 Replacing Shockmounts 6-2
6.3 Hydraulic Hose Clamps 6-4
6.4 Drum Supports 6-5
6.5 Articulated Joint & Steering Cylinder - Exploded View 6-7
6.6 Articulated Joint 6-8
6.7 Steering Cylinder 6-10

6.1 Shockmount Installation - Exploded View

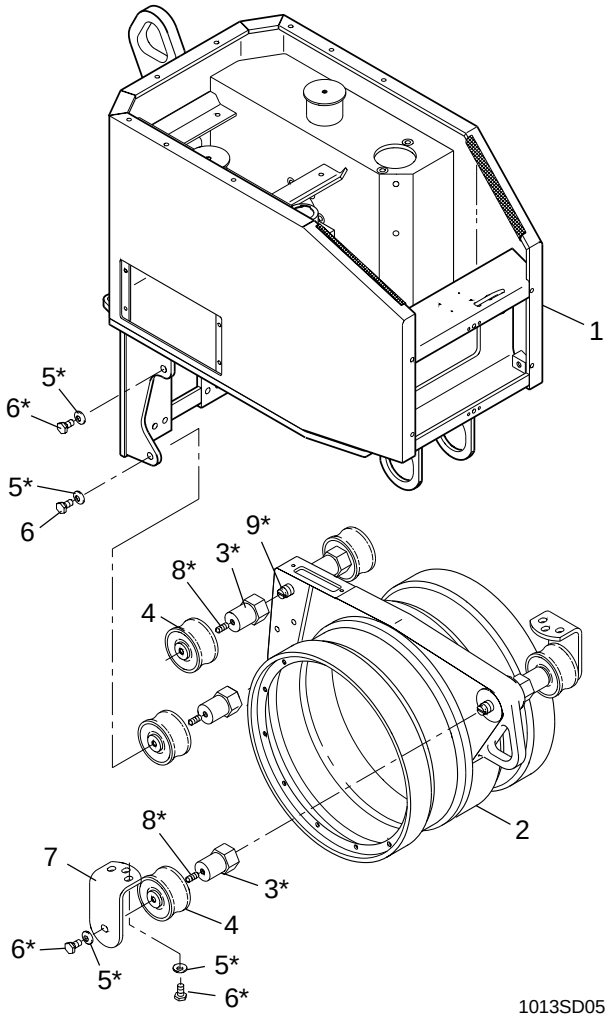

1013SD05

***Assembly Notes**

Ref.	Sealant Loctite (Omnifit)	Torque Ft.Lbs. (Nm)
3	242 (100)	---
5	242 (100)	63 (85)
6	242 (100)	36 (49)
8	242 (100)	---
9	242 (100)	---

Shockmount Components

REF.	DESCRIPTION	QTY.
1	FRAME-REAR	1
2	DRUM SUPPORT	1
3	SPACER	6
4	SHOCKMOUNT	6
5	WASHER-LOCK	24
6	SCREW (M12X25)	24
7	BRACKET-SHOCKMOUNT	4
8	SETSCREW (M12X30)	12
9	STUD-SHOCKMOUNT	6

6.2 Replacing Shockmounts

Each drum support is shockmounted to the machine frame at six places, two at the outer mount **(a)** and four at the inner mounts **(b)**.

Inspect shockmounts at regular intervals for damage and wear. Replace shockmounts that are torn or split. The shockmounts isolate and protect the frame and upper components from excessive vibration. Running the machine with damaged shockmounts can cause wiring connections to weaken and may eventually damage other components. When replacing shockmounts it is recommended that both the left and right sides be done at the same time.

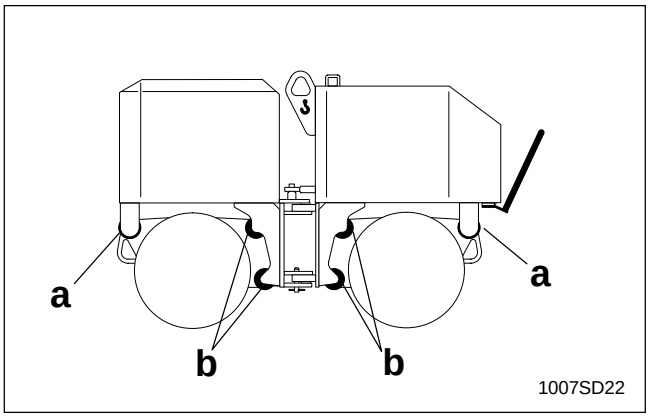

FIG. 6-1 SHOCKMOUNT LOCATIONS

Recommended Tools

Socket - 9/16", 13/16", 7/8", 15/16", 1-1/16"
Open End Wrench - 2"
Rubber Mallet , Torque Wrench
Loctite 242 (or Equivalent)
Channel lock pliers

Replacing Outer Shockmounts:

See Section 6.1 for installation drawing.

1. Remove the three M12 screws (6) holding the shockmount bracket (7) to the frame and remove bracket.

2. Grasp the shockmount with a large channel-lock pliers or a strap wrench and twist it until it breaks free from the spacer. Remove shockmount.

   If the shockmount is difficult to remove, remove spacer (3) with the shockmount attached. Use a two-inch open end wrench, with extension, to loosen spacer from the stud. If necessary, heat spacer using a small propane torch to break down threadlocking compound.

   To remove shockmount from spacer, place spacer in vise as shown in Fig. 6-3 and turn it free.

3. The shockmount studs (9) are slotted and can be removed using a large screwdriver **(c)**. Heat studs thoroughly to break down threadlocking sealant.

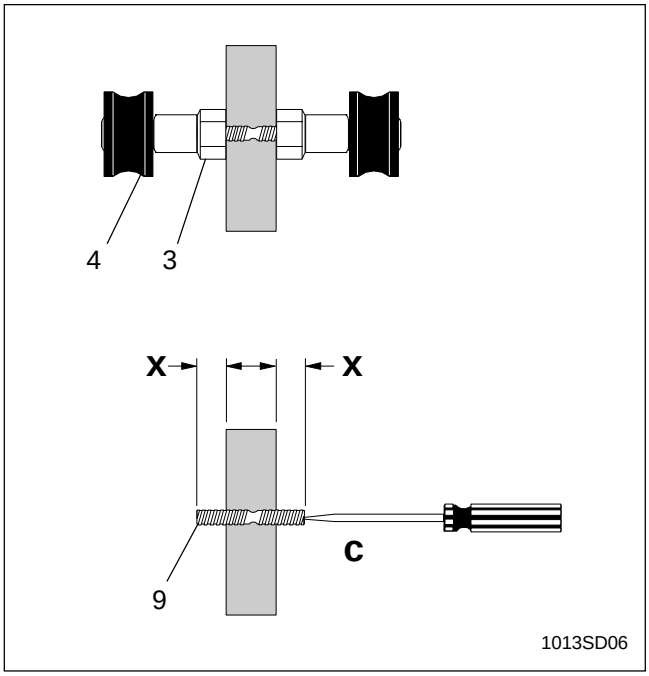

FIG. 6-2 REMOVING SHOCKMOUNT & STUD

When installing shockmounts, apply Loctite 242, or an equivalent threadlocking compound, to shockmount fasteners during assembly.

If replacing shockmount stud (9), apply Loctite 242, or an equivalent threadlocking compound, to threads on stud. Screw stud into frame until it protrudes equally on either side **(x)**.

Torque fasteners following assembly notes on page 6-1.

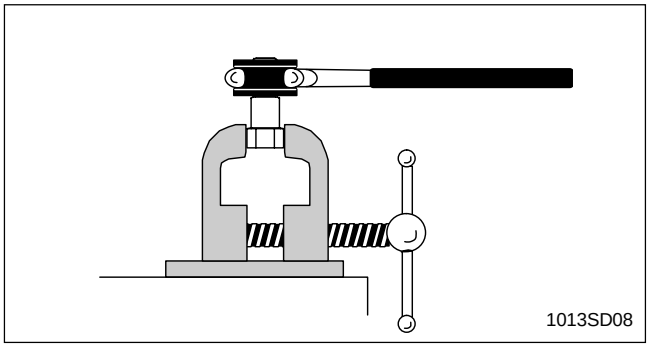

FIG. 6-3 USING VISE TO REMOVE SHOCKMOUNT

Replacing Inner Shockmounts:

See Section 6.1 installation drawing.

1. Lock articulated joint *(Section 1.5).*

2. Support machine with appropriate crane or hoist by the lifting eye **(e)**.

3. Loosen (do not remove) the M12 screws (6) holding outer shockmount **(g)** to the shockmount bracket.

4. Remove the M12 (6) screws holding the inner shockmounts **(f)** to the frame.

5. Slowly raise machine and allow drum support to pivot down as shown in illustration. Position machine and drum support as needed to access inner shockmounts and spacers.

   CAUTION: Avoid straining hydraulic hoses. Lift machine only high enough to remove shockmounts.

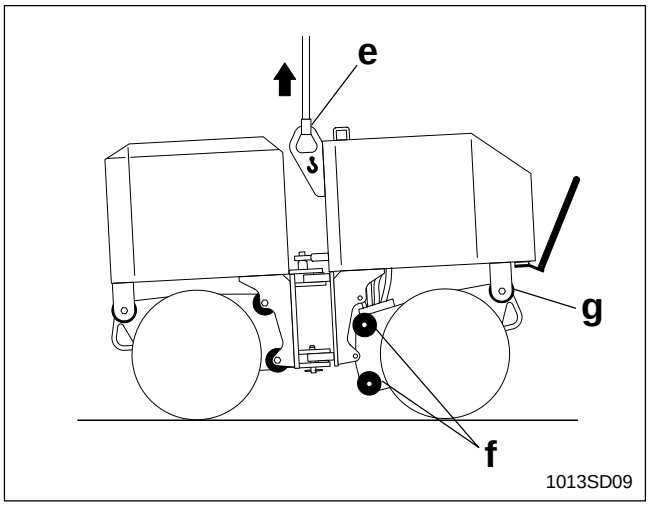

FIG. 6-4 REMOVING INNER SHOCKMOUNTS

Remove and install shockmounts and spacers in same manner as described on page 6-2, steps two and three.

After shockmounts have been installed:

1. Lower machine and position support drum to align shockmounts with holes in frame.

2. Mount washer (5) to M12 screw (6) and apply Loctite 242 to screw. Insert screw through frame and into shockmount. Torque screws to 36 ft.lbs. (49 Nm).

3. Tighten outer bracket.

6.3 Hydraulic Hose Clamps

***Assembly Notes**

Ref.	Sealant Loctite (Omnifit)
10	242 (100)
11	515 (10)
12	242 (100)
19	242 (100)

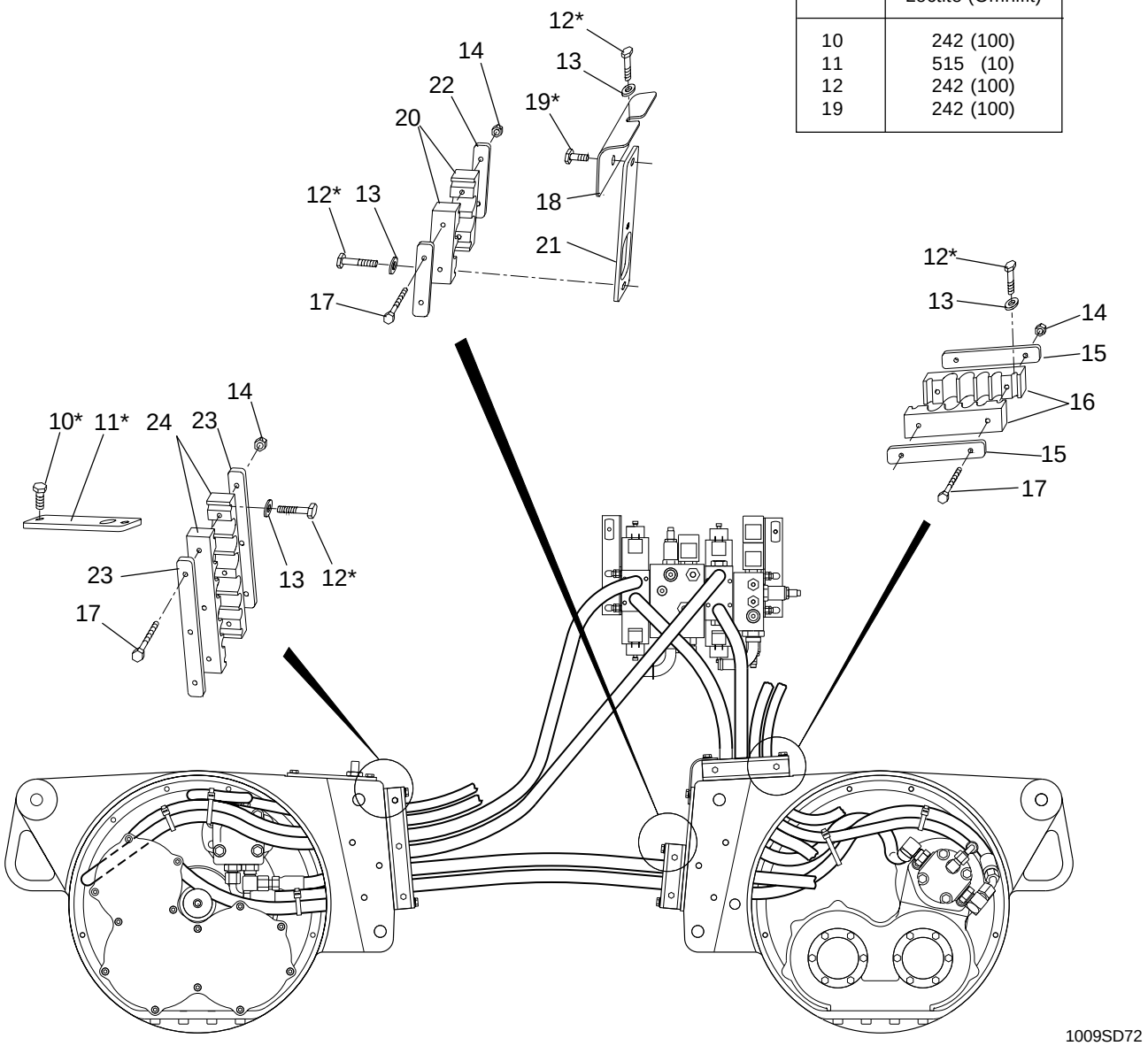

Hydraulic Hose Clamp Components

REF.	DESCRIPTION	QTY.
10	SCREW M8 X 202	2
11	PLATE, COVER	1
12	SCREW M8 X 60	6
13	WASHER	6
14	NUT-LOCK M6	7
15	PLATE-CLAMPING	2
16	CLAMP-HOSE	1
17	SCREW M6 X 50	7

REF.	DESCRIPTION	QTY.
18	GUARD, HOSE	1
19	SCREW M8 X 20	1
20	CLAMP-HOSE	1
21	ADAPTER-CLAMP	1
22	PLATE-CLAMPING	2
23	PLATE-CLAMPING	2
24	CLAMP-HOSE	1

6.4 Drum Supports

The drum supports contain both the exciter and drive assemblies, as well as all the connecting piping for the drive and exciter motors. Before removing the drum support it will be neccesary to first remove both the drum support cover and drivecase assembly to gain access to the hydraulic piping inside *(Sections 4.5 & 4.7).*

To ease installation of hydraulic hoses and fittings later on, make note of their orientation, placement and position. Cap and plug all open connections to prevent contamination from entering hydraulic system.

Recommended Tools

Socket - 10 mm, 13 mm, 9/16", 7/8", 15/16", 1-1/16"
Allen Wrench - 8 mm, 10 mm, 14 mm
Open End Wrench - 10 mm, 13 mm, 9/16", 13/16", 7/8", 15/16", 1-1/16"
Rubber Mallet
Torque Wrench
Loctite 242, 515, 545 (or Equivalents)
Channel Lock Pliers
Three M16 x 55 Screws

Removal:

See Section 6.3 for assembly drawing.

1. Lock articulated joint *(Section 1.5).*
2. Support machine by lifting eye, using an appropriate crane or hoist.
3. Remove drums from drum support *(Section 4.4).*
4. Remove drum support cover *(Section 4.5).* Disconnect hydraulic lines from drive motor and brake assembly if applicable. Cap or plug open connections.
5. Remove drivecase assembly *(Section 4.7)*. Disconnect hydraulic hoses **(a)** from exciter motor and cap or plug open hoses and fittings.
6. Remove the screws holding the shockmounts to the frame.
7. Remove the two M8 screws (12) holding the hose clamps (16) to the drum support.
8. Remove hose guard (18) from drum support.
9. Loosen slightly, but **do not** remove, the two M16 screws (8) which hold the rear hose clamps (15) together. This will allow hoses to slide easily through clamps and act as a guide when pulling them out of the drum support. Repeat for front drum clamps (24).
10. Slowly, raise machine and carefully guide hydraulic hoses out of the drum support.

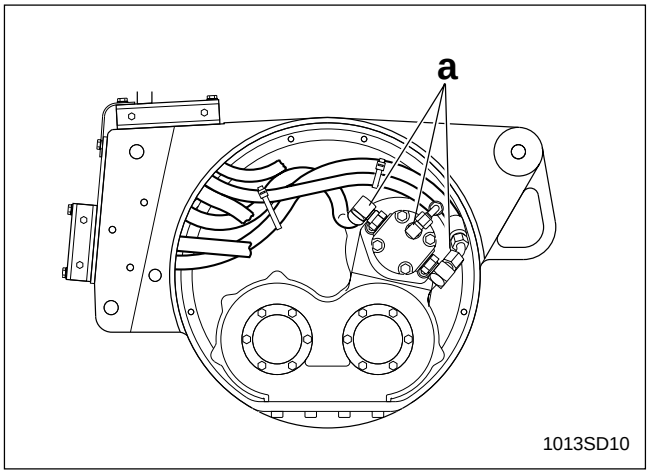

FIG. 6-5 DISCONNECTING HOSE LINES

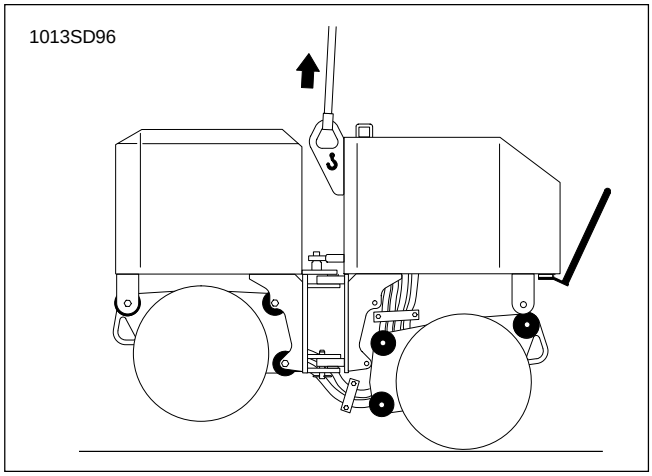

FIG. 6-6 LIFTING MACHINE CLEAR OF SUPPORT

Drum Supports, Cont'd

Installation:

See Section 6.3 for assembly drawing.

1. Install shockmounts on drum support *(Section 6.2).*

2. Place drum support under raised machine. Insert hydraulic lines through openings and lower machine over drum support.

3. Secure machine frame to shockmounts.

4. Apply Loctite 545 hydraulic sealant, or equivalent, to fittings on exciter drive motor and attach hydraulic hoses.

5. Install drive housing assembly and connect hydraulic lines to drive motor *(Section 4.7).*

6. With all hydraulic hoses connected, tighten hose clamps (15, 24) around hoses. Install hose clamps to drum supports and attach hose guard (18). Secure all fasteners using Loctite 242 , or equivalent.

7. Install drum support cover and drums *(Sections 4.4 & 4.5).*

6.5 Articulated Joint & Steering Cylinder - Exploded View

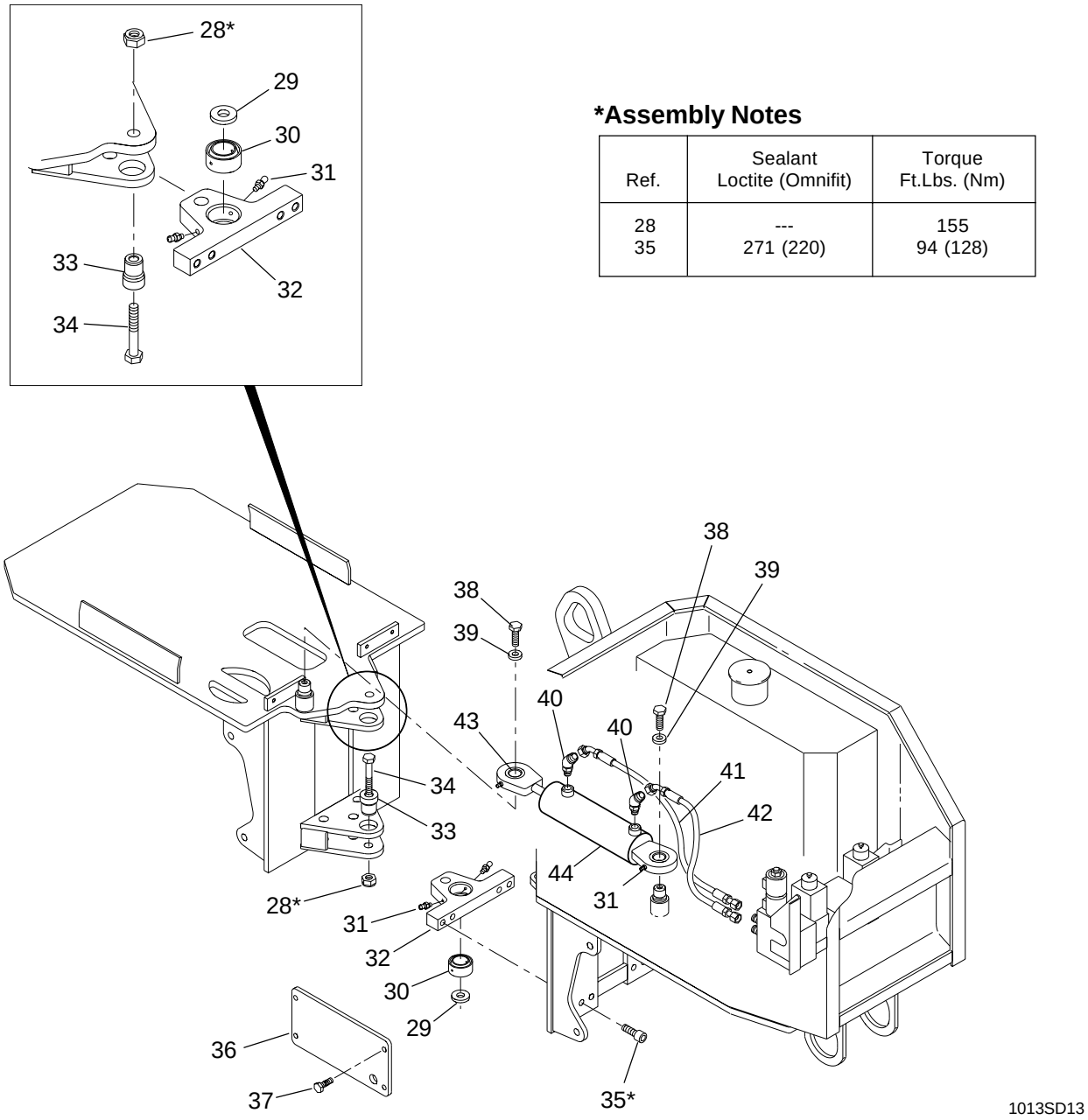

***Assembly Notes**

Ref.	Sealant Loctite (Omnifit)	Torque Ft.Lbs. (Nm)
28	---	155
35	271 (220)	94 (128)

Joint & Steering Components

REF.	DESCRIPTION	QTY.
28	NUT-LOCK (M16)	2
29	WASHER	2
30	BEARING-BALL	2
31	FITTING-GREASE	6
32	BRACKET-PIVOT	2
33	PIN-PIVOT	2
34	SCREW (M16X90)	2
35	SCREW (M12X40)	8
36	ACCESS COVER	1
37	SCREW (M8 X 16)	4

REF.	DESCRIPTION	QTY.
38	SCREW (M12X20)	2
39	WASHER	2
40	FITTING-HYD.	2
	O-RING	2
	O-RING	2
41	HOSE ASSY.	1
42	HOSE ASSY	1
43	BEARING	2
44	CYLINDER-HYD.	1

6.6 Articulated Joint

Recommended Tools

Socket - 13 mm, 19 mm, 24 mm
Allen Wrench - 14 mm
Open End Wrench - 24 mm, 9/16", 13/16", 7/8", 15/16", 1-1/16"
Torque Wrench
Loctite 242, 271, 545 (or Equivalents)
Arbor Press
Propane Torch
Grease - Shell Alvania No. 2

Removal:

See Section 6.5 for assembly drawing.

1. Remove scraper bars from both right and left sides of the rear half of machine.

2. Start machine and position machine as if turning left **(a)**. This will help gain access to articulated joint at point **(b)**. Once in this position, turn machine off.

3. For added accessibility, remove drums from both sides of the rear half of machine *(Section 4.4).*

4. Support each drum, both front and rear, with screw jacks **(c)** or blocking.

5. Heat the M12 screws (35) holding pivot brackets (32), using a small propane torch to break down the threadlocking compound. Remove screws and bracket.

6. Remove M16 screw (34) from top and bottom joint.

7. Tap out pivot pin (33) from bracket portion of machine frame.

   Note: *Pivot pin is removed from top to bottom on uppermost bracket and from bottom to top on lower bracket.*

8. Slide pivot bracket (32) and washer (29) out of machine frame.

9. After pivot bracket is off, place pivot pin (33) back into it as shown. Use an arbor or hydraulic press to push against pin **(d)** and press bearing (30) out of bracket.

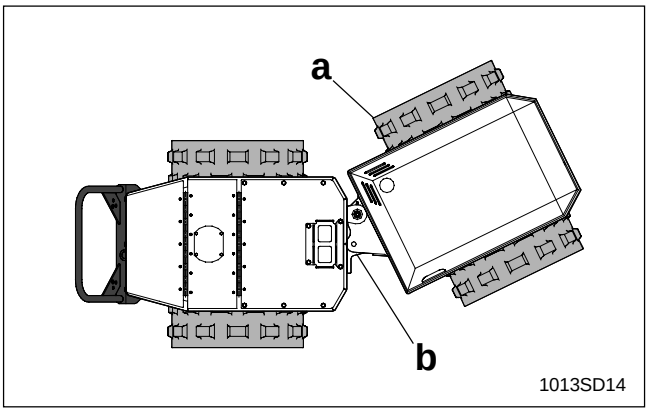

FIG. 6-7 ACCESSING PIVOT BLOCK

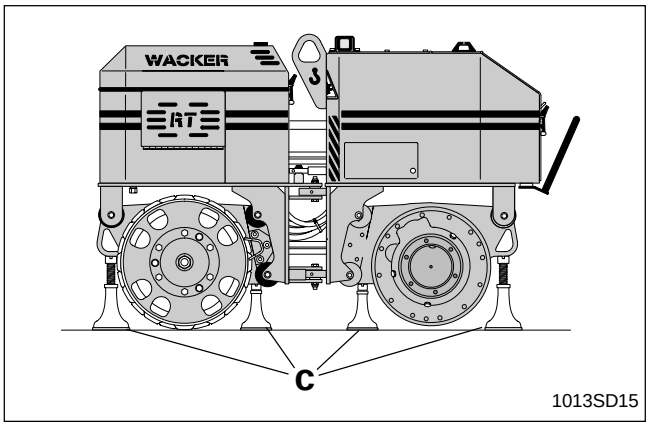

FIG. 6-8 SUPPORTING FRONT AND REAR MACHINE HALVES

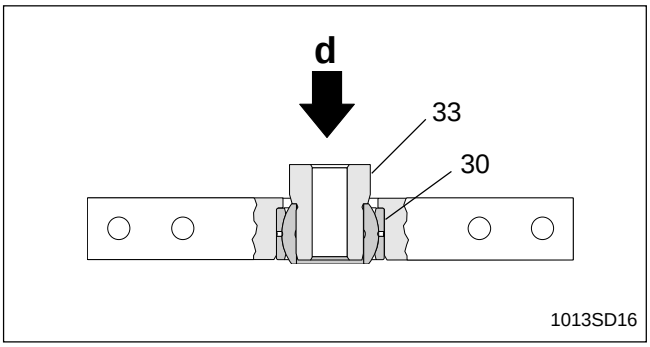

FIG. 6-9 PRESSING OUT BEARING

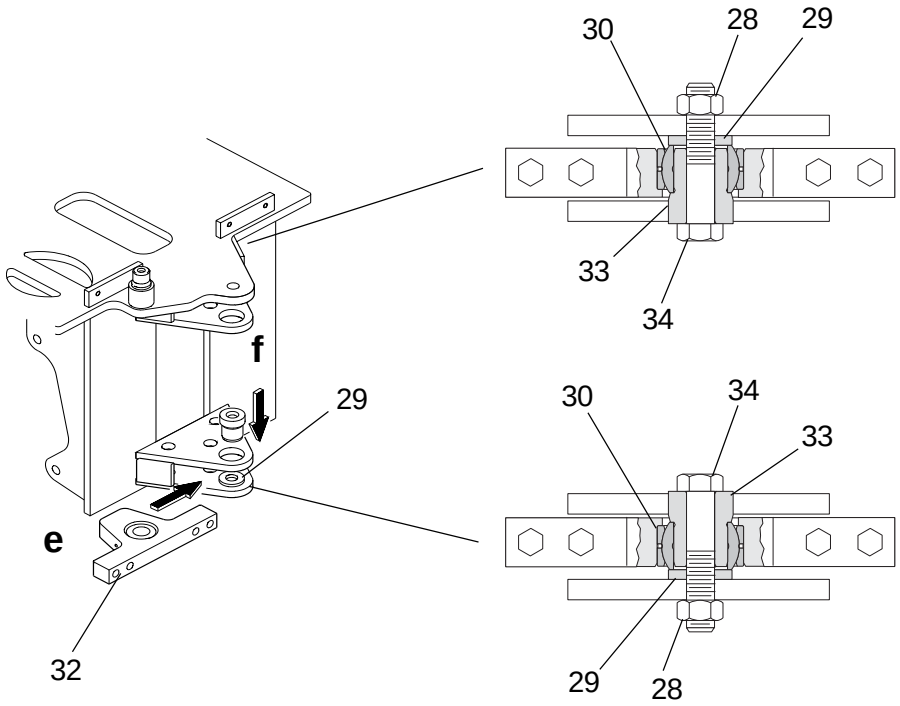

FIG. 6-11 INSTALLING PIVOT BLOCKS

Assembly:

1. To prevent rust, repaint any areas of the pivot bracket damaged by heating during disassembly.

2. Press bearings (30) into pivot brackets (32).

3. Place washer (29) into machine frame.

4. Slide **(e)** pivot bracket (32) over washer and into machine frame.

5. Tap pivot pin **(f)** into bracket portion of machine frame and through pivot bracket.

   Note: *Pivot pin is installed from bottom to top on uppermost bracket and from top to bottom on lower bracket.*

6. Install M16 x 90 screw (34) and secure with locknut (28). Torque to 155 ft. lbs. (210 Nm).

7. Secure pivot bracket to rear half of machine frame with M12 x 40 screws (35). Use Loctite 271, or an equivalent high strength threadlocking compound, on screws and torque screws to 94 ft. lbs. (128 Nm).

8. Attach drums and scraper bars (Section 4.4).

9. Grease bearing with Shell Alvania #2 grease.

6.7 Steering Cylinder

See Section 6.5 for assembly drawing.

Removal:

1. Loosen M8 screws (36) holding the cylinder access cover to the machine. Remove screws and cover.

2. Disconnect hoses (41, 42) from cylinder. Cap hoses and fittings.

3. Loosen and remove two M12 screws (38) holding cylinder to frame.

4. Pull steering cylinder from rear frame.

Installation:

1. Position steering cylinder inside rear frame and secure with M12 screw (38) and washer (39).

2. With machine positioned with front in-line with rear, secure ram end of steering cylinder to front frame with M12 screw (38) and washer (39).

3. Apply Loctite 545, or equivalent hydraulic sealant, to fittings and attach hoses to steering cylinder.

4. Attach steering cylinder access cover.

UNIT 7

POWER TAKE-OFF

7.1 Drive Pump & Coupling - Exploded View 7-2
7.2 Pump & Coupling Installation 7-3
7.3 General Description 7-4
7.4 Engine 7-4

7.1 Drive Pump & Coupling - Exploded View

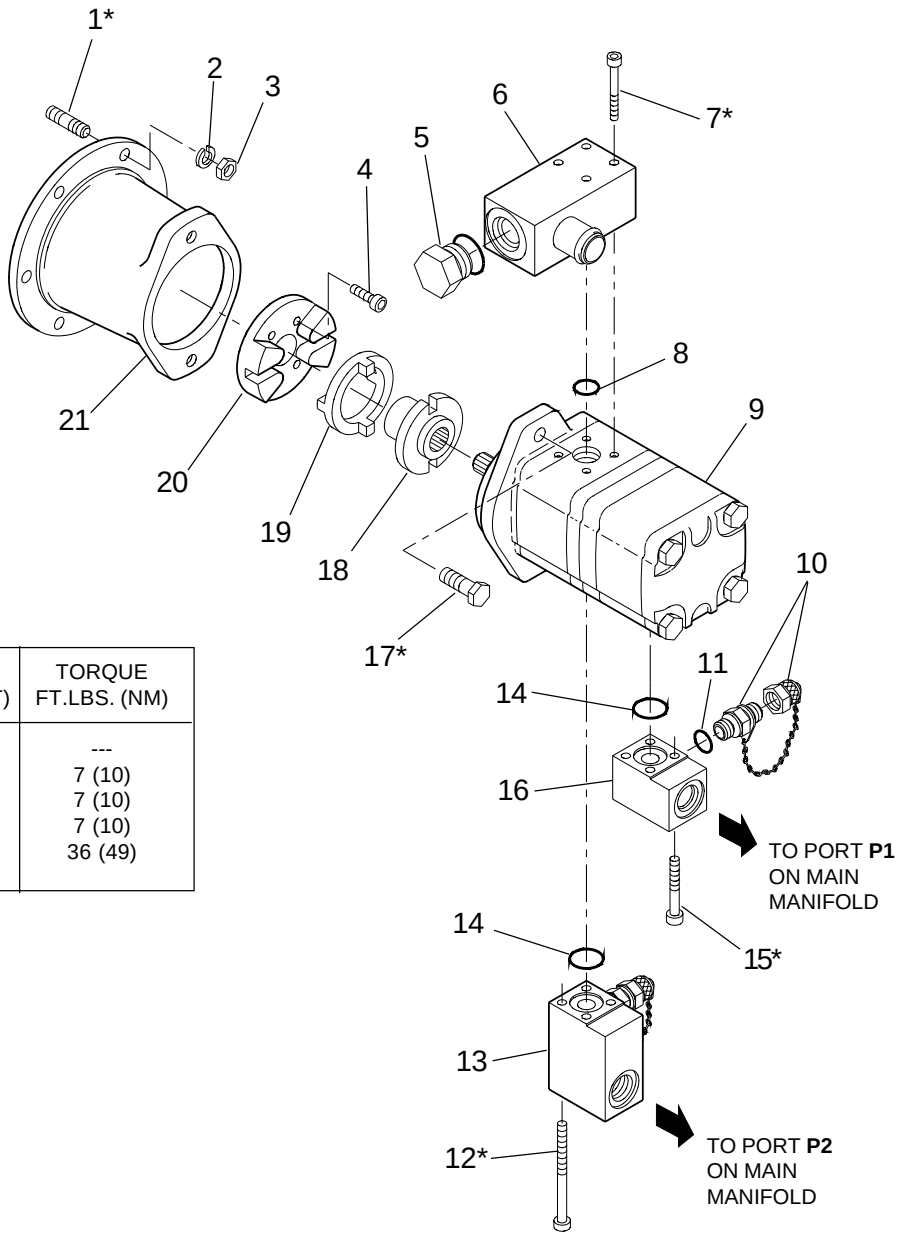

***Assembly Notes**

REF.	SEALANT LOCTITE (OMNIFIT)	TORQUE FT.LBS. (NM)
1	242 (100)	---
7	271 (220)	7 (10)
12	271 (220)	7 (10)
15	271 (220)	7 (10)
17	271 (220)	36 (49)

REF.	DESCRIPTION	QTY.
1	STUD	6
2	WASHER-LOCK	6
3	NUT (M8)	6
4	BOLT	6
5	PLUG	1
6	MANIFOLD-SUCTION	1
7	SCREW (M6X50)	4
8	O-RING	1
9	PUMP-HYDRAULIC	1
10	FITTING-ADAPTER	2
11	O-RING	2

REF.	DESCRIPTION	QTY.
12	SCREW (M6X80)	4
13	BLOCK-HYDRAULIC	1
14	O-RING	2
15	SCREW (M6X40)	4
16	BLOCK-HYDRAULIC	1
17	SCREW (M10X30)	4
18	ADAPTER-PUMP	1
19	ADAPTER-INTERNAL	1
20	ADAPTER-ENGINE	1
21	SUPPORT-PUMP	1

1013SD19

7.2 Pump & Coupling Installation

Recommended Tools:

Socket - 17 mm
Allen Wrench - 6 mm, 8 mm, 10 mm, 14 mm
Open End Wrench - 7/8", 13/16", 7/8", 17 mm
Torque Wrench
Loctite 242, 271 (or Equivalents)
Screw Driver
3/16" Hose Clamp
Grease - Shell Alvania #2 (or Equivalent)

Removing Pump & Coupling:

1. Loosen hose clamp **(a)** and disconnect suction hose **(b)** from drive pump (9).
2. Disconnect and cap hydraulic hoses **(c)**.
3. Remove hydraulic blocks (6,13) from pump to provide clearance for mounting screws.
4. Heat the two M10 screws (17), securing the drive pump, to break down the threadlocking compound. Remove pump.
5. Slide pump adapter couplings (18, 19) off pump.
6. Remove pump support (21) and adapter (20) from engine.

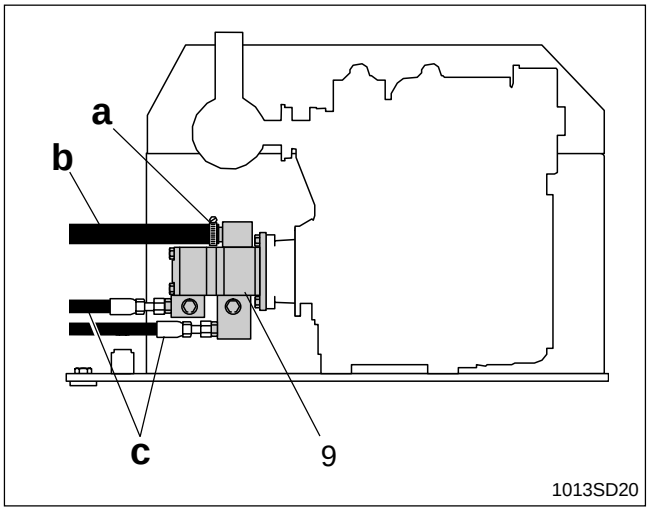

FIG. 7-1 DRIVE PUMP & HOSES

Installing Pump & Coupling:

1. Grease adapter couplings (18, 19) with Shell Alvania #2 and install them on pump. Pump adapter (18) must be installed with short end facing toward pump as shown.
2. Fasten adapter (20) to engine and install pump support (21).
3. Mount drive pump (9) to pump support. Secure mounting screws (17) with Loctite 271, or equivalent high strength threadlocker, and torque screws to 36 ft.lbs. (49 Nm).

   Note: *Make sure tangs **(e)** on internal adapter (19) fit into slots in engine adapter (20).*
4. Attach blocks (6, 13) to pump. Secure screws using Loctite 271, or equivalent, and torque to 7 ft.lbs. (10 Nm).

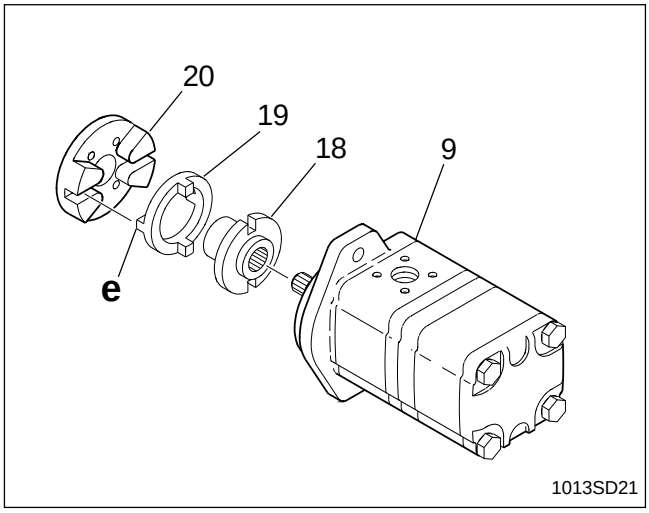

FIG. 7-2 PUMP COUPLING

5. Apply hydraulic sealant to fittings and attach hydraulic hoses.

7.3 General Description

All machines are equipped with a two cylinder Lombardini diesel engine. Early units used a 16 Hp (12 kW) engine - model 12LD435-2, later units a 20 Hp (16 kW) engine - model 12LD475-2.

Engine model 12LD475-2 uses a larger piston and alternator. While machine performance remains the same between engine models, the larger 12LD475-2 engine provides slightly more reserve power.

Engine model 12LD475-2 is interchangeable with 12LD435-2. When servicing the engine or replacing parts, refer to the engine identification plate located on the fan shroud for the serial number and model number of the engine.

Beginning with machines **S/N 7100 00000 & above**, both the air cleaner and exhaust systems were redesigned, changing from a horizontal to a vertical design. The vertical air cleaner system **(a)** offers additional filtering capabilty and is designed to reduce filter changes in dusty conditions. For machines using the older horizontal air cleaner system, an optional heavy duty filter kit can be installed to extend filter life in dusty conditions.

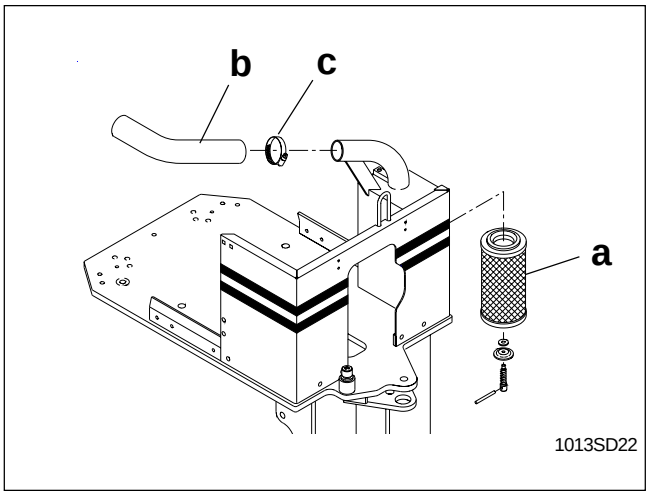

FIG. 7-3 VERTICAL AIR CLEANER SYSTEM

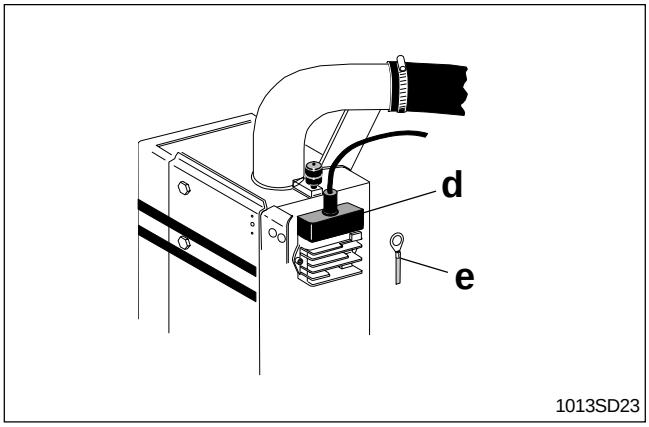

FIG. 7-4A REMOVING VOLTAGE REGULATOR

7.4 Engine

Removal:

The following procedure describes removal of the engine on machines **S/N 7100 00000 & above**, using the vertical air cleaner system. These machines are also equipped with an oil cooler. For machines with serial numbers below this, the replacement of the engine will differ slightly.

1. Loosen clamp **(c)** from air cleaner hose **(b)** and pull hose from mounting tube on frame.

2. Check mounting location of the voltage regulator. The regulator will be mounted either on the engine or to the air cleaner housing as shown **(d)**. If the regulator is mounted on the air cleaner housing remove it along with the ground cable **(e)**.

3. Remove the M8 screws **(f)** and remove entire engine cover **(g)** from machine frame.

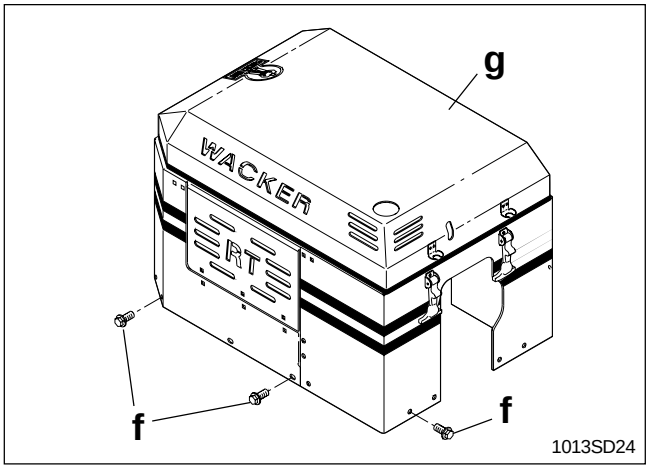

FIG. 7-4B REMOVING ENGINE COVER

Engine Removal, Cont'd

4. Loosen screws holding throttle cable retainers **(j)** and pull retainers off cable.

5. Remove nut **(h)** holding throttle cable **(i)** to engine mounting bracket. Pull cable out through bracket.

6. Disconnect hydraulic hoses from drive pump. Cap or plug all open connections.

7. Unplug wire harness **(p)**.

8. Disconnect battery ground wire **(o)** from engine block.

9. Disconnect positive battery cable **(n)** from starter motor.

10. On machines equipped with an oil cooler, remove screws holding radiator. Keep hydaulic hoses connected and place radiator assembly aside and clear from engine.

11. Disconnect fuel pressure line **(l)** from fuel solenoid and cap hose.

12. Disconnect fuel return line by cutting hose **(s)** as close to crimped clamp **(r)** as possible. Use a side cutter or other appropriate tool to remove crimped clamp from barbed nipple **(q)** on engine.

13. Remove the four M16 screws **(m)** securing engine to machine frame.

14. Use an appropriate hoist and sling to lift engine up and off machine frame.

15. Remove drive pump, couplings and support from engine *(Section 7.2).*

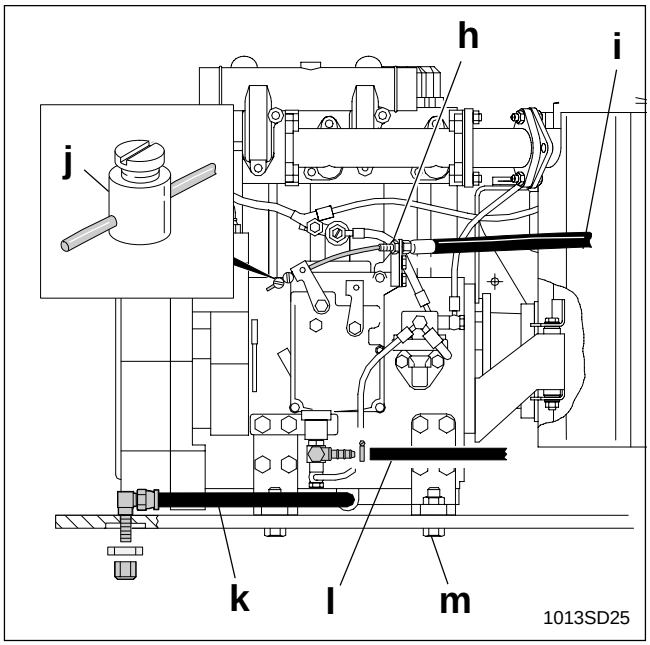

FIG. 7-5 THROTTLE CABLE & ENGINE MOUNTING SCREWS

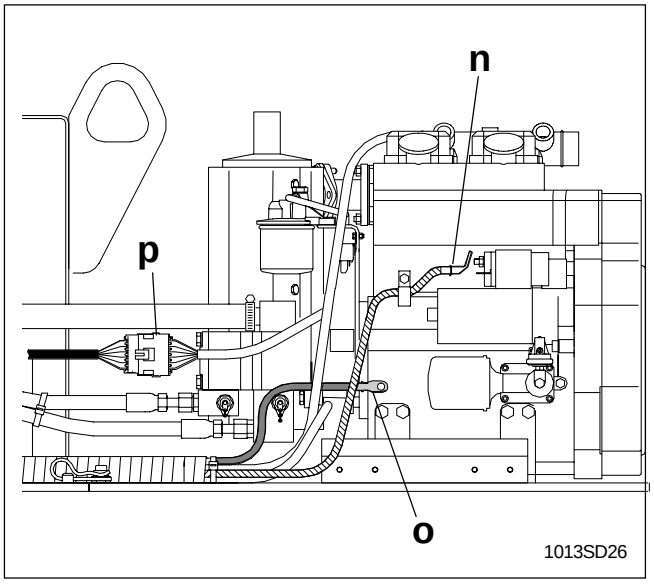

FIG. 7-6 DISCONNECTING ENGINE WIRING

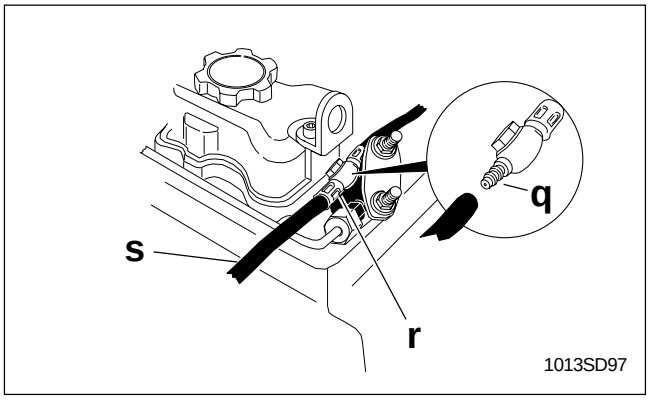

FIG. 7-7 FUEL RETURN LINE

Installation:

Replacement engines come equipped with a new voltage regulator and pump coupling. They do not include the exhaust system, wiring harness or engine relays. Remove these items from existing engine assembly for use on new engine.

1. If new engine comes equipped with a wiring harness, this harness should be removed.

2. Fasten engine restart module **(a)**, glow plug relay **(b)** and starter relay **(c)** on mounting plate and install assembly to engine.

3. Remove end cover from exhaust manifold and install exhaust system.

4. The engine comes supplied with one of two voltage regulators **(d** or **e)**. See *Figure 7-9.* Spade connections are different between regulators.

   If the wiring harness from the old engine is being used on the new engine, check that the spade connections on new regulator fit connector on harness. If they don't, pull wires from connector and install them in the new connector supplied with the regulator. It will be necessary to remove some of the existing terminals from the wires and crimp on ones that will connect to the regulator.

   To install a new engine harness, crimp terminals on the three open wires for the voltage regulator. Also slide rubber boot for oil pressure switch over white wire and crimp terminal on.

   Connect harness following diagram in Fig. 7-9.

5. Install engine assembly on frame.

6. Install throttle cable. Make sure cable is pushed all the way in at handle . Insert cable through bracket and secure with nut. Adjust retainers on cable end so machine runs at specified RPM at full throttle control. See section 2.1 engine specification table.

7. Attach low pressure fuel hose to hose fitting on injector using a hose clamp.

8. Install pump coupling and pump *(Section 7.2).*

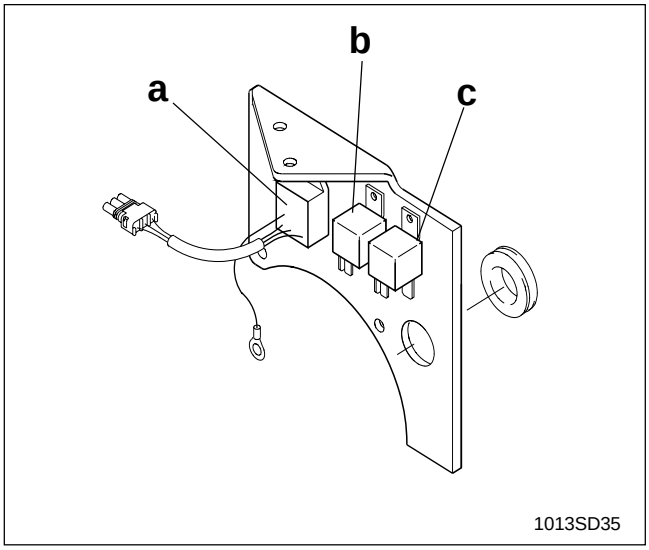

FIG. 7-8 ENGINE RELAYS

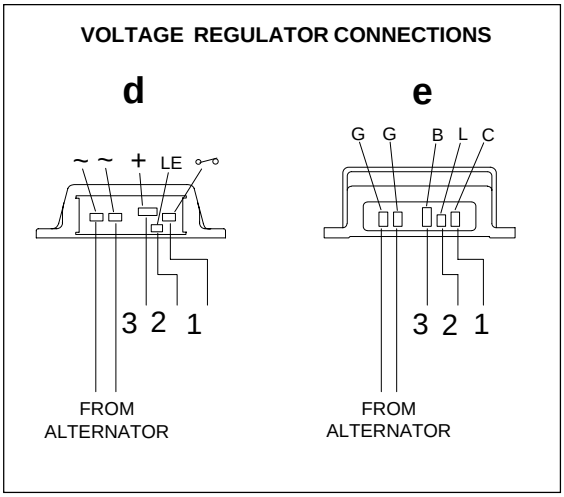

REF.	CONNECTION	COLOR
1	VOLTAGE REGULATOR	WHITE
2	VOLTAGE REGULATOR	GREEN/WHITE
3	VOLTAGE REGULATOR	RED
4	STARTER MOTOR	BLACK
5	STARTER RELAY	--
6	STARTER MOTOR	RED
7	LOWER FUEL SOLENOID	TAN
8	OIL PRESSURE SWITCH	WHITE
9	UPPER FUEL SOLENOID	TAN
10	ANTI-RESTART MODULE	--
11	MAIN WIRING HARNESS	--
12	GLOW PLUG	PINK
13	GROUND	BROWN
14	GLOW PLUG RELAY	--

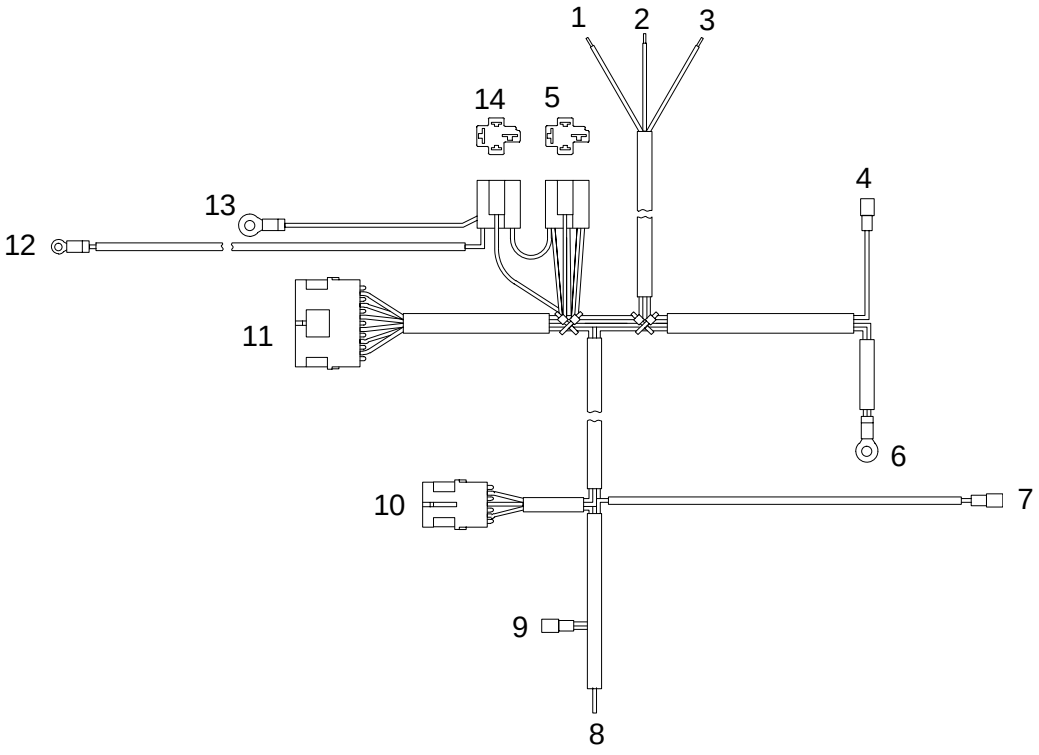

1013SD36

FIG. 7-9 WIRING HARNESS - S/N 7100 00000 & ABOVE

NOTES

UNIT 8

Electrical System

8.1 Introduction 8-1
8.2 Troubleshooting 8-1
8.3 Cord Operated System (S/N 6800 00000 & Below) 8-2
8.4 Infra-red Operated System (S/N 6800 00000 & Below) 8-3
8.5 Infra-red & Cord Operated System (S/N 7100 00000 & Above) 8-4

Wiring Schematics - S/N 6800 00000 & Below
8.6 Cord Operated Control Box 8-5
8.7 Infra-red Transmitter 8-6
8.8 Cord Operated System 8-7
8.9 Infra-red & Cord Operated System 8-8

Wiring Schematics - S/N 7100 00000 & Above
8.10 Cord Operated Control Box 8-9
8.11 Infra-red Transmitter 8-10
8.12 Machine Wiring 8-11
8.13 Engine Wiring 8-12

8.1 Introduction

This unit provides a basic overview of the electrical systems used on the RT Rollers and does not offer detailed troubleshooting procedures. Schematics and wiring diagrams are included in this unit for individuals already familiar with the operation of the electrical system and its components. Three basic electrical systems are in use and differ somewhat in their method of operation and components used. They are described in *Sections 8.3, 8.4 & 8.5*.

Two systems utilize digital electronics to receive and interpret signals from the operator's control box and transmitter. The third system uses conventional DC circuitry.

When troubleshooting the electrical system check for the most common causes of problems first, which include:

1. Loose or broken connections.
2. Low battery charge.
3. Water damage or excessive moisture.
4. Poor ground connection.
5. Faulty switches and solenoids.
6. Wrong channel selected.

8.2 Troubleshooting

For machines S/N 6800 00000 & below refer to WACKER manual:

Electrical Systems Troubleshooting - P/N 83294

This manual identifies the location and function of all electrical system components. It provides detailed troubleshooting procedures for both the cord operated and infra-red operated systems used on these machines.

For machines S/N 7100 00000 & above consult WACKER Corporation Service Department for assistance.

8.3 Cord Operated System

(S/N 6800 00000 & Below)

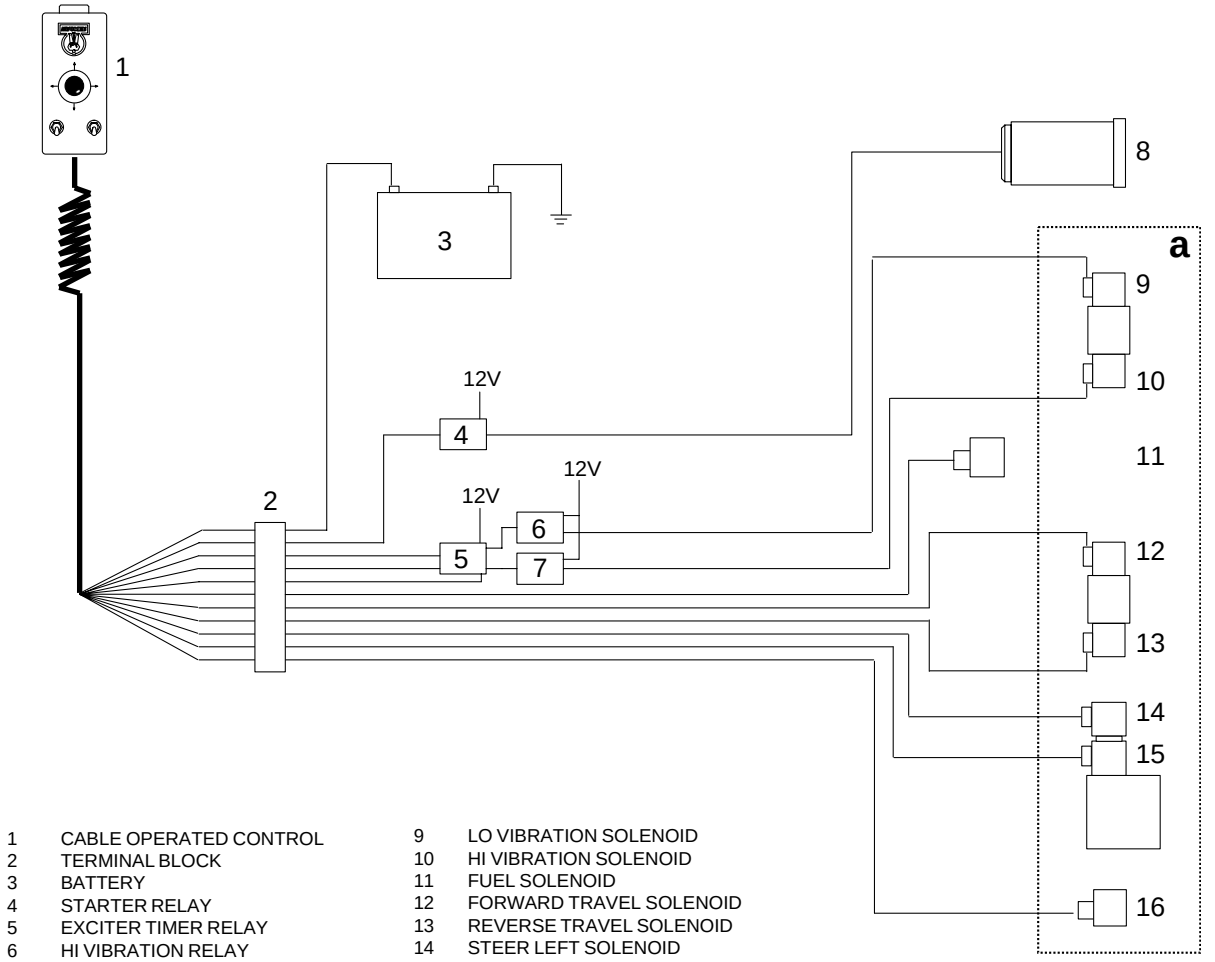

1 CABLE OPERATED CONTROL
2 TERMINAL BLOCK
3 BATTERY
4 STARTER RELAY
5 EXCITER TIMER RELAY
6 HI VIBRATION RELAY
7 LO VIBRATION RELAY
8 STARTER
9 LO VIBRATION SOLENOID
10 HI VIBRATION SOLENOID
11 FUEL SOLENOID
12 FORWARD TRAVEL SOLENOID
13 REVERSE TRAVEL SOLENOID
14 STEER LEFT SOLENOID
15 STEER RIGHT SOLENOID
16 HIGH SPEED TRAVEL SOLENOID

Description

The diagram above shows the basic operating system for units with **S/N 6800 00000 and below**. The system shown is for units equipped only with the standard cord operated controls.

The switches on the control box (1) receive power through the power cord from the 12V battery on the machine. The other side of each switch is wired back through the cord to a terminal block (2) located on the machine. When a switch on the control box is operated, power from the battery flows though it and back to a specific connection on the terminal block. The terminal block then directs the signal to the coresponding solenoid on the valve block **(a)**.

Four relays are included in this system. They control the starter and exciter circuits.

The timer relay (5) in the exciter circuit briefly interrupts the vibration signal from the terminal block. This opens the vibration solenoids (9, 10) allowing the exciter to shift into neutral. After a 10 second delay the timer relay closes and signals one of the vibration relays. The vibration relays (6, 7) receive power from the battery. When the timing relay closes, 12V from the battery is directed though the relays and to the vibration solenoids.

A starter relay (4) is used to operate the starter motor (8) on the engine. When the key switch on the control box (1) is turned to "Start", the relay closes and allows 12V from the battery to flow through to the starter motor.

8.4 Infra-red Operated System

(S/N 6800 00000 & Below)

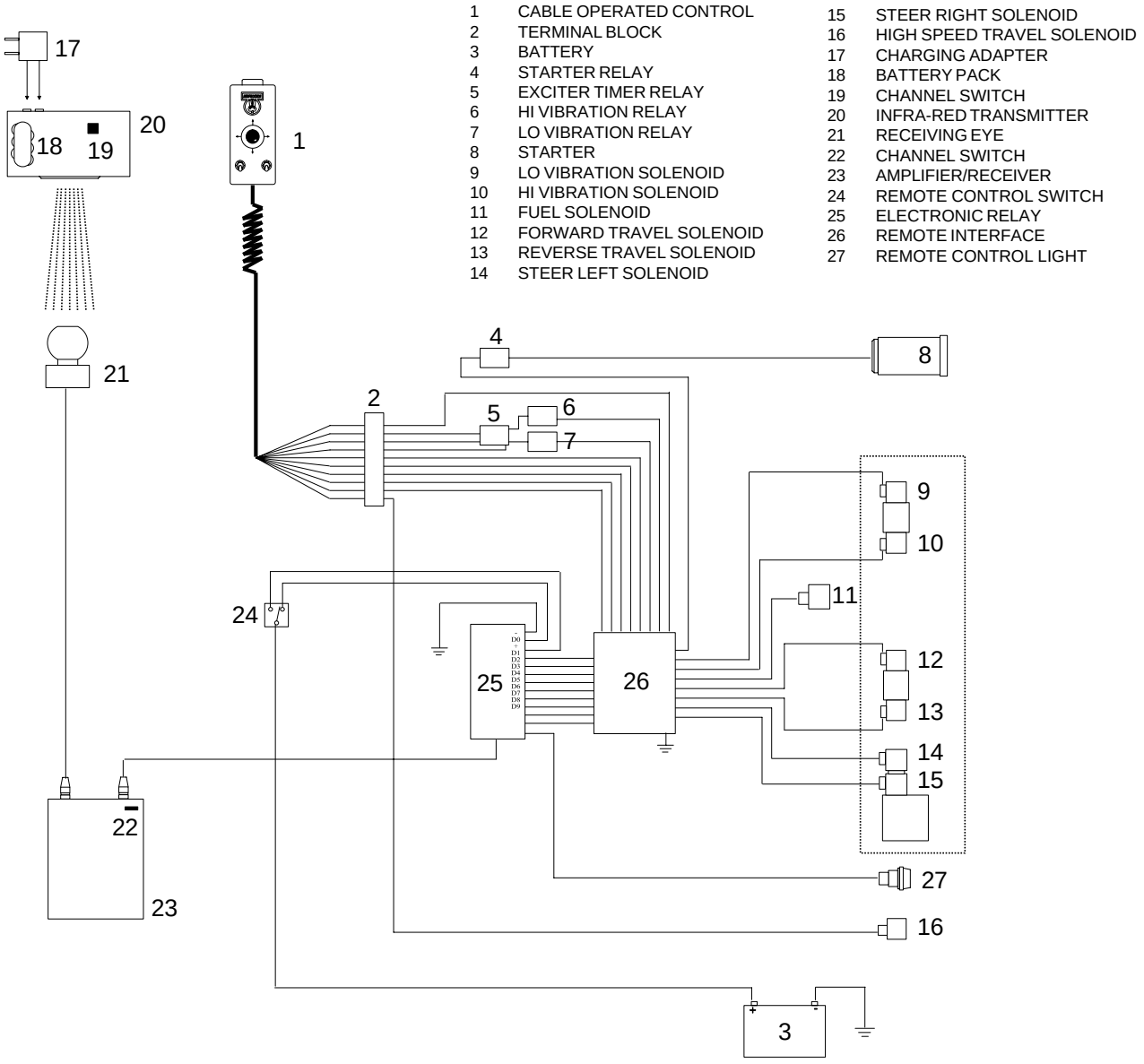

1013SD38

Description

The addition of the optional infra-red operating system to the standard cord operated system on machines **S/N 6800 00000 & below** allows machines to operate through either the cord connected control box or the infra-red transmitter. A control switch (24) allows the operator to select between either system.

Basic operation remains the same as the cord control system described on the previous page except for the addition of the infra-red interface (26) and other infra-red system components.

In the infra-red system a transmitter (20) is used to send infra-red signals to a receiving eye (21) on the machine. The receiving eye transforms the signal to a digital code which is then sent to the receiver module (23). The receiver amplifies and decodes the signal sending it to an electronic relay (25) which is connected to the machine battery. If the receiver signals the relay to close, power from the battery is directed to the corresponding output and to the remote interface (26) where it is directed to the solenoids. The timer (5) and vibration relays (6, 7) are not used when operating the infra-red control system. The timing circuit is integrated with the electronic relay.

The remote interface (26) acts as a junction box for both the cable operated and infra-red systems.

8.5 Infra-red & Cord Operated System
(S/N 7100 00000 & Above)

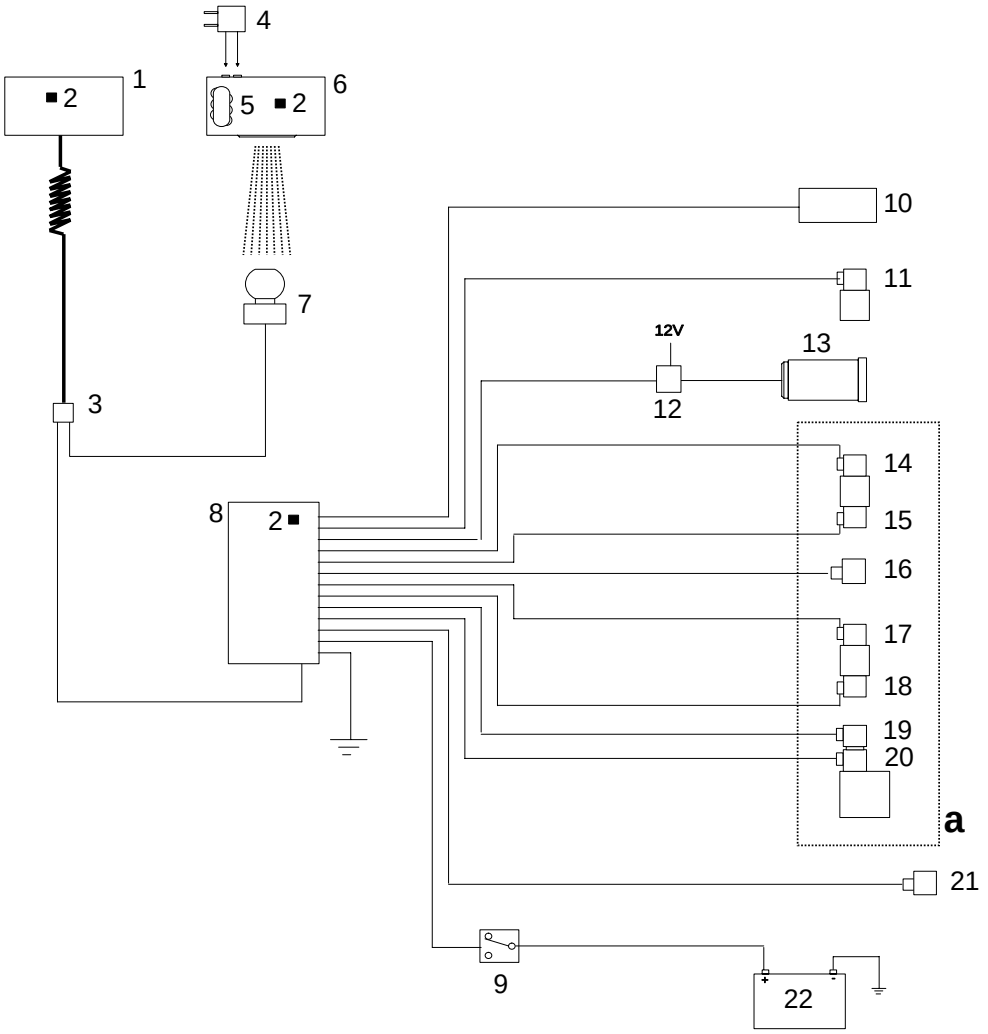

1 CABLE OPERATED CONTROL
2 CHANNEL SWITCH
3 CONNECTOR
4 CHARGING ADAPTER
5 BATTERY PACK
6 INFRA-RED TRANSMITTER
7 RECEIVING EYE
8 ELECTRONIC CONTROL MODULE
9 SYSTEM ON SWITCH
10 INDICATOR LIGHT
11 BRAKE SOLENOID
12 STARTER RELAY
13 STARTER
14 LO VIBRATION SOLENOID
15 HI VIBRATION SOLENOID
16 HIGH SPEEDSOLENOID
17 FORWARD TRAVEL SOLENOID
18 REVERSE TRAVEL SOLENOID
19 STEER LEFT SOLENOID
20 STEER RIGHT SOLENOID
21 FUEL SOLENOID
22 BATTERY

1013SD39

Description

The electrical system used on machines **S/N 7100 00000 & above** uses a common electronic control module (8) for both the cord and infra-red operating systems.This differs from the two previous versions *(Sections 8.3 & 8.4)* which used electronic modules for only the infra-red system. Because of this common electronic interface the infra-red interface used on earlier machines *(Section 8.4)* is no longer used.

The electronic control module combines the functions of the amplifier/receiver and relay modules used on the earlier systems. A "system on" switch (9) supplies power from the machine battery (22) to the module (8). The module then transmits power to both the cable operated control box (1) and the receiving eye (7). The infra-red transmitter is powered by a rechargeable ni-cad battery (5).

Both the cable operated and infra-red operated systems plug in to a common connector and transmit a digitally coded signal to the electronic control module (8). The module amplifies and decodes the signal and supplies 12V to the corresponding solenoids on the valve block **(a)**.

The 10 second time delay, when switching vibration modes, is built in as part of the control module. As a result, the timer and vibration relays used on the previous electrical systems are no longer required.

A starter relay (12) is used to operate the starter motor. The starter relay opens or closes in response to the signal from the electronic control module.

8.6 Schematic - Cord Operated Control Box
(S/N 6800 00000 & Below)

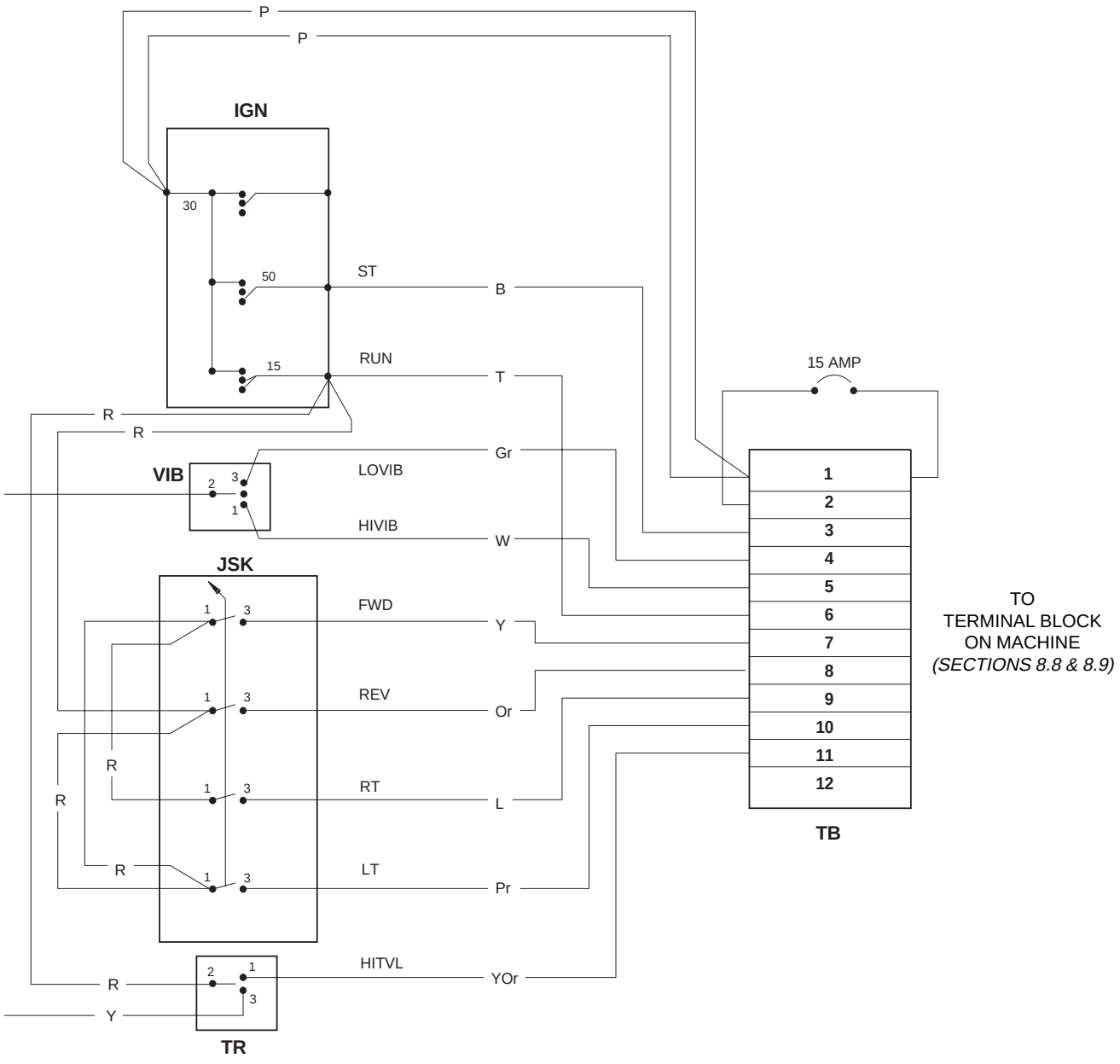

1002SD57

IGN Ignition Switch
JSK Joystick
TB Terminal Block
VIB Vibration Switch
TR Travel Switch

Wire Colors

B - Black	W- White
G - Green	Y - Yellow
L - Blue	Br - Brown
P - Pink	Gr - Gray
R - Red	Or - Orange
T - Tan	Pr - Purple

8.7 Schematic - Infra-red Transmitter

(S/N 6800 00000 & Below)

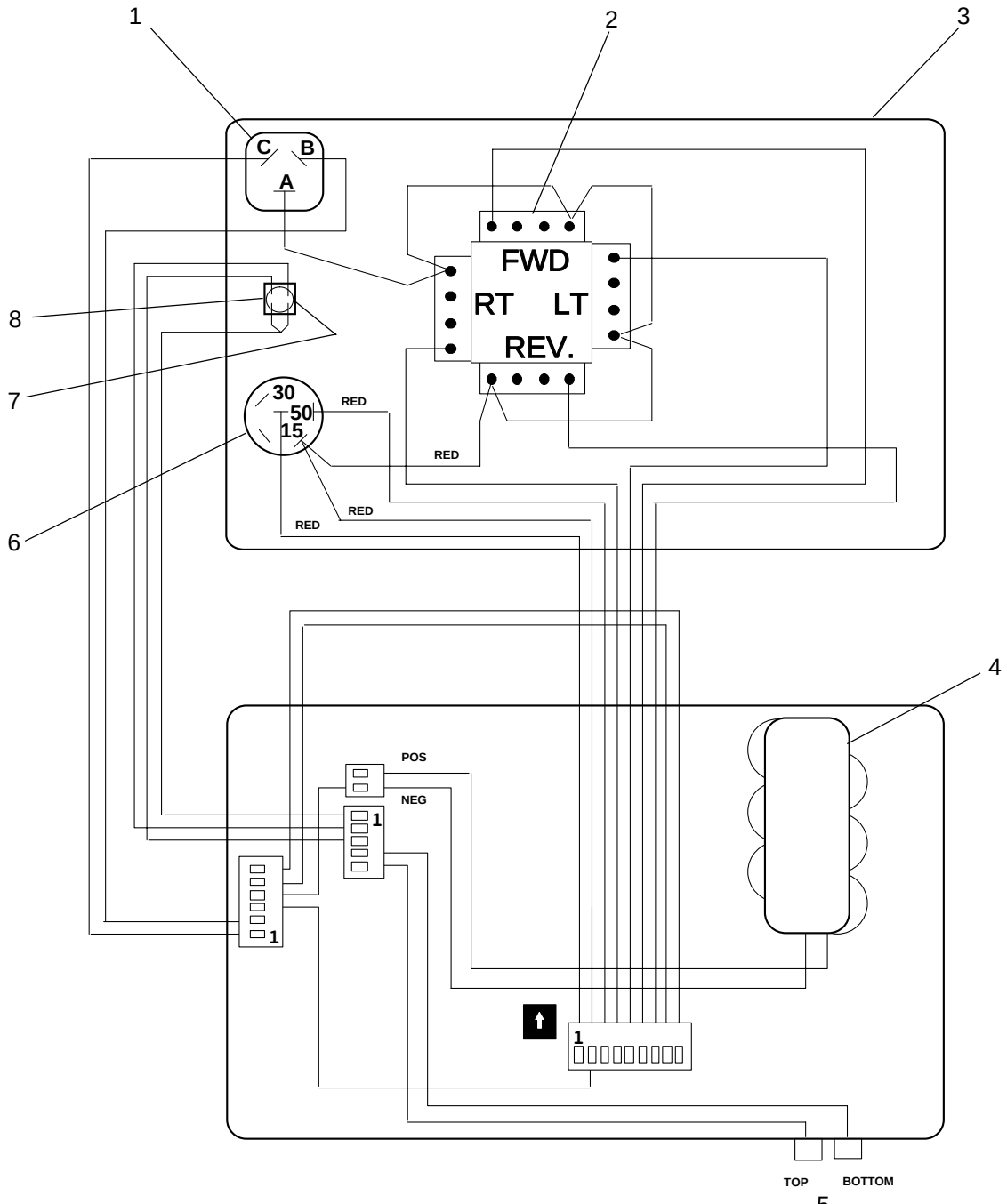

1 EXCITER SWITCH
2 JOYSTICK
3 TRANSMITTER COVER
4 BATTERY PACK
5 POWER ADAPTER PACKS
6 KEY SWITCH
7 GREEN LED
8 RED LED

1022SD52

8.8 Schematic - Cord Operated System

(S/N 6800 00000 & Below)

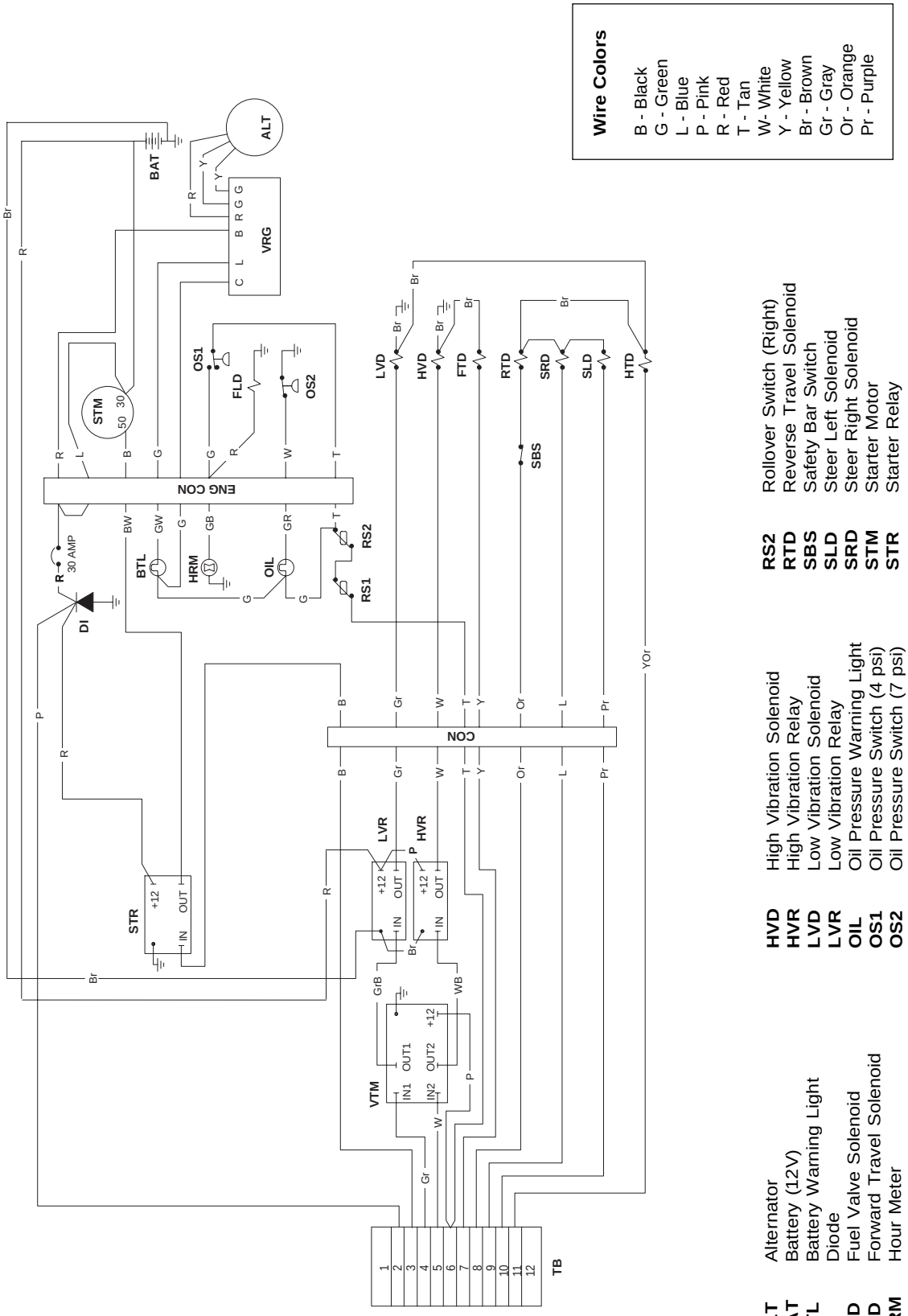

ALT Alternator
BAT Battery (12V)
BTL Battery Warning Light
DI Diode
FLD Fuel Valve Solenoid
FTD Forward Travel Solenoid
HRM Hour Meter
HTD High Speed Travel Solenoid

HVD High Vibration Solenoid
HVR High Vibration Relay
LVD Low Vibration Solenoid
LVR Low Vibration Relay
OIL Oil Pressure Warning Light
OS1 Oil Pressure Switch (4 psi)
OS2 Oil Pressure Switch (7 psi)
RS1 Rollover Switch (Left)

RS2 Rollover Switch (Right)
RTD Reverse Travel Solenoid
SBS Safety Bar Switch
SLD Steer Left Solenoid
SRD Steer Right Solenoid
STM Starter Motor
STR Starter Relay
VTM Vibration Timer

1002SD58

8.9 Schematic - Infra-red & Cord Operated System

(S/N 6800 00000 & Below)

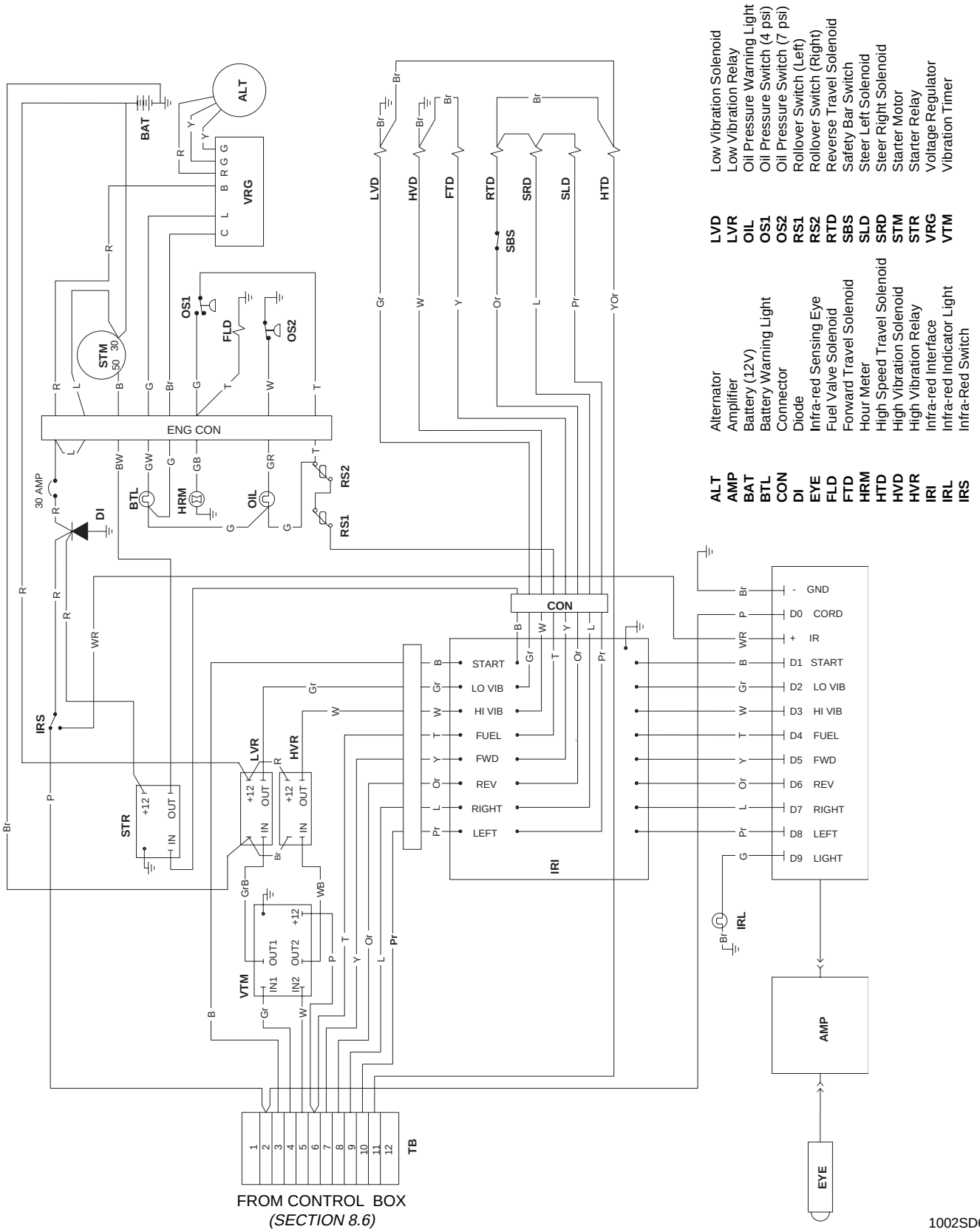

ALT	Alternator	LVD	Low Vibration Solenoid
AMP	Amplifier	LVR	Low Vibration Relay
BAT	Battery (12V)	OIL	Oil Pressure Warning Light
BTL	Battery Warning Light	OS1	Oil Pressure Switch (4 psi)
CON	Connector	OS2	Oil Pressure Switch (7 psi)
DI	Diode	RS1	Rollover Switch (Left)
EYE	Infra-red Sensing Eye	RS2	Rollover Switch (Right)
FLD	Fuel Valve Solenoid	RTD	Reverse Travel Solenoid
FTD	Forward Travel Solenoid	SBS	Safety Bar Switch
HRM	Hour Meter	SLD	Steer Left Solenoid
HTD	High Speed Travel Solenoid	SRD	Steer Right Solenoid
HVD	High Vibration Solenoid	STM	Starter Motor
HVR	High Vibration Relay	STR	Starter Relay
IRI	Infra-red Interface	VRG	Voltage Regulator
IRL	Infra-red Indicator Light	VTM	Vibration Timer
IRS	Infra-Red Switch		

1002SD66

8.10 Schematic - Cord Operated Control Box

(S/N 7100 00000 & Above)

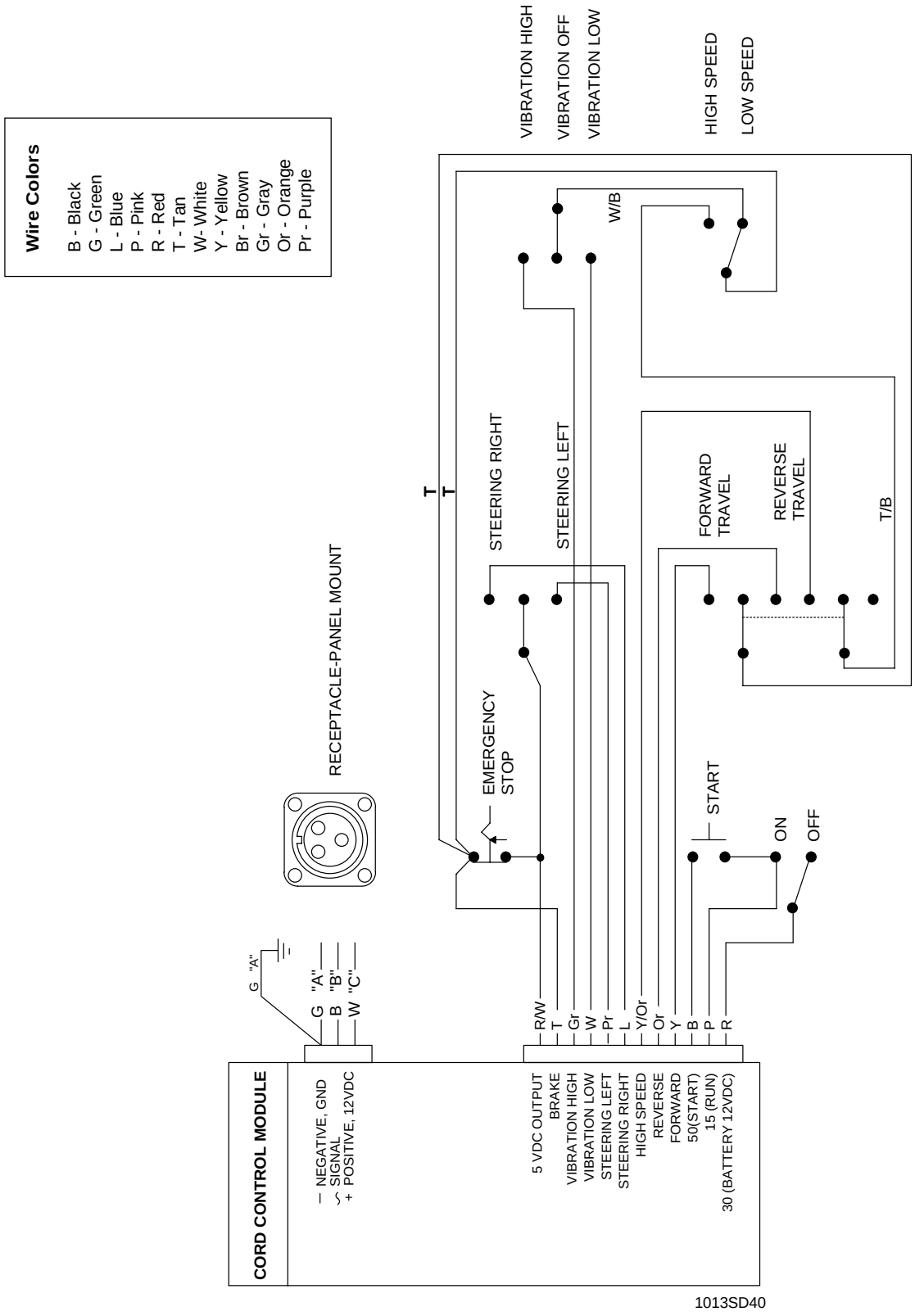

8.11 Schematic - Infra-red Transmitter

(S/N 7100 00000 & Above)

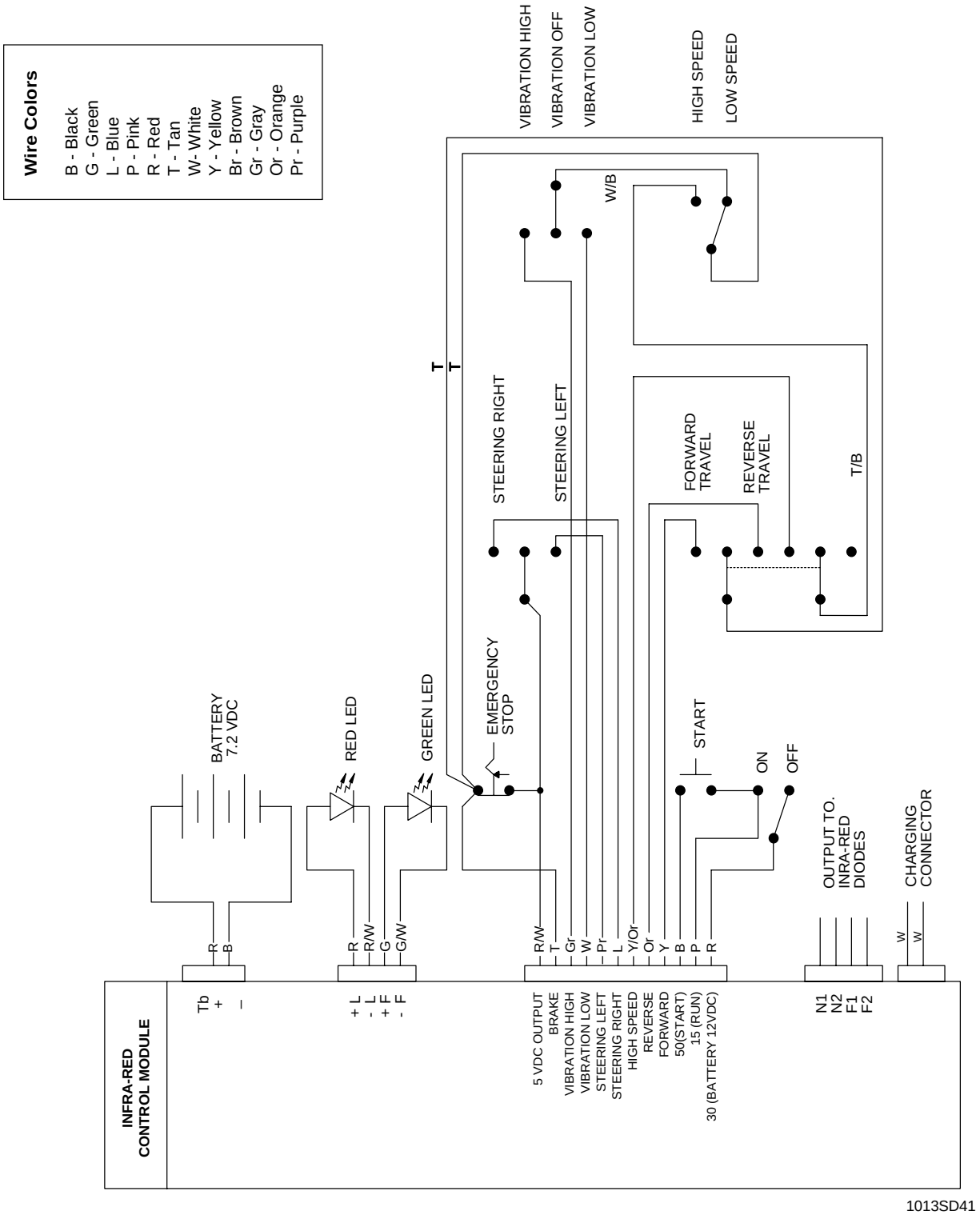

1013SD41

8.12 Schematic - Machine Wiring

(S/N 7100 00000 & Above)

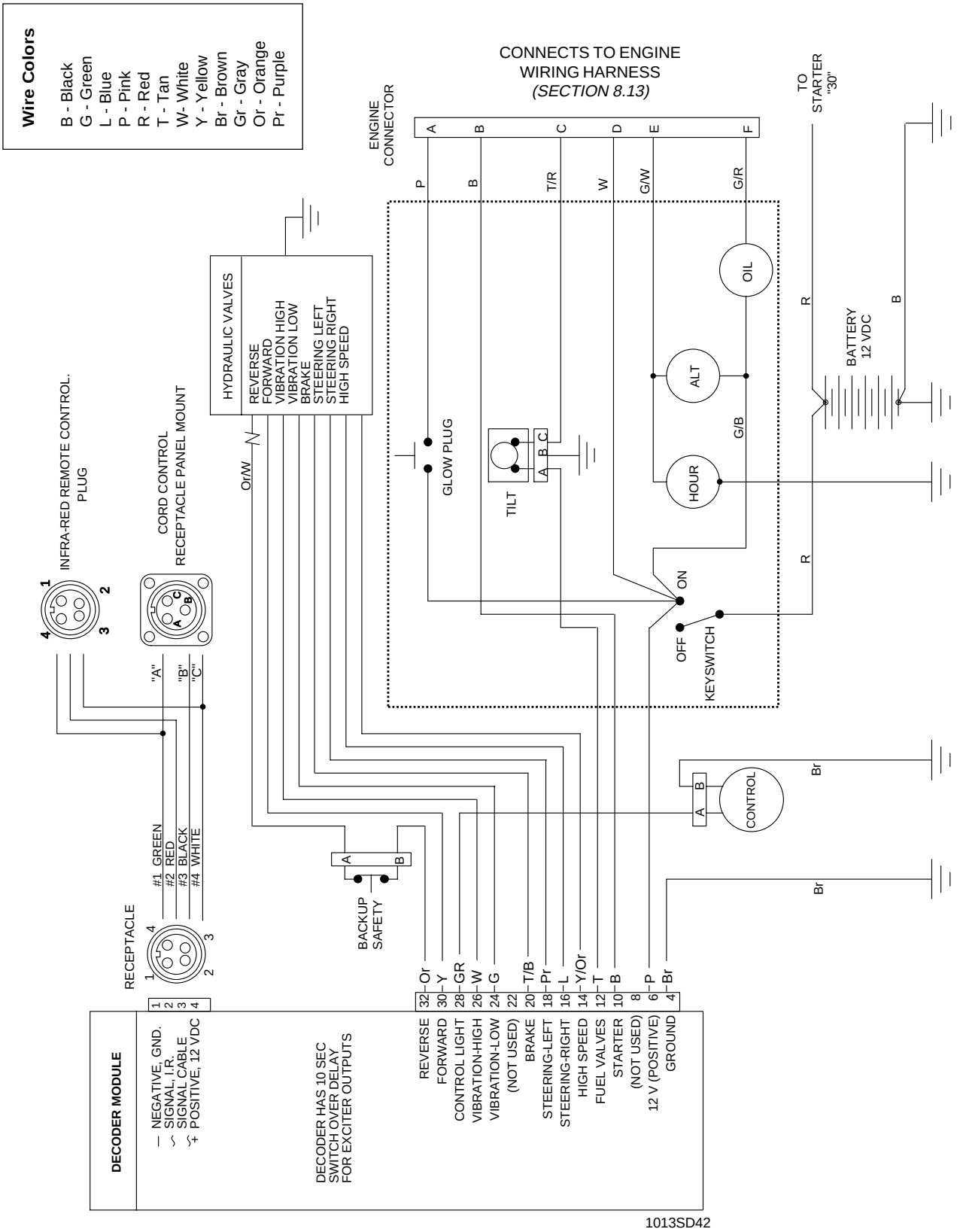

8.13 Schematic - Engine Wiring

(S/N 7100 00000 & Above)

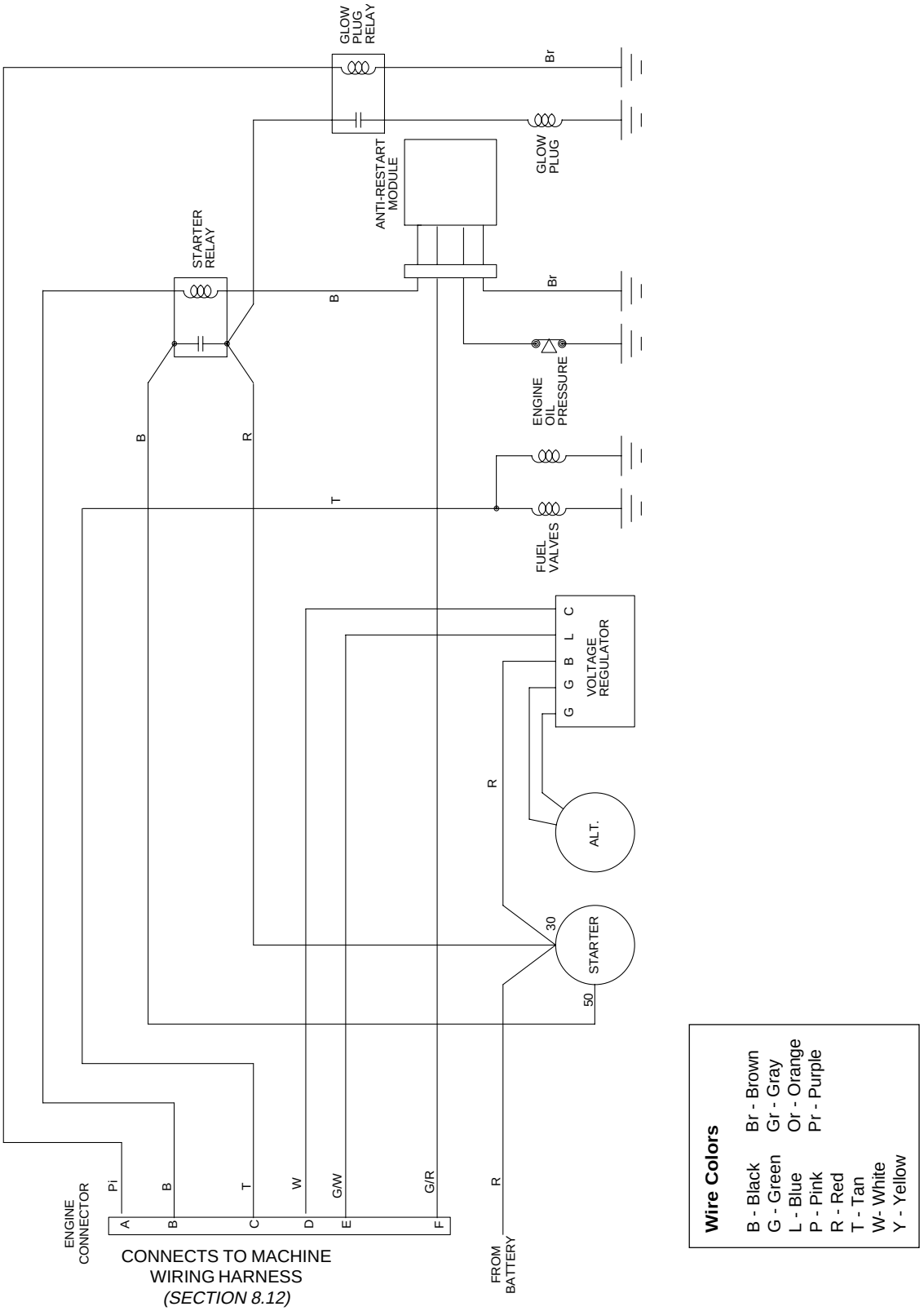

1013SD43

Use Of Threadlockers and Sealants

Threadlocking adhesives and sealants are specified throughout this manual and should be used where indicated. Threadlocking compounds normally break down at temperatures above 350° F (175° C). If a screw or bolt is hard to remove, heat it using a small propane torch to break down sealant. When applying sealants, follow instructions on container. The sealants listed below are recommended for use on WACKER equipment.

TYPE ( ) = Europe	COLOR	USAGE	PART NO. - SIZE
Loctite 222 Hernon 420 Omnifit 1150 (50M)	Purple	Low strength, for locking threads smaller than 1/4" (6 mm). Hand tool removable. Temp. range, -65 to 300 degrees F (-54 to 149 degrees C)	73287 - 10 ml
Loctite 243 Hernon 423 Omnifit 1350 (100M)	Blue	Medium strength, for locking threads larger than 1/4" (6 mm). Hand tool removable. Temp. range, -65 to 300 degrees F (-54 to 149 degrees C)	29311 - .5 ml 17380 - 50 ml
Loctite 271 / 277 Hernon 427 Omnifit 1550 (220M)	Red	High strength, for all threads up to 1" (25 mm). Heat parts before disassembly. Temp. range, -65 to 300 degrees F (-54 to 149 degrees C)	29312 - .5 ml 26685 - 10 ml 73285 - 50 ml
Loctite 290 Hernon 431 Omnifit 1710 (230LL)	Green	Medium to high strength, for locking preassembled threads and for sealing weld porosity (wicking). Gaps up to 0.005" (0.13 mm) Temp. range, -65 to 300 degrees F (-54 to 149 degrees C)	28824 - .5 ml 25316 - 10 ml
Loctite 609 Hernon 822 Omnifit 1730 (230L)	Green	Medium strength retaining compound for slip or press fit of shafts, bearings, gears, pulleys, etc. Gaps up to 0.005" (0.13 mm) Temp. range, -65 to 300 degrees F (-54 to 149 degrees C)	29314 - .5 ml
Loctite 545 Hernon 947 Omnifit 1150 (50M)	Brown	Hydraulic sealant Temp. range, -65 to 300 degrees F (-54 to 149 degrees C)	79356 - 50 ml
Loctite 592 Hernon 920 Omnifit 790	White	Pipe sealant with Teflon for moderate pressures. Temp. range, -65 to 300 degrees F (-54 to 149 degrees C)	26695 - 6 ml 73289 - 50 ml
Loctite 515 Hernon 910 Omnifit 10	Purple	Form-in-place gasket for flexible joints. Fills gaps up to 0.05" (1.3 mm) Temp. range, -65 to 300 degrees F (-54 to 149 degrees C)	70735 - 50 ml
Loctite 496 Hernon 110 Omnifit Sicomet 7000	Clear	Instant adhesive for bonding rubber, metal and plastics; general purpose. For gaps up to 0.006" (0.15 mm) Read caution instructions before using. Temp. range, -65 to 180 degrees F (-54 to 82 degrees C)	52676 - 1 oz.
Loctite Primer T Hernon Primer 10 Omnifit VC Activator	Aerosol Spray	Fast curing primer for threadlocking, retaining and sealing compounds. Must be used with stainless steel hardware. Recommended for use with gasket sealants.	2006124 - 6 oz.

TORQUE VALUES

Metric Fasteners (DIN)

	TORQUE VALUES (Based on Bolt Size and Hardness)						**WRENCH SIZE**			
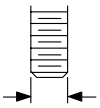			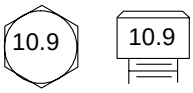		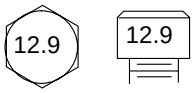		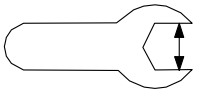			
Size	Ft.Lb.	Nm	Ft.Lb.	Nm	Ft.Lbs.	Nm	Inch	Metric	Inch	Metric
M3	*11	1.2	*14	1.6	*19	2.1	7/32	5.5	-	2.5
M4	*26	2.9	*36	4.1	*43	4.9	9/32	7	-	3
M5	*53	6.0	6	8.5	7	10	5/16	8	-	4
M6	7	10	10	14	13	17	-	10	-	5
M8	18	25	26	35	30	41	1/2	13	-	6
M10	36	49	51	69	61	83	11/16	17	-	8
M12	63	86	88	120	107	145	3/4	19	-	10
M14	99	135	140	190	169	230	7/8	22	-	12
M16	155	210	217	295	262	355	15/16	24	-	14
M18	214	290	298	405	357	485	1-1/16	27	-	14
M20	302	410	427	580	508	690	1-1/4	30	-	17

Inch Fasteners (SAE)

	 SAE 5		 SAE 8		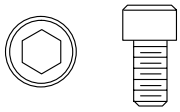		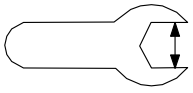			
Size	Ft.Lb.	Nm	Ft.Lb.	Nm	Ft.Lbs.	Nm	Inch	Metric	Inch	Metric
No.4	*6	0.7	*14	1.0	*12	1.4	1/4	5.5	3/32	-
No.6	*12	1.4	*17	1.9	*21	2.4	5/16	8	7/64	-
No.8	*22	2.5	*31	3.5	*42	4.7	11/32	9	9/64	-
No.10	*32	3.6	*45	5.1	*60	6.8	3/8	-	5/32	-
1/4	6	8.1	9	12	12	16	7/16	-	3/32	-
5/16	13	18	19	26	24	33	1/2	13	1/4	-
3/8	23	31	33	45	43	58	9/16	-	5/16	-
7/16	37	50	52	71	69	94	5/8	16	3/8	-
1/2	57	77	80	109	105	142	3/4	19	3/8	-
9/16	82	111	115	156	158	214	13/16	-	-	-
5/8	112	152	159	216	195	265	15/16	24	1/2	-
3/4	200	271	282	383	353	479	1-1/8	-	5/8	-

1 Ft.Lb. = 1.357 Nm

* = In.Lb.

1 Inch = 25.4 mm

Wacker Construction Equipment AG · Preußenstraße 41 · D-80809 München · Tel.: +49-(0)89-354 02 - 0 · Fax: +49 - (0)89-354 02-390
Wacker Corporation · P.O. Box 9007 · Menomonee Falls, WI 53052-9007 · Tel. : +1-(1)(262) 255-0500 · Fax: +1-(1)(262) 255-0550 · Tel. : (800) 770-0957
Wacker Asia Pacific Operations · Sunley Center, Unit 912, 9/F · 9 Wing Qin Street, Kwai Chung, N.T. · Hong Kong · Tel. + 852 2406 60 32 · Fax: + 852 2406 60 21